FOREWORD

This manual contains maintenance and repair procedures for the 1989 MR2.

Applicable model: AW11 series

The manual is divided into 21 sections and 4 appendixes with a thumb index for each section at the edge of the pages.

Please note that the publications below have also been prepared as relevant service manuals to the components and systems in this vehicle.

Manual Name	Pub. No.
• 1989 MR2 Electrical Wiring Diagram Manual	EWD056U
• TCCS (4A-GE) Diagnosis Manual	36903A
• ECT (A240E) Diagnosis Manual	DM010U
• MR2 Collision Damaged Body Repair Manual	36440A
• 1989 model New Car Features	NCF046U

All information in this manual is based on the latest product information at the time of publication. However, specifications and procedures are subject to change without notice.

TOYOTA MOTOR CORPORATION

1989 TOYOTA MR2 REPAIR MANUAL

INTRODUCTION IN
MAINTENANCE MA
ENGINE MECHANICAL EM
SUPERCHARGER SYSTEM SC
EMISSION CONTROL SYSTEMS EC
EFI SYSTEM FI
COOLING SYSTEM CO
LUBRICATION SYSTEM LU
IGNITION SYSTEM IG
STARTING SYSTEM ST
CHARGING SYSTEM CH
CLUTCH CL
MANUAL TRANSAXLE MT
AUTOMATIC TRANSAXLE AT
FRONT AXLE AND SUSPENSION FA
REAR AXLE AND SUSPENSION RA
BRAKE SYSTEM BR
STEERING SR
BODY ELECTRICAL SYSTEM BE
BODY BO
AIR CONDITIONING SYSTEM AC
SERVICE SPECIFICATIONS A
STANDARD BOLT TORQUE SPECIFICATIONS B
SST AND SSM C
ELECTRICAL WIRING DIAGRAMS D

INTRODUCTION

	Page
HOW TO USE THIS MANUAL	IN-2
IDENTIFICATION INFORMATION	IN-4
GENERAL REPAIR INSTRUCTIONS	IN-4
PRECAUTIONS FOR VEHICLES EQUIPPED WITH A CATALYTIC CONVERTER	IN-6
PRECAUTIONS FOR VEHICLES WITH AN AUDIO SYSTEM WITH BUILT-IN ANTI-THEFT SYSTEM	IN-7
VEHICLE LIFT AND SUPPORT LOCATIONS	IN-8
ABBREVIATIONS USED IN THIS MANUAL	IN-9

HOW TO USE THIS MANUAL

To assist you in finding your way through the manual, the Section Title and major heading are given at the top of every page.

An **INDEX** is provided on the first page of each section to guide you to the item to be repaired.

At the beginning of each section, **PRECAUTIONS** are given that pertain to *all* repair operations contained in that section. *Read these precautions before starting any repair task.*

TROUBLESHOOTING tables are included for each system to help you diagnose the problem and find the cause. The repair for each possible cause is referenced in the remedy column to quickly lead you to the solution.

REPAIR PROCEDURES

Most repair operations begin with an overview illustration. It identifies the components and shows how the parts fit together.

Example:

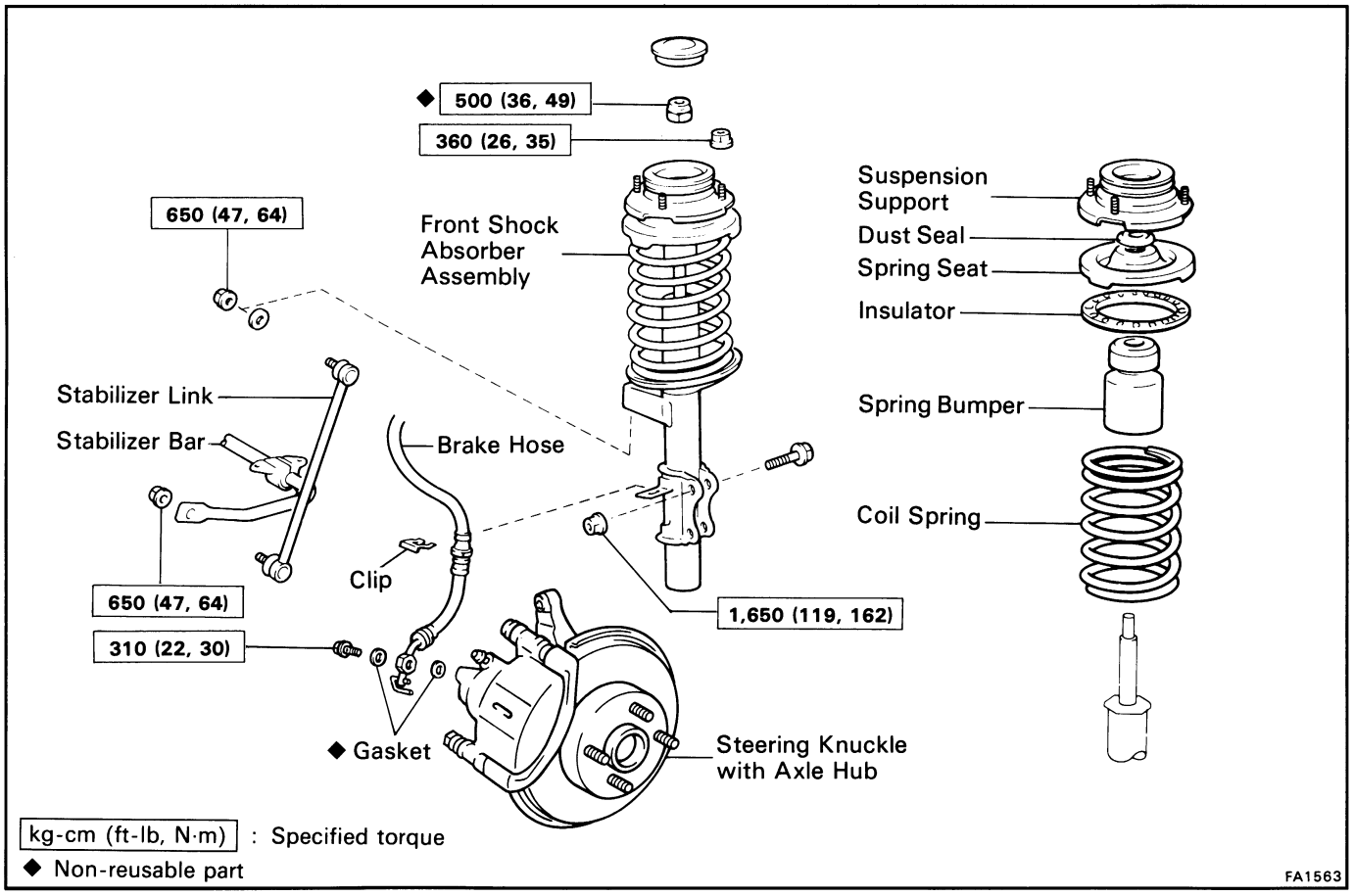

The procedures are presented in a step-by-step format:

- The illustration shows *what* to do and *where* to do it.
- The task heading tells *what* to do.
- The detailed text tells *how* to perform the task and gives other information such as specifications and warnings.

Example:

Task heading: what to do

Illustration: what to do and where

21. CHECK PISTON STROKE OF OVERDRIVE BRAKE

(a) Place SST and a dial indicator onto the overdrive brake piston as shown in the figure.

SST 09350-30020 (09350-06120)

Set part No. *Component part No.*

Detailed text: how to do task

(b) Measure the stroke applying and releasing the compressed air (4 – 8 kg/cm^2, 57 – 114 psi or 392 – 785 kPa) as shown in the figure.

Piston stroke: 1.40 – 1.70 mm (0.0551 – 0.0669 in.)

Specification

This format provides the experienced technician with a FAST TRACK to the information needed. The upper case task heading can be read at a glance when necessary, and the text below it provides detailed information. Important specifications and warnings always stand out in bold type.

REFERENCES

References have been kept to a minimum. However, when they are required you are given the page to refer to.

SPECIFICATIONS

Specifications are presented in bold type throughout the text where needed. You never have to leave the procedure to look up your specifications. They are also found in Appendix A, for quick reference.

WARNINGS, CAUTIONS, NOTES:

- WARNINGS are presented in bold type, and indicate there is a possibility of injury to you or other people.
- CAUTIONS are also presented in bold type, and indicate the possibility of damage to the components being repaired.
- NOTES are separated from the text but do not appear in bold. They provide additional information to help you efficiently perform the repair.

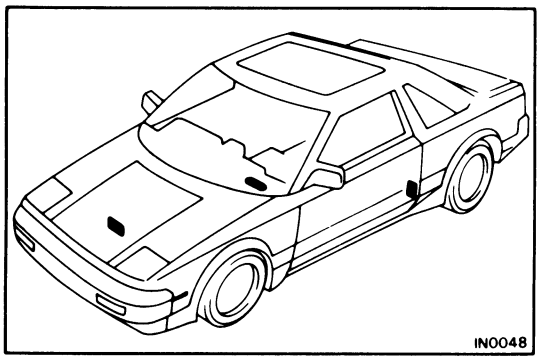

IDENTIFICATION INFORMATION

VEHICLE IDENTIFICATION NUMBER

The vehicle identification number is stamped on the front luggage end panel of the front luggage compartment.

This number is also stamped on top of the instrument panel and the driver's door.

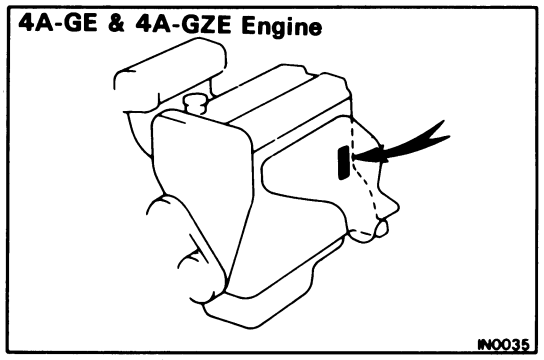

ENGINE SERIAL NUMBER

The engine serial number is stamped on the cylinder block as shown.

GENERAL REPAIR INSTRUCTIONS

1. Use fender seat and floor covers to keep the vehicle clean and prevent damage.
2. During disassembly, keep parts in the appropriate order to facilitate reassembly.
3. Observe the following:
   (a) Before performing electrical work, disconnect the negative cable from the battery terminal.
   (b) If it is necessary to disconnect the battery for inspection or repair, always disconnect the cable from the negative (−) terminal which is grounded to the vehicle body.
   (c) To prevent damage to the battery terminal post, loosen the terminal nut and raise the cable straight up without twisting or prying it.
   (d) Clean the battery terminal posts and cable terminals with a shop rag. Do not scrape them with a file or other abrasive object.
   (e) Install the cable terminal to the battery post with the nut loose, and tighten the nut after installation. Do not use a hammer or such to tap the terminal onto the post.
   (f) Be sure the cover for the positive (+) terminal is properly in place.
4. Check hose and wiring connectors to make sure that they are secure and correct.
5. Non-reusable parts
   (a) Always replace cotter pins, gaskets, O-rings and oil seals etc. with new ones.
   (b) Non-reusable parts are indicated in the component illustrations by the "◆" symbol.

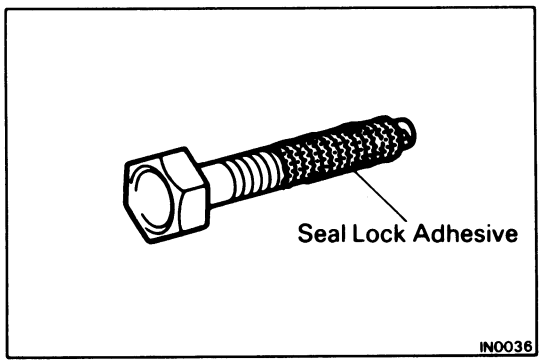

6. Precoated parts

   Precoated parts are bolts and nuts, etc. that are coated with a seal lock adhesive at the factory.

   (a) If a precoated part is retightened, loosened or caused to move in any way, it must be recoated with the specified adhesive.

   (b) Recoating of precoated parts

      (1) Clean off the old adhesive from the bolt, nut or threads.

      (2) Dry with compressed air.

      (3) Apply the specified seal lock adhesive to the bolt or nut threads.

   (c) Precoated parts are indicated in the component illustrations by the "★" symbol.

7. When necessary, use a sealer on gaskets to prevent leaks.

8. Carefully observe all specifications for bolt tightening torques. Always use a torque wrench.

9. Use of special service tools (SST) and special service materials (SSM) may be required, depending on the nature of the repair. Be sure to use SST and SSM where specified and follow the proper work procedure. A list of SST and SSM can be found at the back of this manual.

10. When replacing fuses, be sure the new fuse has the correct amperage rating. DO NOT exceed the rating or use one with a lower rating.

11. Care must be taken when jacking up and supporting the vehicle. Be sure to lift and support the vehicle at the proper locations (See page IN-8).

    (a) If the vehicle is to be jacked up only at the front or rear end, be sure to block the wheels at the opposite end in order to ensure safety.

    (b) After the vehicle is jacked up, be sure to support it on stands. It is extremely dangerous to do any work on a vehicle raised on a jack alone, even for a small job that can be finished quickly.

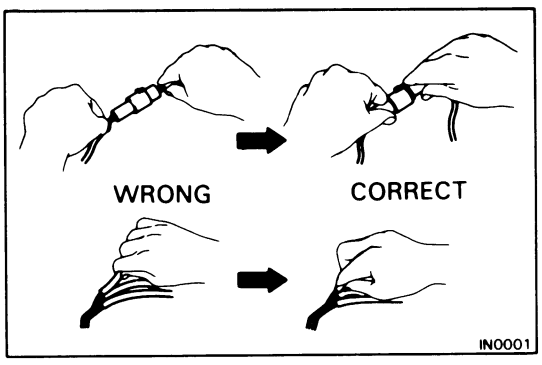

12. Observe the following precautions to avoid damage to the parts:

    (a) Do not open the cover or case of the ECU unless absolutely necessary. (If the IC terminals are touched, the IC may be destroyed by static electricity.)

    (b) To disconnect vacuum hoses, pull on the end, not the middle of the hose.

    (c) To pull apart electrical connectors, pull on the connector itself, not the wires.

    (d) Be careful not to drop electrical components, such as sensors or relays. If they are dropped on a hard floor, they should be replaced and not reused.

(e) When steam cleaning an engine, protect the distributor, coil and air filter from water.

(f) Never use an impact wrench to remove or install temperature switches or temperature sensors.

(g) When checking continuity at the wire connector, insert the tester probe carefully to prevent terminals from bending.

(h) When using a vacuum gauge, never force the hose onto a connector that is too large. Use a step-down adapter instead. Once the hose has been stretched, it may leak.

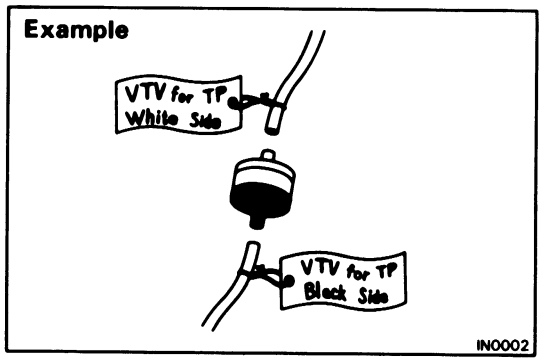

13. Tag hoses before disconnecting them:

(a) When disconnecting vacuum hoses, use tags to identify how they should be reconnected.

(b) After completing a job, double check that the vacuum hoses are properly connected. A label under the hood shows the proper layout.

PRECAUTIONS FOR VEHICLES EQUIPPED WITH A CATALYTIC CONVERTER

WARNING: If large amounts of unburned gasoline flow into the converter, it may overheat and create a fire hazard. To prevent this, observe the following precautions and explain them to your customer.

1. **Use only unleaded gasoline.**

2. **Avoid prolonged idling.**

   Avoid running the engine at idle speed for more than 20 minutes.

3. **Avoid spark jump test.**

   (a) Spark jump test only when absolutely necessary. Perform this test as rapidly as possible.

   (b) While testing, never race the engine.

4. **Avoid prolonged engine compression measurement.**

   Engine compression tests must be made as rapidly as possible.

5. **Do not run engine when fuel tank is nearly empty.**

   This may cause the engine to misfire and create an extra load on the converter.

6. **Avoid coasting with ignition turned off and prolonged braking.**

7. **Do not dispose of used catalyst along with parts contaminated with gasoline or oil.**

PRECAUTIONS FOR VEHICLES WITH AN AUDIO SYSTEM WITH BUILT-IN ANTI-THEFT SYSTEM

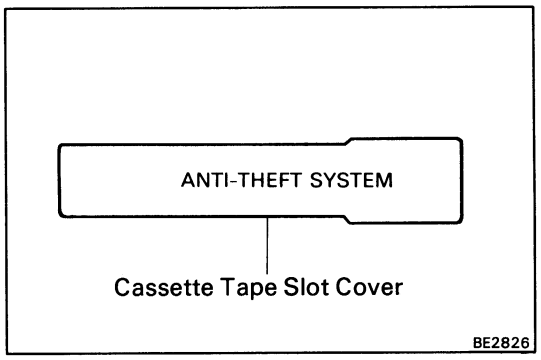

The Audio System with acoustic flavor only for U.S.A. specification vehicles shown on the left has a built-in anti-theft system which makes the audio system sound-less if stolen.
If the power source for the audio system is cut even once, the anti-theft system operates so that even if the power source is reconnected, the audio system will not produce any sound unless the ID number selected by the customer is input again.
Accordingly, when performing repairs on vehicles equipped with this system, before disconnecting the battery terminals or removing the audio system the customer should be asked for the ID number so that the technician can input the ID number afterwards, or else a request made to the customer to input the ID number.
For the method to input the ID number or cancel the anti-theft system, refer to the Owner's Manual.

VEHICLE LIFT AND SUPPORT LOCATIONS

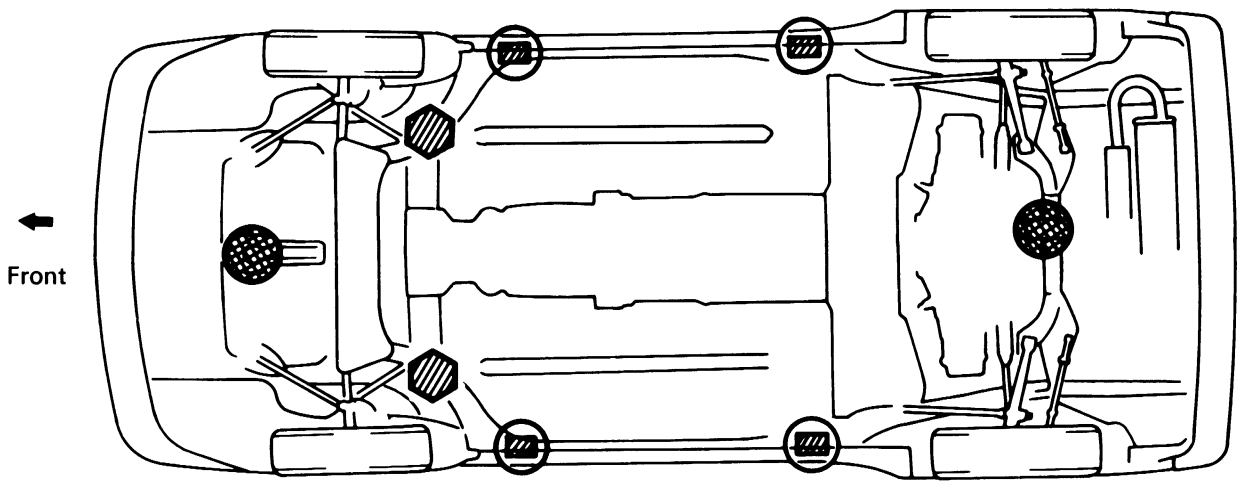

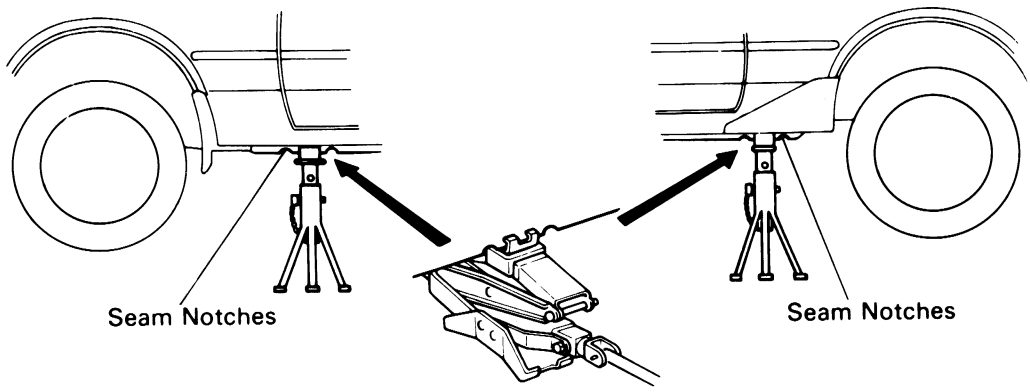

JACK POSITION

Front ..... Jack up support of front luggage pan
Rear ..... Rear engine mounting

PANTOGRAPH JACK POSITION

SUPPORT POSITION

Safety stand .....

NOTE: If the arms of the swing arm lift cannot be positioned as shown by the rectangles above, position them under the floor pan reinforcements shown by the hexagons.

IN0047
IN0034

ABBREVIATIONS USED IN THIS MANUAL

ABV	Air By-pass Valve
A/C	Air Conditioner
A/T	Automatic Transaxle
B_1	Second Coast Brake
B_2	Second Brake
B_3	First and Reverse Brake
B_4	Underdrive Brake
BTDC	Before Top Dead Center
BVSV	Bimetal Vacuum Switching Valve
C_1	Forward Clutch
C_2	Direct Clutch
C_3	Underdrive Clutch
Calif.	Vehicles Sold in California
CB or C/B	Circuit Breaker
CRS	Child Restraint System
DP	Dash Pot
ECT	Electronic Controlled Transaxle
ECU	Electronic Controlled Unit
EFI	Electronic Fuel Injection
E/G	Engine
EGR	Exhaust Gas Recirculation
ELR	Emergency Locking Retractor
ESA	Electronic Spark Advance
EVAP	Evaporative (Emission Control)
EX	Exhaust (Manifold, Valve)
Ex.	Except
F_1	No. 1 One-way Clutch
F_2	No. 2 One-way Clutch
F_3	Underdrive One-way Clutch
FIPG	Formed in Place Gasket
FL	Fusible Link
FPU	Fuel Pressure Up
IG	Ignition
IN	Intake (Manifold, Valve)
ISC	Idle Speed Control
LH	Left-hand
Max.	Maximum
Min.	Minimum
MP	Multipurpose
M/T	Manual Transaxle
N	Neutral
O/D	Overdrive
O/S	Oversize
PCV	Positive Crankcase Ventilation
PS	Power Steering
RH	Right-hand
SSM	Special Service Materials
SST	Special Service Tools
STD	Standard
SW	Switch
TCCS	TOYOTA Computer Controlled System
TDC	Top Dead Center
TWC	Three-way Catalyst
UD	Underdrive
U/S	Undersize
VSV	Vacuum Switching Valve
VTV	Vacuum Transmitting Valve
w/	With
w/o	Without

MAINTENANCE

	Page
MAINTENANCE SCHEDULE	MA-2
MAINTENANCE OPERATIONS	MA-4
GENERAL MAINTENANCE	MA-12

GENERAL NOTES:

- Every service item in the periodic maintenance list must be performed.
- Failure to do even one item can cause the engine to run poorly and increase exhaust emissions.

MAINTENANCE SCHEDULE

Maintenance operations: A = Check and adjust if necessary;
R = Replace, change or lubricate;
I = Inspect and correct or replace if necessary

SCHEDULE A
CONDITION

- Towing a trailer, using a camper or car top carrier.
- Repeat short trips less than 5 miles (8 km) and outside temperatures remain below freezing.
- Extensive idling and/or low speed driving for a long distance such as police, taxi or door-to-door delivery use.
- Operating on dusty, rough, muddy or salt spread roads.

System	Service interval (Odometer reading or months, whichever comes first) / Maintenance items		Maintenance services beyond 60,000 miles (96,000 km) should be performed at the same intervals shown in each maintenance schedule.												See page (item No.)
		Miles x 1,000	5	10	15	20	25	30	35	40	45	50	55	60	
		Km x 1,000	8	16	24	32	40	48	56	64	72	80	88	96	
		Months	6	12	18	24	30	36	42	48	54	60	66	72	
ENGINE	Timing belt		R (1)												MA-4 (item 1)
	Valve clearance													A	MA-7 (item 13)
	Drive belts(2)													I	MA-4 (item 2)
	Engine oil and oil filter ★		R	R	R	R	R	R	R	R	R	R	R	R	MA-5 (item 6)
	Supercharger oil ★	4A-GZE						I						I	MA-5 (item 7)
	Engine coolant(3)													R	MA-6 (item 8)
	Exhaust pipes and mountings				I			I			I			I	MA-7 (item 12)
FUEL	Idle speed (4)	4A-GE		A				A						A	MA-7 (item 14)
	Air filter ★ (5)		I	I	I	I	I	R	I	I	I	I	I	R	MA-5 (item 4, 5)
	Fuel line and connections							I						I	MA-7 (item 11)
	Fuel tank cap gasket													R	MA-6 (item 10)
IGNITION	Spark plugs (Platinum tipped type)													R	MA-4 (item 3)
EVAP	Charcoal canister													I	MA-6 (item 9)
BRAKES	Brake pads and discs			I		I		I		I		I		I	MA-8 (item 16)
	Brake line pipes and hoses					I				I				I	MA-8 (item 15)
CHASSIS	Steering linkage			I		I		I		I		I		I	MA-8 (item 17)
	Ball joints and dust covers			I		I		I		I		I		I	MA-9 (item 19)
	Automatic transaxle, manual transaxle, differential and steering gear housing oil(7)					R				R				R	MA-9, 10 (item 21 or 22) MA-9 (item 18)
	Bolts and nuts on chassis and body(6)			I		I		I		I		I		I	MA-11 (item 23)

For vehicles sold in California, maintenance services indicated by a star (★) is required under the terms of the Emission Control Systems Warranty. See Owner's Guide for complete warranty information.

NOTE:
(1) For the vehicles frequently idled for extensive periods and/or driven for long distance at low speeds such as taxi, police and door-to-door delivery, it is recommended to change at 60,000 miles (96,000 km).
(2) After 60,000 miles (96,000 km) or 72 months, inspect every 10,000 miles (16,000 km) or 12 months.
(3) After 60,000 miles (96,000 km) or 72 months, replace every 30,000 miles (48,000 km) or 36 months.
(4) After 60,000 miles (96,000 km) or 72 months, adjust every 30,000 miles (48,000 km) or 36 months.
(5) Applicable when operating mainly on dusty roads. If not, follow the schedule B.
(6) Applicable when operating mainly on rough and/or muddy roads. If not, follow the schedule B.
(7) Inspect the steering gear housing for oil leakage only.

SCHEDULE B
CONDITION

Conditions other than those listed for SCHEDULE A.

System	Service interval (Odometer reading or months, whichever comes first) / Maintenance items		Maintenance services beyond 60,000 miles (96,000 km) should be performed at the same intervals shown in each maintenance schedule.						See page (item No.)
		Miles x 1,000	10	20	30	40	50	60	
		Km x 1,000	16	32	48	64	80	96	
		Months	12	24	36	48	60	72	
ENGINE	Valve clearance							A	MA-7 (item 13)
	Drive belts(1)							I	MA-4 (item 2)
	Engine oil and oil filter ★		R	R	R	R	R	R	MA-5 (item 6)
	Supercharger oil ★	4A-GZE			I			I	MA-5 (item 7)
	Engine coolant(2)							R	MA-6 (item 8)
	Exhaust pipes and mountings				I			I	MA-7 (item 12)
FUEL	Idle speed (3)	4A-GE	A		A			A	MA-7 (item 14)
	Air filter ★				R			R	MA-5 (item 5)
	Fuel line and connections				I			I	MA-7 (item 11)
	Fuel tank cap gasket							R	MA-6 (item 10)
IGNITION	Spark plugs (Platinum tipped type)							R	MA-4 (item 3)
EVAP	Charcoal canister							I	MA-6 (item 9)
BRAKES	Brake pads and discs			I		I		I	MA-8 (item 16)
	Brake line pipes and hoses			I		I		I	MA-8 (item 15)
CHASSIS	Steering linkage			I		I		I	MA-8 (item 17)
	Ball joints and dust covers			I		I		I	MA-9 (item 19)
	Automatic transaxle, manual transaxle, differential and steering gear housing oil(4)			I		I		I	MA-9 (item 20) MA-9 (item 18)
	Bolts and nuts on chassis and body			I		I		I	MA-11 (item 23)

For vehicles sold in California, maintenance services indicated by a star (★) is required under the terms of the Emission Control Systems Warranty. See Owner's Guide or Warranty Booklet for complete warranty information.

NOTE:
(1) After 60,000 miles (96,000 km) or 72 months, inspect every 10,000 miles (16,000 km) or 12 months.
(2) After 60,000 miles (96,000 km) or 72 months, replace every 30,000 miles (48,000 km) or 36 months.
(3) After 60,000 miles (96,000 km) or 72 months, adjust every 30,000 miles (48,000 km) or 36 months.
(4) Inspect the steering gear housing for oil leakage only.

MAINTENANCE OPERATIONS

ENGINE

Cold Engine Operations

1. REPLACE TIMING BELT

(a) Remove the timing belt.
(See pages EM-15 to 17)

(b) Install the timing belt.
(See pages EM-22 to 25)

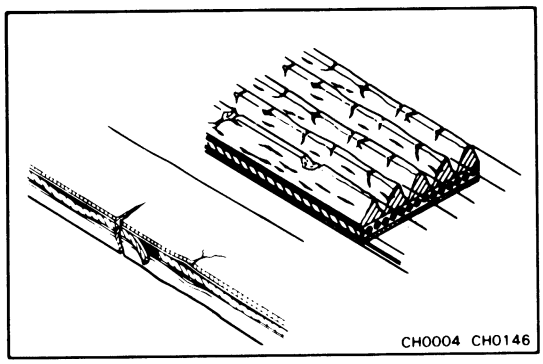

2. INSPECT DRIVE BELTS

(a) Visually check the belt for separation of the adhesive rubber above and below the core, core separation from the belt side, severed core, separation of the rib from the adhesive rubber, cracking or separation of the ribs, torn or worn ribs or cracks in the inner ridges of the ribs.

If necessary, replace the drive belt.

(b) Using a belt tension gauge, check the drive belt tension.

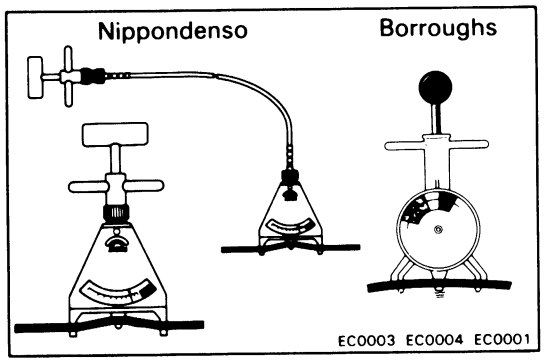

Belt tension gauge:
Nippondenso BTG-20 (95506-00020) or
Borroughs No. BT-33-73F

Drive belt tension:

4A-GE

Alternator		**New belt**	**175 ± 5 lb**
		Used belt	**115 ± 20 lb**
Air con.		**New belt**	**160 ± 20 lb**
		Used belt	**105 ± 10 lb**

4A-GZE

Alternator			
w/	**Air con.**	**New belt**	**165 ± 10 lb**
		Used belt	**85 ± 15 lb**
w/o	**Air con.**	**New belt**	**175 ± 5 lb**
		Used belt	**115 ± 20 lb**
Supercharger		**New belt**	**175 ± 5 lb**
		Used belt	**115 ± 20 lb**

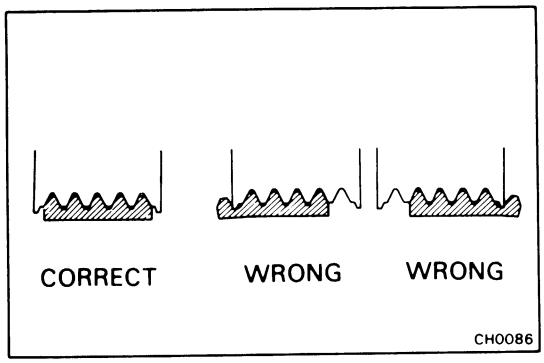

If necessary, adjust the drive belt tension.

NOTE:
- "New belt" refers to a belt which has been used less than 5 minutes on a running engine.
- "Used belt" refers to a belt which has been used on a running engine for 5 minutes or more.
- After replacing the drive belt, check that it fits properly in the ribbed grooves, especially in the places difficult to see.
- After installing a new belt, run the engine for about 5 minutes and then recheck the tension.

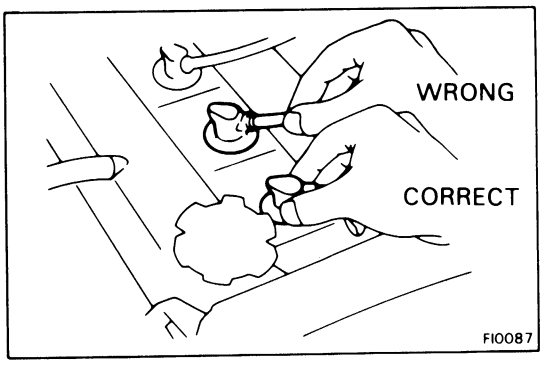

3. REPLACE SPARK PLUGS

(a) Disconnect the spark plug cords at the boot.
DO NOT pull on the cords.

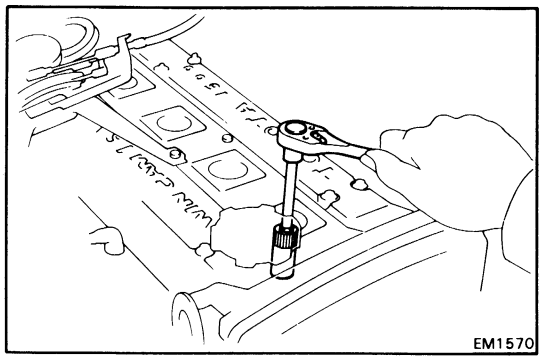

(b) Using plug wrench (16 mm), remove the spark plugs.

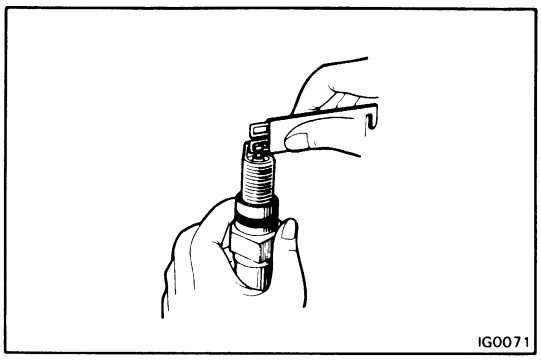

(c) Check the electrode gap of new spark plugs.

Correct electrode gap: 1.1 mm (0.043 in.)

Recommended spark plugs:

4A-GE	**ND**	**PQ16R**
	NGK	**BCPR5EP11**
4A-GZE	**ND**	**PQ20R**
	NGK	**BCPR6EP11**

NOTE: If adjusting the gap of a new plug, bend only the base of the ground electrode. Do not touch the tip. Never attempt to adjust the gap on a used plug.

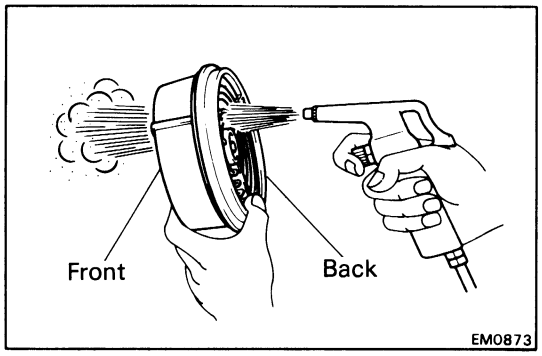

4. INSPECT AIR FILTER

(a) Visually check that the air cleaner element is not excessively dirty, damaged or oily.

(b) Clean the element with compressed air.
First blow from back side thoroughly. Then blow off the front side of the element.

5. REPLACE AIR FILTER

Replace the air cleaner element with a new one.

6. REPLACE ENGINE OIL AND FILTER
(See page LU-4)

Oil grade: API grade SF or SF/CC, multigrade viscosity and fuel-efficient oil

Engine oil capacity:
Drain and refill with oil filter change
w/o Oil cooler
3.3 liters (3.5 US qts, 2.9 Imp. qts)
w/ Oil cooler
3.4 liters (3.6 US qts, 3.0 Imp. qts)

7. INSPECT SUPERCHARGER OIL LEVEL
(See page SC-3)

Supercharger oil: Part No. 08885-80108 or equivalent

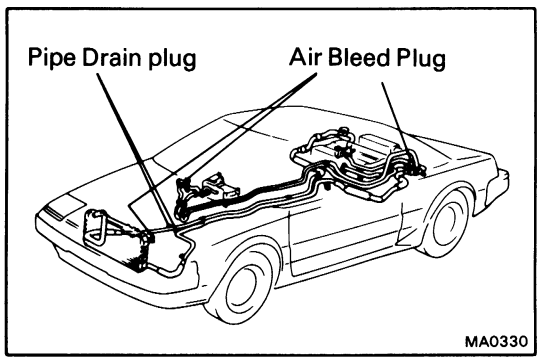

8. REPLACE ENGINE COOLANT
(See page CO-3)

(a) Open the air bleed plugs.

(b) Drain the coolant from the radiator, engine and pipe drain plugs.
(Engine drain is on the left next to the oil filter.)

(c) Close the drain plugs.

(d) Fill system with coolant.

(e) Close the air bleed plugs.

Coolant capacity:
12.4 liters (13.1 US qts, 10.9 Imp. qts)

Use a good brand of ethylene-glycol base coolant, mixed according to the manufacturer's instructions.

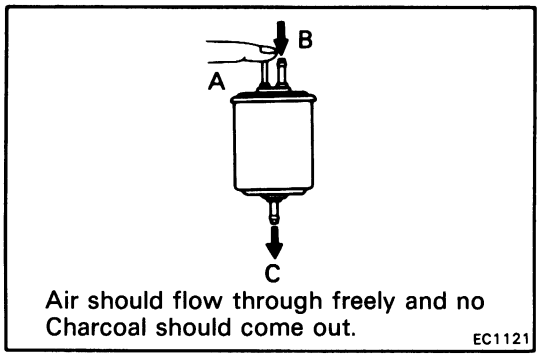

9. INSPECT CHARCOAL CANISTER

(a) Disconnect the hoses to the charcoal canister located below the air intake chamber. Label the hoses for correct installation.

(b) Plug pipe A with your finger and blow compressed air (3 kg/cm^2, 43 psi or 294 kPa) through pipe B (fuel tank side).

- Check that air comes out of the bottom pipe C without resistance.
- Check that no activated charcoal comes out.

If necessary, replace the charcoal canister.

NOTE: Do not attempt to wash the charcoal.

(c) Connect the hoses to the charcoal canister.

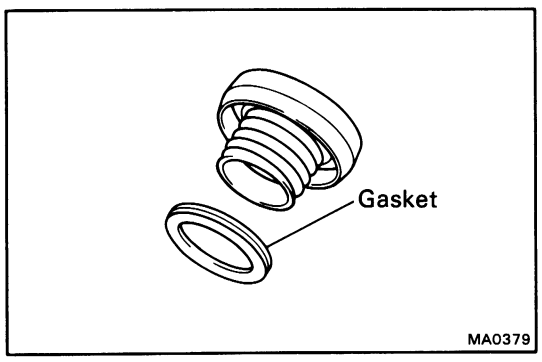

10. REPLACE GASKET IN FUEL TANK CAP

(a) Remove the old gasket (O-ring) from the fuel tank cap. Do not damage the cap.

(b) Install the new gasket by hand.

(c) Inspect the cap for damage or cracks.

(d) Install the cap and check the torque limiter.

11. INSPECT FUEL LINES AND CONNECTIONS

Visually inspect the fuel lines for cracks, leakage, loose connections, deformation or tank band looseness.

12. INSPECT EXHAUST PIPE AND MOUNTINGS

Visually inspect the pipes, hangers and connections for severe corrosion, leaks or damage.

13. ADJUST VALVE CLEARANCE

NOTE: Check and adjust the valve clearance while the engine is cold.

(a) Remove the valve covers.

(b) Measure and adjust valve clearance.
(See step 3 on page EM-7)

Valve clearance (cold):
Intake 0.15 – 0.25 mm (0.006 – 0.010 in.)
Exhaust 0.20 – 0.30 mm (0.008 – 0.012 in.)

(c) Reinstall the valve covers.

Hot Engine Operations

14. 4A-GE ENGINE ONLY: ADJUST IDLE SPEED

(a) Preparation
- Air cleaner installed
- All pipes and hoses of air intake system connected
- All vacuum lines connected (i.e., EVAP, EGR systems, etc.)
- EFI system wiring connectors fully plugged
- Engine at normal operating temperature
- Accessories switched off
- Transmission in "N" range

(b) Connect a tachometer to the engine.
(See page IG-2)

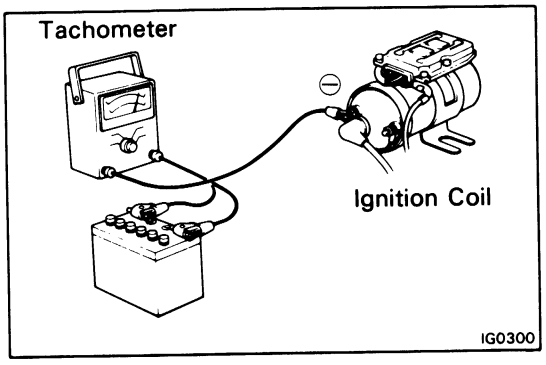

CAUTION:
- **NEVER allow the tachometer terminal to touch ground as it could result in damage to the igniter and/or ignition coil.**
- **As some tachometers are not compatible with this ignition system, we recommend that you confirm the compatibility of your unit before using.**

(c) Race the engine at 2,500 rpm for about 2 minutes.

(d) Set the idle speed by turning the IDLE SPEED ADJUSTING SCREW.

Idle speed: 800 rpm

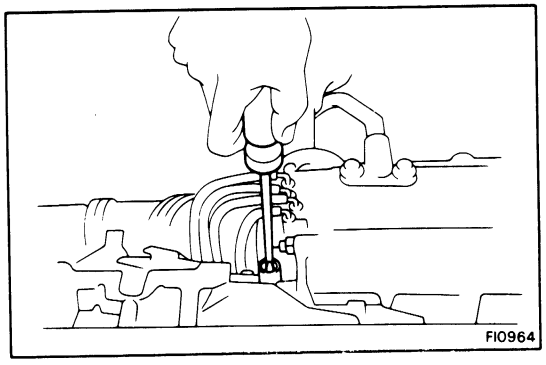

(e) Remove the tachometer.

NOTE: Make adjustments with the engine cooling fan off.

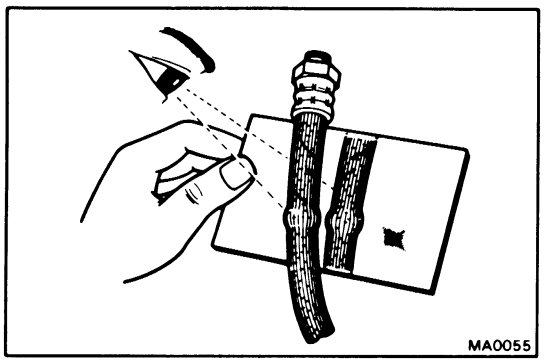

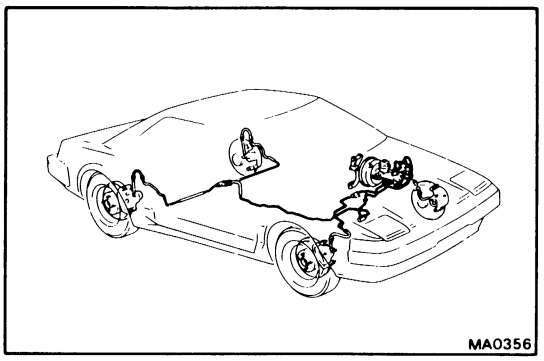

BRAKES

15. INSPECT BRAKE LINE PIPES AND HOSES

NOTE: Inspect in a well lighted area. Inspect the entire circumference and length of the brake hoses using a mirror as required. Turn the front wheels fully right or left before inspecting the front brake.

(a) Check all brake lines and hoses for:

- Damage
- Wear
- Deformation
- Cracks
- Corrosion
- Leaks
- Bends
- Twists

(b) Check all clamps for tightness and connections for leakage.

(c) Check that the hoses and lines are clear of sharp edges, moving parts and the exhaust system.

(d) Check that the lines installed in grommets, pass through the center of the grommets.

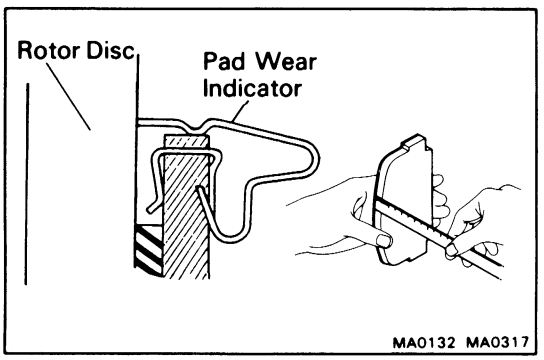

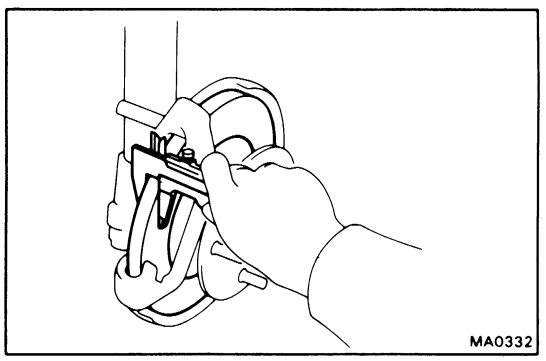

16. INSPECT FRONT AND REAR BRAKE PADS AND DISCS (Front: See page BR-23, Rear: See page BR-33)

(a) Check the thickness of the disc brake pads and check for irregular wear.

Minimum pad thickness:
Front 3.0 mm (0.118 in.)
Rear 1.0 mm (0.039 in.)

NOTE: If a squealing or scraping noise occurs from the front or rear brakes during driving, check the pad wear indicator. If there are traces of the indicator contacting the disc rotor, the disc pad should be replaced.

(b) Check the disc for wear or runout.

Minimum disc thickness:
Front 21.0 mm (0.827 in.)
Rear 9.0 mm (0.354 in.)

Maximum disc runout:
Front 0.13 mm (0.0051 in.)
Rear 0.15 mm (0.0059 in.)

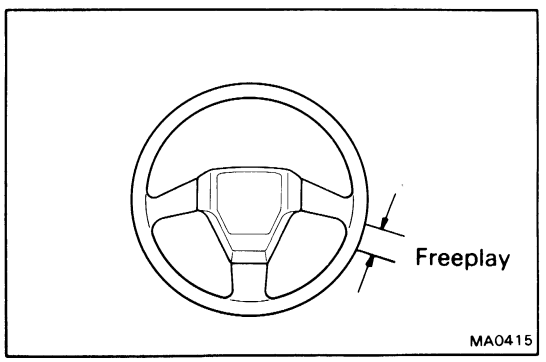

CHASSIS

17. INSPECT STEERING LINKAGE

(a) Check the steering wheel freeplay.

Maximum steering wheel freeplay: 30 mm (1.18 in.)

With the vehicle stopped and pointed straight ahead, rock the steering wheel gently back and forth with light finger pressure.

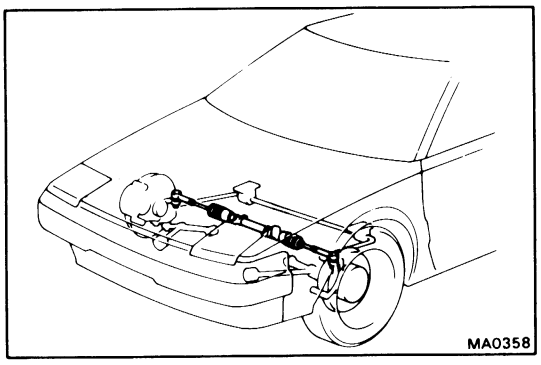

(b) Check the steering linkage for looseness and damage.

Check that:
- Tie rod ends do not have excessive play.
- Dust seals and boots are not damaged.
- Boot clamps are not loose.

18. INSPECT STEERING GEAR HOUSING OIL

Check the steering gear housing for oil leakage.

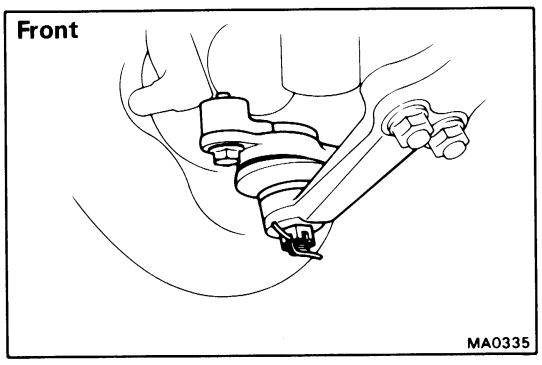

19. INSPECT BALL JOINTS AND DUST COVERS

(a) Inspect the ball joints for excessive looseness. (Front: See page FA-20, Rear: See pages RA-40)

Maximum ball joint vertical play: 0 mm (0 in.)

If excessive play is found, replace the ball joints.

(b) Inspect the dust cover for damage.

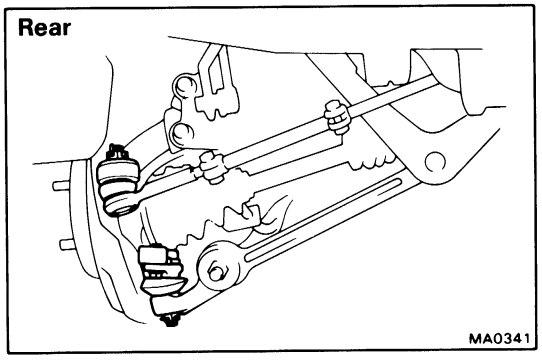

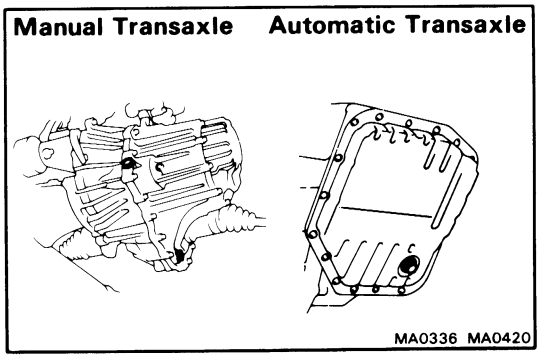

20. CHECK TRANSAXLE (A/T OR M/T) AND DIFFERENTIAL OIL

Visually check the transaxle (A/T or M/T) and differential for oil leakage.

If leakage is found, check for the cause and repair.

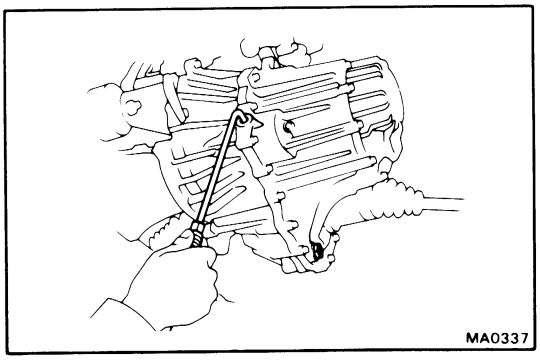

21. REPLACE MANUAL TRANSAXLE (TRANSMISSION AND DIFFERENTIAL) OIL

(a) Remove the drain plug and drain the oil.

(b) Reinstall drain plug securely.

(c) Add new oil until it begins to run out of the filler hole.

Transaxle oil (M/T and differential):

Oil grade	**API GL-4 or 5**
Viscosity	**SAE 75W-90 or 80W-90**
Capacity	
C52/4A-GE	**2.6 liters (2.7 US qts, 2.3 Imp. qts)**
E51/4A-GZE	**4.2 liters (4.4 US qts, 3.7 Imp. qts)**

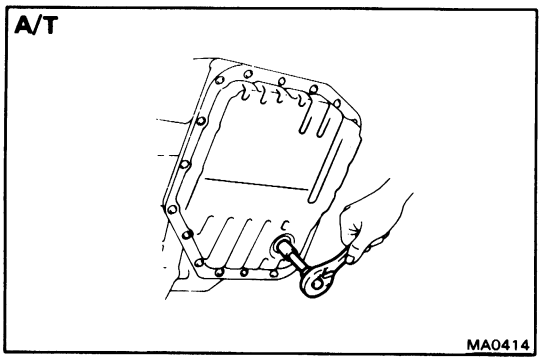

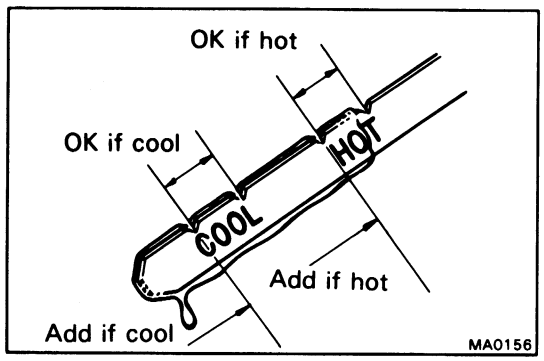

22. REPLACE AUTOMATIC TRANSAXLE (TRANSMISSION AND DIFFERENTIAL) FLUID

(a) Remove the drain plug and drain the fluid.

(b) Reinstall the drain plug securely.

(c) With the engine OFF, add new fluid through the dipstick tube.

Transaxle fluid (A/T and differential):
Fluid ATF DEXRON® II

Capacity (Drain and refill) (Reference)
3.1 liters (3.3 US qts, 2.7 Imp. qts)

(d) Start the engine and shift the selector into all positions from "P" through "L", and then shift into "P".

(e) With the engine idling, check the fluid level.
Add fluid up to the "COOL" level on the dipstick.

CAUTION: Do not overfill.

Front Suspension

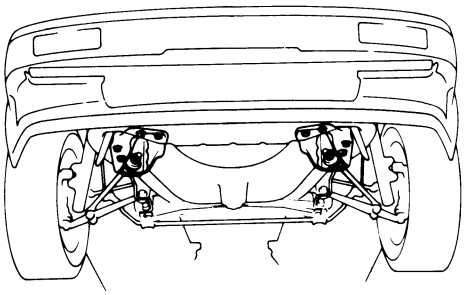

Rear Suspension

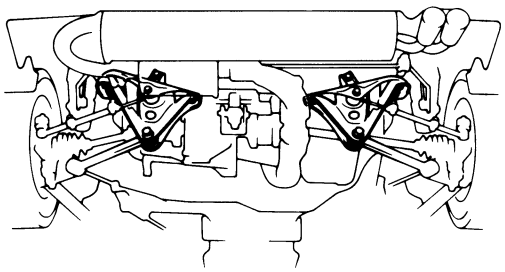

MA0342
MA0340
MA0338

23. TIGHTEN BOLTS AND NUTS ON CHASSIS AND BODY

Tighten the following parts:

- Front seats mounting bolts

Torque: 375 kg-cm (27 ft-lb, 37 N·m)

- Front strut bar bracket-to-body mounting bolts

Torque: 590 kg-cm (43 ft-lb, 58 N·m)

- Rear suspension arm bracket-to-body mounting bolts

Torque: 590 kg-cm (43 ft-lb, 58 N·m)

24. FINAL INSPECTION

(a) Check operation of the body parts:

- Hood (front and engine)
  Catch operates properly
  Hood locks securely when closed
- Doors
  Door locks operate properly
  Doors close properly
- Luggage compartment door
  Door lock operates properly
- Seats
  Seat adjust easily and locks securely in any position
  Front seat back locks securely in any position

(b) Road test

- Check the engine and chassis for abnormal noise.
- Check that the vehicle does not wander or pull to one side.
- Check that the brakes work properly and do not drag.

(c) Be sure to deliver a clean car and especially check:

- Steering wheel
- Shift lever knob
- All switch knobs
- Door handles
- Seats

GENERAL MAINTENANCE

These are the maintenance and inspection items which are considered to be the owner's responsibility. They can be performed by the owner or he can have them done at a service shop. These items include those which should be checked on a daily basis, those which, in most cases, do not require (special) tools and those which are considered to be reasonable for the owner to perform.
Items and procedures for general maintenance are as follows.

OUTSIDE VEHICLE

1. TIRES

(a) Check the pressure with a gauge. If necessary, adjust.

(b) Check for cuts, damage or excessive wear.

2. WHEEL NUTS

When checking the tires, check the nuts for looseness or for missing nuts. If necessary, tighten them.

3. TIRE ROTATION

It is recommended that the tires be rotated every 7,500 miles (12,000 km).

4. WINDSHIELD WIPER BLADES

Check for wear or cracks whenever they do not wipe clean. Replace if necessary.

5. FLUID LEAKS

(a) Check underneath for leaking fuel, oil, water or other fluid.

(b) If you smell gasoline fumes or notice any leak, have the cause found and corrected.

6. DOORS AND HOODS

(a) Check that all doors and hoods including the trunk lid operate smoothly, and that all latches lock securely.

(b) Check that the front hood secondary latch secures the hood from opening when the primary latch is released.

INSIDE VEHICLE

7. LIGHTS

Check that the headlights, stop lights, taillights, turn signal lights, and other lights are all working.

8. WARNING LIGHTS AND BUZZERS

Check that all warning lights and buzzers function properly.

9. HORN

Check that it is working.

10. WINDSHIELD GLASS

Check for scratches, pits or abrasions.

11. WINDSHIELD WIPER AND WASHER

(a) Check operation of the wipers and washer.

(b) Check that the wipers do not streak.

12. WINDSHIELD DEFROSTER

Check that air comes out from the defroster outlet when operating the heater or air conditioner.

13. REAR VIEW MIRROR

Check that it is mounted securely.

14. SUN VISORS

Check that they move freely and are mounted securely.

15. STEERING WHEEL

Check that it has specified freeplay. Be alert for changes in steering condition, such as hard steering, excessive freeplay or strange noise.

16. SEATS

(a) Check that all front seat controls such as seat adjusters, seatback recliner, etc. operate smoothly.

(b) Check that all latches lock securely in any position.

(c) Check that the locks hold securely in any latched position.

(d) Check that the head restraints move up and down smoothly and that the locks hold securely in any latched position.

17. SEAT BELTS

(a) Check that the seat belt system such as the buckles, retractors and anchors operate properly and smoothly.

(b) Check that the belt webbing is not cut, frayed, worn or damaged.

18. ACCELERATOR PEDAL

Check the pedal for smooth operation and uneven pedal effort or catching.

19. CLUTCH PEDAL (See page CL-3)

Check the pedal for smooth operation.
Check that the pedal has the proper freeplay.

20. BRAKE PEDAL (See page BR-5)

(a) Check the pedal for smooth operation.

(b) Check that the pedal has the proper reserve distance and freeplay.

(c) Check the brake booster function.

21. BRAKES

At a safe place, check that the brakes do not pull to one side when applied.

22. PARKING BRAKE (See page BR-7)

(a) Check that the lever has the proper travel.

(b) On a safe incline, check that vehicle is held securely with only the parking brake applied.

UNDER HOOD
(Front)

23. WINDSHIELD WASHER FLUID

Check that there is sufficient fluid in the tank.

24. RADIATOR AND HOSES

(a) Check that the front of the radiator is clean and not blocked with leaves, dirt or bugs.

(b) Check the hoses for cracks, kinks, rot or loose connections.

25. BRAKE AND CLUTCH FLUID LEVELS

(a) Check that the brake fluid level is near the upper level line on the see-through reservoir.

(b) Check that the clutch fluid level is within ± 5 mm (0.20 in.) of the reservoir hem.

(Rear)

26. ENGINE COOLANT LEVEL

Check that the coolant level is between the "FULL" and "LOW" lines on the see-through reservoir.

27. HOSES AND CONNECTIONS

Check the hoses for cracks, kinks, rot or loose connection.

28. BATTERY ELECTROLYTE LEVEL

Check that the electrolyte level of all battery cells is between the upper and lower leve lines on the case. If level is low, add distilled water only.

29. ENGINE DRIVE BELTS

Check all drive belts for fraying, cracks wear on oiliness.

30. ENGINE OIL LEVEL

Check the level on the dipstick with the engine turned off.

31. AUTOMATIC TRANSMISSION FLUID LEVEL

(a) Park the vehicle on a level surface.

(b) With the engine idling and the parking brake applied, shift the selector into all positions from "P" to "L", and then shift into "P".

(c) Pull out the dipstick and wipe off the fluid with a clean rag. Reinsert the dipstick and check that the fluid level is in the "HOT" range.

(d) Perform this check with the fluid at normal driving temperature (70 – 80°C or 158 – 176°F).

NOTE: Wait until the engine cools (about 30 min.) before checking the fluid level after extended high-speed driving in hot weather, driving in heavy traffic or pulling a trailer.

32. EXHAUST SYSTEM

Visually inspect for cracks, holes or loose supports.

If any change in the sound of the exhaust or smell of the exhaust fumes is noticed, have the cause located and corrected.

ENGINE MECHANICAL

	Page
TROUBLESHOOTING	EM-2
ENGINE TUNE-UP	EM-6
COMPRESSION CHECK	EM-14
TIMING BELT	EM-15
CYLINDER HEAD (4A-GE)	EM-26
CYLINDER HEAD (4A-GZE)	EM-55
CYLINDER BLOCK	EM-66

TROUBLESHOOTING

Problem	Possible cause	Remedy	Page
Engine overheats	Cooling system faulty	Troubleshoot cooling system	CO-2
	Incorrect ignition timing	Reset timing	IG-11
Engine will not crank or cranks slowly	Starting system faulty	Troubleshoot starting system	ST-2
Engine will not start/ hard to start (Crank OK)	Ignition problems		
	• Ignition coil	Inspect ignition coil	IG-7
	• Igniter	Inspect igniter	IG-4
	• Distributor	Inspect distributor	IG-7
	Spark plugs faulty	Inspect plugs	IG-5
	High-tension cords disconnected or broken	Inspect cords	IG-5
	Low compression	Check compression	EM-14
	Vacuum leaks		
	• PCV hose	Check PCV system	EC-5
	• EGR valve	Check EGR system	EC-10, 16
	• Intake manifold	Check intake manifold	EM-43
	• Intake air control valve (4A-GE)	Check intake air control valve	EM-43
	• Throttle body	Check throttle body	FI-97
	• Brake booster line	Check brake booster line	
	No fuel supply to injector	Troubleshoot EFI system	FI-9
	• No fuel in tank		
	• Fuel pump not working		
	• Fuel filter clogged		
	• Fuel line clogged or leaking		
	EFI system problems	Repair as necessary	
	Pulling in air between air flow meter and throttle body	Repair as necessary	
Rough idle, stalls or misses	Spark plugs faulty	Inspect plugs	IG-5
	High-tension cords faulty	Inspect cords	IG-5
	Ignition problems		
	• Ignition coil	Inspect coil	IG-7
	• Igniter	Inspect igniter	IG-4
	• Distributor	Inspect distributor	IG-7
	Incorrect ignition timing	Reset timing	IG-11
	Incorrect valve clearance	Adjust valve clearance	EM-7
	Low compression	Check compression	EM-14
	Incorrect idle speed	Adjust idle speed	MA-7 or EM-11
	Vacuum leaks		
	• PCV hose	Check PCV system	EC-5
	• EGR valve	Check EGR system	EC-10, 16
	• Intake manifold	Check intake manifold	EM-43
	• Intake air control valve (4A-GE)	Check intake air control valve	EM-43
	• Throttle body	Check throttle body	FI-97
	• Brake booster line	Check brake booster line	
	EFI system problems	Repair as necessary	
	Engine overheats	Check cooling system	CO-2
	Pulling in air between air flow meter and throttle body	Repair as necessary	

TROUBLESHOOTING (Cont'd)

Problem	Possible cause	Remedy	Page
Engine hesitates/ poor acceleration	Spark plugs faulty	Inspect plugs	IG-5
	High tension cords faulty	Inspect cords	IG-5
	Incorrect ignition timing	Reset timing	IG-11
	Incorrect valve clearance	Adjust valve clearance	EM-7
	Low compression	Check compression	EM-14
	Air cleaner clogged	Check air cleaner	MA-5
	Engine overheats	Check cooling system	CO-2
	Vacuum leaks		
	• PCV hose	Check PCV system	EC-5
	• EGR valve	Check EGR system	EC-10, 16
	• Intake manifold	Check intake manifold	EM-43
	• Intake air control valve (4A-GE)	Check intake air control valve	EM-43
	• Throttle body	Check throttle body	FI-97
	• Brake booster line	Check brake booster line	
	Emission control system problem (Cold engine)		
	• EGR system always on	Check EGR system	EC-10, 16
	EFI system problems	Repair as necessary	
	Pulling in air between air flow meter and throttle body	Repair as necessary	
	Fuel system clogged	Check fuel system	
	Air cleaner clogged	Check air eleaner	
Engine dieseling (runs after ignition switch is turned OFF)	EFI system problems	Repair as necessary	
Muffler explosion (after fire) on deceleration only	Deceleration fuel cut system completing off	Check fuel cut system	FI-128
	DP system faulty	Check DP system	EC-8
Muffler explosion (after fire) all the time	Incorrect ignition timing	Reset timing	IG-11
	Incorrect valve clearance	Adjust valve clearance	EM-7
	Air cleaner clogged	Check air cleaner	MA-5
	EFI system problem	Repair as necessary	

TROUBLESHOOTING (Cont'd)

Problem	Possible cause	Remedy	Page
Engine backfires	Incorrect ignition timing	Reset timing	IG-11
	Incorrect valve clearance	Adjust valve clearance	EM-7
	Vacuum leaks		
	• PCV hose	Check PCV system	EC-5
	• EGR valve	Check EGR system	EC-10, 16
	• Intake manifold	Check intake manifold	EM-43
	• Intake air control valve (4A-GE)	Check intake air control valve	EM-43
	• Throttle body	Check throttle body	FI-97
	• Brake booster line	Check brake booster line	
	EFI system problem	Repair as necessary	
	Pulling in air between air flow meter and throttle body	Repair as necessary	
	Insufficient fuel flow	Troubleshoot fuel system	
	Carbon deposits in combustion chambers	Inspect cylinder head	
Excessive oil consumption	Oil leak	Repair as necessary	
	PCV line clogged	Check PCV system	EC-5
	Piston ring worn or damaged	Check rings	EM-89
	Valve stem worn	Check valves and guides	EM-37
	Valve stem oil seal worn or damaged	Check oil seal	
Poor fuel mileage	Spark plugs faulty	Inspect plugs	IG-5
	Incorrect ignition timing	Reset timing	IG-11
	Low compression	Check compression	EM-14
	Air cleaner clogged	Check air cleaner	MA-5
	Fuel leak	Repair as necessary	
	EFI system problems	Repair as necessary	
	• Injector faulty		
	• Deceleration fuel cut system faulty		
	Spark control system always on	Check spark control system	
	Tires improperly inflated	Inflate tires to proper pressure	
	Idle speed too high	Adjust idle speed	MA-7 or EM-11
	Clutch slips	Troubleshoot clutch	CL-2
	Brakes drag	Troubleshoot brakes	BR-2

TROUBLESHOOTING (Cont'd)

Problem	Possible cause	Remedy	Page
Unpleasant odor	Incorrect idle speed	Adjust idle speed	MA-7 or EM-11
	Incorrect ignition timing	Reset timing	IG-11
	Vacuum leaks		
	• PCV hose	Check PCV system	EC-5
	• EGR valve	Check EGR system	EC-10, 16
	• Intake manifold	Check intake manifold	EM-43
	• Intake air control valve	Check intake air control valve	EM-43
	• Throttle body	Check throttle body	FI-97
	• Brake booster line	Check brake booster line	
	EFI system problems	Repair as necessary	

ENGINE TUNE-UP

INSPECTION OF ENGINE COOLANT

(See steps 1 and 2 on page CO-2)

INSPECTION OF ENGINE OIL

(See steps 1 and 2 on page LU-2)

INSPECTION OF BATTERY

(See steps 1 and 2 on page CH-3)

Standard specific gravity:
1.27 — 1.29 when fully charged at 20°C (68°F)

INSPECTION OF AIR FILTER

(See steps 3 on page MA-5)

INSPECTION OF HIGH-TENSION CORDS

(See page IG-5)

Maximum resistance: 25 kΩ per cord

INSPECTION OF SPARK PLUGS

(See page IG-5)

Correct electrode gap: 1.1 mm (0.043 in.)

Recomended spark plugs:

4A-GE	ND	PQ16R
	NGK	BCPR5EP11
4A-GZE	ND	PQ20R
	NGK	BCPR6EP11

INSPECTION OF ALTERNATOR DRIVE BELT

(See step 4 on page CH-4)

Drive belt tension:

4A-GE		New belt	175 ± 5 lb
		Used belt	115 ± 20 lb
4A-GZE	w/ Air con.	New belt	165 ± 10 lb
		Used belt	85 ± 15 lb
	w/o Air con.	New belt	175 ± 5 lb
		Used belt	115 ± 20 lb

ADJUSTMENT OF VALVE CLEARANCE

NOTE: Adjust the valve clearance while the engine is cold.

1. REMOVE CYLINDER HEAD COVERS
(See steps 19 to 22 on page EM-18)

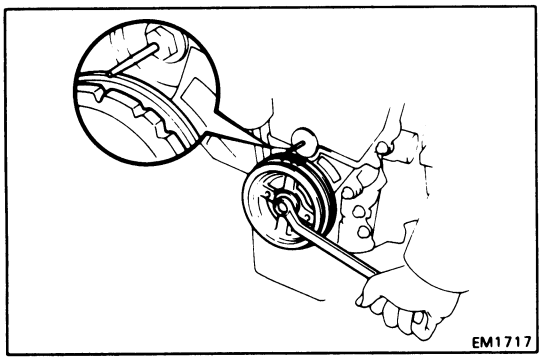

2. SET NO.1 CYLINDER TO TDC/COMPRESSION

(a) Turn the crankshaft pulley and align its groove with the timing mark "0" of the timing pointer.

(b) Check that the valve lifters on the No.1 cylinder are loose and valve lifters on the No.4 are tight.

If not, turn the crankshaft one revolution (360°) and align the mark as above.

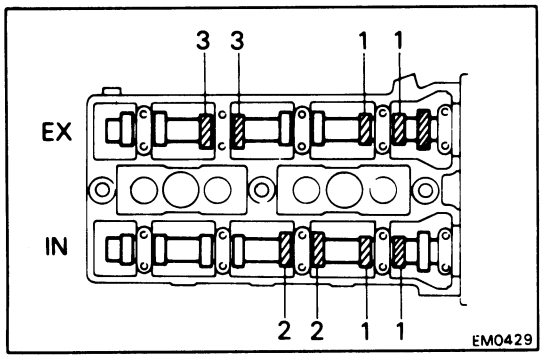

3. ADJUST VALVE CLEARANCE

(a) Check only those valves indicated as shown.

- Using a feeler gauge, measure the clearance between the valve lifter and camshaft.
- Record the valve clearance measurements which are out of specification. They will be used later to determine the required replacement adjusting shim.

Valve clearance (Cold):

Intake	**0.15 – 0.25 mm (0.006 – 0.010 in.)**
Exhaust	**0.20 – 0.30 mm (0.008 – 0.012 in.)**

(b) Turn the crankshaft one revolution (360°) and align the mark as above. (See procedure step 2)

(c) Check only the valves indicated as shown.
Measure the valve clearance.
(See procedure step (a)).

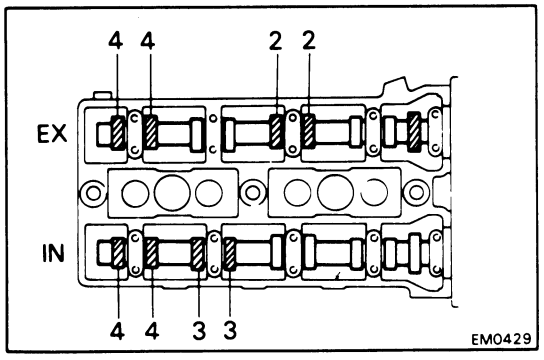

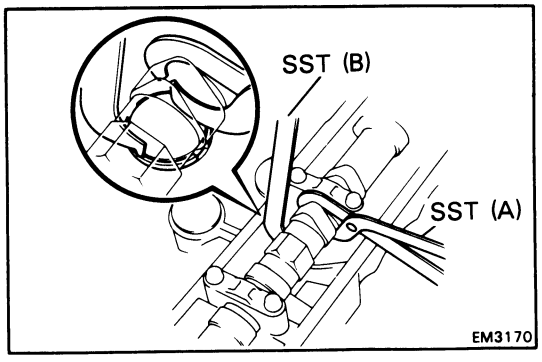

(d) Remove the adjusting shim.

- Turn the crankshaft to position the cam love of the camshaft on the adjusting valve upward.
- Using SST (A), press down the valve lifter and place SST (B) between the camshaft and valve lifter. Remove SST (A).

SST 09248-55010

NOTE: Before pressing down the valve lifter, position the notch toward the spark plug.

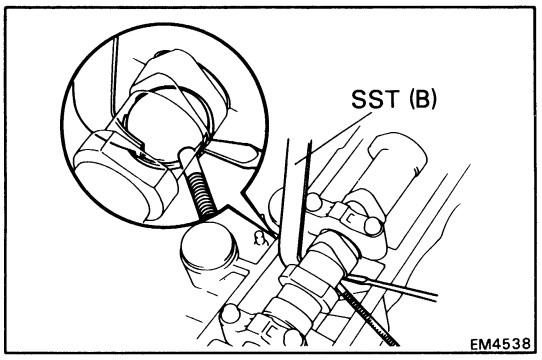

- Remove the adjusting shim with a small screwdriver and magnetic finger.

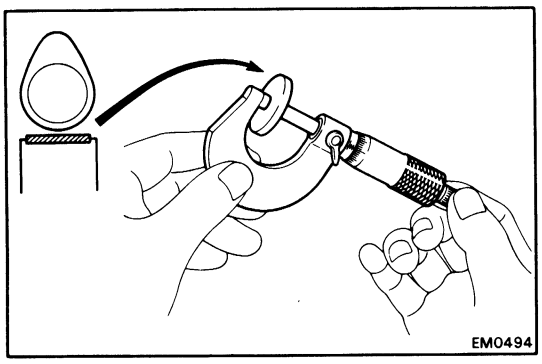

(e) Determine the replacement adjusting shim size following Formula or Charts:

- Using a micrometer, measure the thickness of the shim which was removed.
- Calculate the thickness of a new shim so the valve clearance comes within specified value.

T ..... Thickness of used shim
A ..... Measured valve clearance
N ..... Thickness of new shim

Intake N = T + (A − 0.20 mm (0.008 in.))
Exhaust N = T + (A − 0.25 mm (0.010 in.))

- Select a new shim with a thickness as close as possible to the calculated values.

NOTE: Shims are available in seventeen sizes of 0.05 mm (0.0020 in.), from 2.50 mm (0.0984 in.) to 3.30 mm (0.1299 in.).

(f) Install a new adjusting shim.

- Place a new adjusting shim on the valve lifter.
- Using SST (A), press down the valve lifter and remove SST (B).

SST 09248-55010

(g) Recheck the valve clearance.

4. REINSTALL CYLINDER HEAD COVERS
(See steps 2 to 5 on pages EM-21, 22)

Adjusting Shim Selection Using Chart

INTAKE

| Measured Clearance (mm) | Installed Shim Thickness (mm) | | |

Adjusting Shim Selection Using Chart

EXHAUST

| Measured Clearance (mm) | Installed Shim Thickness (mm) | | |

INSPECTION AND ADJUSTMENT OF IGNITION TIMING

(See page IG-11)

INSPECTION AND ADJUSTMENT OF IDLE SPEED (4A-GE)

(See page MA-7)

INSPECTION AND ADJUSTMENT OF IDLE SPEED (4A-GZE)

1. INITIAL CONDITIONS

(a) Engine at reach normal operating temperature

(b) Air cleaner installed

(c) All pipes and hoses of air induction system connected

(d) All vacuum lines connected

NOTE: All vacuum hoses for EGR systems, etc. should be properly connected.

(e) EFI system wiring connectors fully plugged

(f) All accessories switched OFF

(g) Transmission in "N" range

2. CHECK ISC VALVE SYSTEM (See page FI-106)

3. CONNECT TACHOMETER (See page IG-2)

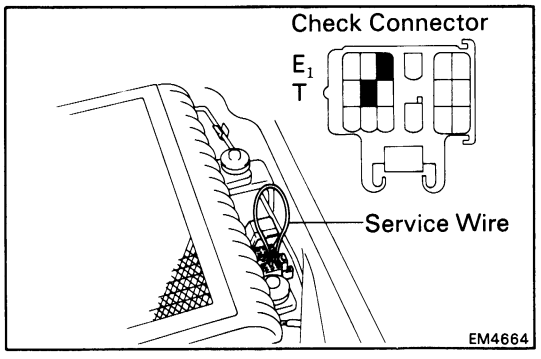

4. ADJUST IDLE SPEED

(a) Using a service wire, short terminals T and E_1 of check connector.

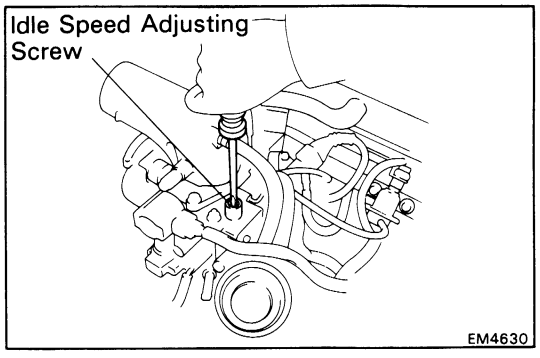

(b) Check the idle speed.

Idle speed: 800 rpm

(c) If the idle speed is not as specified, adjust the idle speed by turning the IDLE SPEED ADJUSTING SCREW.

NOTE: Only when the IDLE SPEED ADJUSTING SCREW is fully closed is 850 – 900 rpm possible.

(d) Remove the service wire.

5. FURTHER CHECK IDLE SPEED

Idle speed: 800 rpm

If the idle speed is not within this value carry out either of the belowlisted procedures and then recheck the idle speed.

Carry out a driving test, including stop-go several times at a speed above 10 km/h, or start the engine, idle for 30 seconds and then turn the engine off repeatedly. By doing this, idle data will be stored in the ISC and the idle rpm will be at specified value.

IDLE HC/CO CONCENTRATION CHECK METHOD

NOTE: This check is used only to determine whether or not the idle HC/CO complies with regulations.

1. INITIAL CONDITIONS

(a) Engine at reach normal operating temperature

(b) Air cleaner installed

(c) All pipes and hoses of air induction system connected

(d) All accessories switched OFF

(e) All vacuum lines properly connected

NOTE: All vacuum hoses for EGR systems, etc. should be properly connected.

(f) EFI system wiring connectors fully plugged

(g) Ignition timing set correctly

(h) Transmission in N range

(i) Tachometer and HC/CO meter calibrated and at hand.

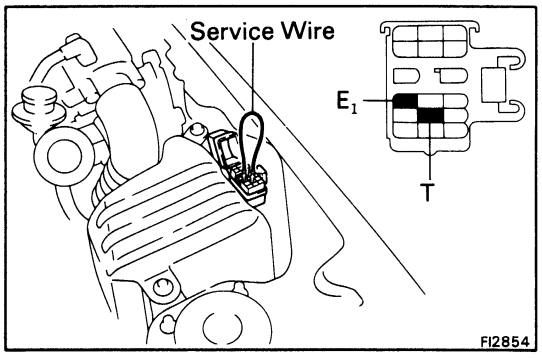

2. START ENGINE

3. CHECK OXYGEN SENSOR OPERATION

(a) Using a service wire, short the terminals T and E_1 of the check connector.

(b) Connect the positive (+) probe of a voltmeter to terminal V_F of the check connector, and negative (−) probe to terminal E_1.

(c) Hold the engine speed at 2,500 rpm for 90 seconds.

(d) Then, maintaining engine at 2,500 rpm, count how many times needle of voltmeter fluctuates between 0 and 5 V.

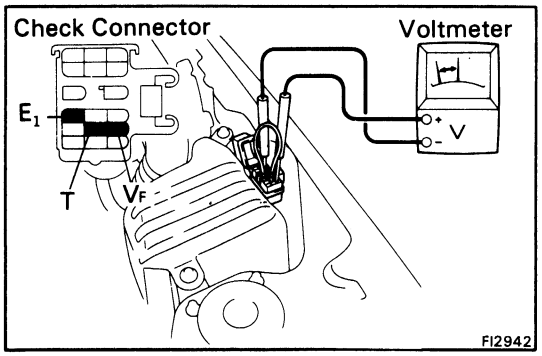

Minimum needle fluctuation:
8 times for every 10 seconds

If the fluctuation is less than minimum, check the air induction system. If necessary, see EFI SYSTEM.

4. **RACE ENGINE AT 2,500 RPM FOR APPROX. 90 SECONDS**

5. **INSERT HC/CO METER TESTING PROBE INTO TAILPIPE AT LEAST 40 cm (1.3 ft)**

6. **CHECK HC/CO CONCENTRATION AT IDLE**

   Wait at least one minute before measuring to allow the concentration to stabilize, complete the measuring within three minutes.

   If the HC/CO concentration does not conform to regulations, see the following for possible causes.

Troubleshooting

HC	CO	Problems	Causes
High	Normal	Rough idle	1. Faulty ignition: ● Incorrect timing ● Fouled, shorted or improperly gapped plugs ● Open or crossed high-tension cords ● Cracked distributor cap 2. Incorrect valve clearance 3. Leaky EGR valve 4. Leaky intake and exhaust valves 5. Leaky cylinder
High	Low	Rough idle (Fluctuating HC reading)	1. Vacuum leak: ● PCV hose ● EGR valve ● Intake manifold ● Intake air control valve (4A-GE) ● Throttle body ● Brake booster line 2. Lean mixture causing misfire
High	High	Rough idle (Black smoke from exhaust)	1. Restricted air filter 2. Faulty EFI system ● Faulty pressure regulator ● Clogged fuel return line ● Defective water temp. sensor ● Defective air temp. sensor ● Faulty ECU ● Faulty injector ● Faulty cold start injector ● Faulty throttle position sensor ● Air flow meter

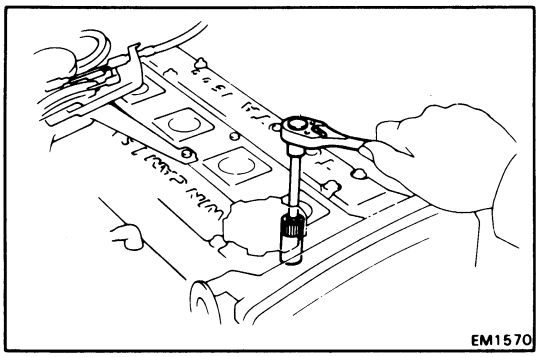

COMPRESSION CHECK

NOTE: If there is lack of power, excessive oil consumption or poor fuel economy after engine tune up, measure the cylinder compression pressure.

1. **WARM UP ENGINE**

2. **REMOVE SPARK PLUGS**

   Using a plug wrench (16 mm), remove the spark plugs.

3. **DISCONNECT HIGH-TENSION CORD FROM IGNITION COIL**

4. **DISCONNECT COLD START INJECTOR CONNECTOR**

5. **DISCONNECT INJECTOR CONNECTORS**

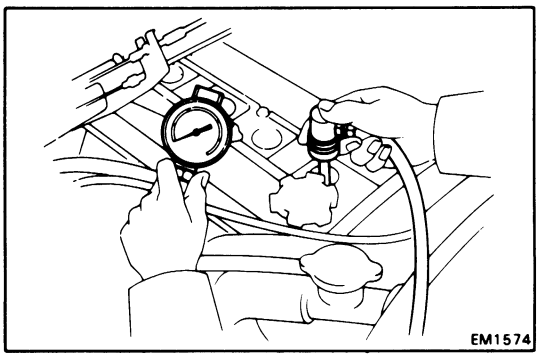

6. **MEASURE CYLINDER COMPRESSION PRESSURE**

   (a) Insert a compression gauge into the spark plug hole.

   (b) Fully open the throttle.

   (c) While cranking the engine, measure the compression pressure.

   NOTE: Always use a fully charged battery to insure that at least 250 rpm can be attained.

   (d) Repeat steps (a) through (c) for each cylinder.

   Compression pressure:
   4A-GE 12.6 kg/cm² (179 psi, 1,236 kPa)
   4A-GZE 11.0 kg/cm² (156 psi, 1,079 kPa)

   Minimum pressure:
   4A-GE 10.0 kg/cm² (142 psi, 981 kPa)
   4A-GZE 8.5 kg/cm² (121 psi, 834 kPa)

   Difference between each cylinder:
   1.0 kg/cm² (14 psi, 98 kPa) or less

   (e) If compression of one or more cylinders is low, pour a small amount of engine oil into that cylinder through the spark plug hole and repeat steps (a) through (c) for the cylinder with low compression.

   - If adding oil helps the compression, chances are that the piston rings and/or cylinder bore are worn or damaged.
   - If pressure remains low, a valve may be sticking or seated improperly, or there may be leakage past the gasket.

TIMING BELT

COMPONENTS

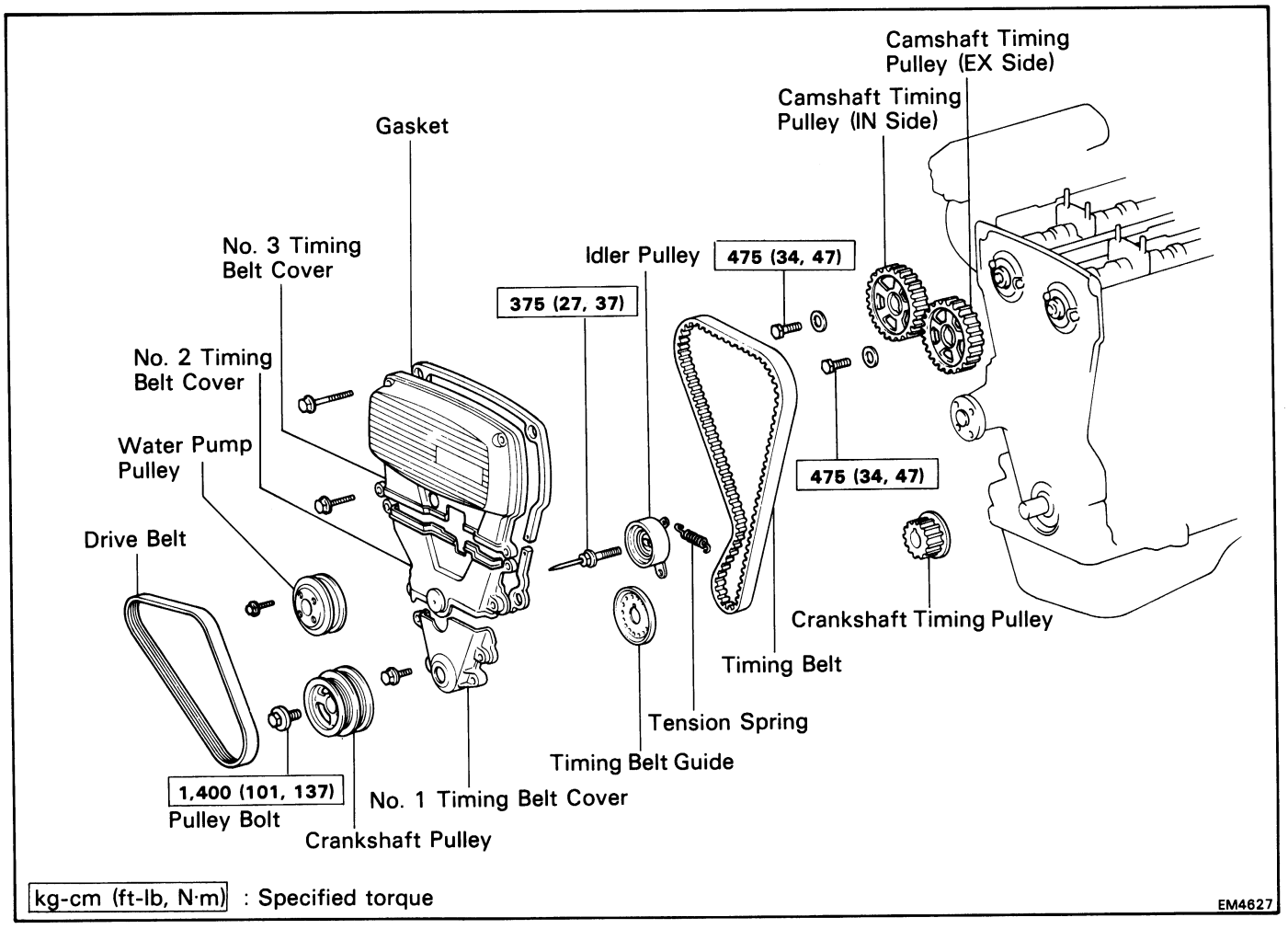

REMOVAL OF TIMING BELT

1. **REMOVE RH WHEEL**

2. **REMOVE ENGINE UNDER COVER**

3. **(4A-GE with A/C)**
   REMOVE A/C DRIVE BELT

4. **(4A-GZE)**
   REMOVE ALTERNATOR DRIVE BELT

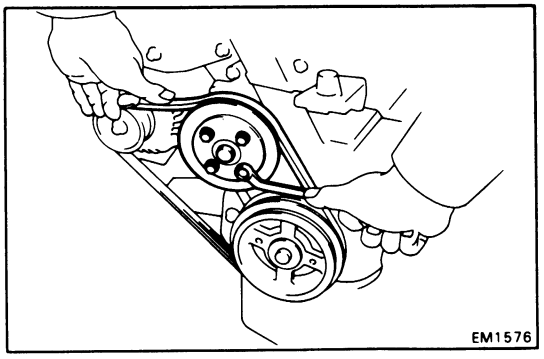

5. **REMOVE DRIVE BELT AND WATER PUMP PULLEY**
   (a) Loosen the four bolts mounting the pulley to the pulley seat of the water pump.
   (b) Loosen the idler pulley lock nut and adjusting bolt, and remove the drive belt.
   (c) Remove the four bolts and water pump pulley.

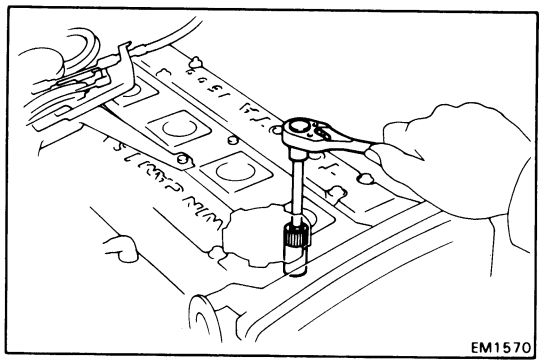

6. REMOVE SPARK PLUGS

Using plug wrench (16 mm), remove the spark plugs.

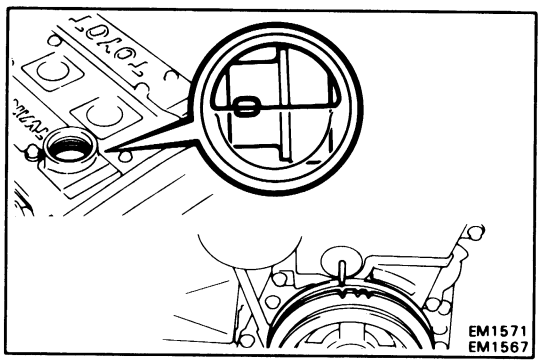

7. SET NO. 1 CYLINDER TO TDC/COMPRESSION

(a) Turn the crankshaft pulley and align its groove with the idler pulley bolt.

(b) Remove the oil filler cap and check that you can see the cavity in the camshaft.

If necessary, turn the crankshaft pulley one complete revolution.

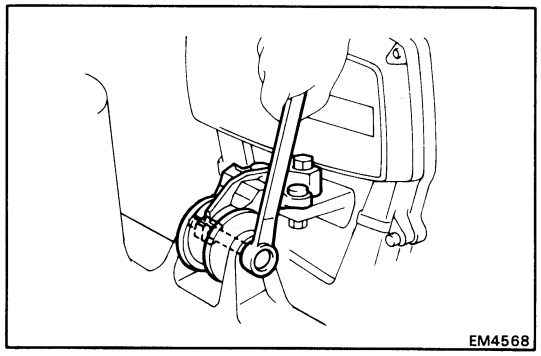

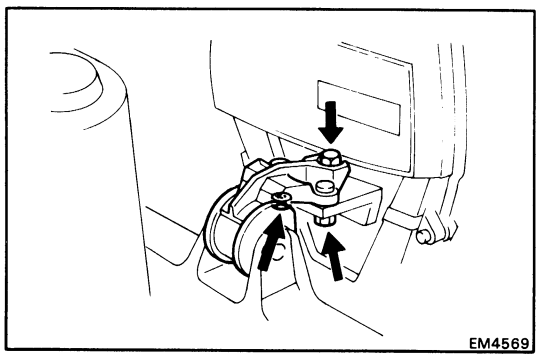

8. REMOVE RH ENGINE MOUNTING INSULATOR

(a) Disconnect the high-tension cords from the ignition coil.

(b) Disconnect the brake booster vacuum hose from the intake manifold.

(c) (4A-GE w/ Cruise control)
Disconnect the cruise control vacuum hose from the intake manifold.

(d) Slightly raise the engine with a jack.

NOTE: Place a wooden block between the jack and engine.

(e) Remove the mounting through bolt.

(f) Remove the two nuts, bolt and RH engine mounting insulator.

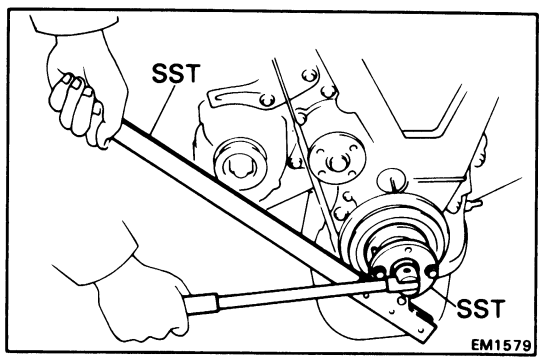

9. REMOVE CRANKSHAFT PULLEY

(a) Using SST to hold the crankshaft pulley, loosen the pulley bolt.

SST 09213-70010 and 09330-00021

(b) Remove SST and pulley bolt.

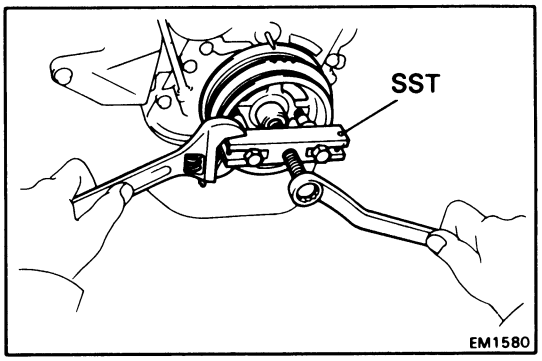

(c) Using SST, remove the crankshaft pulley.
SST 09213-31021

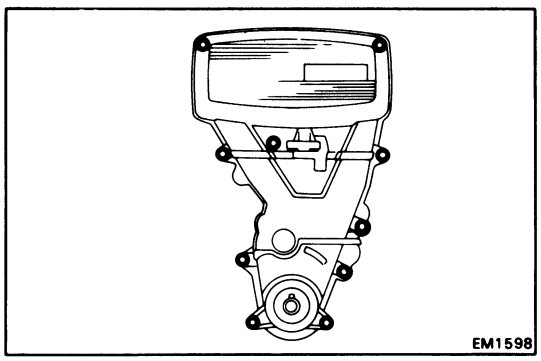

10. REMOVE TIMING BELT COVERS WITH GASKETS

Remove the ten bolts and timing belt covers with gaskets.

11. REMOVE TIMING BELT GUIDE

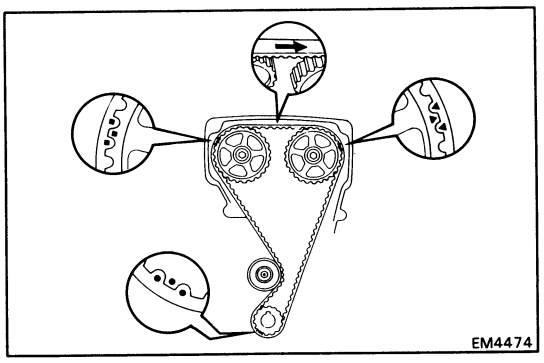

12. REMOVE TIMING BELT

NOTE: If reusing the timing belt, draw a direction arrow on the belt (in direction of engine revolution), and place matchmarks on the pulleys and belt as shown.

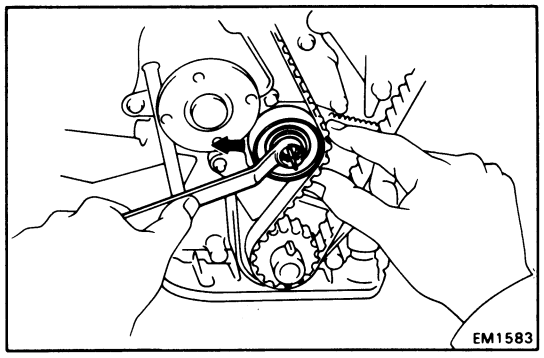

(a) Loosen the idler pulley bolt, push it left as far as it will go and temporarily tighten it.

(b) Remove the belt.

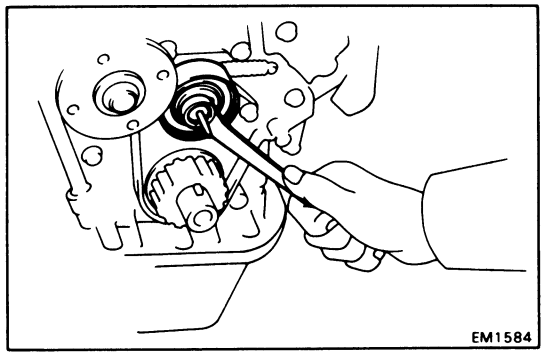

13. REMOVE IDLER PULLEY AND TENSION SPRING

Remove the bolt, pulley and tension spring.

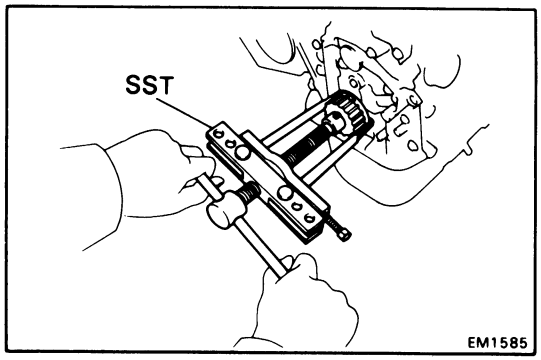

14. REMOVE CRANKSHAFT TIMING PULLEY

NOTE: If the pulley is difficult to remove by hand, remove using SST.

SST 09950-20017

15. (4A-GZE)
REMOVE OIL COOLER HOSE

16. (A/T vehicle)
DISCONNECT A/T THROTTLE CABLE

17. DISCONNECT ACCELERATOR CABLE

18. (w/ Cruise control)
DISCONNECT CRUISE CONTROL CABLE

19. REMOVE PCV HOSE

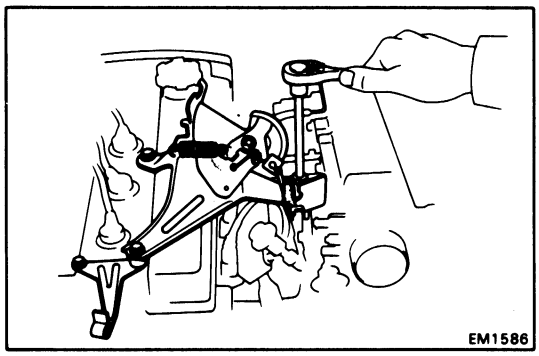

20. (4A-GE)
REMOVE ACCELERATOR LINK AND SPEEDOMETER CABLE CLAMP

Remove the four bolts, accelerator link and speedometer cable clamp.

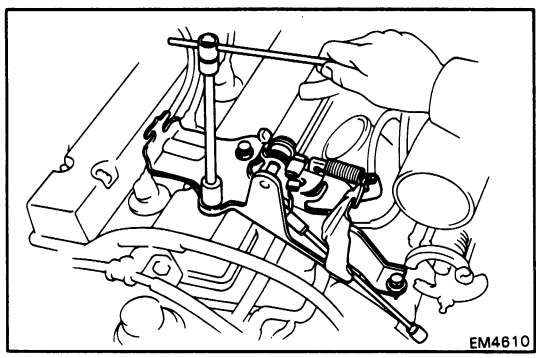

21. (4A-GZE w/ Cruise control)
REMOVE ACCELERATOR LINK

Disconnect accelerator rod, and remove the three bolts and accelerator link.

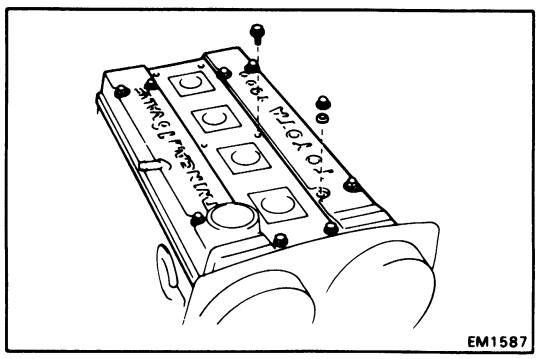

22. REMOVE CYLINDER HEAD COVERS

(a) Disconnect following wires:
- Engine compartment cooling fan motor connector
- Noise filter connector
- Distributor wire connectors
- Oil pressure sender gauge connector
- (w/ A/C)
  Compressor connector

(b) Remove the four bolts, center cover and gasket.

(c) Remove the eight cap nuts, seal washers, two head covers and gaskets.

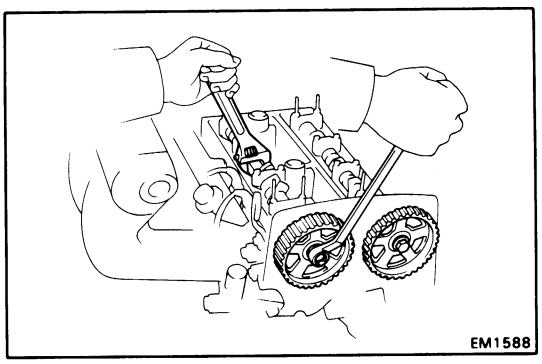

23. REMOVE CAMSHAFT TIMING PULLEYS

Secure the hexagonal portion of the camshaft, remove the bolt, plate washer and pulley. Remove the two camshaft pulleys.

CAUTION: Be careful not to damage the cylinder head with the wrench.

INSPECTION OF TIMING BELT COMPONENTS

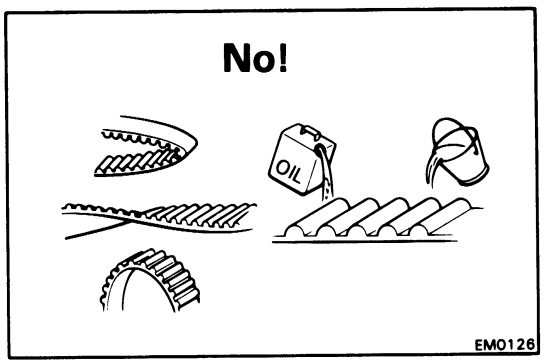

1. INSPECT TIMING BELT

CAUTION:

- **Do not bend, twist or turn the timing belt inside out.**
- **Do not allow the timing belt to come into contact with oil, water or steam.**
- **Do not utilize timing belt tension when installing or removing the mount bolt of the camshaft timing pulley.**

If there are defect as shown in the figures, check the following points:

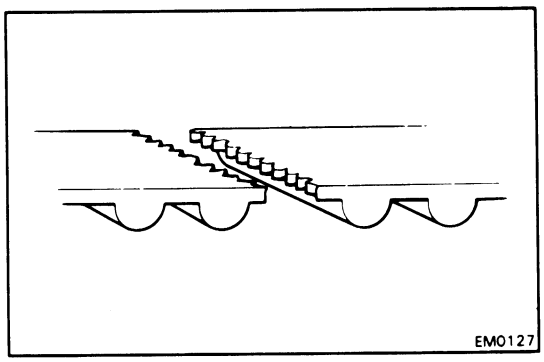

(a) Premature parting

- Check for proper installation.
- Check timing cover gasket for damage and proper installation.

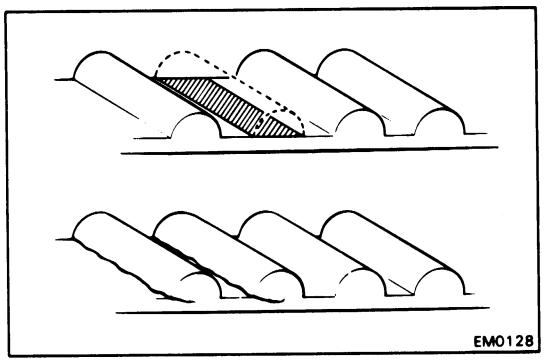

(b) If the belt teeth are cracked or damaged, check to see if either the camshaft or water pump is locked.

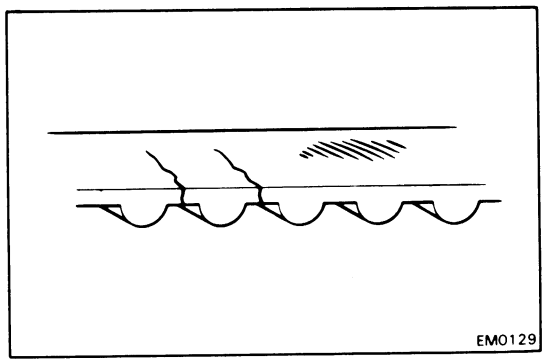

(c) If there is noticeable wear or cracks on the belt face, check to see if there nicks on side of the idler pulley lock.

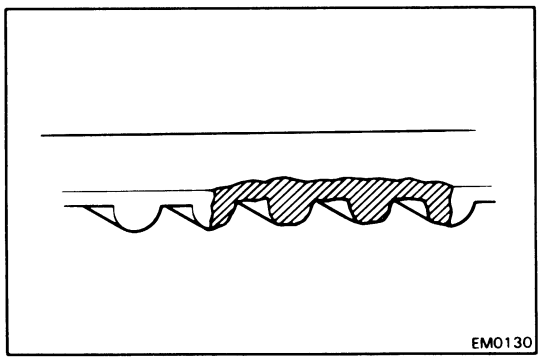

(d) If there is wear or damage on only one side of the belt, check the belt guide and the alignment of the each pulley.

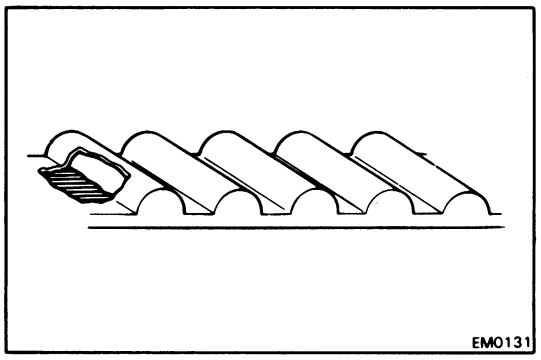

(e) If there is noticeable wear on the belt teeth, check timing cover for damage and check for correct gasket installation. Check for foreign material on the pulley teeth.

If necessary, replace the timing belt.

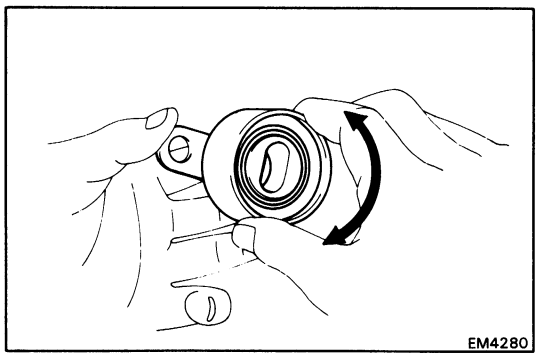

2. INSPECT IDLER PULLEY

Check the turning smoothness of the idler pulley.

If necessary, replace the idler pulley.

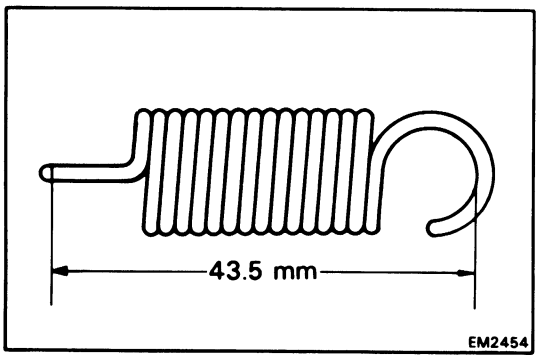

3. INSPECT TENSION SPRING

(a) Measure the free length of the tension spring.

Free length: 43.5 mm (1.713 in.)

If the free length is not as specified, replace the tension spring.

(b) Measure the tension of the tension spring at the specified installed length.

Installed tension: 9.97 kg (22.0 lb, 98 N·m) at 50.2 mm (1.976 in.)

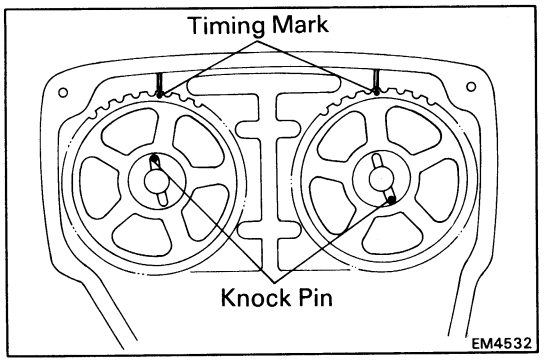

INSTALLATION OF TIMING BELT

(See page EM-15)

1. INSTALL CAMSHAFT TIMING PULLEYS

(a) Position the knock pin of the camshafts as shown in the figure.

(b) Align the camshaft knock pin with the knock pin groove of the pulley, and slide the pulley, facing the timing mark upward.

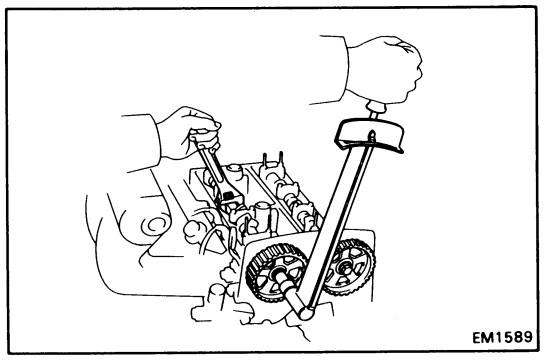

(c) Secure the hexagonal portion of the camshaft, and install the plate washer and bolt. Torque the bolt.

Torque: 475 kg-cm (34 ft-lb, 47 N·m)

CAUTION: Be careful not to damage the cylinder head with the wrench.

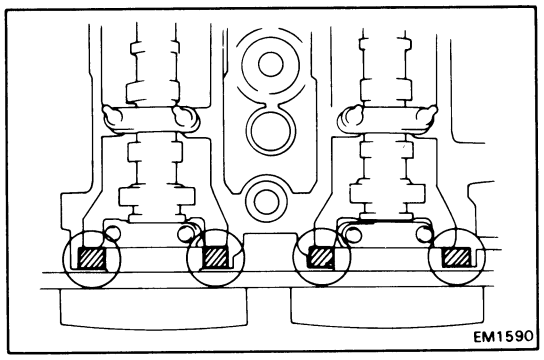

2. INSTALL CYLINDER HEAD COVERS WITH GASKET

(a) Apply seal packing to the cylinder head as shown in the figure.

Seal packing: Part No. 08826-00080 or equivalent

(b) Install the gaskets to the head covers.

(c) Install the two head covers with the four seal washers and cap nuts.

Torque: 130 kg-cm (9 ft-lb, 13 N·m)

(d) Install the gasket to the center cover.

(e) Install the center cover with the four bolts.

Connect the following wires:

- Distributor wire connector
- Engine compartment cooling fan motor connector
- Oil pressure sender gauge connector
- (w/ A/C)
  Compressor connector
- Noise filter connector

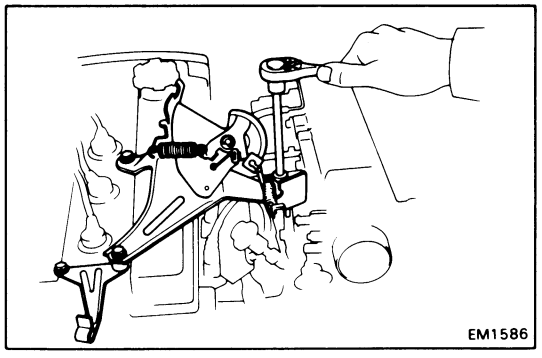

3. (4A-GE)
INSTALL ACCELERATOR LINK AND SPEEDOMETER CABLE CLAMP

Install the accelerator link and speedometer cable clamp with the four bolts.

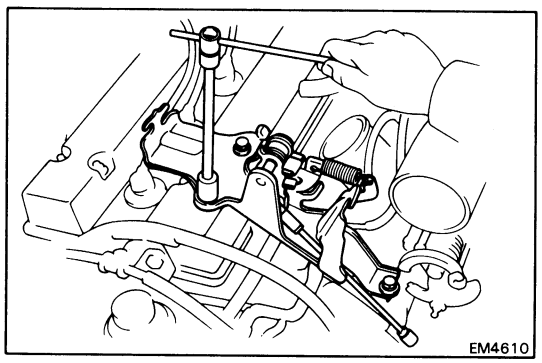

4. (4A-GZE w/ Cruise control)
INSTALL ACCELERATOR LINK

(a) Install the accelerator link with the three bolts.

(b) Connect the accelerator rod.

5. INSTALL PCV HOSE

6. (w/ Cruise control)
CONNECT CRUISE CONTROL CABLE

7. CONNECT ACCELERATOR CABLE

8. (A/T vehicle)
CONNECT A/T THROTTLE CABLE

9. (4A-GZE)
INSTALL OIL COOLER HOSE

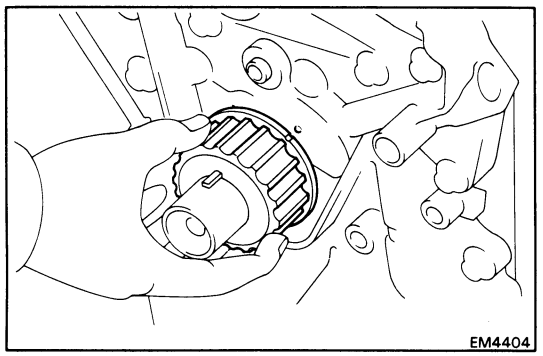

10. INSTALL CRANKSHAFT TIMING PULLEY

Align the pulley set key with the key groove of the pulley, and slide the pulley.

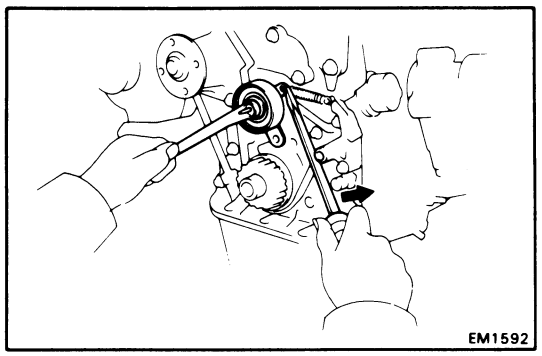

11. TEMPORARILY INSTALL IDLER PULLEY AND TENSION SPRING

(a) Install the pulley with the bolt. Do not tighten the bolt yet.

(b) Install the tension spring.

(c) Pry the pulley toward the left as far as it will go and tighten the bolt.

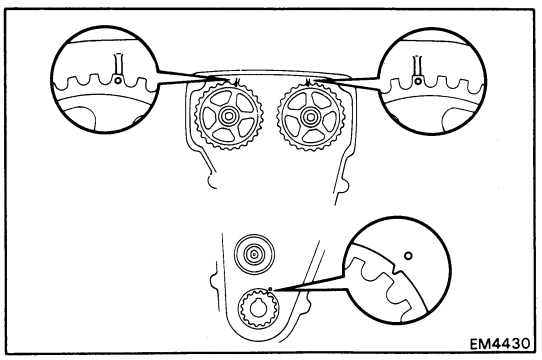

12. SET NO. 1 CYLINDER TO TDC/COMPRESSION

(a) Align the timing marks of the camshaft timing pulleys and No. 4 timing belt cover by turning the camshafts.

(b) Align the timing marks of the crankshaft timing pulley and oil pump body by turning the crankshaft.

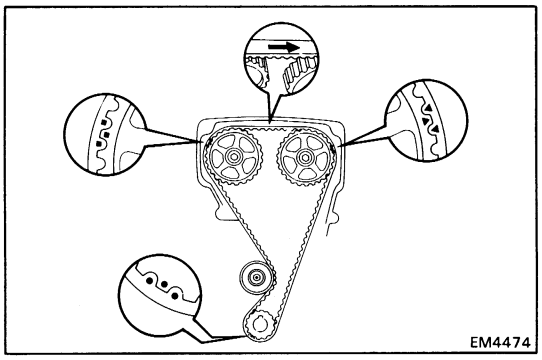

13. INSTALL TIMING BELT

CAUTION: The engine should be cold.

NOTE: If reusing the timing belt, align the points marked during removal, and install the belt with the arrow pointing in the direction of engine revolution.

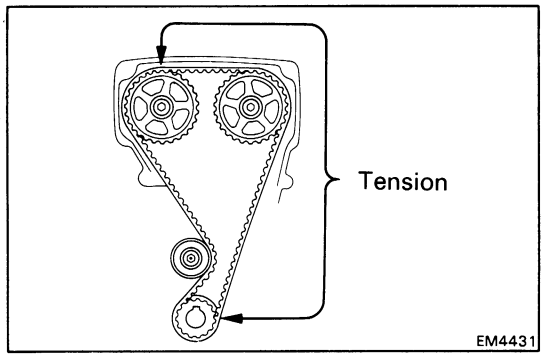

Install the timing belt, insuring the tension between the intake camshaft and crankshaft timing pulleys.

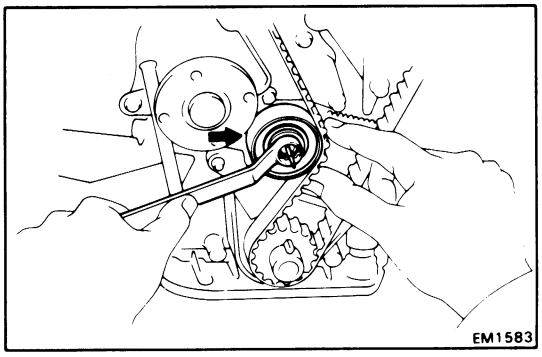

14. CHECK VALE TIMING AND TIMING BELT DEFLECTION

(a) Slowly loosen the idler pulley bolt.

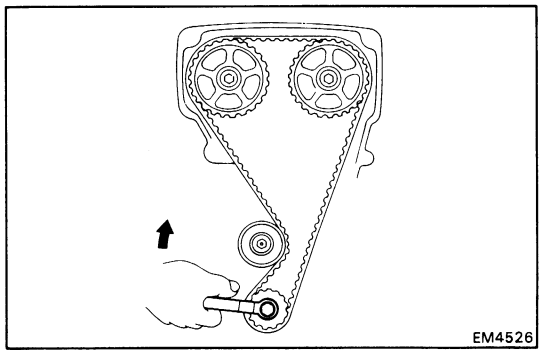

(b) Temporarily install the crankshaft pulley bolt, and turn the crankshaft pulley two revolutions from TDC to TDC.

NOTE: Always turn the crankshaft clockwise.

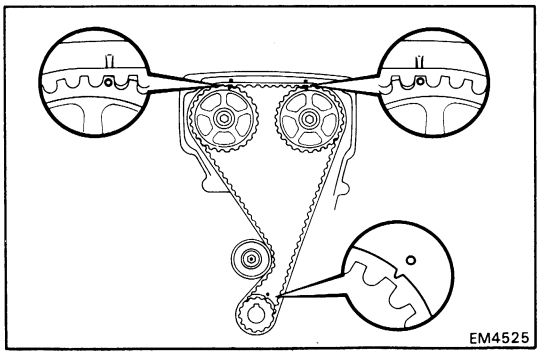

(c) Check that each pulley aligns with the timing marks as shown in the figure.

If the marks do not align, remove the timing belt and reinstall it.

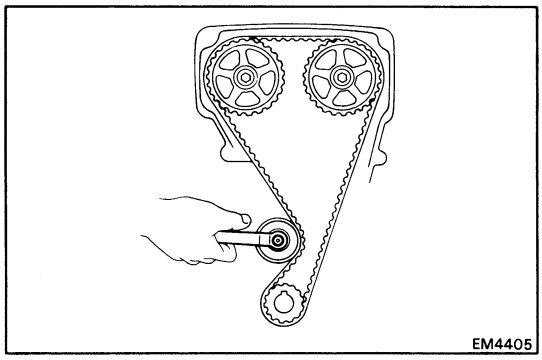

(d) Torque the idler pulley bolt.

Torque: 375 kg-cm (27 ft-lb, 37 N·m)

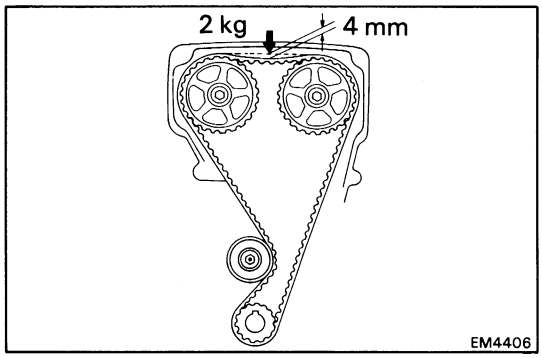

(e) Check that there is belt deflection at the position indicated in the figure.

Deflection: 4 mm (0.16 in.) at 2 kg (4.4 lb, 20 N)

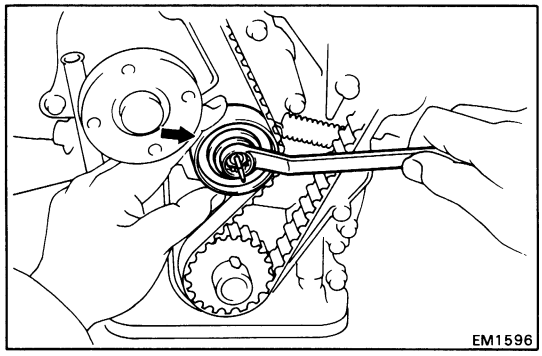

If the deflection is not as specified, adjust with the idler pulley.

(f) Remove the temporarily installed crankshaft pulley bolt.

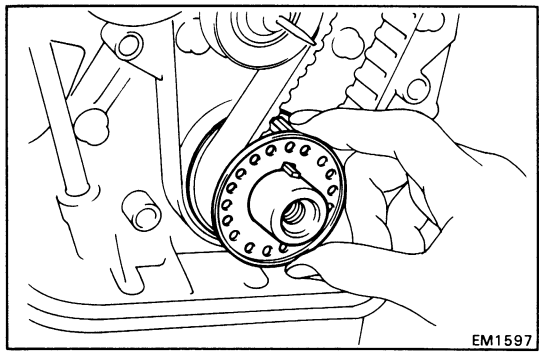

15. INSTALL TIMING BELT GUIDE

Install the guide, facing the cup side outward.

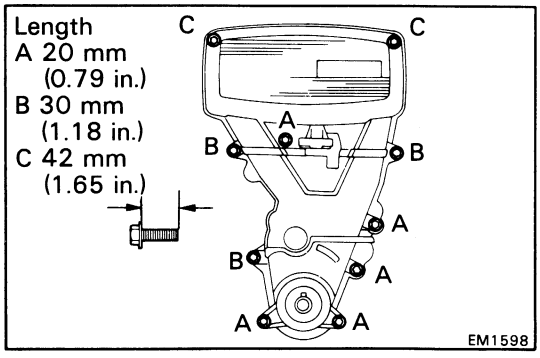

16. INSTALL TIMING BELT COVERS

(a) Install the gaskets to the belt covers.

(b) Install the No. 1, No. 2 and No. 3 belt covers with the ten bolts.

NOTE: Each bolt length is indicated in the figure.

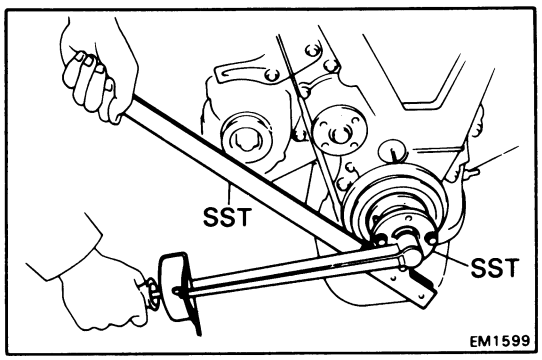

17. INSTALL CRANKSHAFT PULLEY

(a) Align the pulley set key with the key groove of the pulley, slide the pulley.

(b) Using SST, install and torque the the bolt.

SST 09213-70010 and 09330-00021

Torque: 1,400 kg-cm (101 ft-lb, 137 N·m)

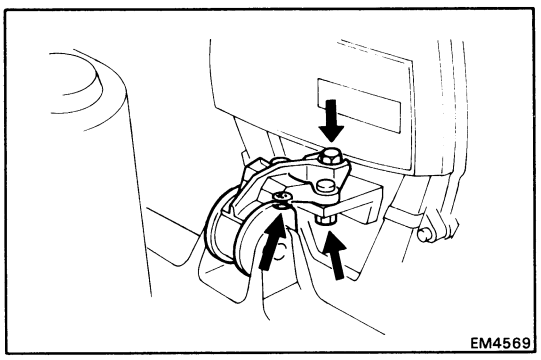

18. INSTALL RH ENGINE MOUNTING INSULATOR

(a) Install the RH engine mounting insulator to the engine with the two nuts and bolt.

(b) Align the RH mounting insulator into the bracket and temporarily install the mounting through bolt.

(c) Lower the engine and remove the jack.

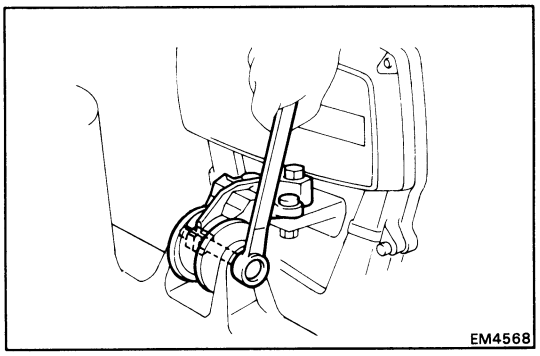

(d) Tighten the mounting through bolt.

Torque: 600 kg-cm (43 ft-lb, 58 N·m)

(e) (4A-GE w/ Cruise control)
Connect the cruise control vacuum hose to the intake manifold.

(f) Connect the brake booster vacuum hose to the intake manifold.

(g) Connect the high-tension cords to the ignition coil.

19. INSTALL SPARK PLUGS
(See page IG-6)

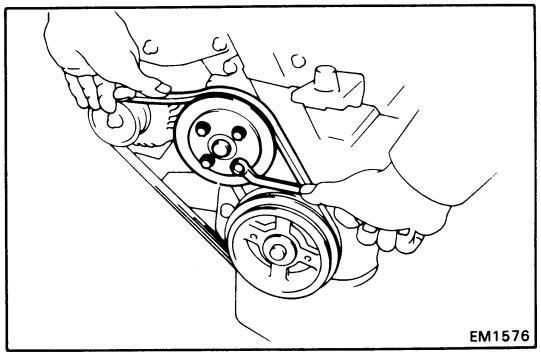

20. INSTALL WATER PUMP PULLEY AND DRIVE BELT

(a) Install the water pump pulley with the four bolts.

(b) Install and adjust drive belts.
(See page MA-4)

(c) Stretch the belt tight and tighten the four pulley bolt.

21. (4A-GZE)
INSTALL AND ADJUST ALTERNATOR DRIVE BELT
(See page MA-4)

22. (4A-GE with A/C)
INSTALL AND ADJUST A/C DRIVE BELT
(See page MA-4)

23. INSTALL ENGINE UNDER COVER

24. INSTALL RH WHEEL

CYLINDER HEAD (4A-GE)

COMPONENTS

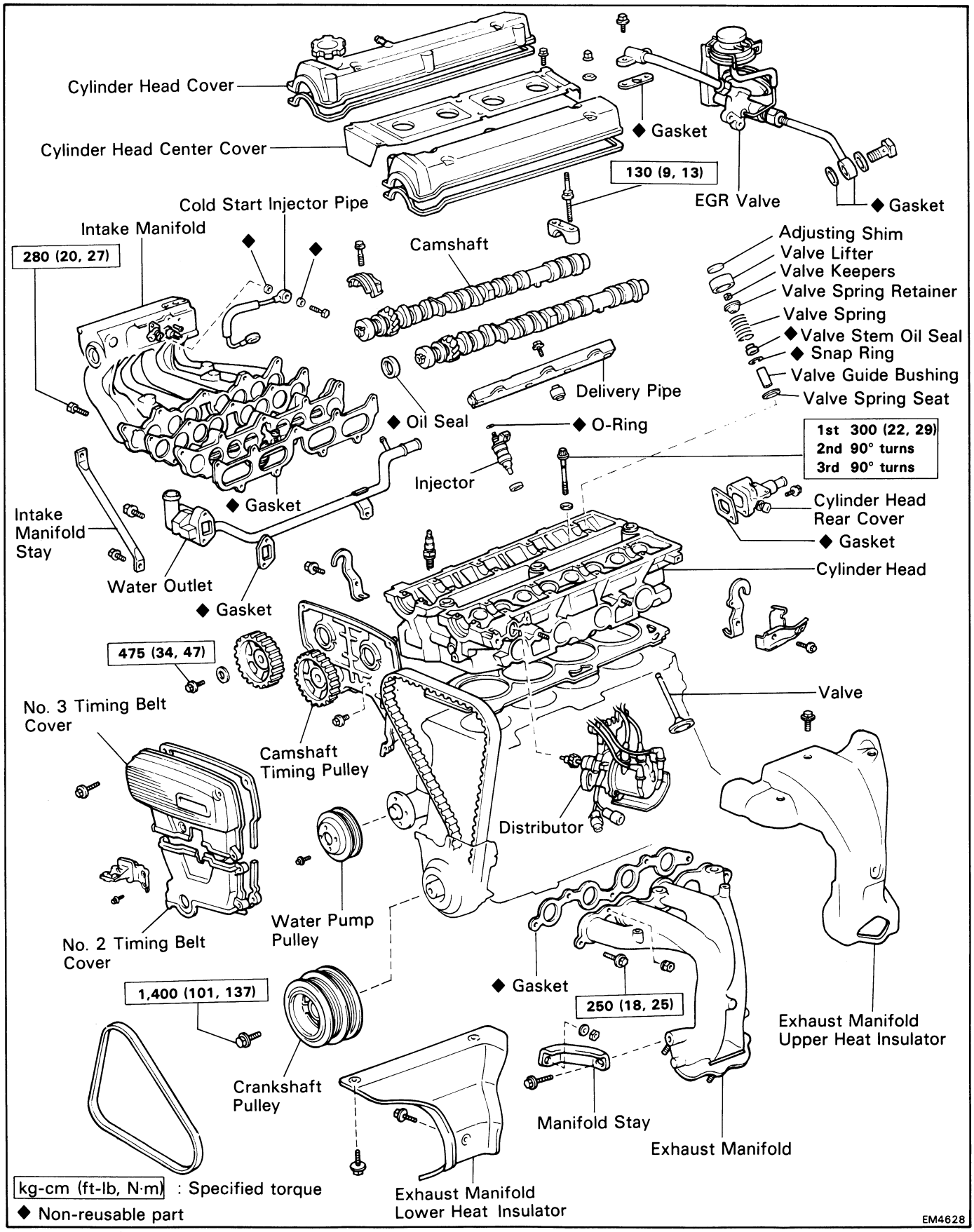

REMOVAL OF CYLINDER HEAD

(See page EM-26)

1. **DISCONNECT CABLE FROM NEGATIVE TERMINAL OF BATTERY**

2. **REMOVE ENGINE HOOD**

3. **REMOVE ENGINE UNDER COVER**

4. **DRAIN ENGINE COOLANT**
   (See page CO-3)

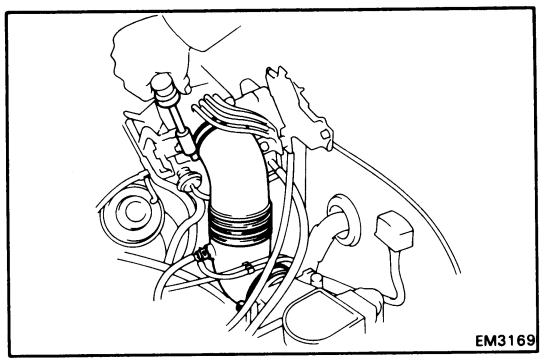

5. **REMOVE AIR RESONATOR**

6. **REMOVE NO. 1 AIR CLEANER HOSE**
   (a) Disconnect the vacuum hose from the air cleaner hose.
   (b) Disconnect the VSV and air flow meter connector.
   (c) Loosen the two clamp bolts and remove the air cleaner hose.

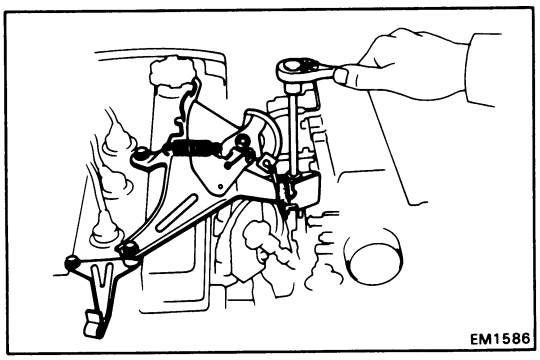

7. **REMOVE ACCELERATOR LINK AND SPEEDOMETER CABLE CLAMP**
   (a) (w/ Cruise control)
   Disconnect the cruise control cable.
   (b) Disconnect the accelerator cable and connecting rod.
   (c) Remove the four bolts, accelerator link and speedometer cable clamp.

8. **DISCONNECT FOLLOWING VACUUM HOSES:**
   - Brake booster hose
   - (w/ Cruise control)
     Cruise control vacuum hose from intake manifold

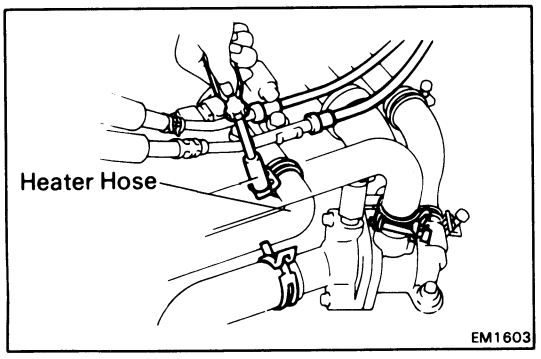

9. **DISCONNECT HEATER HOSE FROM CYLINDER HEAD REAR COVER**

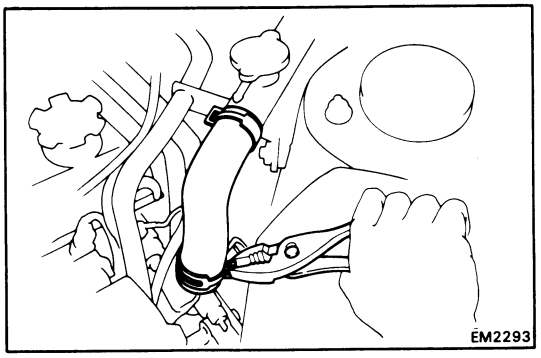

10. **DISCONNECT NO. 1 RADIATOR HOSE FROM WATER OUTLET HOUSING**

11. **REMOVE PCV HOSE**

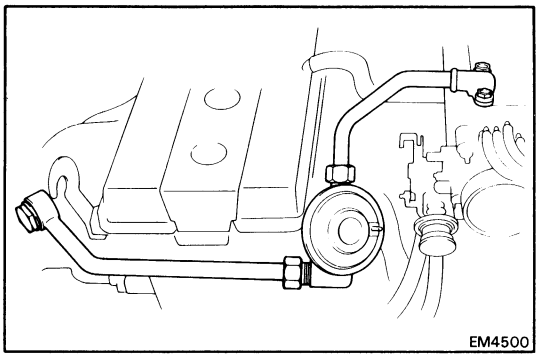

12. REMOVE EGR VALVE WITH PIPES

(a) Remove the EGR vacuum modulator and bracket.

(b) Remove the accelerator cable clamp from the engine hanger.

(c) Remove the union bolt, four bolts and EGR valve with pipes and gaskets.

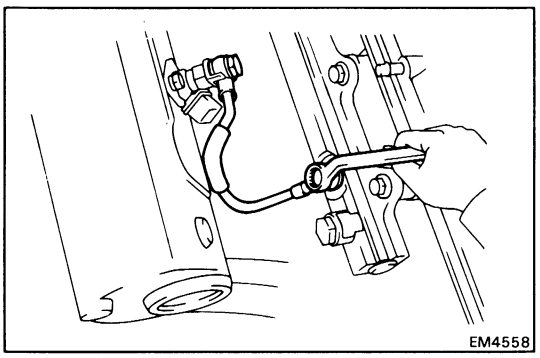

13. REMOVE COLD START INJECTOR PIPE

(a) Disconnect the cold start injector connector.

(b) Remove the two union bolts, cold start injector pipe and four gaskets.

NOTE: Slowly loosen the union bolts.

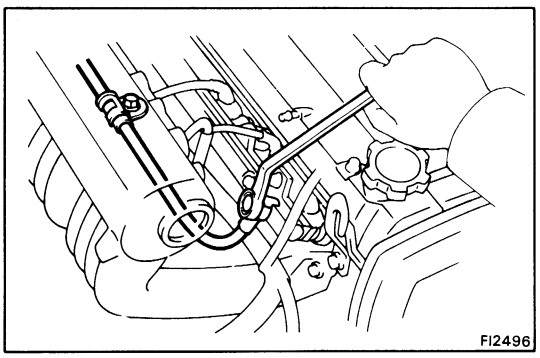

14. REMOVE NO. 1 FUEL PIPE

(a) Remove the union bolt and two gaskets, and disconnect the No. 1 fuel pipe from the delivery pipe.

(b) Remove the two bolts and disconnect the No. 1 fuel pipe from the intake manifold and cylinder head rear cover.

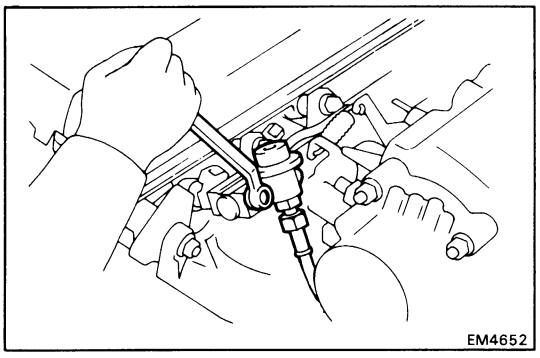

15. REMOVE PRESSURE REGULATOR

(a) Disconnect the vacuum hose.

(b) Disconnect the fuel hose from the No. 2 fuel pipe.

(c) Remove the bolt, and disconnect the No. 2 fuel pipe from the cylinder head rear cover.

(d) Remove the two bolts and pressure regulator with the No. 2 fuel pipe.

16. DISCONNECT HIGH-TENSION CORDS FROM IGNITION COIL

17. DISCONNECT NO. 2 AND NO. 3 WATER BY-PASS HOSES FROM AUXILIARY AIR VALVE

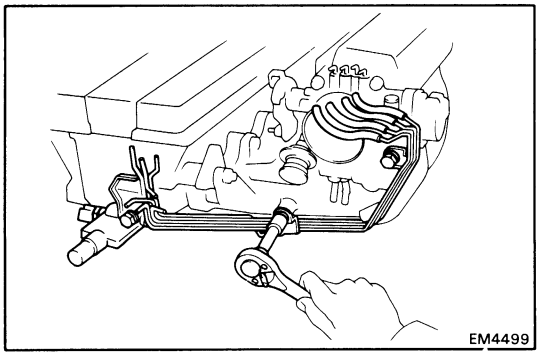

18. REMOVE VACUUM PIPE AND CYLINDER HEAD REAR COVER

(a) Disconnect the water temp. sensor connector.

(b) (w/ A/C)
Disconnect the water temp. switch connector.

(c) Remove the vacuum hoses from the vacuum pipe.

(d) Remove the four bolts, vacuum pipe, cylinder head rear cover and wire clamp.

19. DISCONNECT FOLLOWING CONNECTORS AND WIRES:

- Engine compartment wire connector from the engine compartment main wire
- Cold start injector time switch connector
- Engine compartment cooling fan temp. sensor connector
- Throttle position sensor connector
- (w/ A/C)
  VSV connector (for pressure regulator)
- Injector connectors
- Ground strap from intake manifold
- Two igniter connectors
- Ground strap (between cylinder head and body)
- Noise filter connector
- Engine compartment cooling fan motor connector
- EGR gas temperature sensor connector (Calif. only)
- Water temp. sender gauge connector
- (w/ A/C)
  Compressor connector
- Oil pressure sender gauge connector
- Starter wire and connector
- VSV connector (for T-VIS)
- Alternator wire and connector

20. LAY WIRE HARNESS TO ONE SIDE WITHOUT DISCONNECTING IT FROM ENGINE

21. REMOVE DISTRIBUTOR

22. (w/ A/C)
REMOVE A/C DRIVE BELT AND IDLER PULLEY

23. REMOVE DRIVE BELT AND WATER PUMP PULLEY
(See page EM-15)

24. REMOVE FRONT EXHAUST PIPE
(See page LU-5)

25. REMOVE EXHAUST MANIFOLD

(a) Remove the six bolts and upper heat insulator.

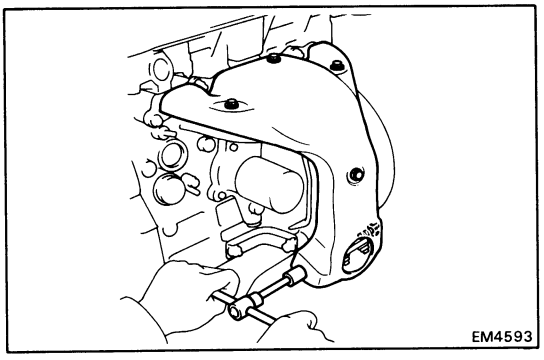
EM4593

(b) Remove the bolt, nut and manifold stay.

(c) Remove the three bolts, two nuts exhaust manifold and gasket.

(d) Remove the three bolts and lower insulator.

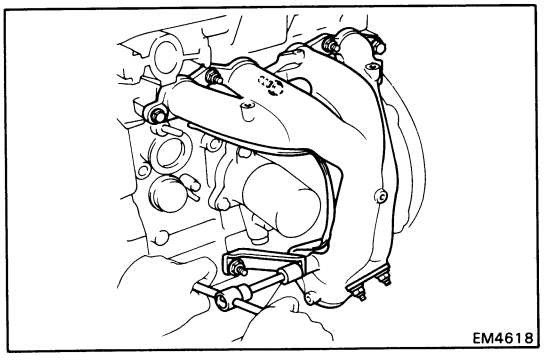
EM4618

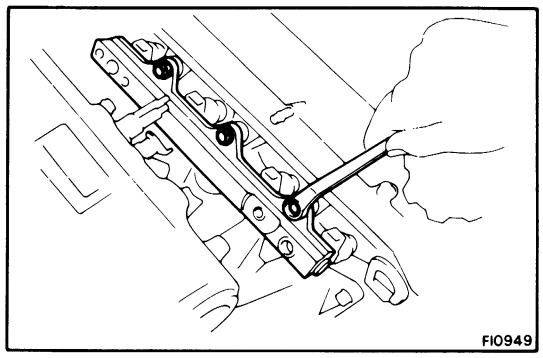

26. REMOVE DELIVERY PIPE WITH INJECTORS

(a) Remove the three bolts, and then remove the delivery pipe with the injectors.

NOTE: When removing the delivery pipe, be careful not to drop the injectors.

(b) Remove the four insulators and three spacers from the cylinder head.

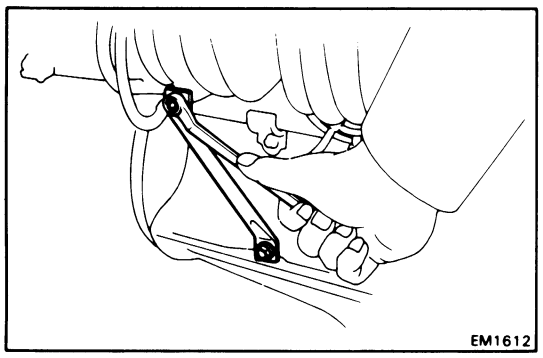

27. REMOVE INTAKE MANIFOLD AND INTAKE AIR CONTROL VALVE

(a) Remove the manifold stay.

(b) Disconnect the vacuum hose from the intake air control valve.

(c) Remove the two bolts and VSV with vacuum tank.

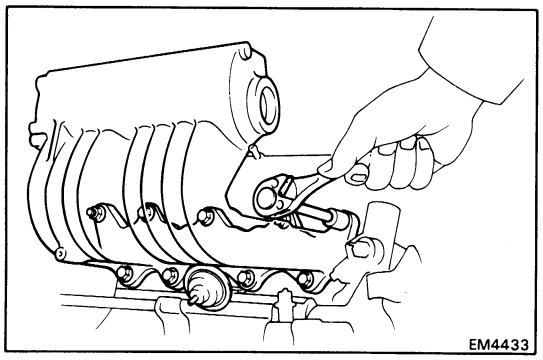

(d) Remove the two nuts and seven bolts.

(e) Remove the manifold and air control valve with the gaskets.

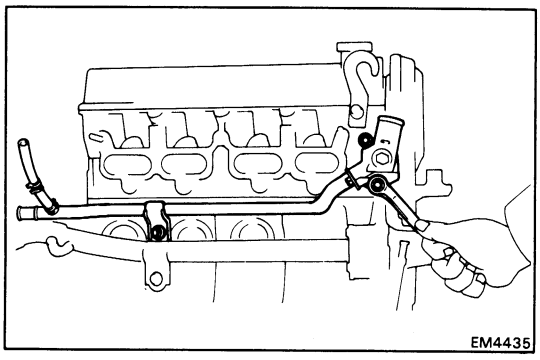

28. REMOVE WATER OUTLET WITH NO. 1 BY-PASS PIPE AND DRIVE BELT ADJUSTING BAR

(a) Disconnect the water by-pass hose.

(b) Remove the three bolts, water outlet with the No. 1 by-pass pipe, drive belt adjusting bar and gasket.

29. REMOVE CYLINDER HEAD COVERS
(See steps 19 to 22 on page EM-18)

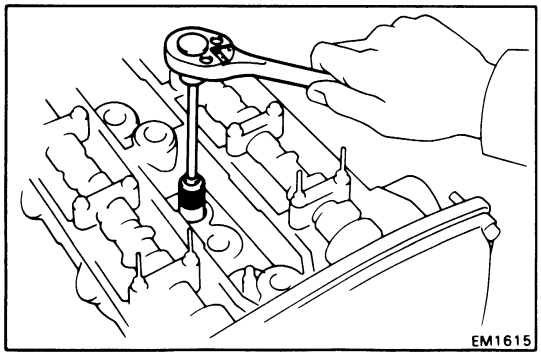

30. REMOVE SPARK PLUGS

Using plug wrench (16 mm), remove the spark plugs.

31. INSPECT VALVE CLEARANCE
(See page EM-7)

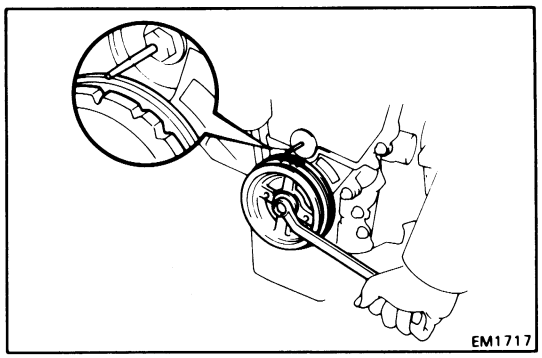

32. SET NO. 1 CYLINDER TO TDC/COMPRESSION

(a) Turn the crankshaft pulley and align its groove with the idler pulley bolt.

(b) Check that the valve lifters on the No. 1 cylinder are loose. If not, turn the crankshaft pulley one complete revolution.

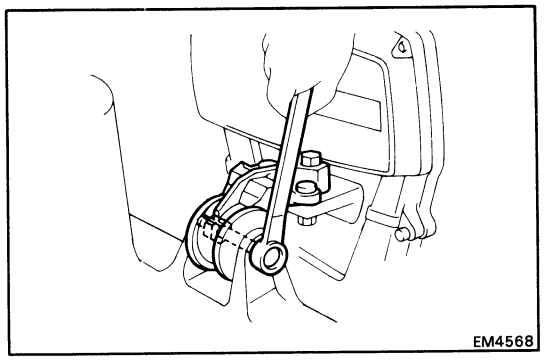

33. REMOVE RH ENGINE MOUNTING INSULATOR

(a) Slightly raise the engine with a jack.

NOTE: Place a wooden block between the jack and engine.

(b) Remove the mounting through bolt.

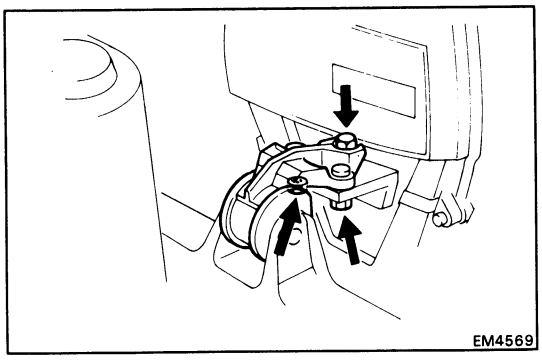

(c) Remove the two nuts, bolt and RH engine mounting insulator.

34. REMOVE CRANKSHAFT PULLEY
(See step 9 on page EM-16)

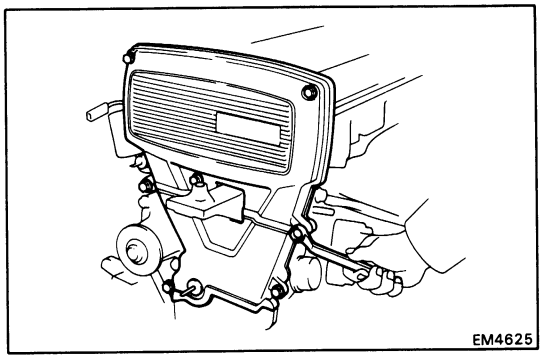

35. REMOVE NO. 3 AND NO. 2 TIMING BELT COVERS WITH GASKETS

Remove the seven bolts, No. 3 and No. 2 timing belt covers.

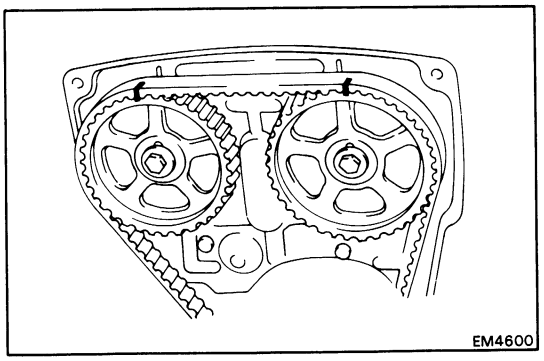

36. REMOVE TIMING BELT FROM CAMSHAFT TIMING PULLEYS

(a) Place matchmarks on the camshaft timing pulleys and belt.

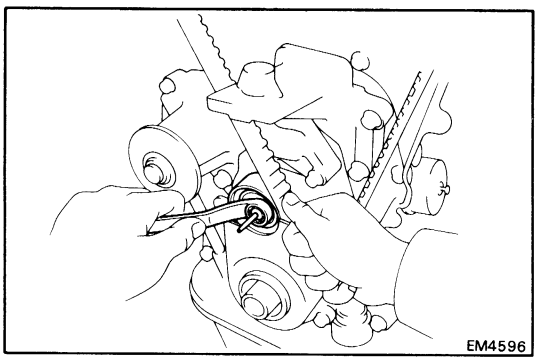

(b) Loosen the idler pulley bolt, push it left as far as it will go and then temporarily tighten it.

(c) Remove the timing belt from the camshaft timing pulleys.

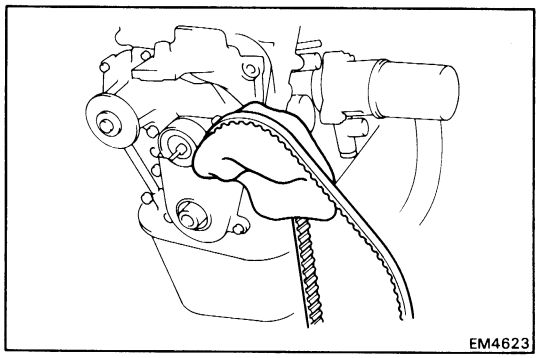

NOTE:

- Support the belt so the meshing of the crankshaft timing pulley and timing belt does not shift.
- Be careful not to drop anything inside the timing belt cover.
- Do not allow the belt to come into contact with oil, water or dust.

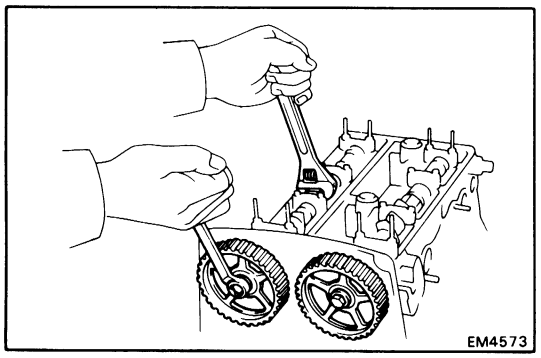

37. REMOVE CAMSHAFT TIMING PULLEYS

Secure the hexagonal portion of the camshaft, remove the bolt, plate washer and pulley.
Remove the two camshaft pulleys.

CAUTION: Be careful not to damage the cylinder head with the wrench.

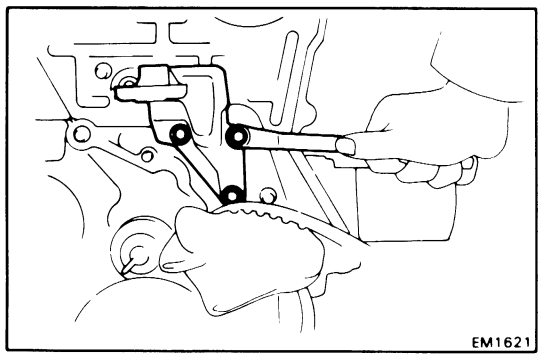

38. REMOVE RH MOUNTING BRACKET

Remove the three bolts and bracket.

39. REMOVE NO. 4 TIMING BELT COVER

Remove the seven bolts and No. 4 timing belt cover.

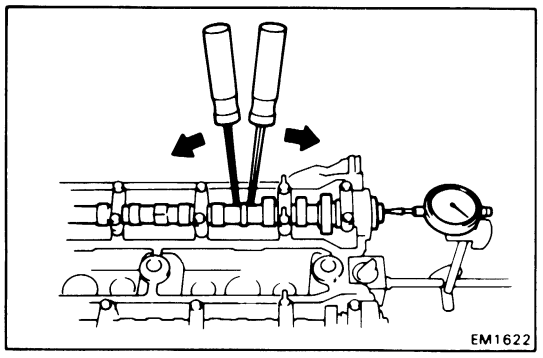

40. INSPECT CAMSHAFT THRUST CLEARANCE

Using a dial indicator, measure the thrust clearance while moving the camshaft back and forth.

Standard clearance: 0.08 – 0.19 mm (0.0031 – 0.0075 in.)
Maximum clearance: 0.30 mm (0.0118 in.)

If clearance is greater than maximum, replace the camshaft and/or cylinder head.

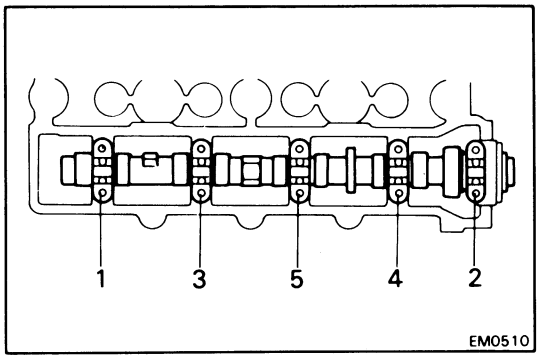

41. REMOVE CAMSHAFTS

(a) Uniformly loosen and remove the bearing cap bolts in several passes, in the sequence shown.

(b) Remove the bearing caps, oil seal and camshaft.

NOTE: Arrange the intake and exhaust camshafts.

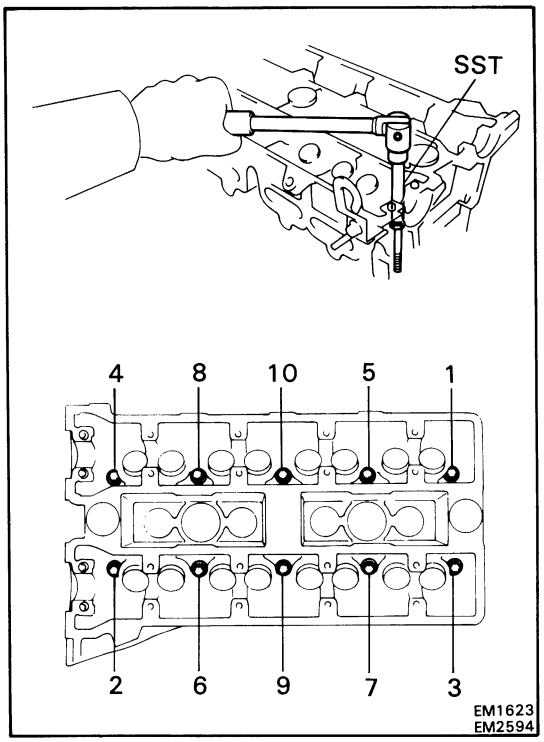

42. REMOVE CYLINDER HEAD

(a) Using SST, uniformly loosen and remove the ten cylinder head bolts in several passes, in the sequence shown.

SST 09205-16010

CAUTION: Head warpage or cracking could result from removing bolts in incorrect order.

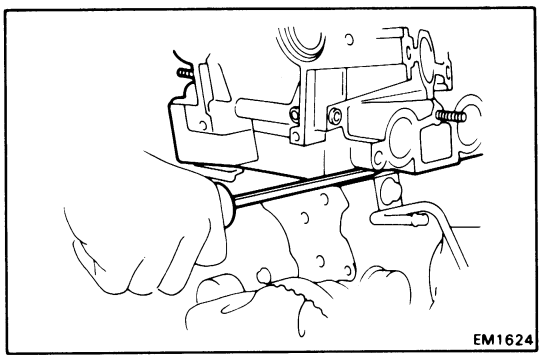

(b) Lift the cylinder head from the dowels on the cylinder block and place the head on wooden blocks on a bench.

NOTE: If the cylinder head is difficult to lift off, pry with a screwdriver between the cylinder head and block saliences.

CAUTION: Be careful not to damage the cylinder head and cylinder block surfaces of cylinder head gasket side.

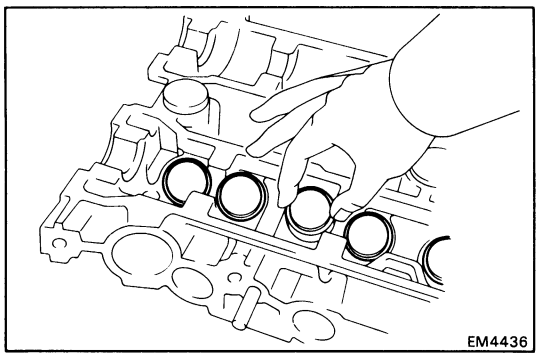

DISASSEMBLY OF CYLINDER HEAD

(See page EM-26)

1. REMOVE VALVE LIFTERS AND SHIMS

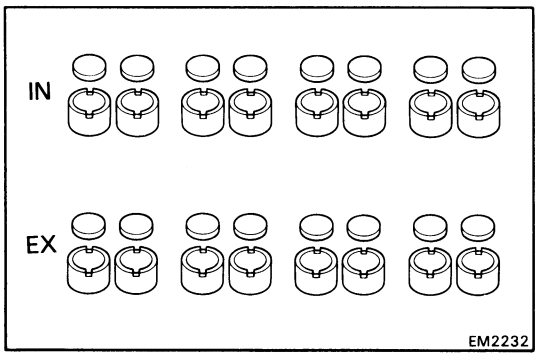

NOTE: Arrange the valve lifters and shims in correct order.

2. REMOVE GROUND STRAP AND RH ENGINE HANGER

3. REMOVE ENGINE ROOM TEMP. SENSOR BRACKET AND LH ENGINE HANGER

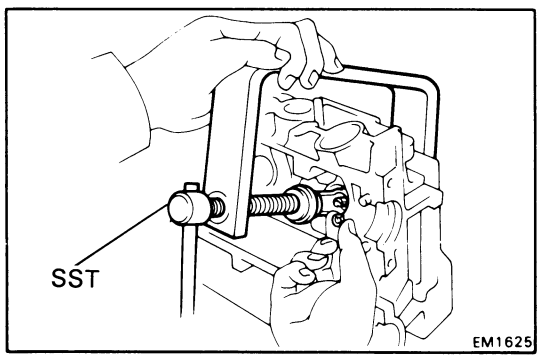

4. REMOVE VALVES

(a) Using SST, compress the valve spring and remove the two keepers.

SST 09202-70010

(b) Remove the spring retainer, valve spring, valve and spring seat.

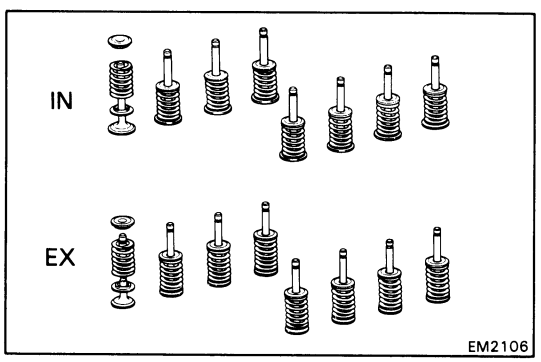

NOTE: Arrange the valves, valve springs, spring seats and spring retainers in correct order.

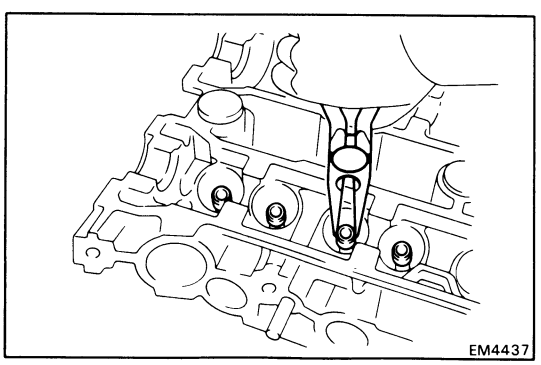

(c) Using needle-nose pliers, remove the oil seal.

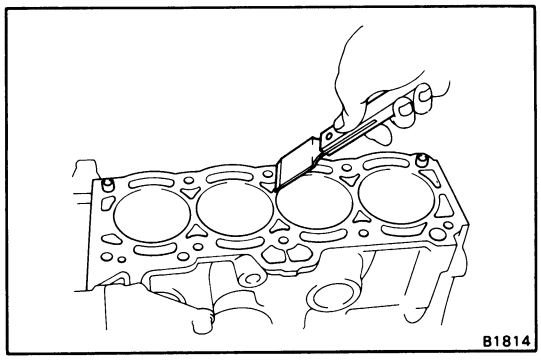

INSPECTION, CLEANING AND REPAIR OF CYLINDER HEAD COMPONENTS

1. CLEAN TOP OF PISTONS AND TOP OF BLOCK

(a) Turn the crankshaft and bring each piston to top dead center (TDC). Using a gasket scraper, remove all the carbon from the piston top.

(b) Remove all the gasket material from the top of the cylinder block.

(c) Using compressed air, blow carbon and oil from the bolt holes.

WARNING: Protect your eyes when using high pressure air.

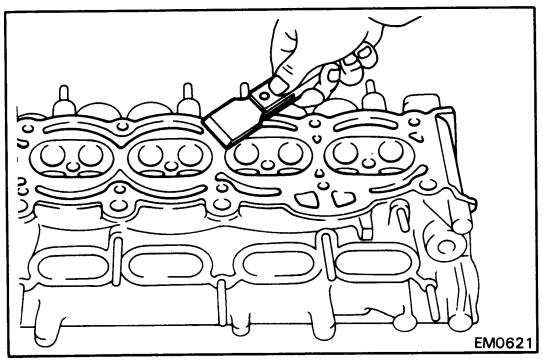

2. REMOVE GASKET MATERIAL

Using a gasket scraper, remove all gasket material from the head and manifold surfaces.

CAUTION: Be careful not to scratch the surfaces.

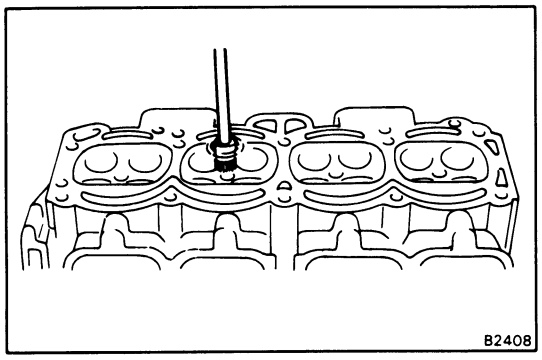

3. CLEAN COMBUSTION CHAMBER

Using a wire brush, remove all the carbon from the combustion chambers.

CAUTION: Be careful not to scratch the head gasket contact surfaces.

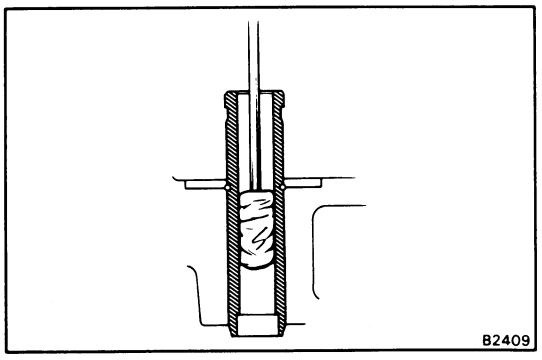

4. CLEAN VALVE GUIDE BUSHINGS

Using a valve guide brush and solvent, clean all the valve guide bushings.

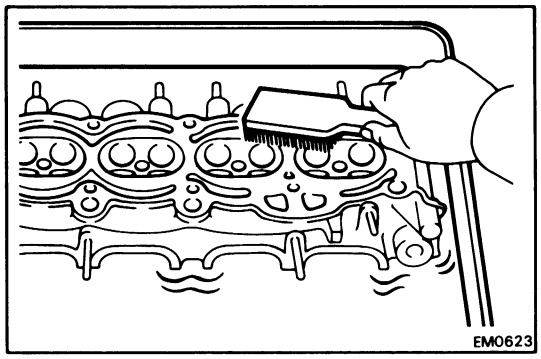

5. CLEAN CYLINDER HEAD

Using a soft brush and solvent, throughly clean the head.

CAUTION: Do not clean the head in a hot tank as this would seriously damage it.

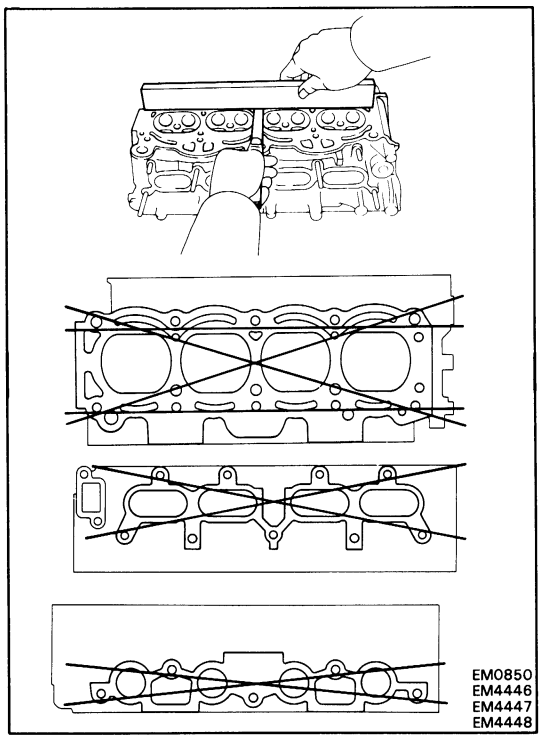

6. INSPECT CYLINDER HEAD FOR FLATNESS

Using a precision straight edge and feeler gauge, measure the surfaces contacting the cylinder block and manifold for warpage.

Maximum surface warpage:

Cylinder block side	**0.05 mm (0.0020 in.)**
Intake manifold side	**0.05 mm (0.0020 in.)**
Exhaust manifold side	**0.10 mm (0.0039 in.)**

If warpage is greater than maximum, replace the cylinder head.

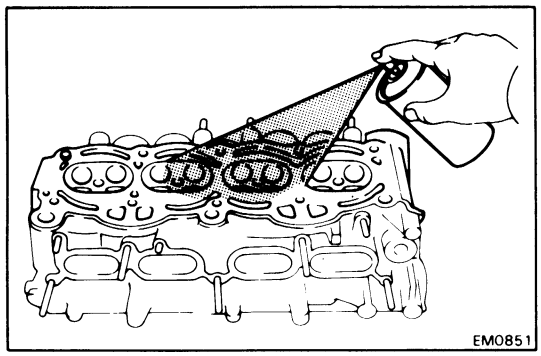

7. INSPECT CYLINDER HEAD FOR CRACKS

Using a dye penetrant, check the combustion chamber, intake and exhaust ports, head surface and the top of the head for cracks.

If a crack is found, replace the head.

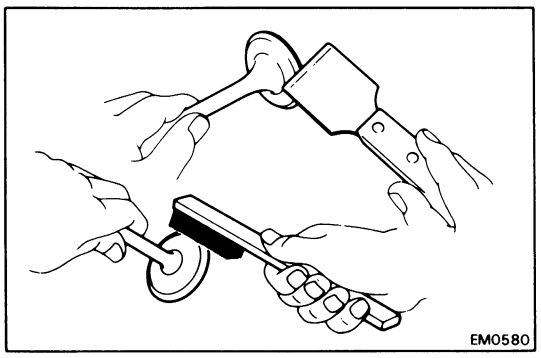

8. CLEAN VALVES

(a) Using a gasket scraper, chip any carbon from the valve.

(b) Using a wire brush, throughly clean the valve.

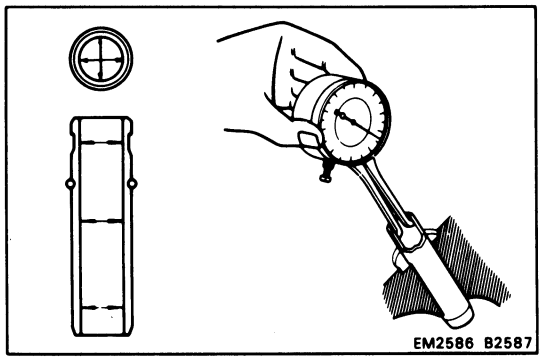

9. INSPECT VALVE STEM AND GUIDE BUSHINGS

(a) Using a caliper gauge, measure the inside diameter of the guide bushing.

Bushing inside diameter:
6.010 – 6.030 mm (0.2366 – 0.2374 in.)

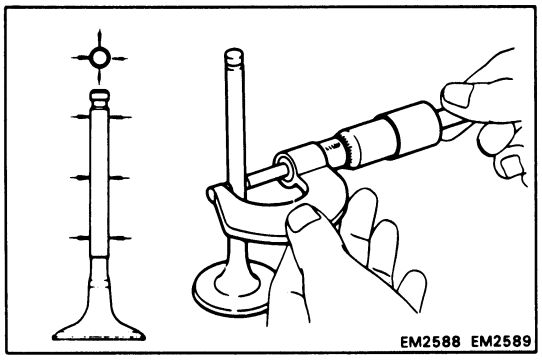

(b) Using a micrometer, measure the diameter of the valve stem.

Valve stem diameter

Intake	**5.970 – 5.985 mm (0.2350 – 0.2356 in.)**
Exhaust	**5.965 – 5.980 mm (0.2348 – 0.2354 in.)**

(c) Subtract the valve stem measurement from the valve guide bushing measurement.

Standard stem oil clearance:

Intake	**0.025 – 0.060 mm (0.0010 – 0.0024 in.)**
Exhaust	**0.030 – 0.065 mm (0.0012 – 0.0026 in.)**

Maximum stem oil clearance:

Intake	**0.08 mm (0.0031 in.)**
Exhaust	**0.10 mm (0.0039 in.)**

If the clearance more than maximum, replace the valve and guide bushing.

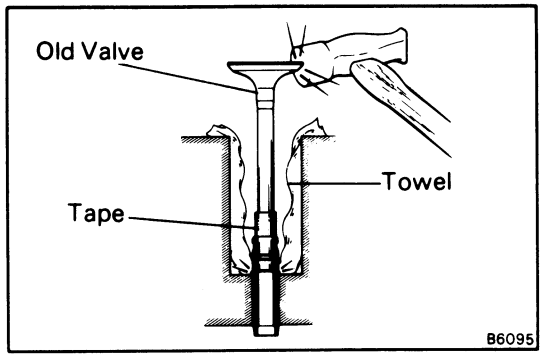

10. IF NECESSARY, REPLACE VALVE GUIDE BUSHING

(a) Insert an old valve wrapped with tape into the valve guide bushing and break off the valve guide bushing by hitting it with a hammer.

CAUTION: Be careful not to damage the liter port.

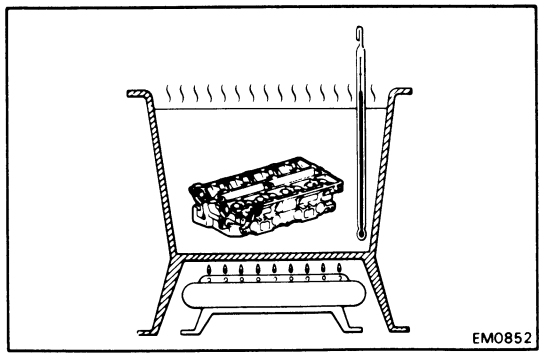

(b) Gradually heat the cylinder head to 80 – 100°C (176 – 212°F).

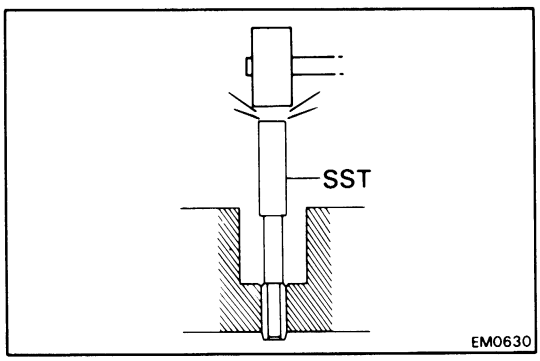

(c) Using SST and a hammer, drive out the valve guide bushing.

SST 09201-70010

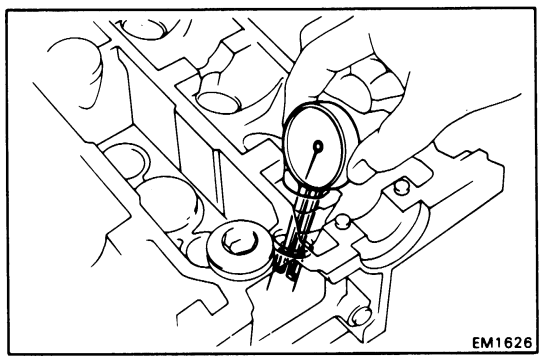

(d) Using a caliper gauge, measure the valve guide bore of the cylinder head.

Standard valve guide bore (cold):
11.000 – 11.027 mm (0.4331 – 0.4341 in.)

(e) Select a new guide bushing (STD size or O/S 0.05).

If the bushing bore diameter of the cylinder head is greater than 11.027 mm (0.4341 in.), machine the bushing bore to the following dimension:

Rebored cylinder head bushing bore dimension:
11.050 – 11.077 mm (0.4350 – 0.4361 in.)

If the bushing bore diameter of the cylinder head is greater than 11.077 mm (0.4361 in.), replace the cylinder head.

Both intake and exhaust

Bushing bore mm (in.)	Bushing size
11.000 – 11.027 (0.4331 – 0.4341)	Use STD
Over 11.027 (0.4341)	Use O/S 0.05

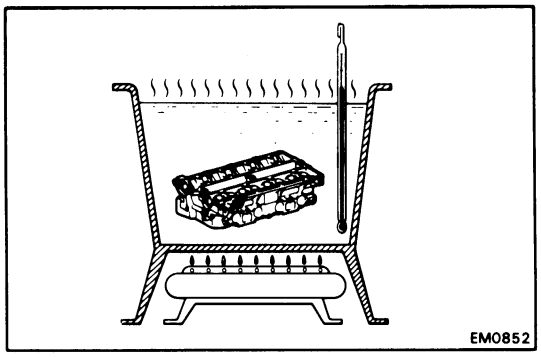

(f) Gradually heat the cylinder head to 80 – 100°C (176 – 212°F).

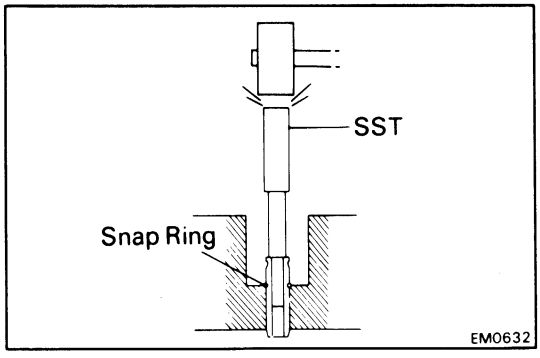

(g) Using SST and a hammer, drive in a new valve guide bushing until the snap ring makes contact with the cylinder head.

SST 09201-70010

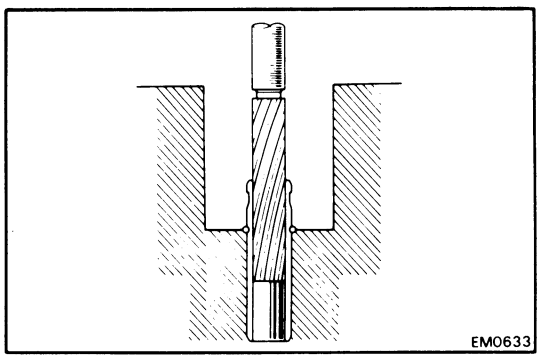

(h) Using a sharp 6 mm reamer, ream the valve guide bushing to obtain specified clearance between the valve guide bushing and new valve stem.

Intake clearance: 0.025 – 0.060 mm (0.0010 – 0.0024 in.)
Exhaust clearance: 0.030 – 0.065 mm (0.0012 – 0.0026 in.)

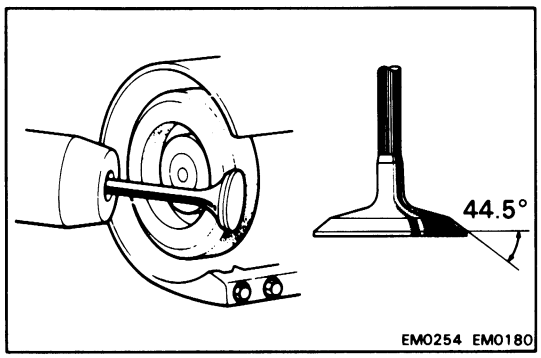

11. INSPECT AND GRIND VALVES

(a) Grind the valve enough only to remove pits and carbon.

(b) Check that the valve is ground at the correct valve face angle.

Valve face angle: 44.5°

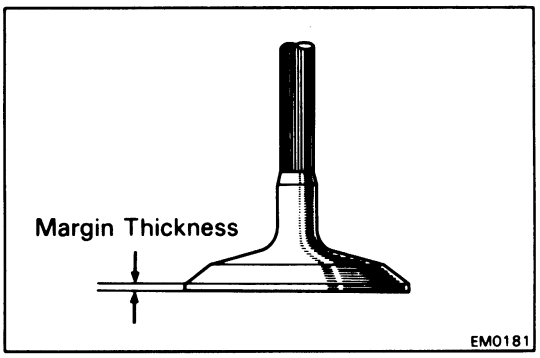

(c) Check the valve head margin thickness.

Standard margin thickness: 0.8 – 1.2 mm (0.031 – 0.047 in.)
Minimum margin thickness: 0.5 mm (0.020 in.)

If the margin thickness is less than minimum, replace the valve.

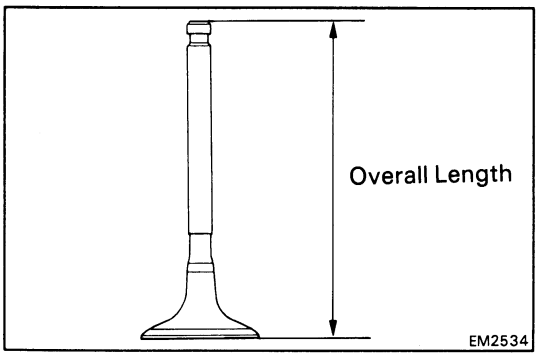

(d) Check the valve overall length.

Standard overall length:
Intake 99.60 mm (3.9213 in.)
Exhaust 99.75 mm (3.9272 in.)

Minimum overall length:
Intake 99.10 mm (3.9016 in.)
Exhaust 99.25 mm (3.9075 in.)

If the valve overall length is less than minimum, replace the valve.

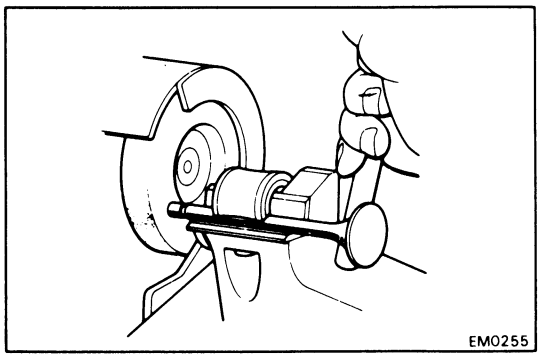

(e) Check the surface of the valve stem tip for wear.

If the valve stem tip is worn, regrind it with grinder or replace the valve if necessary.

CAUTION: Do not grind off more than the minimum overall length (See above).

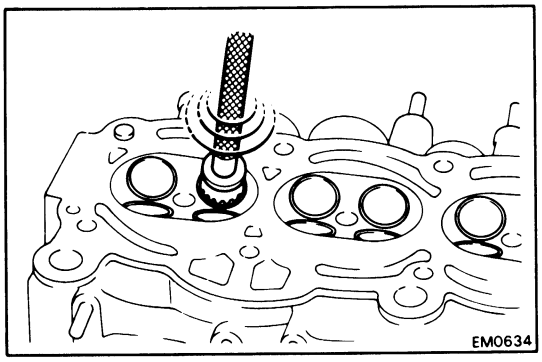

12. INSPECT AND CLEAN VALVE SEATS

(a) Using a 45° carbide cutter, resurface the valve seats. Remove only enough metal to clean the seats.

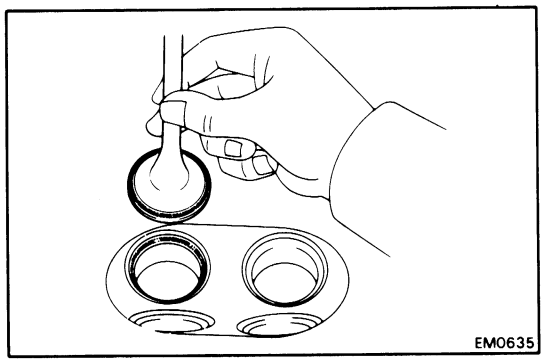

(b) Check the valve seating position.

Apply a thin coat of prussian blue (or white lead) to the valve face. Install the valve. Lightly press the valve against the seat. Do not rotate the valve.

(c) Check the valve face and seat for the following.

- If blue appears 360° around the face, the valve is concentric. If not, replace the valve.
- If blue appears 360° around the valve seat, the guide and seat are concentric. If not, resurface the seat.
- Check that the seat contact is on the middle of the valve face with the following width.

  1.0 – 1.4 mm (0.039 – 0.055 in.)

If not, correct the valve seat as follows:

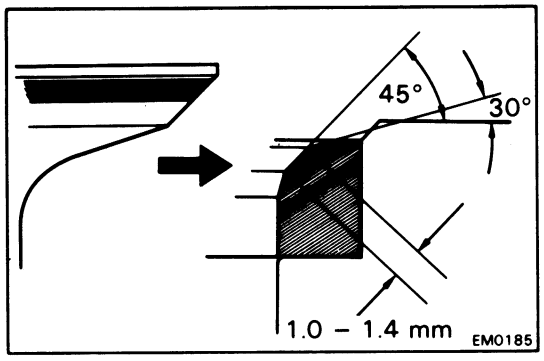

(1) If seating is too high on the valve face use 30° and 45° cutters to correct the seat.

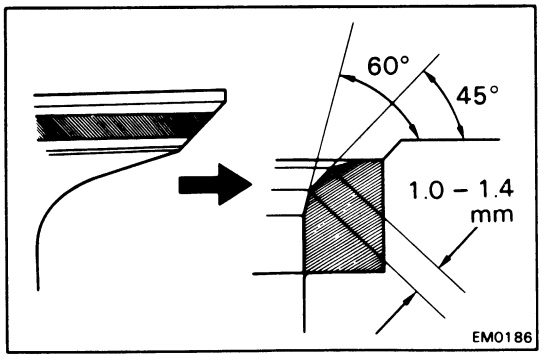

(2) If seating is too low on the valve face, use 60° and 45° cutters to correct the seat.

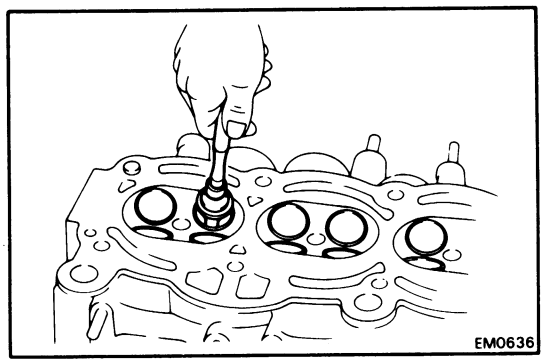

(d) Hand-lap the valve and valve seat with an abrasive compound.

(e) Clean the valve and valve seat after hand-lapping.

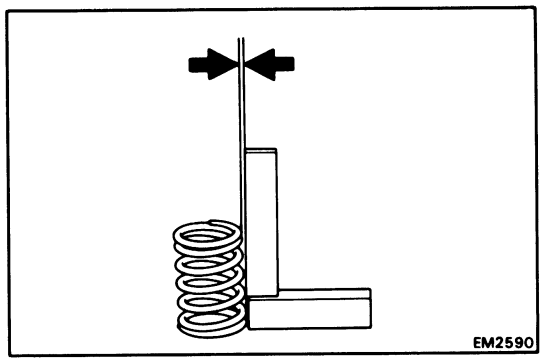

13. INSPECT VALVE SPRINGS

(a) Using a steel square, measure the squareness of the valve springs.

Maximum squareness: 1.8 mm (0.071 in.)

If squareness is greater than maximum, replace the valve spring.

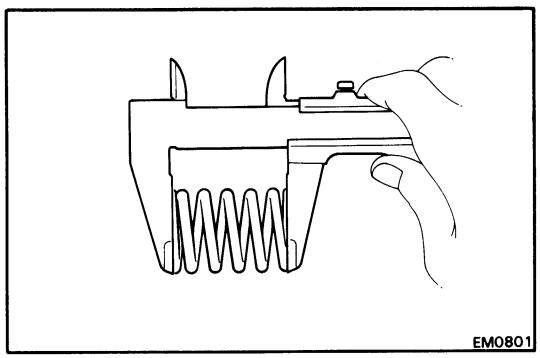

(b) Using calipers, measure the free length of the valve spring.

Free length: 41.09 mm (1.6177 in.)

If the free length is not as specified, replace the valve spring.

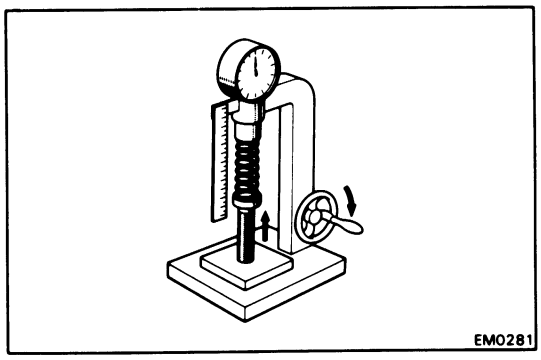

(c) Using a spring tester, measure the tension of the valve spring at the specified installed length.

Installed tension:
14.6 – 17.0 kg (32.2 – 37.5 lb, 143 – 167 N)
at 34.7 mm (1.366 in.)

If the installed tension is not as specified, replace the valve spring.

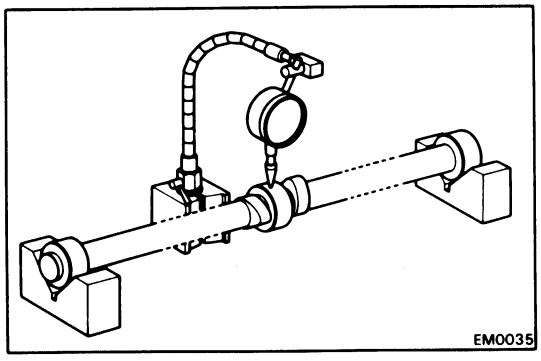

14. INSPECT CAMSHAFT AND BEARING CAPS

(a) Place the camshaft on V-blocks and, using a dial indicator, measure the circle runout at the center journal.

Maximum circle runout: 0.04 mm (0.0016 in.)

If the circle runout is greater than the maximum, replace the camshaft.

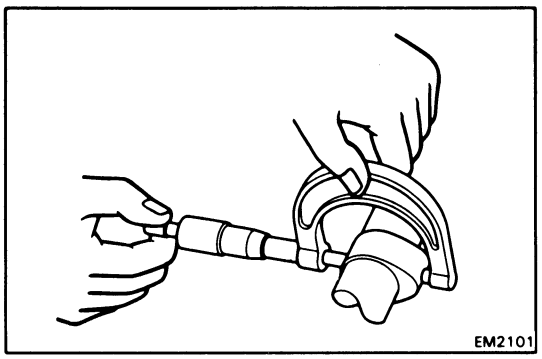

(b) Using a micrometer, measure the cam lobe height.

Standard cam lobe height: 35.410 – 35.510 mm (1.3823 – 1.3980 in.)

Minimum lobe height: 35.11 mm (1.3823 in.)

If the cam lobe height is less than minimum, replace the camshaft.

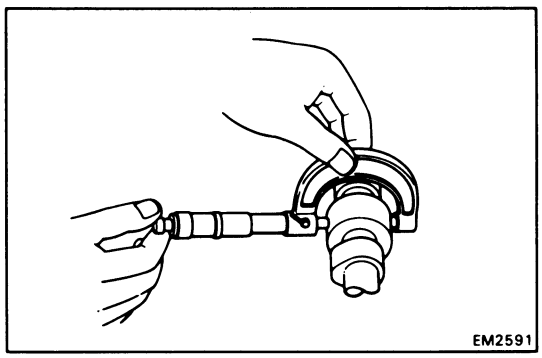

(c) Using a micrometer, measure the journal diameter.

Standard diameter: 26.949 – 26.965 mm (1.0610 – 1.0616 in.)

If the journal diameter is less than specified, replace the camshaft.

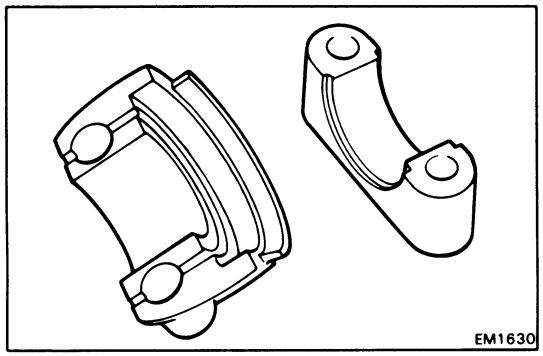

(d) Check the bearings for flaking or scoring.

If bearings are damaged, replace the cylinder head and camshaft.

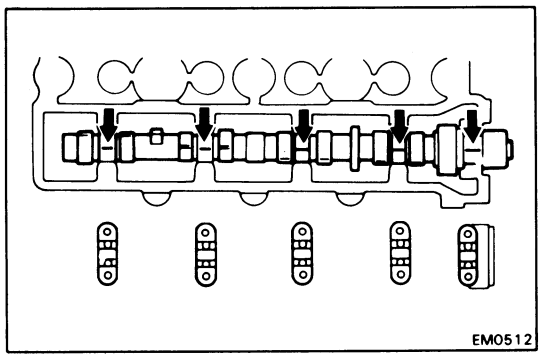

15. INSPECT CAMSHAFT OIL CLEARANCE

(a) Clean the bearing caps and camshaft journal.

(b) Place the camshaft in the cylinder head.

(c) Lay a strip of Plastigage across each journal.

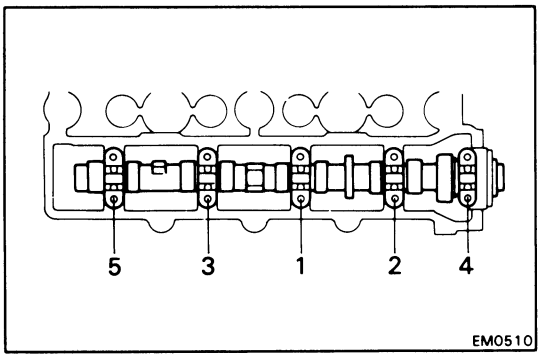

(d) Install the bearing caps.
(See step 2 on page EM-47)

Torque: 130 kg-cm (9 ft-lb, 13 N·m)

NOTE: Do not turn the camshaft.

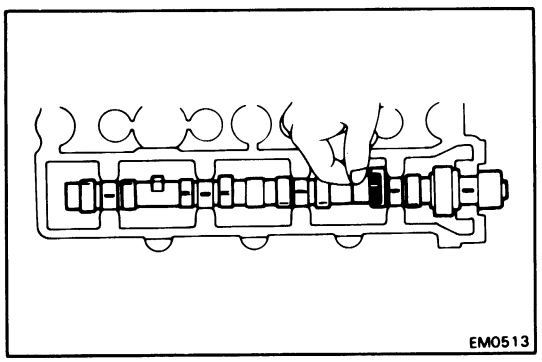

(e) Remove the bearing caps.

(f) Measure the Plastigage at its widest point.

Standard oil clearance: 0.035 – 0.072 mm (0.0014 – 0.0028 in.)

Maximum oil clearance: 0.10 mm (0.0039 in.)

If the oil clearance is greater than maximum, replace the camshaft. If necessary, replace the bearing caps and cylinder head as a set.

(g) Completely remove the Plastigage.

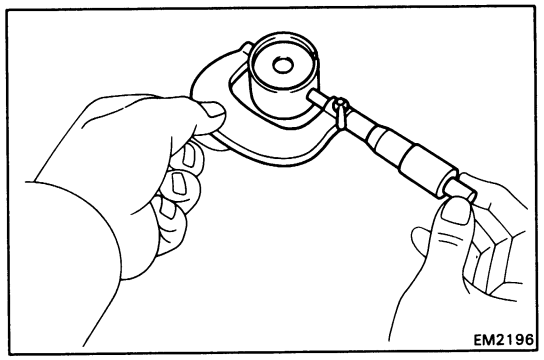

16. INSPECT VALVE LIFTERS AND LIFTER BORES

(a) Using a micrometer, measure the lifter diameter.

Lifter diameter: 27.975 – 27.985 mm (1.1014 – 1.1018 in.)

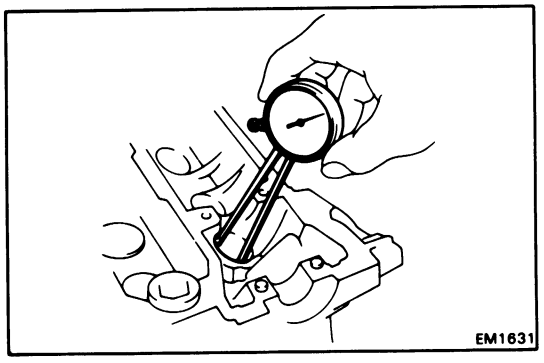

(b) Using a caliper gauge, measure the lifter bore diameter of the cylinder head.

Lifter bore diameter: 28.000 – 28.021 mm (1.1024 – 1.1032 in.)

(c) Subtract the lifter diameter measurement from the lifter bore diameter measurement.

Standard oil clearance: 0.015 – 0.046 mm (0.0006 – 0.0018 in.)

Maximum oil clearance: 0.10 mm (0.0039 in.)

If the oil clearance is greater than maximum, replace the lifter. If necessary, replace the cylinder head.

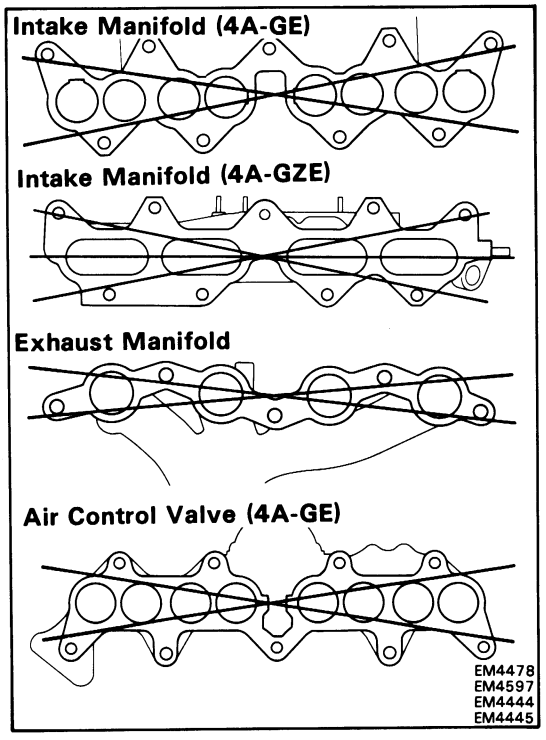

17. INSPECT INTAKE, EXHAUST MANIFOLDS AND AIR CONTROL VALVE

Using a precision straight edge and feeler gauge, check the surfaces contacting the cylinder head or air control valve for warpage.

Maximum warpage:

Intake manifold	**0.05 mm (0.0020 in.)**
Exhaust manifold	**0.30 mm (0.0118 in.)**
Air control valve (4A-GE only)	**0.05 mm (0.0020 in.)**

If warpage is greater than maximum, replace the manifold or air control valve.

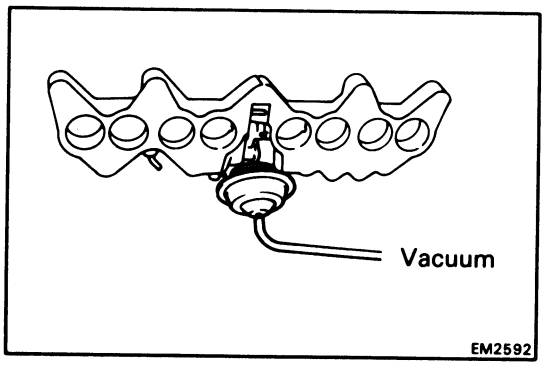

INSPECTION OF TOYOTA — VARIABLE INDUCTION SYSTEM (T-VIS)

1. INSPECT AIR CONTROL VALVE

(a) With 300 mmHg (11.81 in.Hg, 40.0 kPa) of vacuum applied to the actuator, check that the control valve moves smoothly to the fully closed position.

(b) With the vacuum released, check that the valve quickly fully opens.

If abnormal, replace the valve.

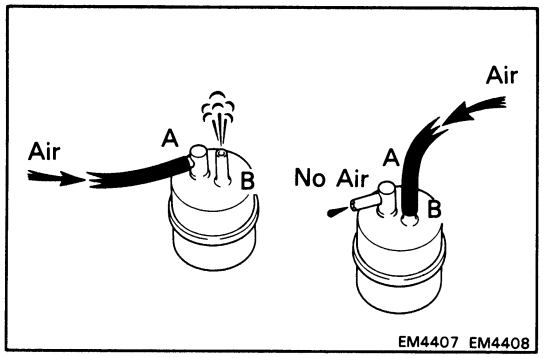

2. INSPECT VACUUM TANK

(a) Check that air flows from pipe A to B.

(b) Check that air does not flow from pipe B to A.

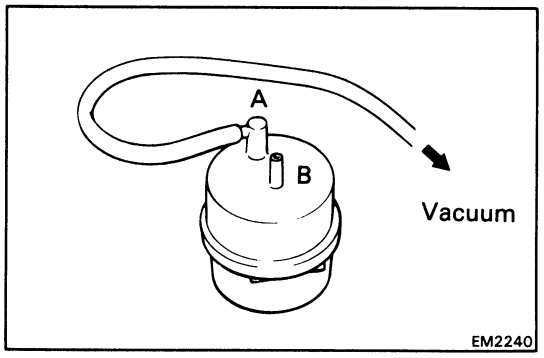

(c) Apply 500mmHg (19.69 in.Hg, 66.7 kPa) of vacuum to pipe A and check that there is no change in vacuum after one minute.

If there is change, replace the vacuum tank.

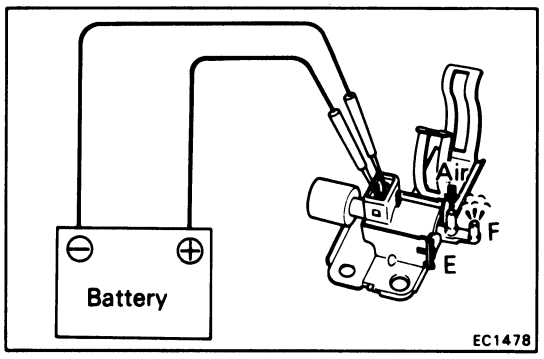

3. INSPECT VACUUM SWITCHING VALVE (VSV)

(a) Connect the VSV terminals to the battery terminals as illustrated.

(b) Blow into pipe E and check that air comes out of pipe F.

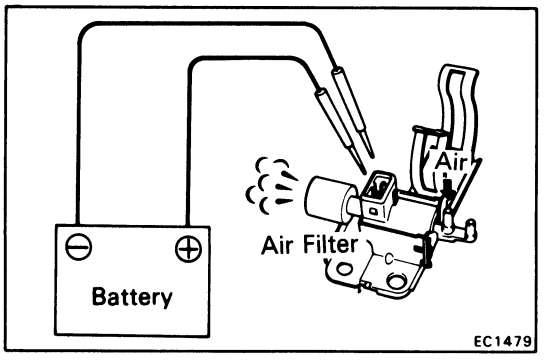

(c) Disconnect the battery.

(d) Blow into pipe E and check that air comes out of the air filter.

If a problem is found, replace the VSV.

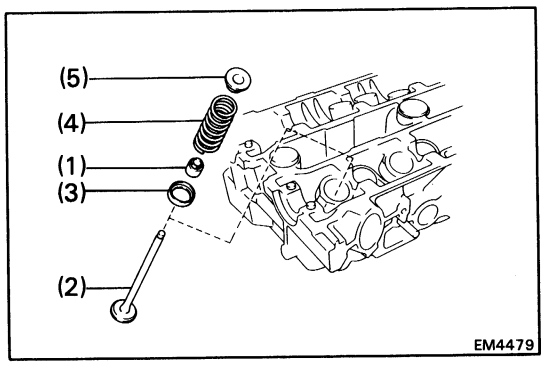

ASSEMBLY OF CYLINDER HEAD

(See page EM-26)

NOTE:
- Thoroughly clean all parts to be assembled.
- Before installing the parts, apply new engine oil to all sliding and rotating surfaces.
- Replace all gaskets and oil seals with new ones.

1. INSTALL VALVES

(a) Install the following parts:

(1) New oil seal
(2) Valve
(3) Spring seat
(4) Valve spring
(5) Spring retainer

CAUTION: Confirm the correct direction of the valve spring.

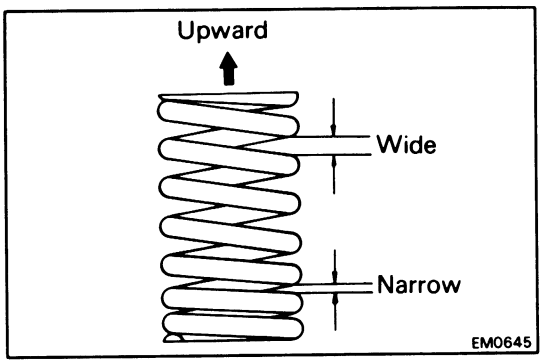

(b) Using SST, compress the valve spring and place the two keepers around the valve stem.

SST 09202-70010

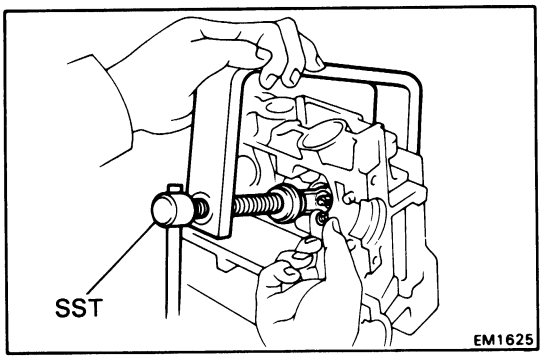

(c) Using a plastic-faced hammer, lightly tap the valve stem tip to assure proper fit.

2. INSTALL RH ENGINE HANGER AND GROUND STRAP

3. INSTALL LH ENGINE HANGER AND ENGINE ROOM TEMP. SENSOR BRACKET

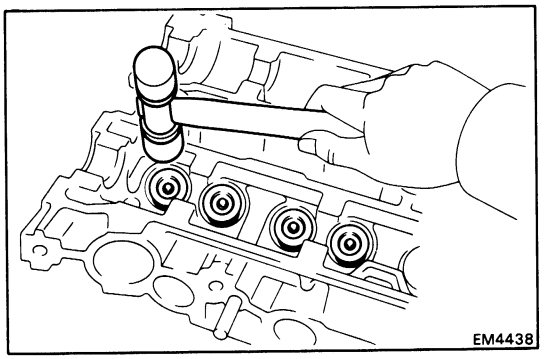

4. INSTALL VALVE LIFTERS AND SHIMS

(a) Install the valve lifter and shim.

(b) Check the valve lifter rotates smoothly by hand.

NOTE: Make sure the valve lifters with their shims are installed in the correct order.

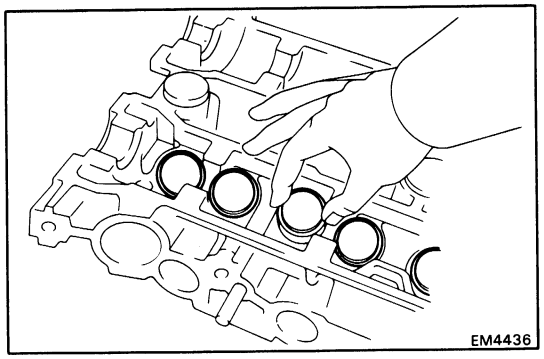

INSTALLATION OF CYLINDER HEAD

(See page EM-26)

1. INSTALL CYLINDER HEAD

NOTE:

- The cylinder head bolts are tighten in three progressive steps.
- If any of the bolts break or deform, replace them.

(a) Place a new cylinder head gasket in position on the cylinder block.

CAUTION: Be careful of the installation direction.

(b) Place the cylinder head in position on the cylinder head gasket.

(c) Apply a light coat of engine oil on the threads and under the heads of the cylinder head bolts.

(d) First, using SST, install and uniformly tighten the ten cylinder head bolts in several passes, in the sequence shown.

SST 09205-16010

Torque: 300 kg-cm (22 ft-lb, 29 N·m)

NOTE: Each bolt length is indicated in the figure.

If any one of the bolts not meet the torque specification, replace the bolt.

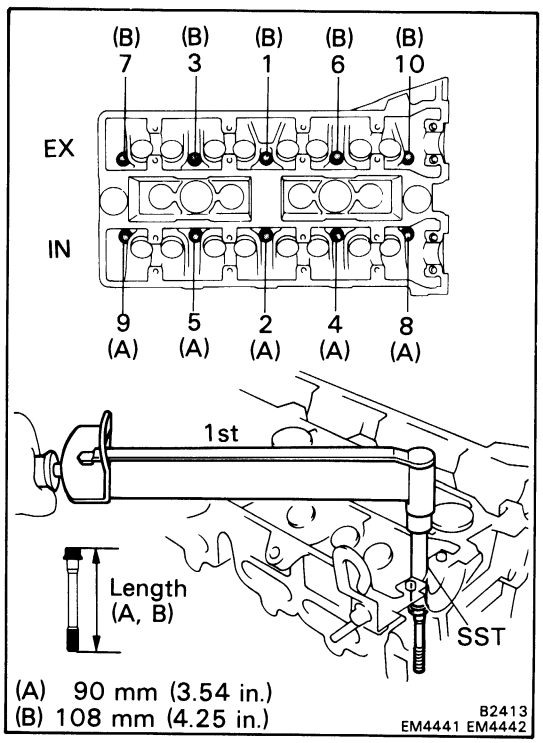

(e) Mark the front of the cylinder head bolt head with paint.

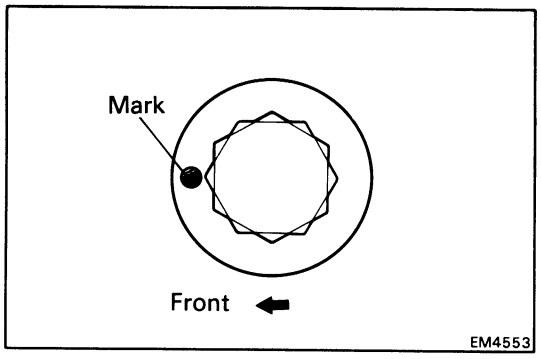

(f) Second, retighten the ten cylinder head bolts 90° in the numerical order shown.

(g) Third, retighten the ten cylinder head bolts by an additional 90°.

(h) Check that the paint mark is now facing rearward.

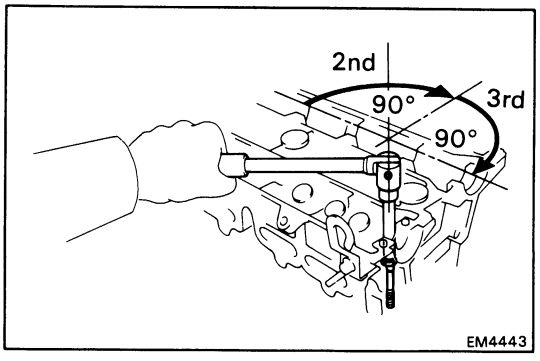

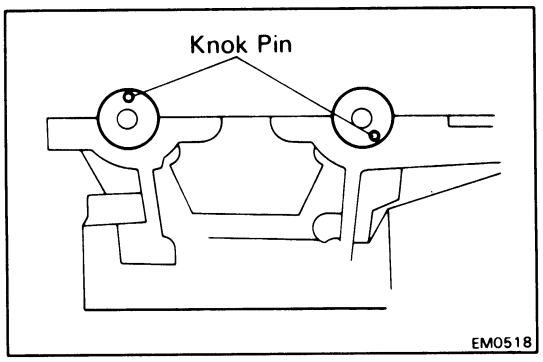

2. INSTALL CAMSHAFTS

(a) Place the camshafts in position on the cylinder head as shown in the figure.

NOTE: The exhaust camshaft has a distributor drive gear.

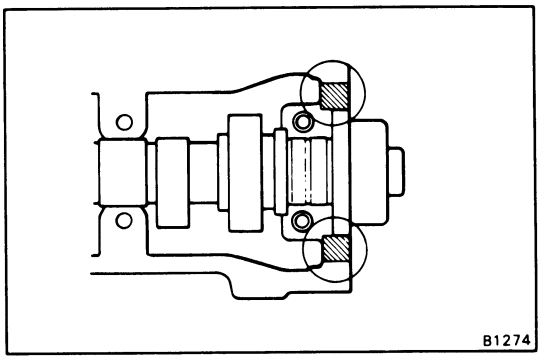

(b) Apply seal packing to the cylinder head as shown in the figure.

Seal packing: Part No. 08826-0080 or equivalent

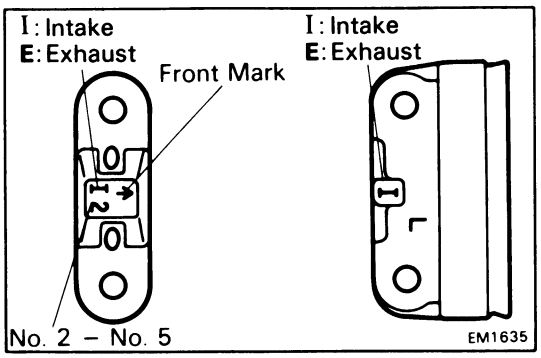

(c) Install the bearing caps in their proper locations.

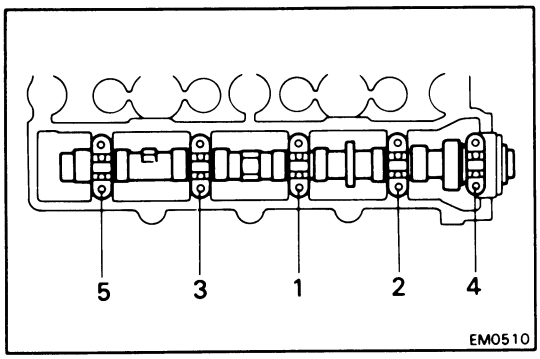

(d) Apply a light coat of engine oil on the threads and under the heads of the bearing cap bolts.

(e) Install and uniformly tighten the bearing cap bolts in several passes, in the sequence shown.

Torque: 130 kg-cm (9 ft-lb, 13 N·m)

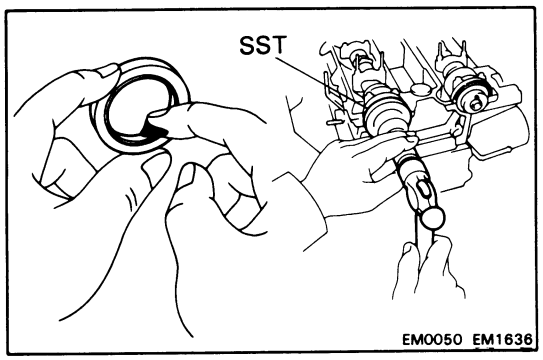

(f) Apply MP grease to new camshaft oil seals lip.

(g) Using SST, tap in the oil seal.

SST 09223-50010

NOTE: Be careful not to install the oil seal slantwise.

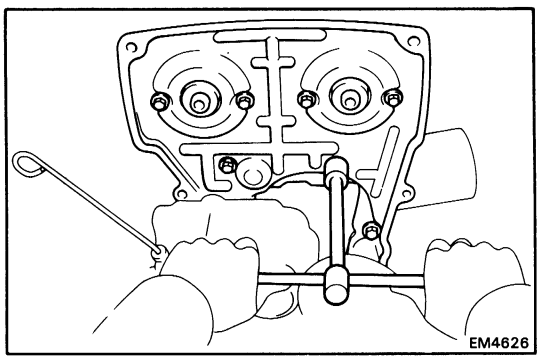

3. INSTALL NO. 4 TIMING BELT COVER

Install the belt cover with the seven bolts.

Torque: 95 kg-cm (82 in.-lb, 9.3 N·m)

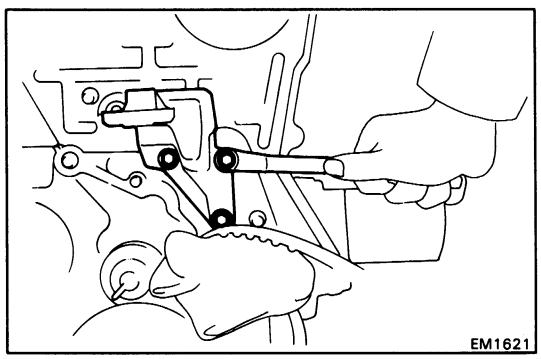

4. INSTALL RH MOUNTING BRACKET

Install the mounting bracket with the three bolts.

Torque: 400 kg-cm (29 ft-lb, 39 N·m)

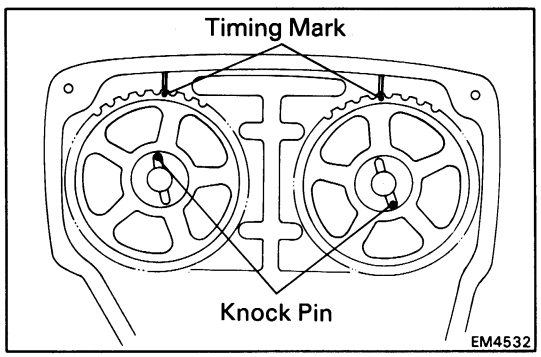

5. INSTALL CAMSHAFT TIMING PULLEYS

(a) Position the knock pin of the camshafts as shown in the figure.

(b) Align the camshaft knock pin with the knock pin groove of the pulley, and slide pulley, facing the timing mark upward.

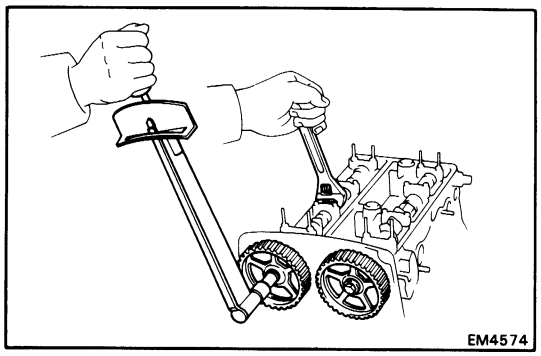

(c) Secure the hexagonal portion of the camshaft, and install the plate washer and bolt. Torque the bolt.

Torque: 475 kg-cm (34 ft-lb, 47 N·m)

CAUTION: Be careful not to damage the cylinder head with the wrench.

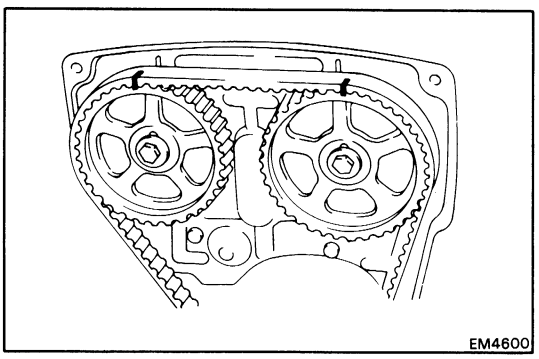

6. INSTALL TIMING BELT

CAUTION: The engine should be cold.

Align the matchmarks of the camshaft timing pulleys and timing belt, and install the timing belt.

NOTE: Be careful not to shift the meshing of the crankshaft timing pulley and timing belt.

7. TEMPORARILY INSTALL CRANKSHAFT PULLEY

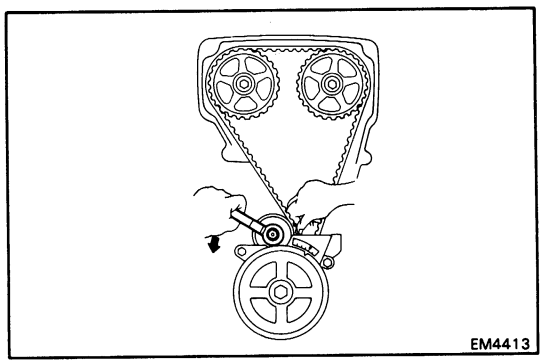

8. CHECK VALVE TIMING AND TIMING BELT DEFLECTION

(a) Slowly loosen the idler pulley bolt.

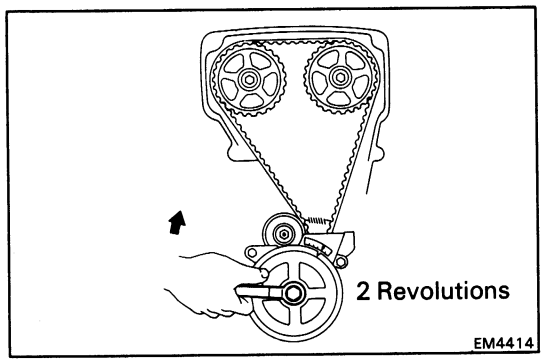

(b) Turn the crankshaft pulley two revolutions from TDC to TDC.

NOTE: Always turn the crankshaft clockwise.

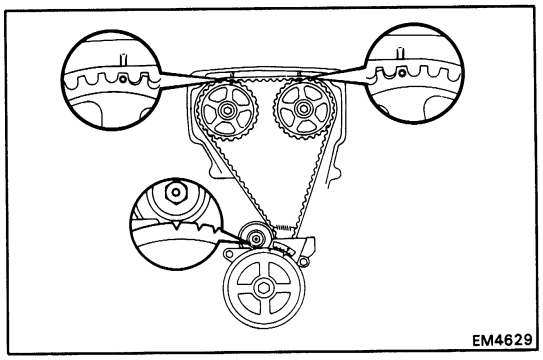

(c) Check that each pulley aligns with the timing marks as shown in the figure.

If the marks do not align, shift meshing of the timing belt and timing pulley and readjust according to steps 6 to 8.

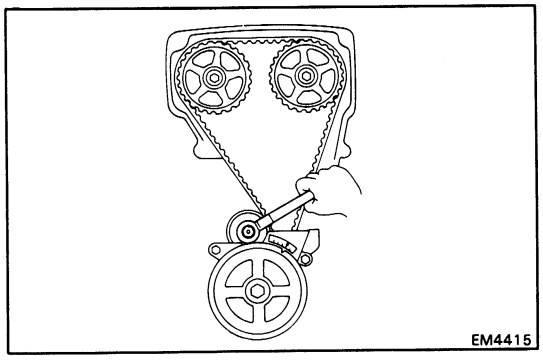

(d) Torque the idler pulley bolt.

Torque: 375 kg-cm (27 ft-lb, 37 N·m)

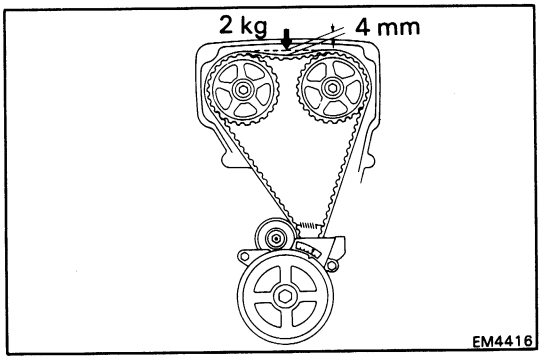

(e) Check belt deflection at the position indicated in the figure.

Deflection: 4 mm (0.16 in.) at 2 kg (4.4 lb, 20 N)

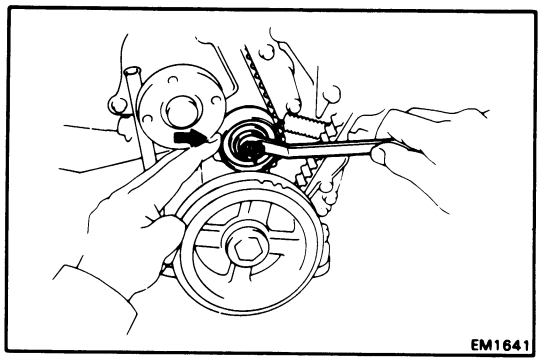

If the deflection is not as specified, adjust with the idler pulley.

9. REMOVE CRANKSHAFT PULLEY
(See step 9 on page EM-16)

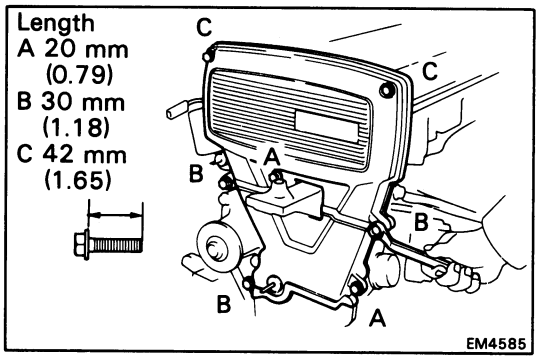

10. INSTALL NO. 2 AND NO. 3 TIMING BELT COVERS

(a) Install the gaskets to the belt covers.

(b) Install the No. 2 and No. 3 belt covers with the seven bolts.

NOTE: Each bolt length is indicated in the figure.

11. INSTALL CRANKSHAFT PULLEY
(See step 17 on page EM-25)

12. INSTALL RH ENGINE MOUNTING INSULATOR

13. INSPECT VALVE CLEARANCE (See page EM-7)

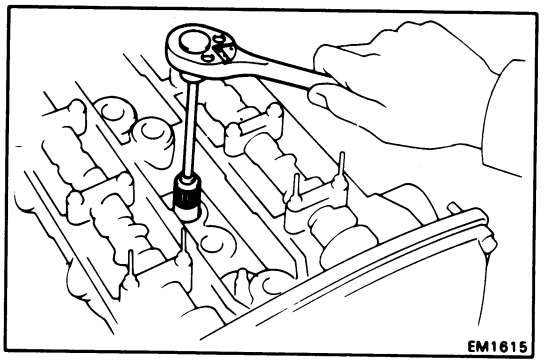

14. INSTALL SPARK PLUGS

Using a plug wrench (16 mm), install the spark plugs.

Torque: 180 kg-cm (13 ft-lb, 18 N·m)

15. INSTALL CYLINDER HEAD COVERS
(See steps 2 to 5 on pages EM-21, 22)

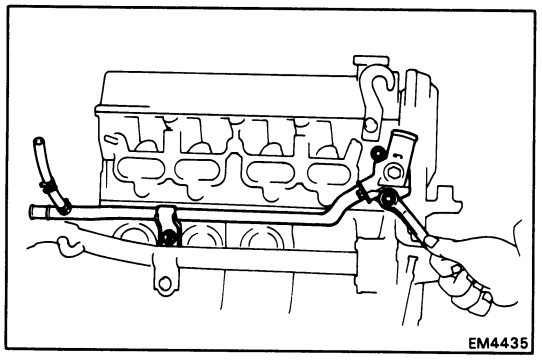

16. INSTALL WATER OUTLET AND BY-PASS PIPE

(a) Install a new gasket, the water outlet and by-pass pipe assembly with the three bolts.

Torque:
Cylinder head side
280 kg-cm (20 ft-lb, 27 N·m)
Cylinder block side
130 kg-cm (9 ft-lb, 13 N·m)

(b) Install the alternator drive adjusting bar with the three bolts.

Torque: 185 kg-cm (13 ft-lb, 18 N·m)

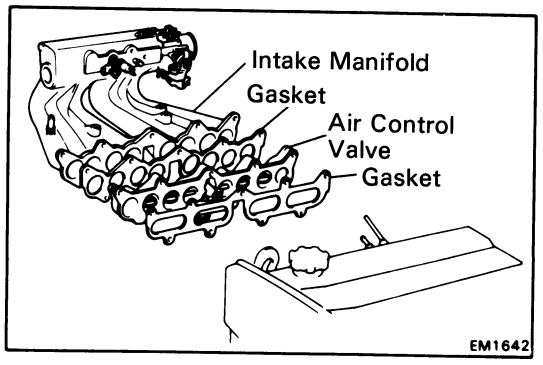

17. INSTALL INTAKE AIR CONTROL VALVE AND INTAKE MANIFOLD

(a) Using new gaskets, install the intake air control valve and intake manifold.

Torque: 280 kg-cm (20 ft-lb, 27 N·m)

(b) Install the VSV with vacuum tank, connect the vacuum hose to the intake air control valve.

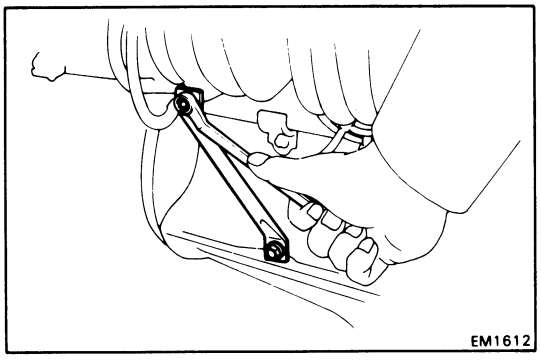

(c) Install the manifold stay.

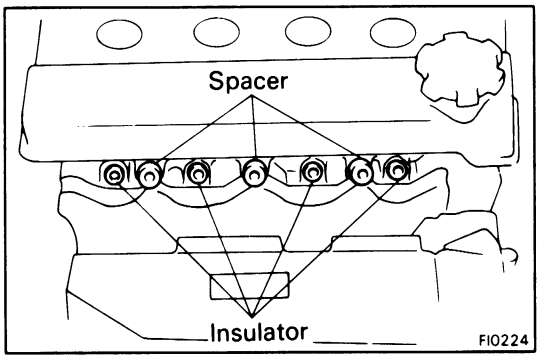

18. INSTALL DELIVERY PIPE WITH INJECTORS

(a) Replace the O-ring on to the injector.

(b) Install the four insulators into the injector holes of the cylinder head.

(c) Install the three spacers on the cylinder head.

(d) Install the injectors on the cylinder head together with the delivery pipe.

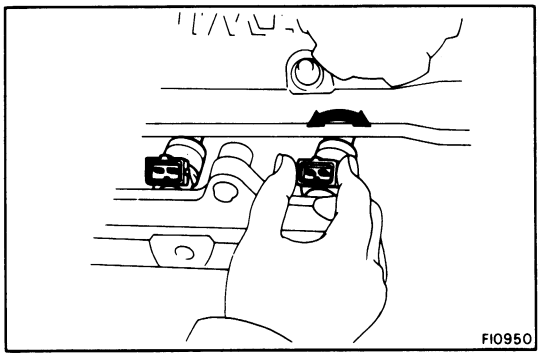

(e) Check that the injectors rotate smoothly.

(f) Install and tighten the three bolts.

Torque: 175 kg-cm (13 ft-lb, 17 N·m)

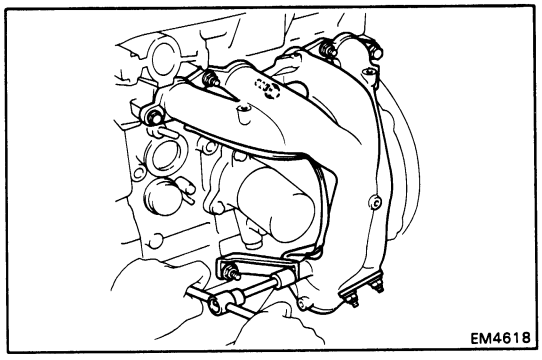

19. INSTALL EXHAUST MANIFOLD

(a) Install the lower heat insulator to the manifold with the three bolts.

(b) Install a new gasket, the exhaust manifold with the three bolts and two nuts.

Torque: 250 kg-cm (18 ft-lb, 25 N·m)

(c) Install the manifold stay with the bolt and nut.

Torque: 400 kg-cm (29 ft-lb, 39 N·m)

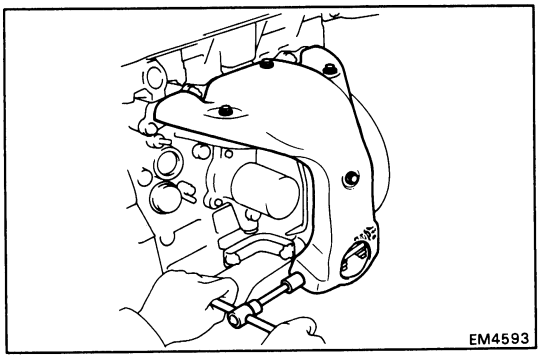

(d) Install the upper heat insulator with the six bolts.

20. INSTALL FRONT EXHAUST PIPE
(See page LU-12)

21. INSTALL WATER PUMP PULLEY AND DRIVE BELT
(See page EM-25)

22. (w/ A/C)
INSTALL A/C IDLER PULLEY AND DRIVE BELT

23. INSTALL DISTRIBUTOR
(See page IG-10)

24. CONNECT FOLLOWING CONNECTORS AND WIRERS:

- Alternator wire and connector
- VSV connector (for T-VIS)
- Starter wire and connector
- Oil pressure sender gauge connector
- (w/ A/C)
  Compressor connector
- Water temp. sender gauge connector
- EGR gas temperature sensor connector (Calif. only)
- Engine compartment cooling fan motor connector
- Noise filter connector
- Ground strap (between cylinder head and body)
- Two igniter connectors
- Bond cable to intake manifold
- Injector connectors
- (w/ A/C)
  VSV connector (for pressure regulator)
- Throttle position sensor connector
- Engine compartment cooling fan temp. sensor connector
- Cold start injector time switch connector
- Engine wire connector to engine main wire

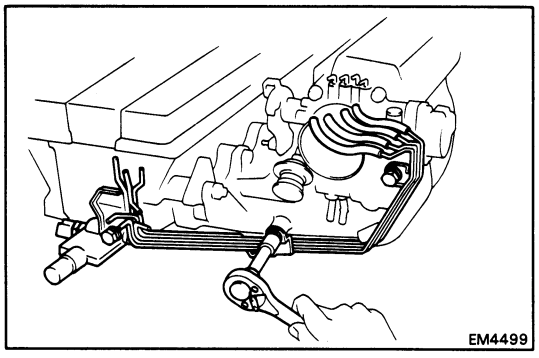
EM4499

25. INSTALL CYLINDER HEAD REAR COVER AND VACUUM PIPE

(a) Using a new gasket, temporarily install the cylinder head rear cover and wire clamp.

(b) Install the vacuum pipe, and tighten the four bolts.

(c) Connect the vacuum hoses to the vacuum pipe.

(d) (w/ A/C)
Connect the water temp. switch connector.

(e) Connect the water temp. sensor connector.

26. CONNECT NO. 2 AND NO. 3 WATER BY-PASS HOSES TO AUXILIARY AIR VALVE

27. CONNECT HIGH-TENSION CORDS TO IGNITION COIL

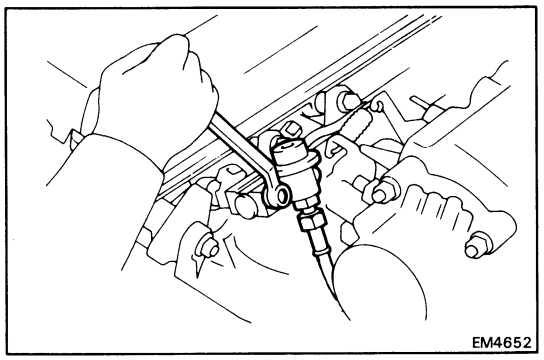

28. INSTALL PRESSURE REGULATOR

(a) Using a new O-ring, install the pressure regulator with the two bolts.

Torque: 95 kg-cm (82 in-lb, 9.3 N·m)

(b) Install the No. 2 fuel pipe to the cylinder head rear cover with the bolt.

(c) Connect the fuel hose to the No. 2 fuel pipe.

(d) Connect the vacuum hose.

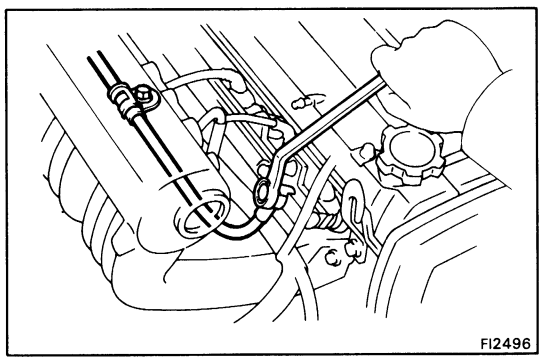

29. INSTALL NO. 1 FUEL PIPE

(a) Connect the fuel pipe with two new gaskets and union bolt.

Torque: 300 kg-cm (22 ft-lb, 29 N·m)

(b) Install the fuel pipe to the intake manifold and cylinder head rear cover.

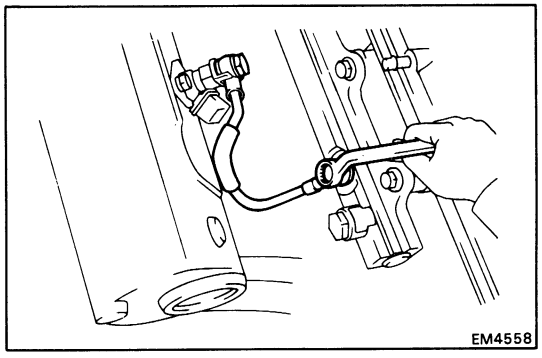

30. INSTALL COLD START INJECTOR PIPE

(a) Using new gaskets, install the cold start injector pipe.

Torque: 180 kg-cm (13 ft-lb, 18 N·m)

(b) Connect the cold start injector connector.

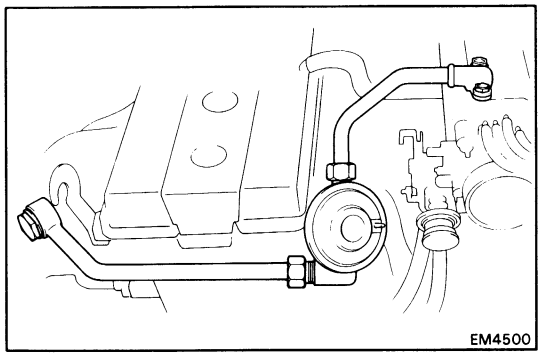

31. INSTALL EGR VALVE WITH PIPES

(a) Using new gaskets, install the EGR valve with pipes.

(b) Install the accelerator cable clamp to the engine hanger.

(c) Install the EGR vacuum modulator and bracket.

32. INSTALL PCV HOSE

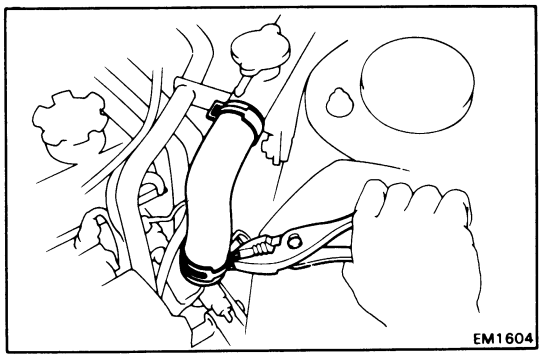

33. CONNECT NO. 1 RADIATOR HOSE TO WATER OUTLET HOUSING

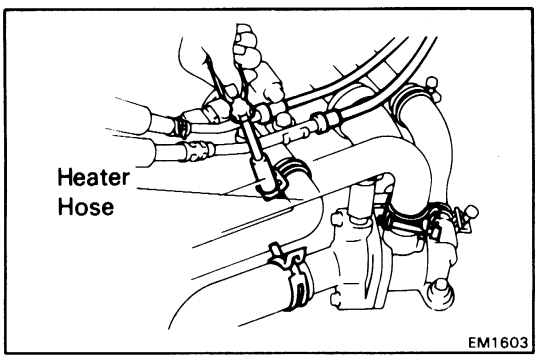

34. CONNECT HEATER HOSE TO CYLINDER HEAD REAR COVER

35. CONNECT FOLLOWING VACUUM HOSES:

- Brake booster hose.
- (w/ Cruise control)
  Cruise control vacuum hose to intake manifold.

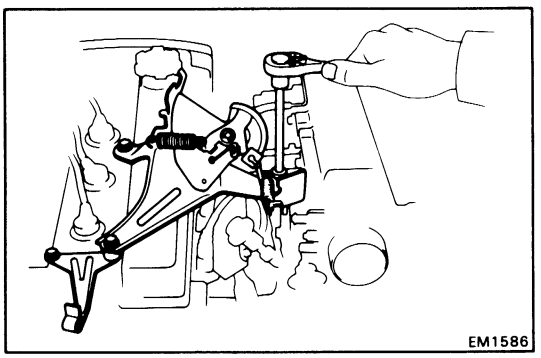

36. INSTALL ACCELERATOR LINK AND SPEEDOMETER CABLE CLAMP

(a) Install the accelerator link and speedometer cable clamp with the four bolts.

(b) Connect the accelerator cable and connecting rod.

(c) (w/ Cruise control)
Connect the cruise control cable.

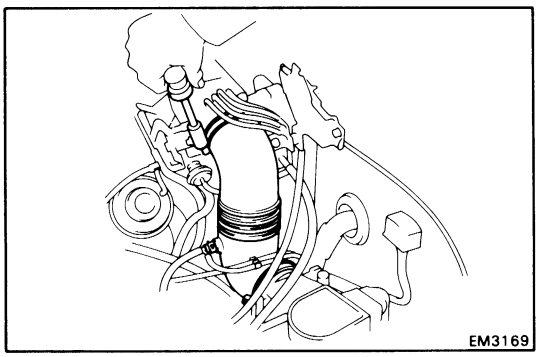

37. INSTALL NO. 1 AIR CLEANER HOSE

(a) Install the air cleaner hoses with clamp. And tighten the clamp bolts.

(b) Connect the VSV and air flow meter connector.

(c) Connect the vacuum hose to the air cleaner hose.

38. INSTALL AIR RESONATOR

39. REFILL WITH COOLANT (See page CO-4)

Capacity: 12.4 liters (13.1 US qts, 10.9 Imp. qts)

40. CONNECT CABLE TO NEGATIVE TERMINAL OF BATTERY

41. START ENGINE AND CHECK FOR LEAKS

42. PERFORM ENGINE ADJUSTMENT

Adjust the ignition timing.
(See steps 5 to 8 on pages IG-11, 12)

43. INSTALL ENGINE UNDER COVER

44. RERFORM ROAD TEST

Check for abnormal noise, shock, slippage, correct shift points and smooth operation.

45. RECHECK ENGINE COOLANT AND ENGINE OIL LEVELS

CYLINDER HEAD (4A-GZE)

COMPONENTS

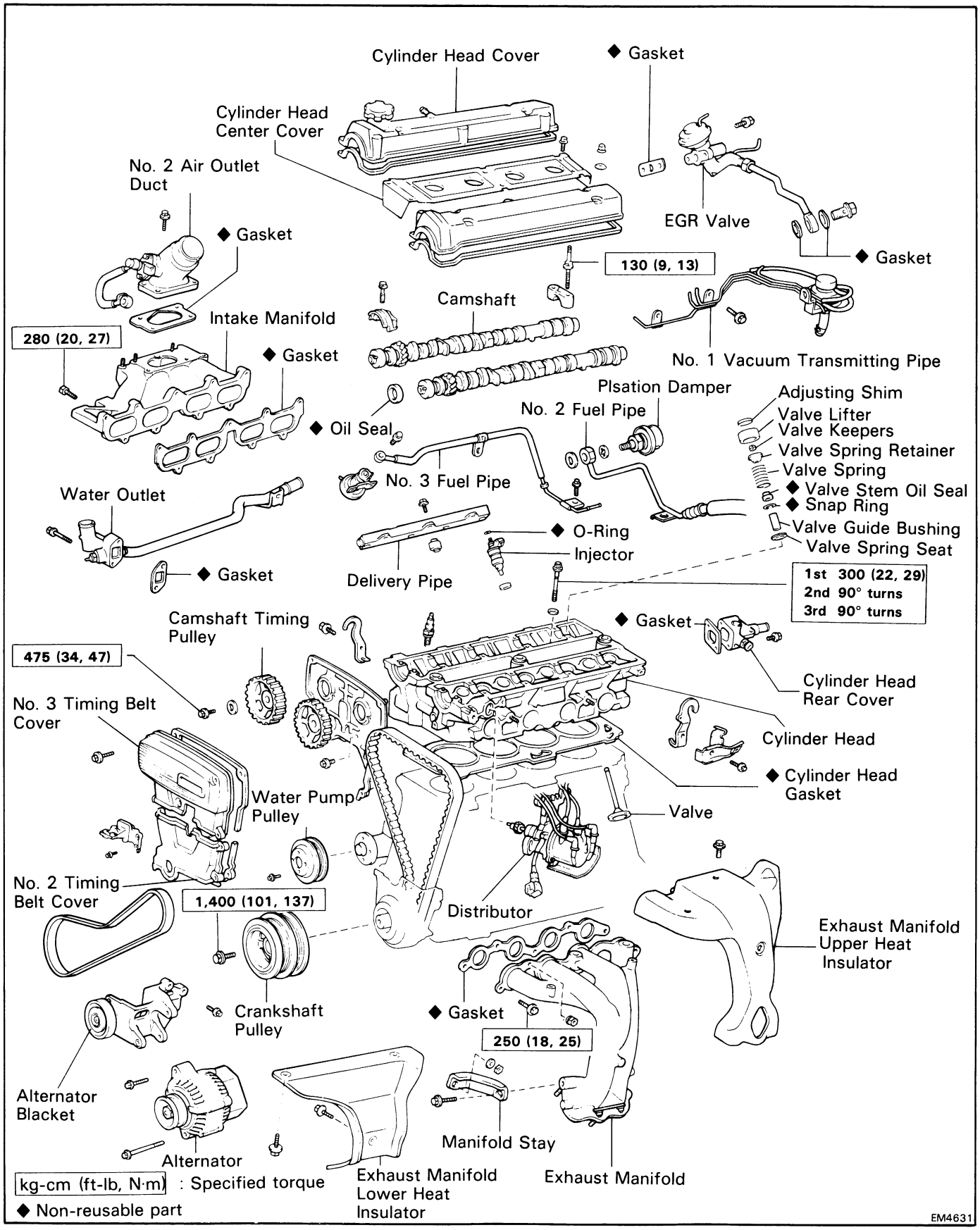

REMOVAL OF CYLINDER HEAD

(See page EM-55)

1. DISCONNECT CABLE FROM NEGATIVE TERMINAL OF BATTERY

2. REMOVE ENGINE HOOD

3. REMOVE ENGINE UNDER COVER

4. DRAIN ENGINE COOLANT (See page CO-3)

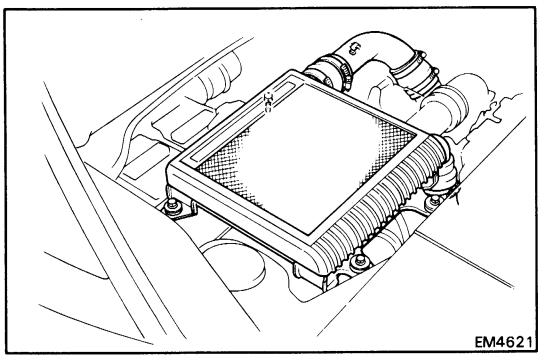
EM4621

5. REMOVE INTERCOOLER

Disconnect the two hose clamps, and remove the four bolts and intercooler.

6. REMOVE BATTERY

7. DISCONNECT AIR BLEEDER HOSE FROM WATER INLET HOUSING

8. (w/ Cruise control)
DISCONNECT CRUISE CONTROL VACUUM HOSE

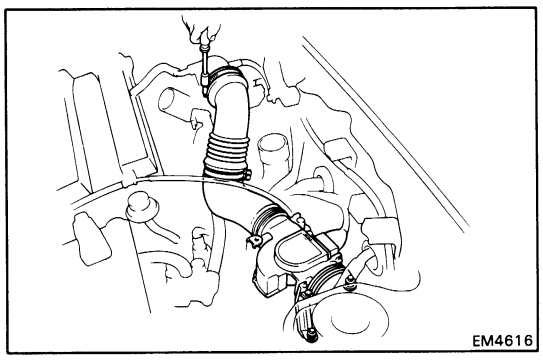
EM4616

9. (A/T vehicle)
DISCONNECT A/T THROTTLE CABLE

10. REMOVE AIR FLOW METER WITH NO. 3 AIR CLEANER HOSE

(a) Disconnect the EGR VSV connector.

(b) Disconnect the air flow meter connector.

(c) Remove the bolt and EGR VSV.

(d) Loosen the two clamps, and remove the three bolts and air flow meter with No. 3 air cleaner hose.

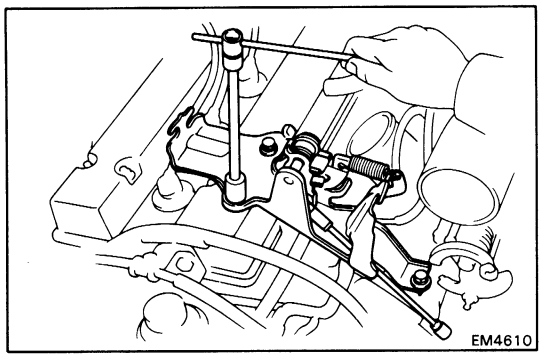
EM4610

11. DISCONNECT ACCELERATOR CABLE

12. (w/ Cruise control)
DISCONNECT CRUISE CONTROL CABLE

13. (w/ Cruise control)
REMOVE ACCELERATOR LINK

Disconnect accelerator rod, and remove the three bolts and accelerator link.

14. (w/ A/C)
DISCONNECT A/C IDLE UP VACUUM HOSES

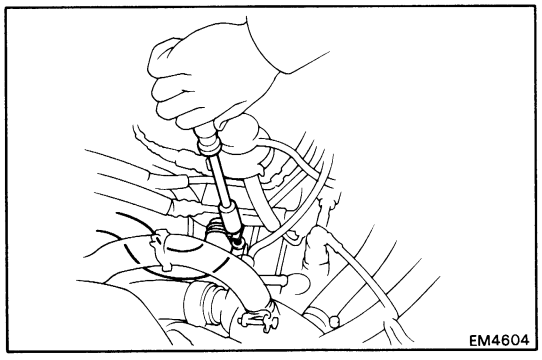
EM4604

15. DISCONNECT HEATER HOSE FROM CYLINDER HEAD REAR COVER

16. DISCONNECT BRAKE BOOSTER VACUUM HOSE

17. REMOVE RADIATOR RESERVOIR TANK

18. DISCONNECT NO. 1 RADIATOR HOSE FROM WATER OUTLET HOUSING

19. DISCONNECT FOLLOWING CONNECTORS AND WIRES:

(a) Cold start injector time switch connector
(b) EGR gas temp. sensor connector
(c) Engine compartment cooling fan sensor connector
(d) Water temperature sensor connector
(e) Water temperature sender gauge connector
(f) Noise filter connector
(g) Ground strap connector (between cylinder head and body)
(h) Igniter connector
(i) Distributor connector
(j) High-tension cord from ignition coil
(k) Solenoid resistor connector
(l) Engine compartment cooling fan motor connector
(m) (w/ A/C)
Two A/C compressor connectors
(n) Oil pressure sender gauge connector
(o) Alternator wire and connector
(p) Injector connectors
(q) Cold start injector connector
(r) Supercharger air control vale connector
(s) Supercharger ABV connector
(t) Throttle position sensor connector
(u) ISC valve connector

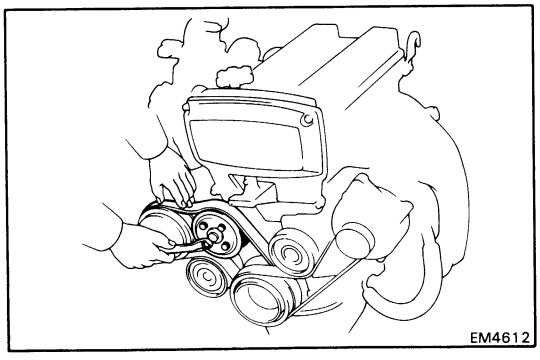

20. REMOVE DRIVE BELTS AND WATER PUMP PULLEY

(a) Loosen the four bolts mounting the pulley to the pulley seat of the water pump.
(b) Loosen the idler pulley lock nuts and adjusting bolts, and remove the drive belts.
(c) Remove the four bolts and water pump pulley.

21. REMOVE SUPERCHARGER (See page SC-5)

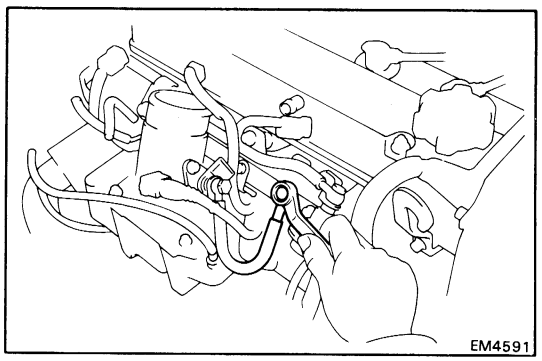

22. REMOVE NO. 2 AIR OUTLET DUCT

(a) Remove the union bolt and gaskets, and disconnect the cold start injector pipe from the delivery pipe.

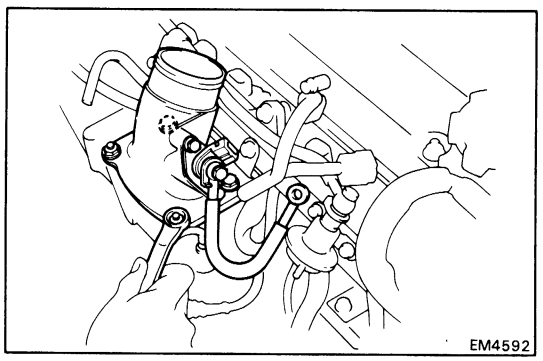

(b) Remove the two bolts, nuts, No. 2 air outlet duct and gasket.

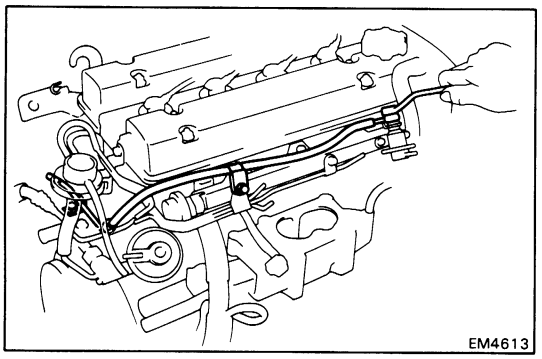

23. DISCONNECT NO. 3 FUEL PIPE

(a) Remove the union bolt and two gaskets.

(b) Remove the two bolts and disconnect the No. 3 fuel pipe.

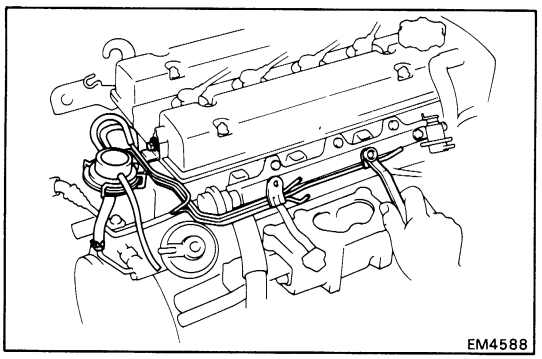

24. REMOVE NO. 1 VACUUM TRANSMITTING PIPE

(a) Disconnect the vacuum hose from the EGR valve.

(b) Disconnect the EGR modulator hose.

(c) Remove the two bolts and No. 1 vacuum transmitting pipe with modulator.

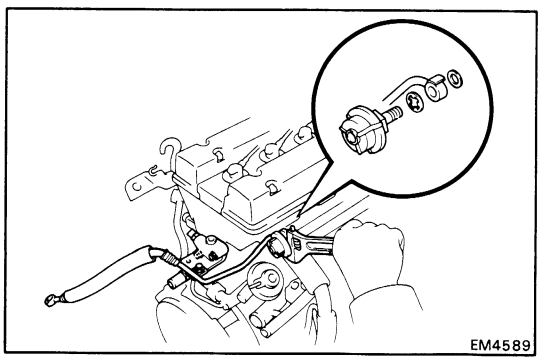

25. DISCONNECT NO. 2 FUEL HOSE

(a) Remove the pulsation damper and gaskets.

(b) Remove the bolt and disconnect the No. 2 fuel hose.

26. REMOVE CYLINDER HEAD REAR COVER

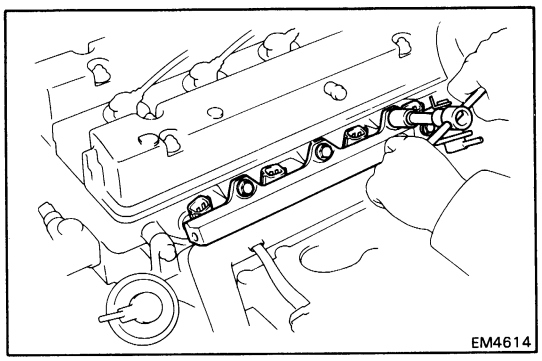

27. REMOVE DELIVERY PIPE WITH INJECTORS

(a) Remove the three bolts, and then remove the delivery pipe with the injectors.

CAUTION: Be careful not to drop the injectors.

(b) Remove the four insulators and three spacers from the cylinder head.

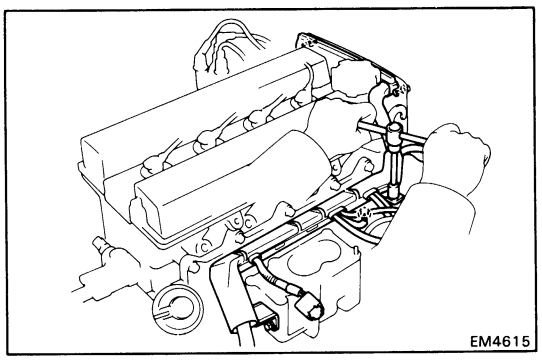

28. LAY WIRE HARNESS TO ONE SIDE

Loosen the two bolts of the No. 3 timing cover, and remove the three bolts and lay the wire harness.

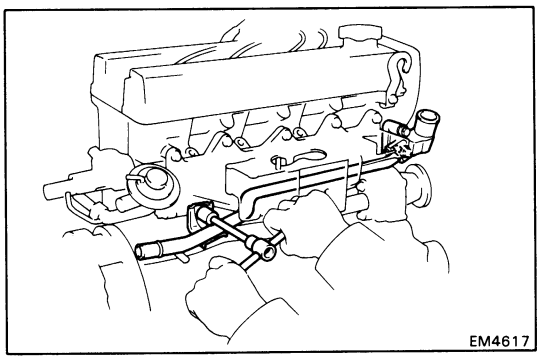

29. REMOVE WATER OUTLET WITH BY-PASS PIPE

(a) Disconnect water by-pass hose.

(b) Remove the three bolts, water outlet with by-pass pipe and gasket.

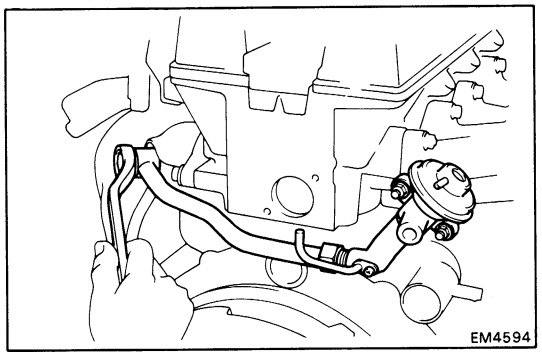

30. REMOVE EGR VALVE WITH PIPE

Remove the union bolt, two gaskets, two nuts and EGR valve with pipe and gasket.

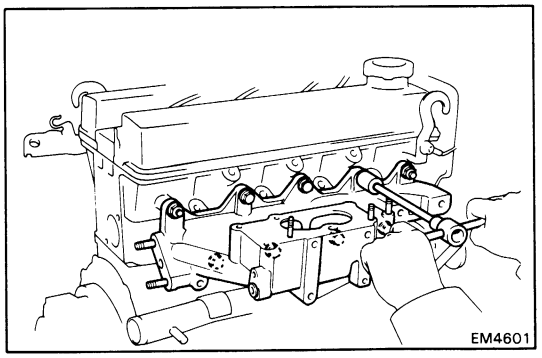

31. REMOVE INTAKE MANIFOLD

Remove the seven bolts, two nuts, intake manifold and gasket.

32. REMOVE FRONT EXHAUST PIPE
(See page LU-5)

33. (w/ A/C)
REMOVE A/C COMPRESSOR AND BRACKET

34. REMOVE DISTRIBUTOR
(See page IG-9)

35. REMOVE ALTERNATOR
(See page CH-7)

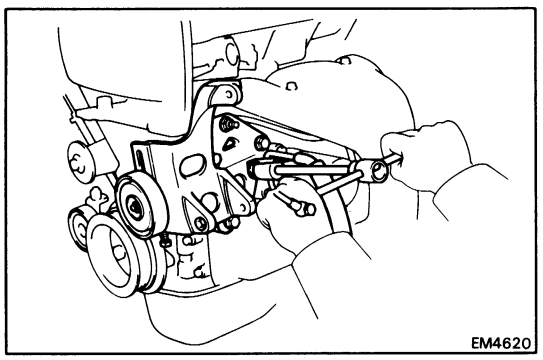

36. REMOVE ALTERNATOR BRACKET

(a) Disconnect the oil cooler pipe.

(b) Remove the three bolts, nut and alternator bracket.

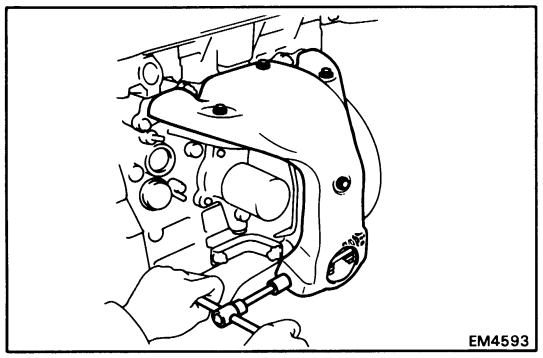

37. REMOVE EXHAUST MANIFOLD

(a) Remove the six bolts and upper heat insulator.

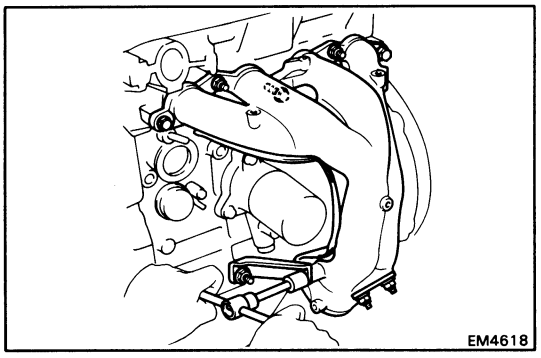

(b) Remove the bolt, nut and manifold stay.

(c) Remove the three bolts, two nuts exhaust manifold and gasket.

38. REMOVE CAMSHAFT AND CYLINDER HEAD
(See steps 29 to 43 on pages EM-30 to 33)

DISASSEMBLY OF CYLINDER HEAD

(See pages EM-34, 55)

INSPECTION, CLEANING AND REPAIR OF CYLINDER HEAD COMPONENTS

(See page EM-35)

ASSEMBLY OF CYLINDER HEAD

(See pages EM-45, 55)

INSTALLATION OF CYLINDER HEAD

(See pages EM-45, 55)

1. INSTALL CYLINDER HEAD AND CAMSHAFT
(See steps 1 to 15 on pages EM-46 to 50)

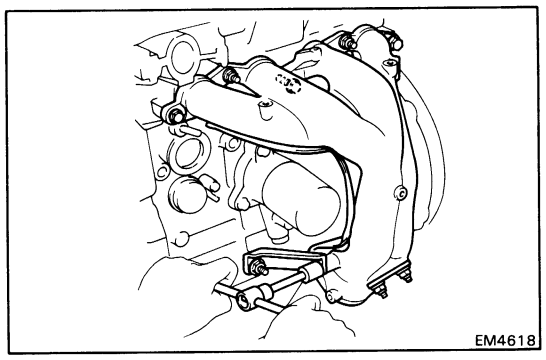

2. INSTALL EXHAUST MANIFOLD

(a) Install a new gasket, the exhaust manifold with the three bolts and two nuts.

Torque: 250 kg-cm (18 ft-lb, 25 N·m)

(b) Install the manifold stay with the bolt and nut.

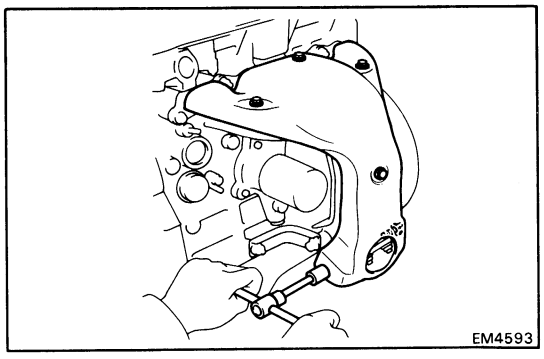

(c) Install the upper heat insulator with the six bolts.

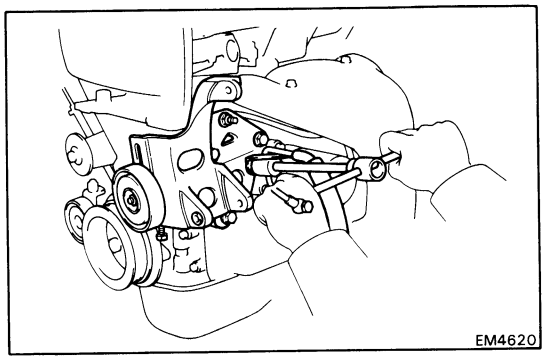

3. INSTALL ALTERNATOR BRACKET

(a) Install the alternator bracket with the three bolts and nut.

(b) Connect the oil cooler pipe.

4. INSTALL ALTERNATOR
(See page CH-15)

5. INSTALL DISTRIBUTOR
(See page IG-10)
(w/ A/C)

6. INSTALL A/C COMPRESSOR AND BRACKET

7. INSTALL FRONT EXHAUST PIPE
(See page LU-12)

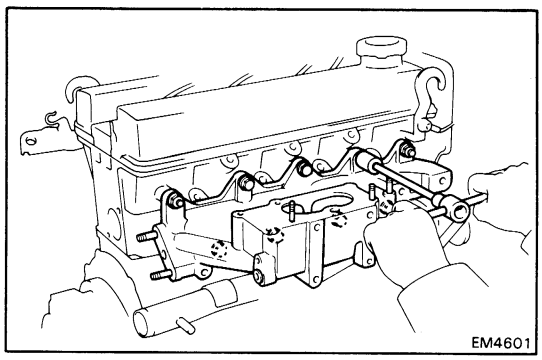
EM4601

8. INSTALL INTAKE MANIFOLD

Install a new gasket, the intake manifold with the seven bolts and two nuts.

Torque: 280 kg-cm (20 ft-lb, 27 N·m)

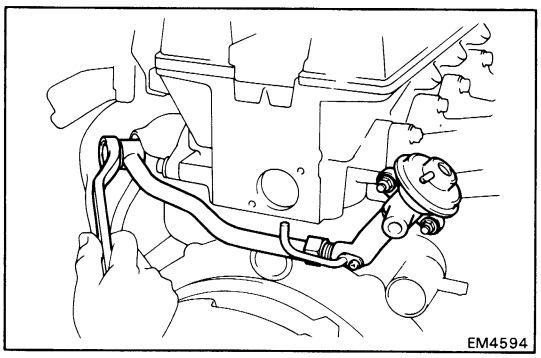
EM4594

9. INSTALL EGR VALVE WITH PIPE

Using new gaskets, install the EGR valve with pipe. Torque the union bolt and two nuts.

Torque:	**Union bolt**	**700 kg-cm (51 ft-lb, 69 N·m)**
	Nut	**190 kg-cm (14 ft-lb, 19 N·m)**

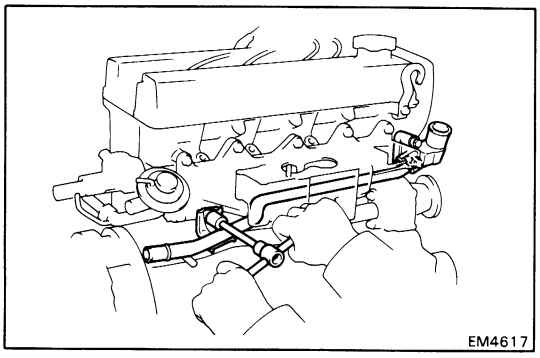
EM4617

10. INSTALL WATER OUTLET WITH BY-PASS PIPE

Using a new gasket, install the water outlet with by-pass pipe to the cylinder head and intake manifold with the three bolts.

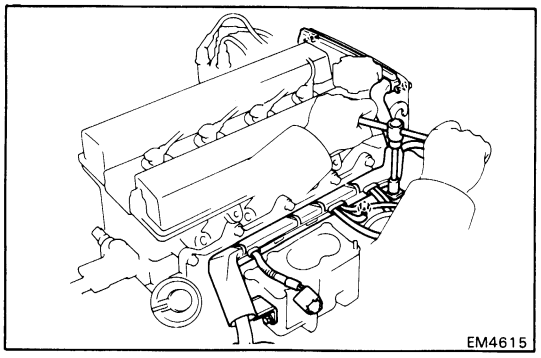
EM4615

11. CLAMP WIRE HARNESS

Clamp the wire harness with the five bolts.

12. INSTALL DELIVERY PIPE WITH INJECTORS
(See page FI-90)

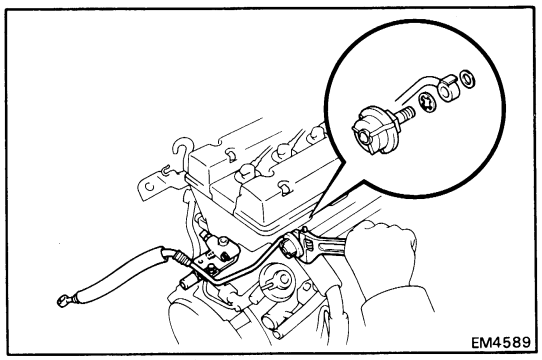

13. INSTALL CYLINDER HEAD REAR COVER

14. CONNECT NO. 2 FUEL HOSE

(a) Install the pulsation damper with new gaskets.

Torque: 300 kg-cm (22 ft-lb, 29 N·m)

(b) Clamp the hose to the cylinder head rear cover with the bolt.

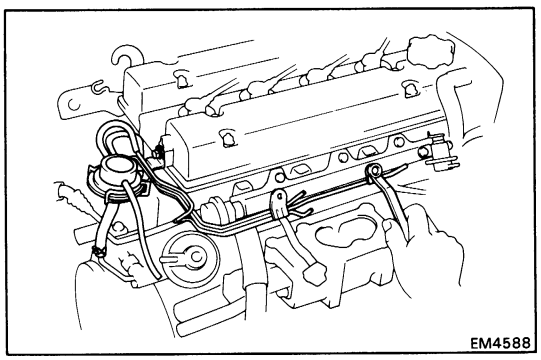

15. INSTALL NO. 1 VACUUM TRANSMITTING PIPE

(a) Install the No. 1 vacuum transmitting pipe with modulator with the two bolts.

(b) Connect the EGR modulator hose.

(c) Connect the vacuum hose.

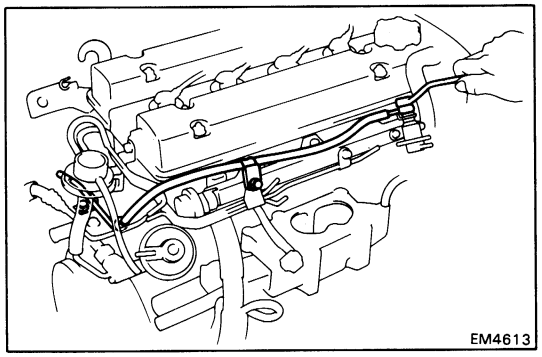

16. CONNECT NO. 3 FUEL PIPE

(a) Connect the No. 3 fuel pipe with the union bolt and new gasket.

Torque: 150 kg-cm (11 ft-lb, 15 N·m)

(b) Clamp the No. 3 fuel pipe with the two bolts.

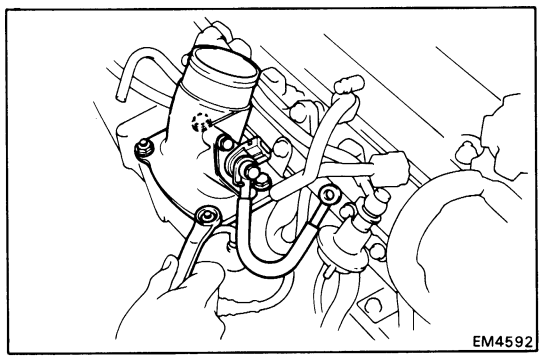

17. INSTALL NO. 2 AIR OUTLET DUCT

(a) Install the No. 2 air outlet duct with a new gasket, the two bolts and two nuts.

Torque: 95 kg-cm (82 in.-lb, 9 N·m)

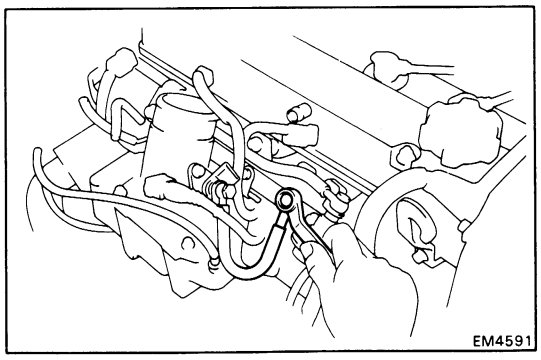

(b) Connect the cold start injector pipe to the delivery pipe with new gaskets and the union bolt.

Torque: 150 kg-cm (11 ft-lb, 15 N·m)

18. INSTALL SUPERCHARGER (See page SC-17)

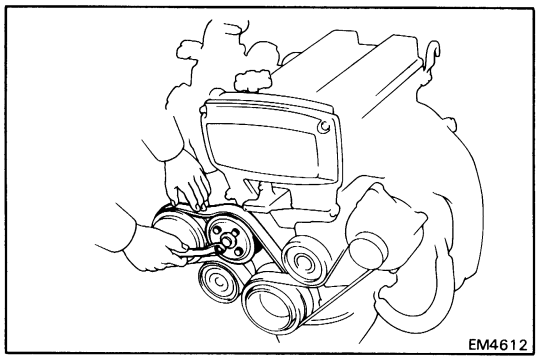

19. INSTALL WATER PUMP PULLEY AND DRIVE BELTS

(a) Install the water pump pulley with the four bolts.

(b) Install and adjust drive belts.
(See page MA-4)

(c) Stretch the belt tight and tighten the four pulley bolts.

20. CONNECT FOLLOWING CONNECTORS AND WIRES:

(a) Cold start injector time switch connector

(b) EGR gas temp. sensor connector (Calif. only)

(c) Engine compartment cooling fan sensor connector

(d) Water temperature sensor connector

(e) Water temperature sender gauge connector

(f) Noise filter connector

(g) Ground strap connector (between cylinder head and body)

(h) Igniter connector

(i) Distributor connector

(j) High-tension cord from ignition coil

(k) Solenoid resistor connector

(l) Engine compartment cooling fan motor connector

(m) (w/ A/C)
Two A/C compressor connectors

(n) Oil pressure sender gauge connector

(o) Alternator wire and connector

(p) Injector connectors

(q) Cold start injector connector

(r) Supercharger air control valve connector

(s) Supercharger ABV connector

(t) Throttle position sensor connector

(u) ISC valve connector

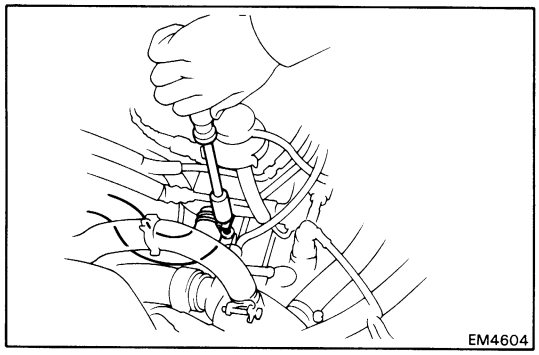

21. CONNECT NO. 1 RADIATOR HOSE TO WATER OUTLET HOUSING

22. INSTALL RADIATOR RESERVOIR TANK

23. CONNECT BRAKE BOOSTER VACUUM HOSE

24. CONNECT HEATER HOSE TO CYLINDER HEAD REAR COVER

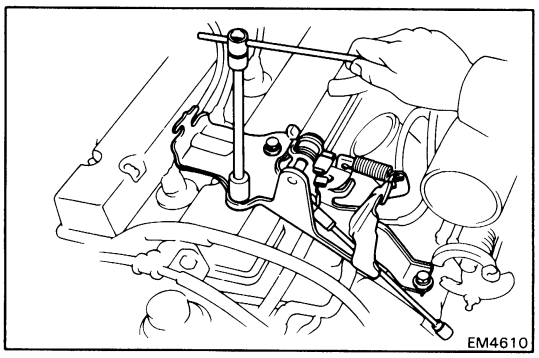

25. (w/ A/C)
CONNECT A/C IDLE UP VACUUM HOSES

26. (w/ Cruise control)
INSTALL ACCELERATOR LINK

(a) Install the accelerator link with the three bolts.

(b) Connect the accelerator rod.

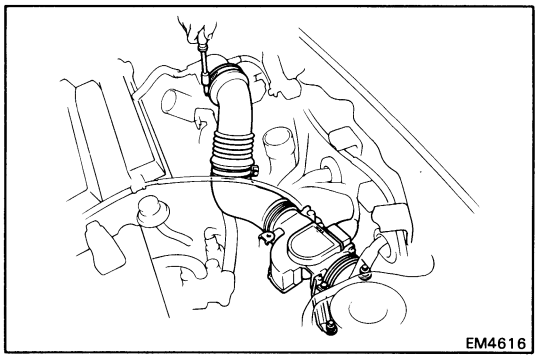

27. INSTALL AIR FLOW METER WITH NO. 3 AIR CLEANER HOSE

(a) Install the air flow meter with No. 3 air cleaner hose with the three bolts and two clamps.

(b) Install the EGR VSV with the bolt.

(c) Connect the air flow meter and EGR VSV connectors.

28. (A/T vehicle)
CONNECT A/T THROTTLE CABLE

29. (w/ Cruise control)
CONNECT CRUISE CONTROL VACUUM HOSE

30. CONNECT AIR BLEEDER HOSE TO WATER INLET HOUSING INSTALL BATTERY

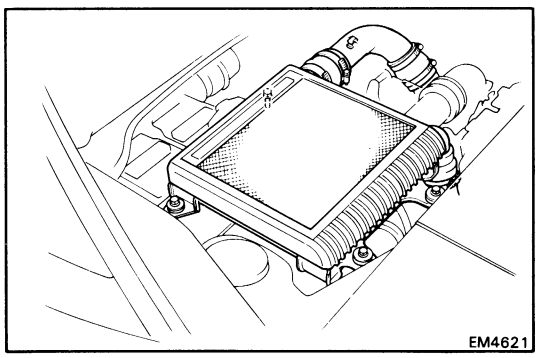

31. INSTALL INTERCOOLER

Install the intercooler with the four bolts and two clamps.

32. REFILL WITH COOLANT (See page CO-4)

Capacity:
12.4 liters (13.1 US qts, 10.9 Imp. qts)

33. CONNECT CABLE TO NEGATIVE TERMINAL OF BATTERY

34. START ENGINE AND CHECK FOR LEAKS

35. PERFORM ENGINE ADJUSTMENT

Adjust the ignition timing.
(See steps 5 to 8 on pages IG-11, 12)

36. INSTALL ENGINE UNDER COVER

37. PERFORM ROAD TEST

Check for abnormal noise, shock, slippage, correct shift points and smooth operation.

38. RECHECK ENGINE COOLANT AND ENGINE OIL LEVELS

CYLINDER BLOCK

COMPONENTS

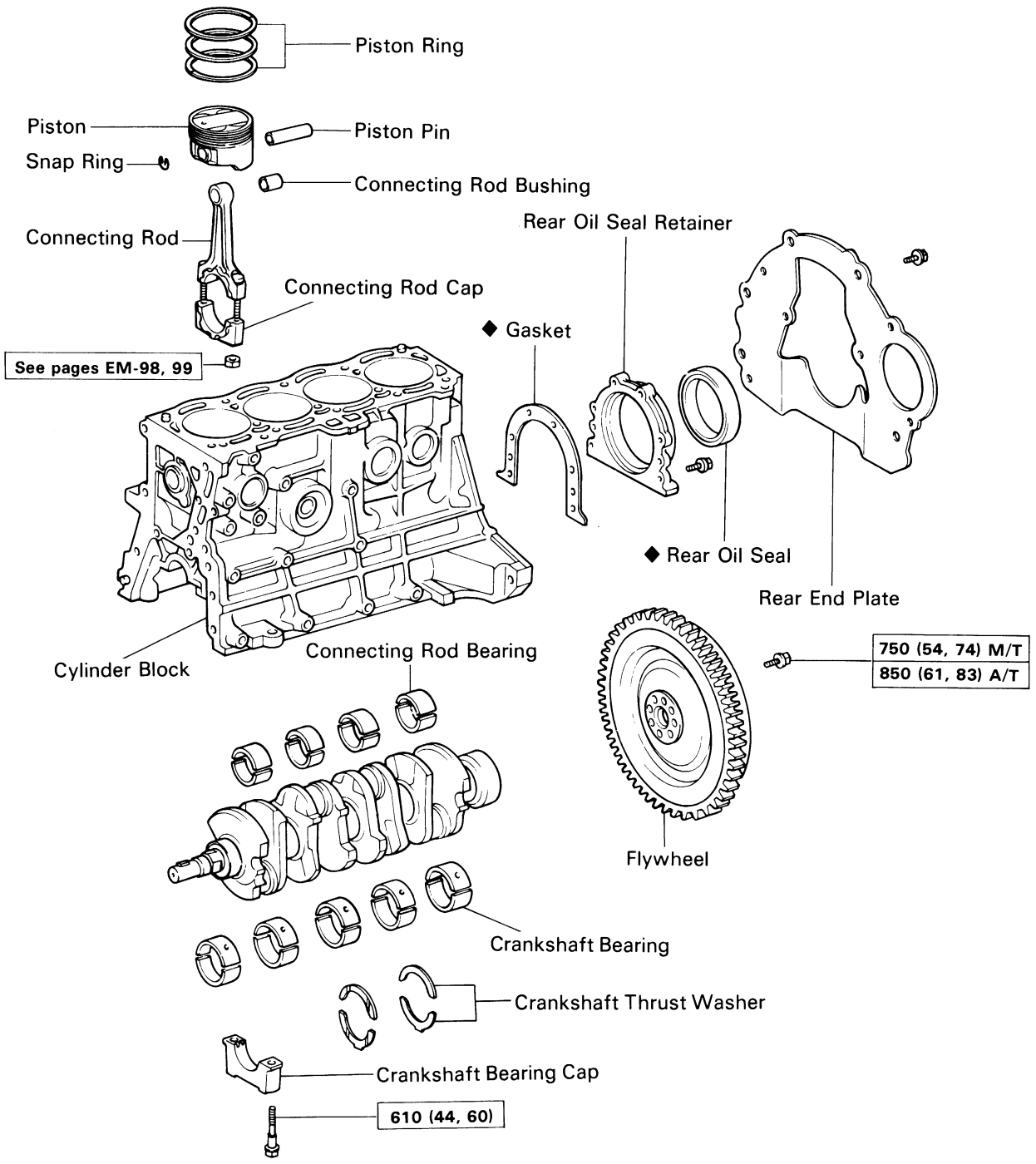

kg-cm (ft-lb, N·m) : Specified torque

◆ Non-reusable part

EM4531

REMOVAL OF ENGINE (4A-GE)

1. **DISCONNECT CABLE FROM NEGATIVE TERMINAL OF BATTERY**

2. **REMOVE FUEL TANK PROTECTORS AND ENGINE UNDER COVER**

3. **DRAIN ENGINE OIL**

4. **DRAIN ENGINE COOLANT (See page CO-3)**

5. **DISCONNECT FOLLOWING CABLES:**
   - Accelerator cable
   - (w/ Cruise control)
     Cruise control cable
   - (A/T vehicle)
     A/T throttle cable

6. **DISCONNECT CRUISE CONTROL VACUUM HOSE**

7. **REMOVE BATTERY**

8. **REMOVE AIR FLOW METER WITH NO. 1 AIR HOSE**

9. **DISCONNECT HEATER HOSES AND NO. 6 RADIATOR HOSE**
   (a) Disconnect the heater hoses from the cylinder head rear cover and water inlet housing.
   (b) Disconnect the No. 6 radiator hose from the water inlet.

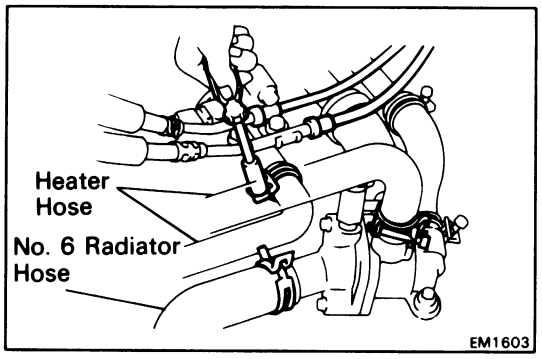

10. **DISCONNECT AIR BLEEDER HOSE FROM WATER INLET HOUSING**

11. **DISCONNECT FUEL HOSE FROM FILTER**

12. **DISCONNECT FUEL RETURN HOSE**

13. **DISCONNECT VACUUM HOSE FROM CHARCOAL CANISTER**

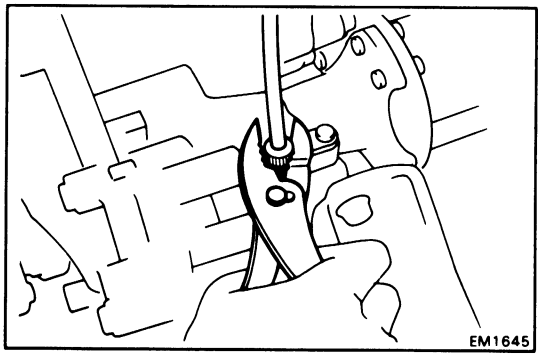

14. **DISCONNECT FOLLOWING CONNECTORS:**
    - Engine wire and engine main wire connector
    - (M/T vehicle)
      Back-up light switch connector

15. **DISCONNECT SPEEDOMETER CABLE**

16. **(M/T vehicle)**
    REMOVE TRANSAXLE PROTECTOR

17. **REMOVE GROUND STRAP FROM WATER INLET HOUSING**

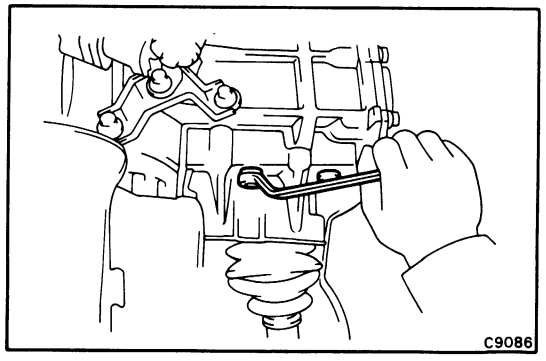

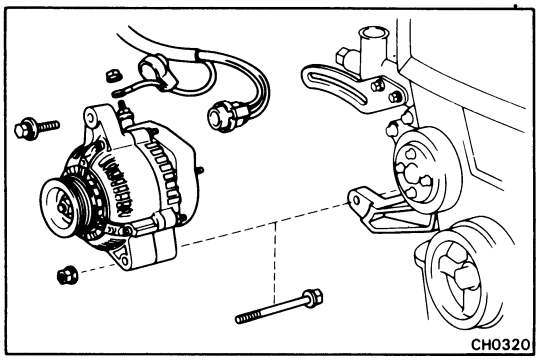

18. REMOVE RADIATOR RESERVOIR TANK

19. REMOVE AIR CONDITIONER DRIVE BELT

Loosen the lock nut and adjusting bolt. Remove the drive belt.

20. REMOVE ALTERNATOR (See page CH-7)

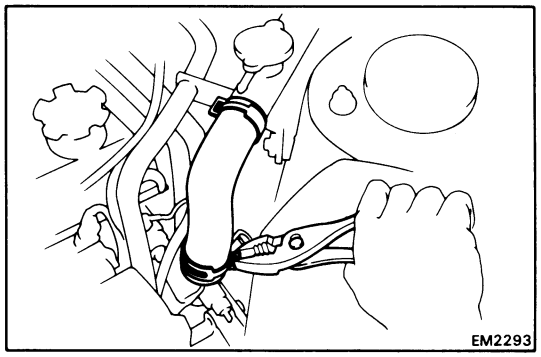

21. DISCONNECT NO. 1 RADIATOR HOSE FROM WATER OUTLET HOUSING

22. DISCONNECT BRAKE BOOSTER HOSE

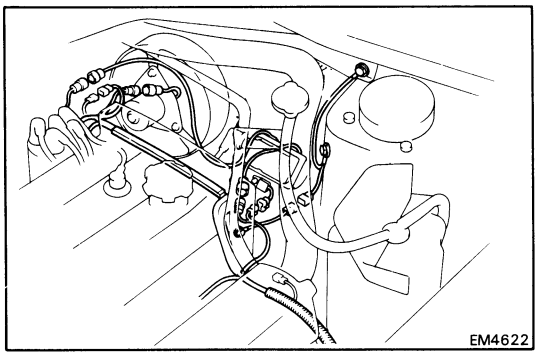

23. DISCONNECT FOLLOWING CONNECTORS:

- Two igniter connectors
- Noise filter connector
- Engine compartment cooling fan motor connector
- Ground strap connector (between cylinder head and body)
- (w/ A/C)
  Compressor connector

24. DISCONNECT HIGH-TENSION CORD FROM IGNITION COIL

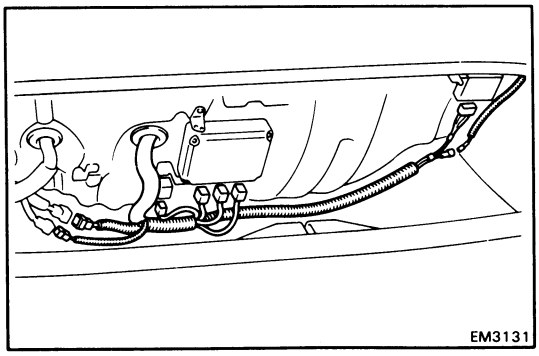

25. PULL OUT ENGINE WIRE HARNESS TO ENGINE COMPARTMENT

(a) Remove the rear luggage compartment trim with the five clips.

(b) Disconnect following connectors:
- Circuit opening relay connector
- ECU connectors
- Cooling fan computor connector
- Engine wire and engine main wire connectors

(c) Pull out wire harness to the engine compartment.

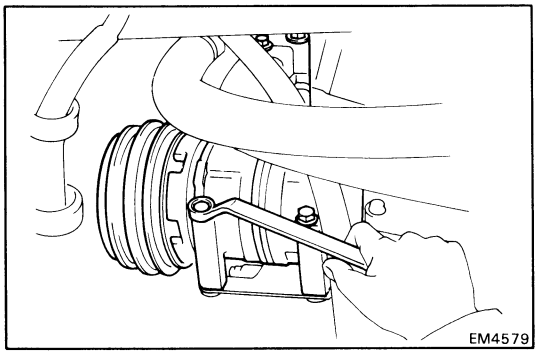

26. (w/ A/C)
DISCONNECT A/C COMPRESSOR

(a) Remove the four compressor mounting bolts.

(b) Move the compressor aside and suspend it.

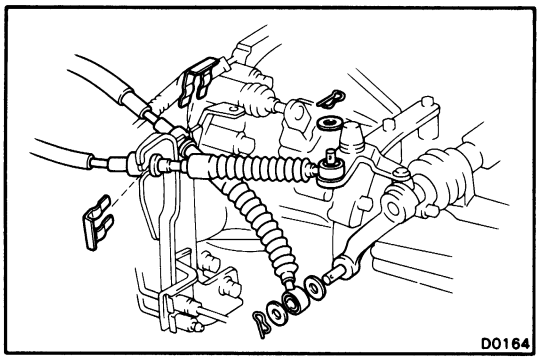

27. DISCONNECT CONTROL CABLES
(M/T vehicle)

(a) Remove the clips, washers and retainers.

(b) Disconnect the control cables from the shift outer lever and select lever.

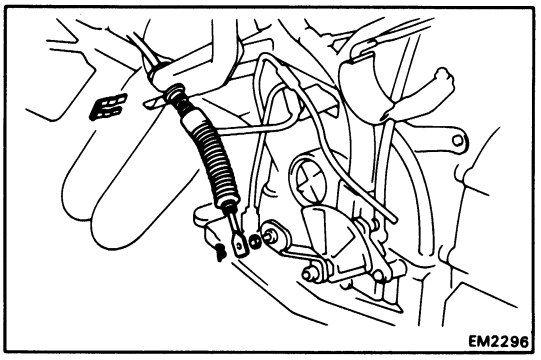

(A/T vehicle)

(a) Remove the clip and retainer.

(b) Disconnect the control cable from the shift lever.

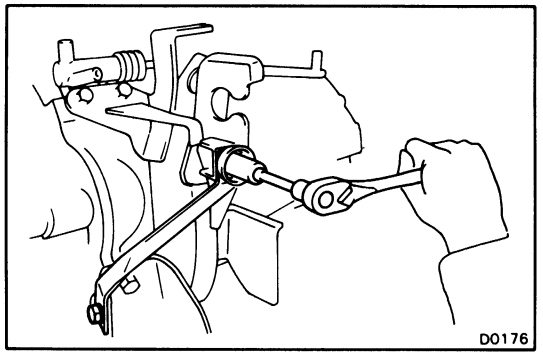

28. (M/T vehicle)
REMOVE CLUTCH RELEASE CYLINDER AND CONTROL BRACKET

(a) Remove the two bolts and No. 2 control cable bracket.

(b) Remove the three bolts and control bracket and clutch release cylinder.

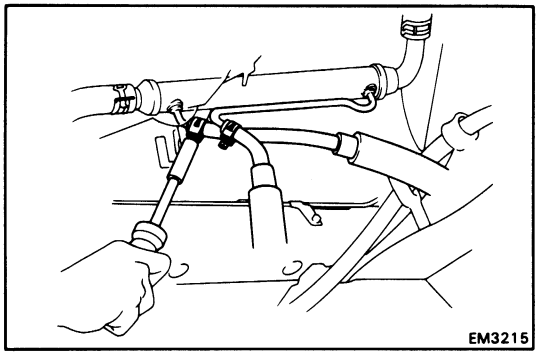

29. (w/ Oil cooler)
DISCONNECT ENGINE OIL COOLER HOSES

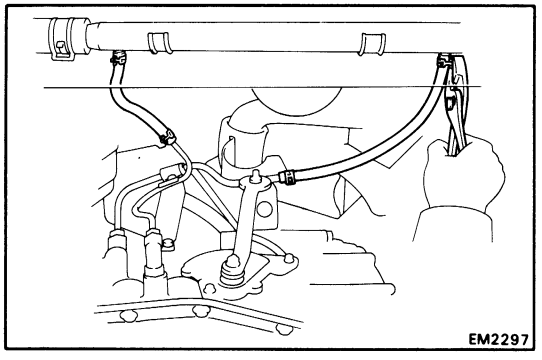

30. (w/ A/T)
DISCONNECT A/T OIL COOLER HOSES

31. REMOVE FRONT EXHAUST PIPE
(See page LU-5)

32. REMOVE REAR DRIVE SHAFTS
(See page RA-16)

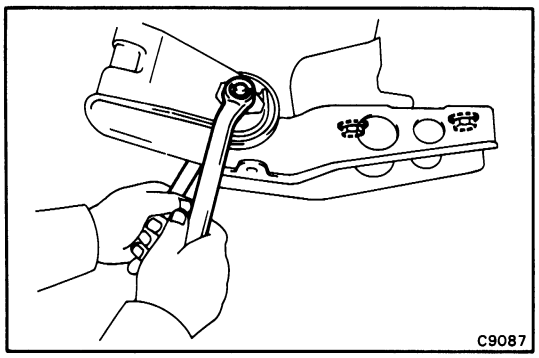

33. REMOVE FRONT MOUNTING INSULATOR

(a) Remove the mounting through bolt.

(b) Remove the two mount bolts.

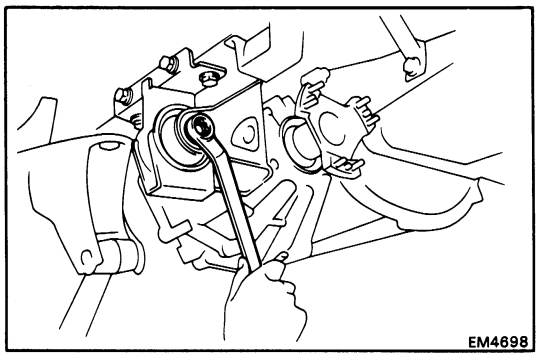

34. REMOVE REAR MOUNTING INSULATOR

(a) Remove the mounting through bolt.

(b) Remove the four mount bolts.

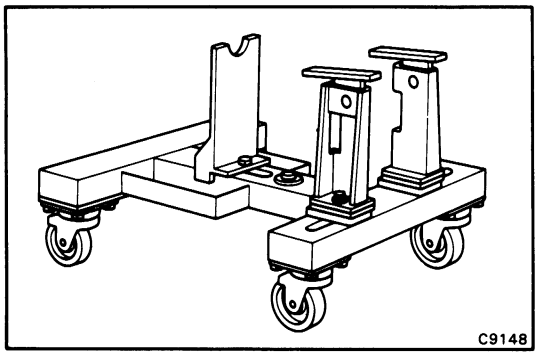

35. REMOVE ENGINE WITH TRANSAXLE

NOTE: Prepare an engine saddle in advance as shown.

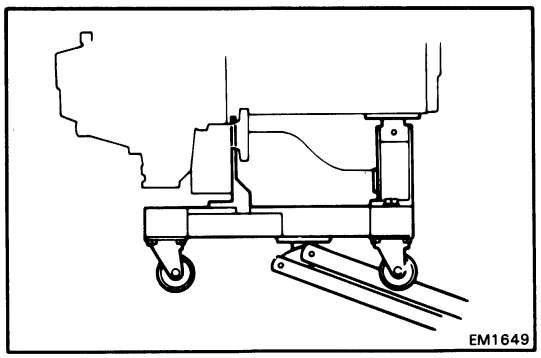

(a) Lower the vehicle while supporting the engine with the engine saddle.

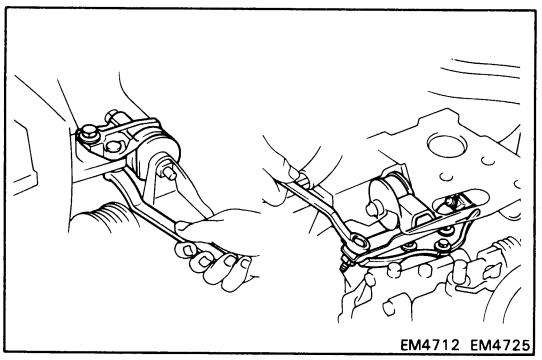
EM4712 EM4725

(b) Remove the two bolts and nuts holding the RH mounting bracket and RH mounting insulator.

(c) Remove the two (M/T) or three (A/T) bolts holding the LH mounting insulator and transaxle bracket.

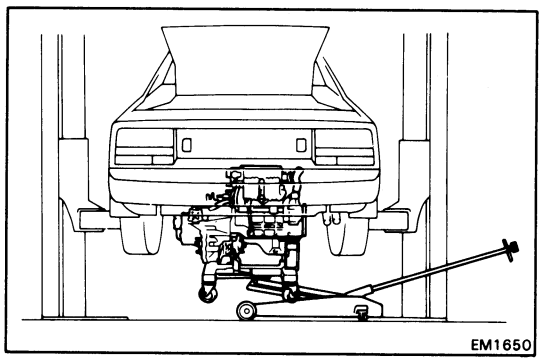
EM1650

(d) Slowly raise the vehicle.

CAUTION: Be careful not to damage the throttle position sensor.

(e) Make sure the engine is clear of all wiring, hoses and cables.

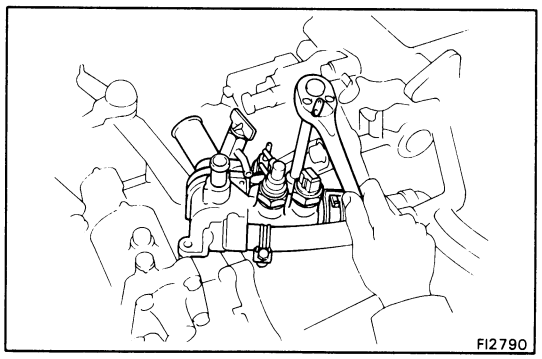
FI2790

36. REMOVE WATER INLET WITH HOUSING

(a) Disconnect the start injector time switch connector.

(b) Disconnect the vacuum hoses from BVSVs.

(c) Remove the water inlet housing mounting nut.

(d) Disconnect the two hoses from the No. 1 and No. 2 water by-pass pipes, and remove the water inlet housing.

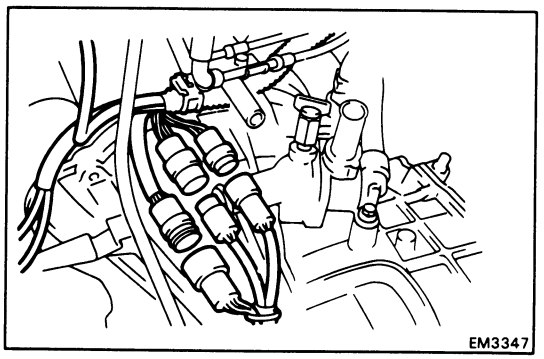
EM3347

37. DISCONNECT FOLLOWING CONNECTORS:

- Back-up and neutral start switch connector
- Neutral start switch connector
- Transmission solenoid connector

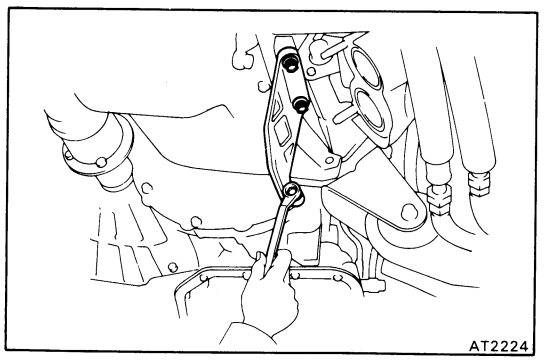
AT2224

38. REMOVE FLYWHEEL HOUSING UNDER COVER

(a) (A/T vehicle)
Remove the three bolts and stiffener plate.

(b) Remove the three bolts (M/T) or two bolts (A/T) and under cover.

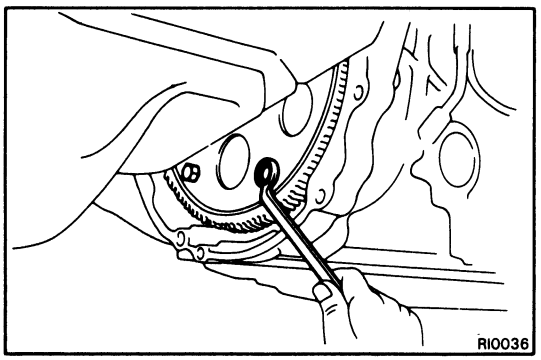

39. (A/T vehicle)
REMOVE SIX TORQUE CONVERTER MOUNTING BOLTS

Turn the crankshaft to gain access to each bolt. Remove the six bolts.

40. REMOVE STARTER (See page ST-3)

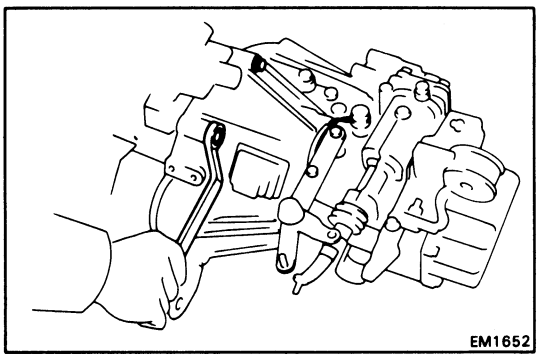

41. REMOVE TRANSAXLE FROM ENGINE

REMOVAL OF ENGINE (4A-GZE)

1. **DISCONNECT CABLE FROM NEGATIVE TERMINAL OF BATTERY**

2. **REMOVE FUEL TANK PROTECTORS AND ENGINE UNDER COVER**

3. **DRAIN ENGINE OIL**

4. **DRAIN ENGINE COOLANT (See page CO-3)**

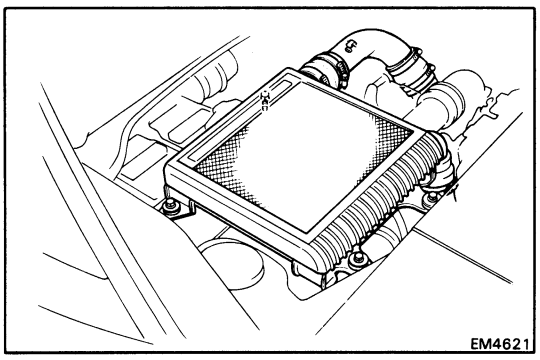

5. **REMOVE INTERCOOLER**

   Disconnect the two hose clamps, and remove the four bolts and intercooler.

6. **REMOVE BATTERY**

7. **DISCONNECT FOLLOWING HOSES:**
   (a) (w/ A/C)
   A/C idle up vacuum hoses
   (b) Charcoal canister vacuum hose
   (c) (w/ Cruise control)
   Cruise control vacuum hose
   (d) Air bleeder hose from water inlet housing

8. **(A/T vehicle)**
   DISCONNECT A/T THROTTLE CABLE

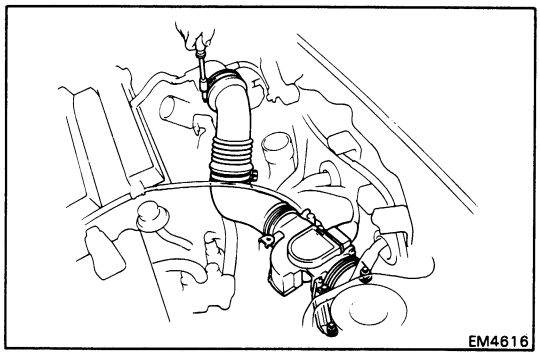

9. **REMOVE AIR FLOW METER WITH NO. 3 AIR CLEANER HOSE**
   (a) Disconnect the EGR VSV connector.
   (b) Disconnect the air flow meter connector.
   (c) Remove the bolt and EGR VSV.
   (d) Loosen the two clamps, and remove the three bolts and air flow meter with No. 3 air cleaner hose.

10. **DISCONNECT ACCELERATOR CABLE**

11. **(w/ Cruise control)**
    DISCONNECT CRUISE CONTROL CABLE

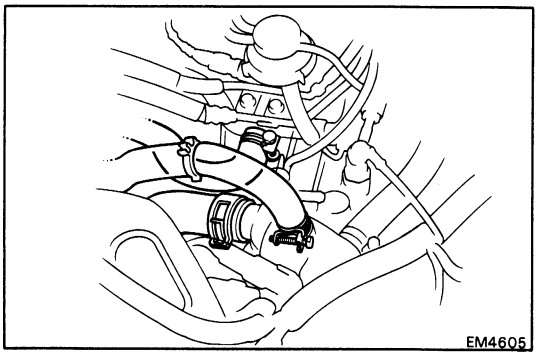

12. **DISCONNECT HEATER HOSES AND NO. 6 RADIATOR HOSE**

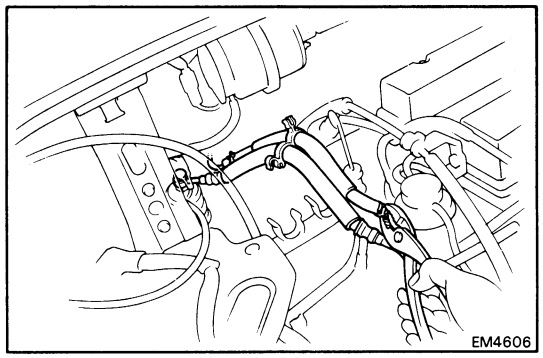

13. DISCONNECT FUEL INLET AND RETURN HOSES

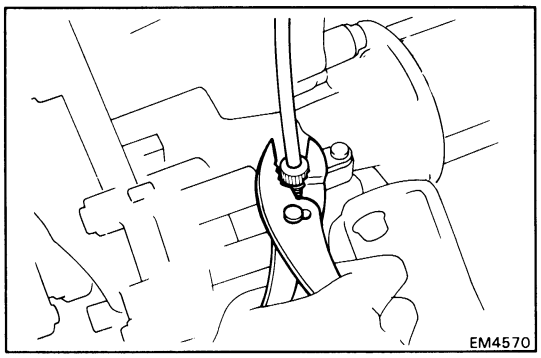

14. DISCONNECT SPEEDOMETER CABLE

15. DISCONNECT BRAKE BOOSTER VACUUM HOSE

16. REMOVE RADIATOR RESERVOIR TANK

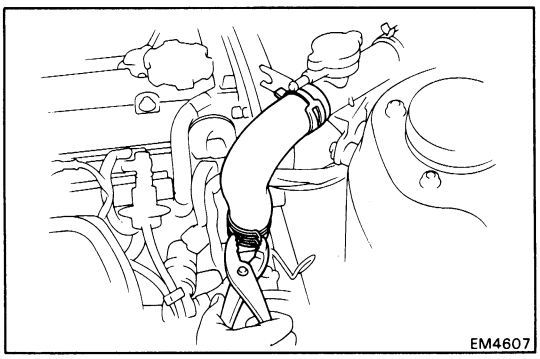

17. DISCONNECT NO. 1 RADIATOR HOSE FROM WATER OUTLET HOUSING

18. DISCONNECT FOLLOWING CONNECTORS AND WIRES:

(a) (A/T vehicle)
Two neutral start switch connectors

(b) (A/T vehicle)
Solenoid connector

(c) (A/T vehicle)
Speed sensor connector

(d) Cold start injector time switch connector

(e) (M/T vehicle)
Back-up light switch connector

(f) Ground strap from water inlet housing

(g) Two engine wire connectors

(h) Check connector

(i) High-tension cord from ignition coil

(j) Igniter connector

(k) Noise filter connector

(l) Engine compertment cooling fan connector

(m) Ground strap connector (between cylinder head and body)

(n) (w/ A/C)
Two A/C compressor connectors

(o) Solenoid resistor connector

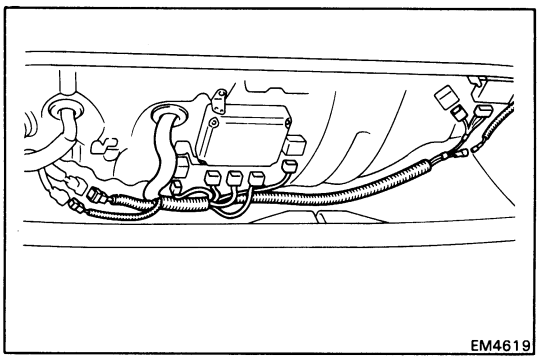

19. PULL OUT ENGINE WIRE HARNESS TO ENGINE COMPARTMENT

(a) Remove the five clips and rear luggage compartment trim.

(b) Disconnect the following connectors:

- Circuit opening relay connector
- ECU connectors
- Cooling fan computer connector
- Supercharger relay connector
- IC regulator connector
- Engine wire and engine main wire connectors

(c) Pull out the wire harness to the engine compartment.

20. (w/ A/C)
REMOVE A/C DRIVE BELT

Loosen the idle pulley lock nut and adjusting bolt, and remove the drive belt.

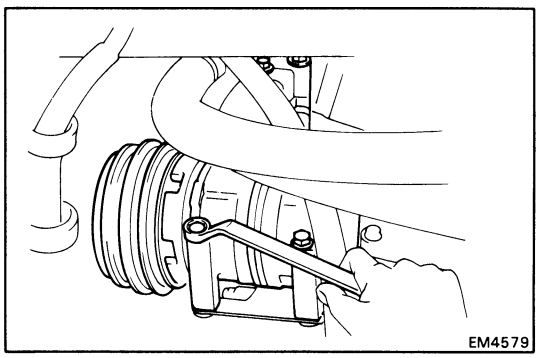

21. (w/ A/C)
DISCONNECT A/C COMPRESSOR

(a) Remove the four compressor mounting bolts.

(b) Move the compressor aside and suspend it.

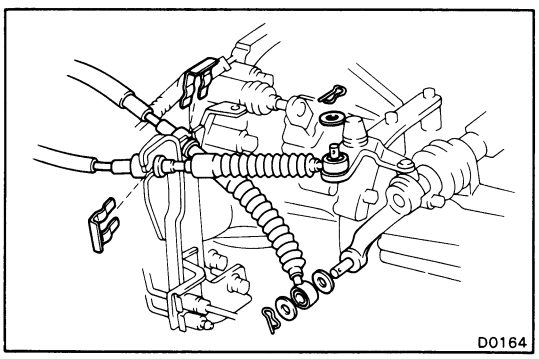

22. DISCONNECT CONTROL CABLES

(M/T vehicle)

(a) Remove the clips, washers and retainers.

(b) Disconnect the control cables from the shift outer lever and select lever.

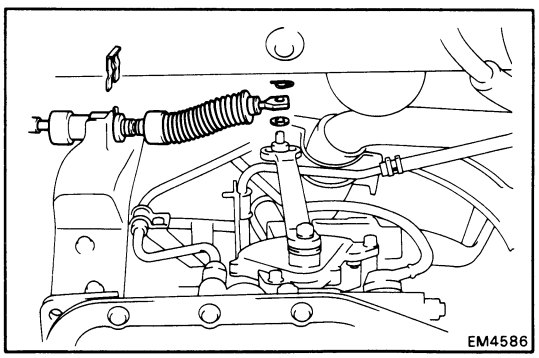

(A/T vehicle)

(a) Remove the clip and retainer.

(b) Disconnect the control cable from the shift lever.

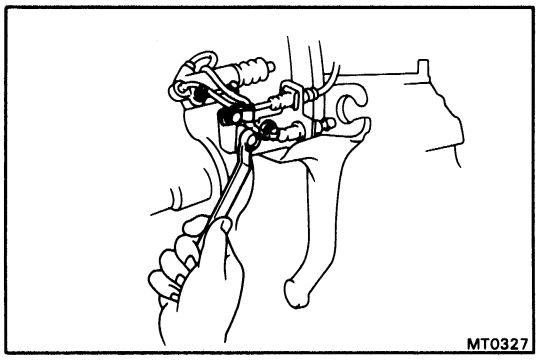

23. (M/T vehicle)
REMOVE CLUTCH RELEASE CYLINDER AND CONTROL BRACKET

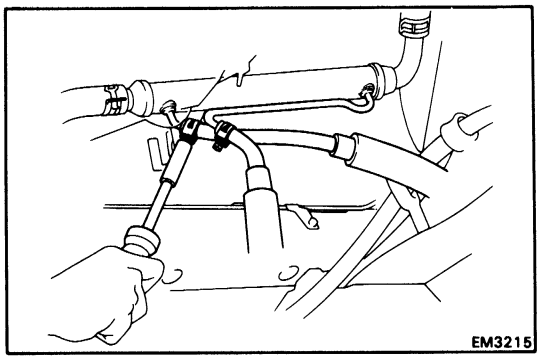

24. DISCONNECT ENGINE OIL COOLER HOSES

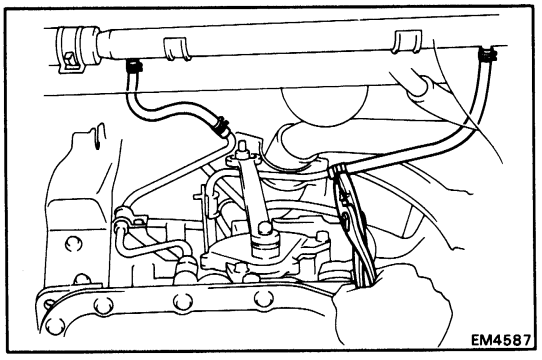

25. (A/T vehicle)
DISCONNECT A/T OIL COOLER HOSES

26. REMOVE FRONT EXHAUST PIPE
(See page LU-5)

27. REMOVE REAR DRIVE SHAFTS
(See page RA-16)

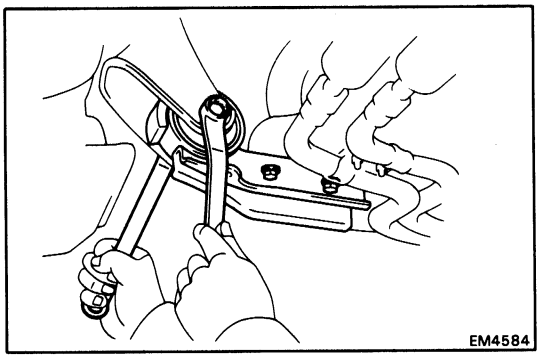

28. REMOVE FRONT MOUNTING INSULATOR

(a) Remove the mounting through bolt.

(b) Remove the two mount bolts and insulator.

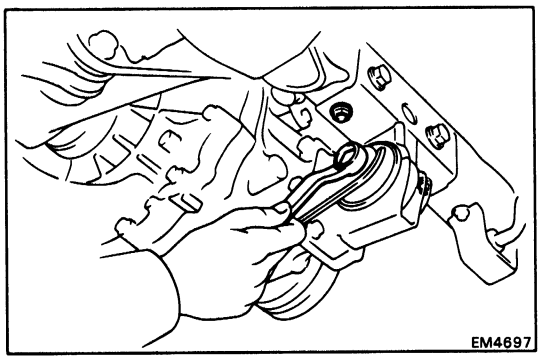

29. REMOVE REAR MOUNTING INSULATOR

(a) Remove the mounting through bolt.

(b) Remove the four mount bolts and insulator.

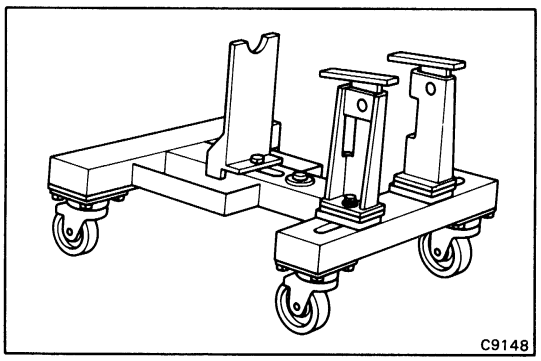

30. REMOVE ENGINE WITH TRANSAXLE

NOTE: Prepare an engine saddle in advance as shown.

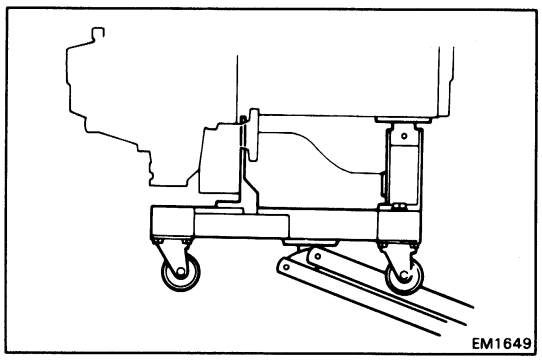

(a) Lower the vehicle while supporting the engine with the engine saddle.

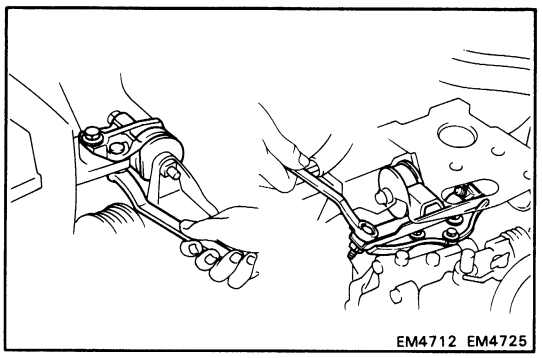

(b) Remove the two bolts and nuts holding the RH mounting bracket and RH mounting insulator.

(c) Remove the two (M/T) or three (A/T) bolts holding the LH mounting insulator and transaxle bracket.

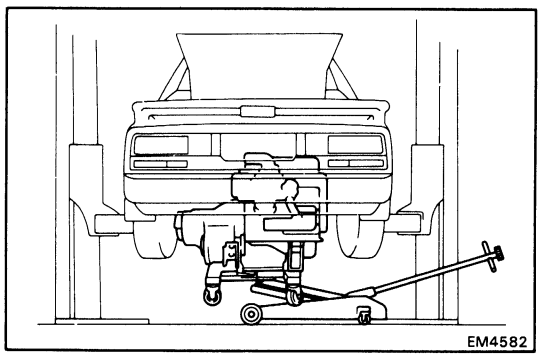

(d) Slowly raise the vehicle.

(e) Check that the engine is clear of all wiring, hoses and cables.

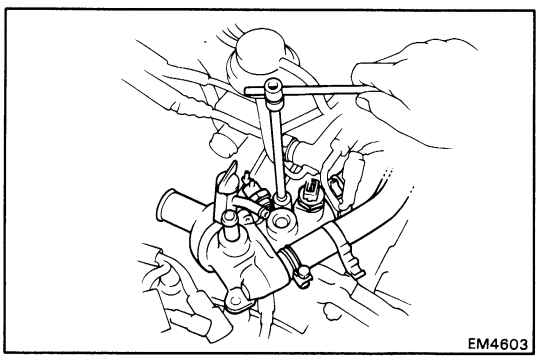

31. REMOVE WATER INLET WITH HOUSING

(a) Disconnect the vacuum hoses from BVSV.

(b) Remove the water inlet with housing mounting nut.

(c) Disconnect the two hoses from the No. 1 and No. 2 water by-pass pipes, and remove the water inlet housing.

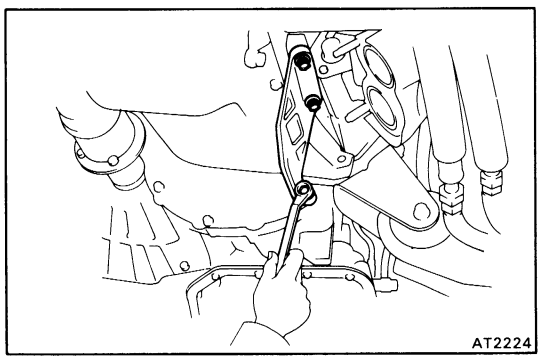

32. REMOVE FLYWHEEL HOUSING UNDER COVER

(a) (A/T vehicle)
Remove the three bolts and stiffener plate.

(b) Remove the three bolts (M/T) or two bolts (A/T) and under cover.

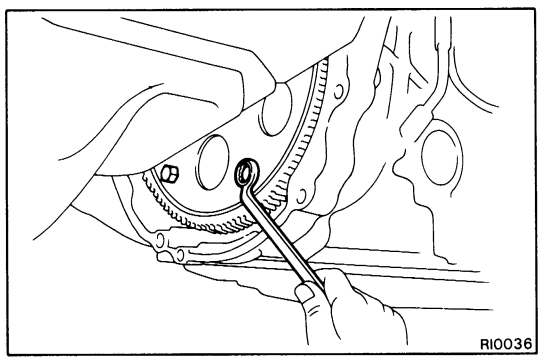

33. (A/T vehicle)
REMOVE SIX TORQUE CONVERTER MOUNTING BOLTS

Turn the crankshaft to gain access to each bolt. Remove the six bolts.

34. REMOVE STARTER (See page ST-3)

35. REMOVE TRANSAXLE FROM ENGINE

PREPARATION FOR DISASSEMBLY

1. (M/T)
   REMOVE CLUTCH COVER AND DISC

2. (M/T)
   REMOVE FLYWHEEL

3. (A/T)
   REMOVE DRIVE PLATE

4. REMOVE REAR END PLATE

5. INSTALL ENGINE TO ENGINE STAND FOR ASSEMBLY

6. (w/ A/C)
   REMOVE A/C COMPRESSOR BRACKET

7. (4A-GE)
   REMOVE ALTERNATOR BRACKET

8. (4A-GZE)
   REMOVE ALTERNATOR AND BRACKET

9. REMOVE DISTRIBUTOR (See page IG-9)

10. REMOVE TIMING BELT (See page EM-15)

11. REMOVE CYLINDER HEAD
    4A-GE (See page EM-26)
    4A-GZE (See page EM-55)

12. REMOVE WATER PUMP (See page CO-7)

13. REMOVE OIL FILTER BRACKETS
    (See steps 3 to 6 on pages LU-13, 14)

14. REMOVE OIL PAN, STRAINER, BAFFLE PLATE AND OIL PUMP
    (See steps 7 to 11 on pages LU-6, 7)

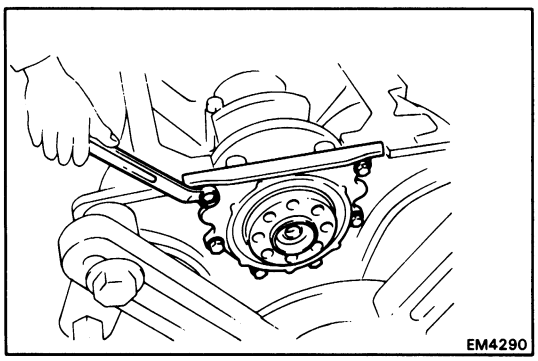

DISASSEMBLY OF CYLINDER BLOCK

(See page EM-66)

1. REMOVE REAR OIL SEAL RETAINER

Remove the six bolts, rear oil seal retainer and gasket.

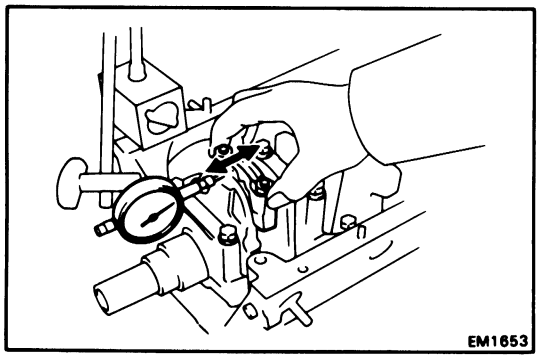

2. MEASURE CONNECTING ROD THRUST CLEARANCE

Using a dial indicator, measure the thrust clearance while moving the rod back and forth.

Standard thrust clearance: 0.15 – 0.25 mm (0.0059 – 0.0098 in.)
Maximum thrust clearance: 0.30 mm (0.0118 in.)

If the clearance is greater than maximum, replace the connecting rod assembly. If necessary, replace the crankshaft.

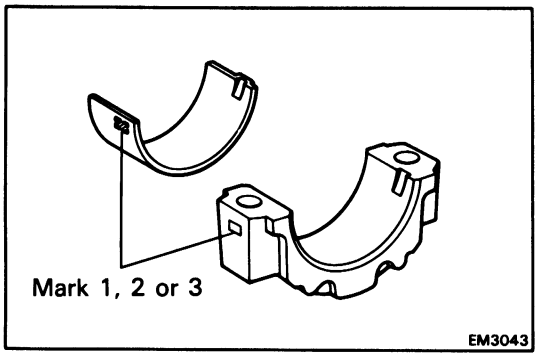

3. REMOVE ROD CAPS AND MEASURE OIL CLEARANCE

NOTE: If replacing the bearing, replace with one having the same number as marked on the bearing cap.
There are three sizes of standard bearings supplied, marked 1, 2 or 3 respectively.

Bearing thickness (at center wall):

STD

Mark 1	**1.486 – 1.490 mm (0.0585 – 0.0587 in.)**
Mark 2	**1.490 – 1.494 mm (0.0587 – 0.0588 in.)**
Mark 3	**1.494 – 1.498 mm (0.0588 – 0.0590 in.)**

U/S

0.25	**1.607 – 1.613 mm (0.0633 – 0.0635 in.)**

(a) Using a punch or numbering stamp, place the matchmarks on the rod and cap to ensure correct assembly.

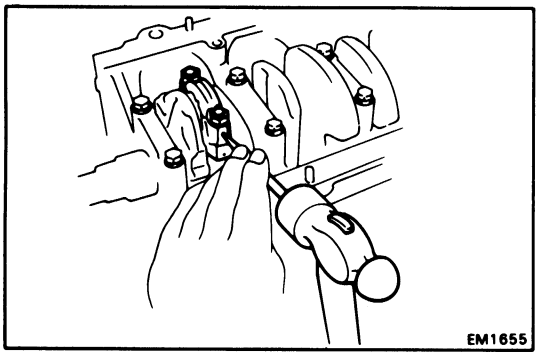

(b) Remove the rod cap nuts.

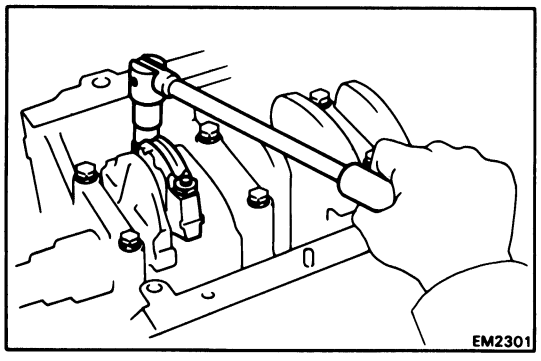

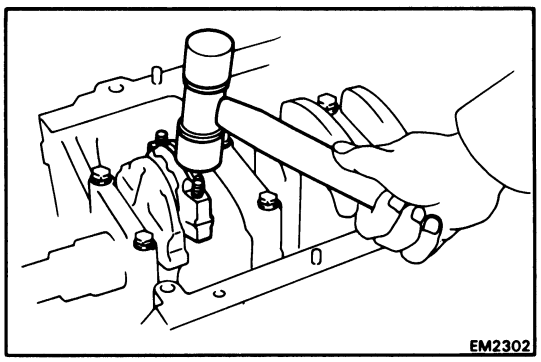

(c) Using a plastic-faced hammer, lightly tap the connecting rod bolt and lift off the cap and lower bearing.

NOTE: Keep the lower bearing inserted with the cap.

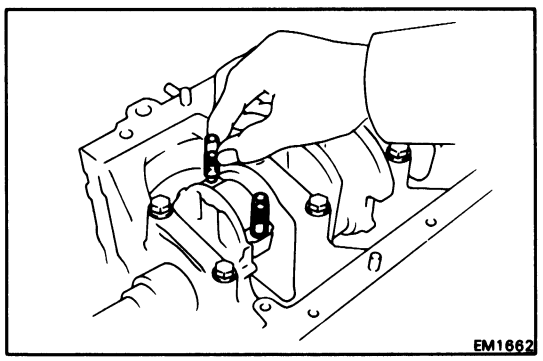

(d) Cover the connecting rod bolts with a short piece of hose to protect the crankshaft from damage.

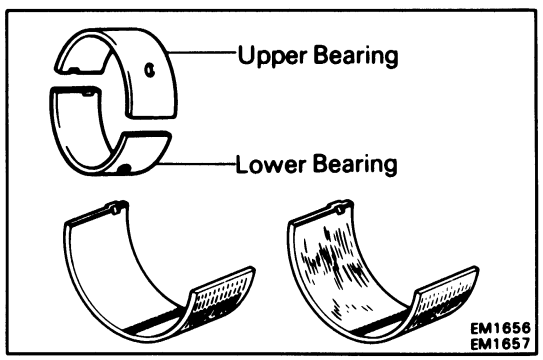

(e) Clean the crank pin and bearing.

(f) Check the crank pin and bearing for pitting and scratches.

If the crank pin or bearing are damaged, replace the bearing. If necessary, grind or replace the crankshaft.

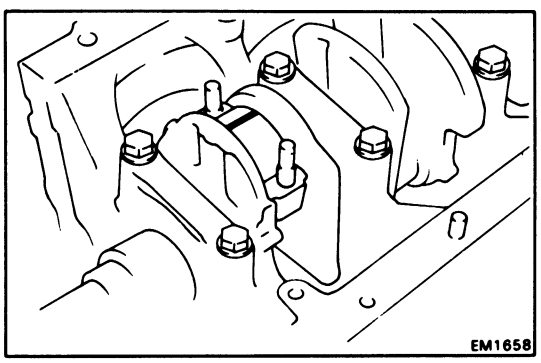

(g) Lay a strip of Plastigage across the crankshaft pin.

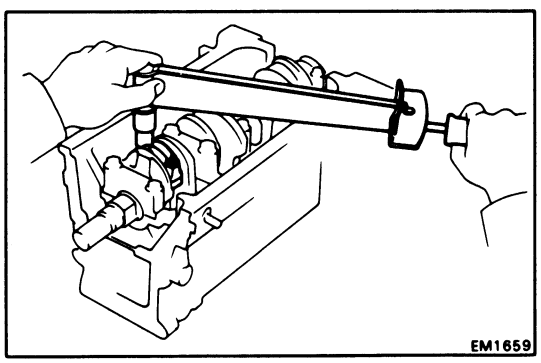

(h) Install the connecting rod cap.
(See step 6 on page EM-98)

NOTE: Do not turn the crankshaft.

(i) Remove the rod cap. (See procedure (b) and (c) above.)

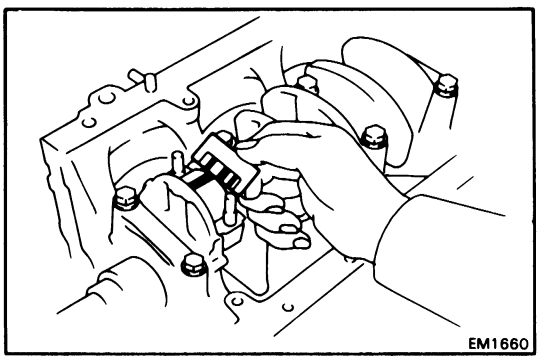

(j) Measure the Plastigage at its widest point.

Standard oil clearance:

STD	**0.020 – 0.051 mm (0.0008 – 0.0020 in.)**
U/S 0.25	**0.019 – 0.073 mm (0.0007 – 0.0029 in.)**
Maximum oil clearance:	**0.08 mm (0.0031 in.)**

If the clearance is greater than maximum, replace the bearings. If necessary, grind or replace the crankshaft.

(k) Completely remove the Plastigage.

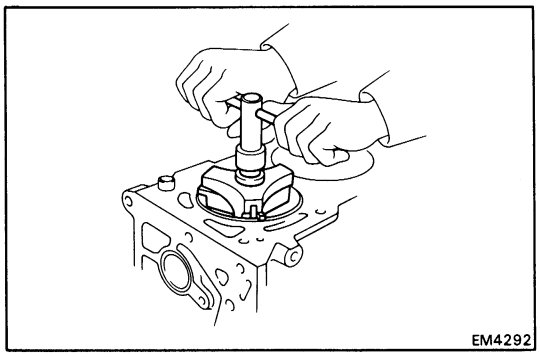

4. PUSH OUT PISTON AND CONNECTING ROD ASSEMBLIES

(a) Remove all the carbon from the top of the cylinder.

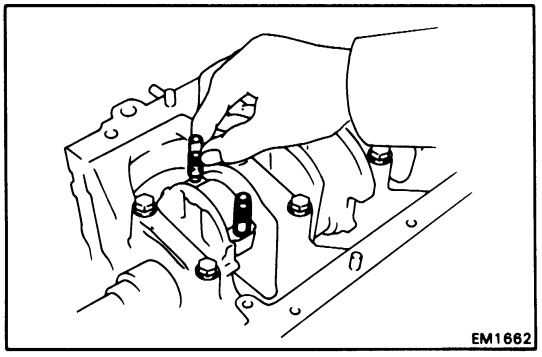

(b) Cover the rod bolts with a short piece of hose to protect the crankshaft from damage.

(c) Push out the piston and connecting rod assembly and the upper bearing through the top of the cylinder block.

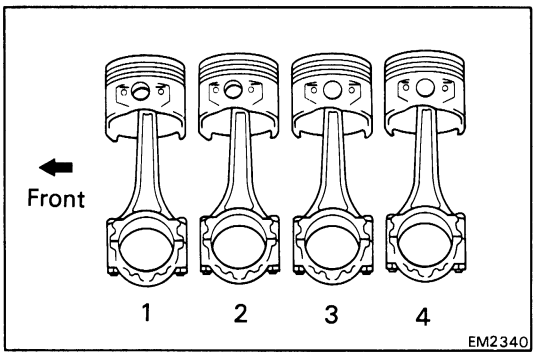

NOTE:
- Keep the inserted bearing, connecting rod and cap together.
- Arrange the piston and connecting rod assemblies in correct order.

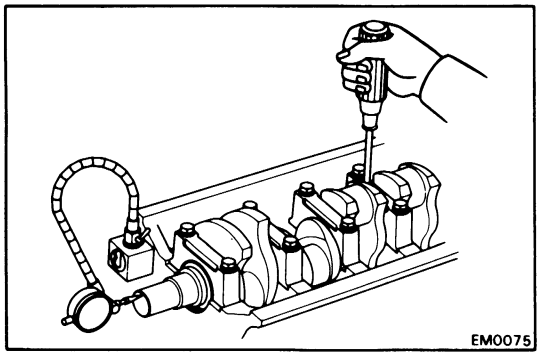

5. CHECK CRANKSHAFT THRUST CLEARANCE

Using a dial indicator, measure the thrust clearance while prying the crankshaft back and forth with a screwdriver.

Standard thrust clearance: 0.02 – 0.22 mm (0.0008 – 0.0087 in.)

Maximum thrust clearance: 0.30 mm (0.0118 in.)

If the clearance is greater than maximum, replace the thrust washers as a set.

Thrust washer thickness: 2.440 – 2.490 mm (0.0961 – 0.0980 in.)

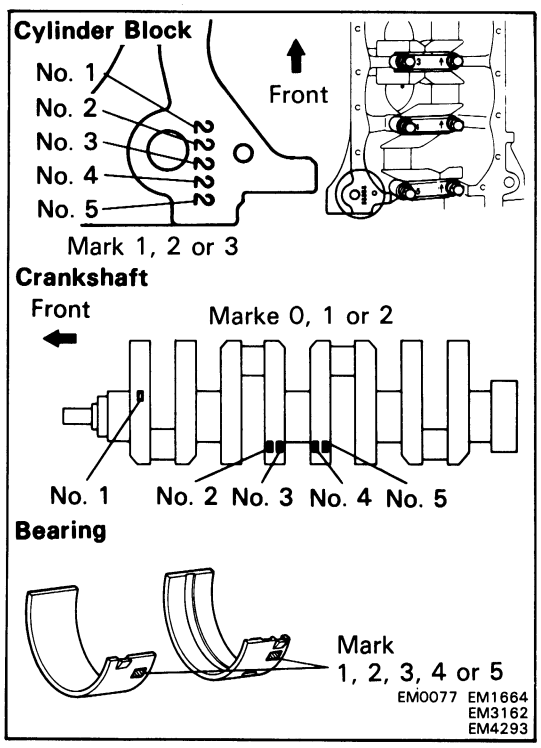

6. REMOVE MAIN BEARING CAPS AND MEASURE OIL CLEARANCE

NOTE: If replacing a bearing, replace with one having the same number. If the number of the bearing cannot be determined, select a bearing from the table below according to the numbers imprinted on the cylinder block and crankshaft.

	Number marked								
Cylinder Block	1	2	3	1	2	3	1	2	3
Crankshaft	0	0	0	1	1	1	2	2	2
Bearing	1	2	3	2	3	4	3	4	5

Example: Cylinder Block "2", Crankshaft "1" = Bearing "3"

(Reference)

mm (in.)

No.	Cylinder block main journal bore	No.	Crankshaft diameter	No.	★ Bearing thickness
1	52.025-52.031 (2.0482-2.0485)	0	47.994-48.000 (1.8895-1.8898)	1	2.002-2.005 (0.0788-0.0789)
				2	2.005-2.008 (0.0789-0.0791)
2	52.031-52.037 (2.0485-2.0487)	1	47.988-47.994 (1.8893-1.8895)	3	2.008-2.011 (0.0791-0.0792)
				4	2.011-2.014 (0.0792-0.0793)
3	52.037-52.043 (2.0487-2.0489)	2	47.982-47.988 (1.8891-1.8893)	5	2.014-2.017 (0.0793-0.0794)

★ Bearing thickness = Center wall thickness

Bearing thickness (at center wall):
U/S 0.25
2.121 – 2.127 mm (0.0835 – 0.0837 in.)

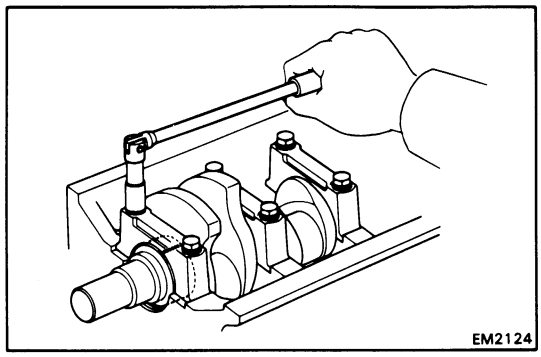

(a) Remove the bearing caps with the lower bearing and lower thrust washers (No. 3 cap only).

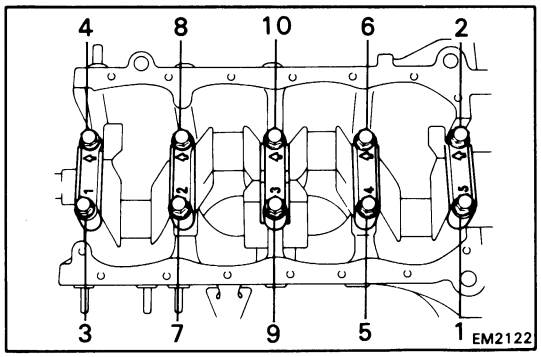

NOTE: Uniformaly loosen and remove the main bearing cap bolts in several passes, in the sequence shown.

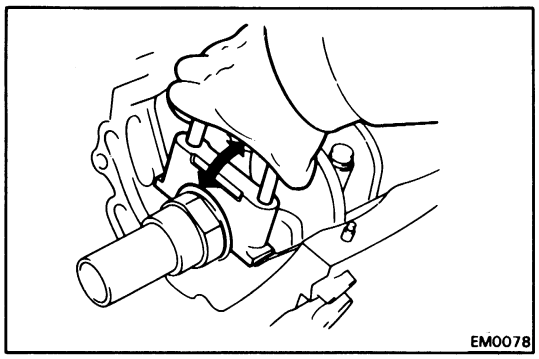

(b) Using the removed bearing cap bolts, wiggle the bearing cap back and forth, and remove it with the lower bearing and thrust washers (No. 3 journal only).

NOTE:

- Keep the lower bearing inserted with the cap.
- Arrange the caps and lower thrust washers in correct order.

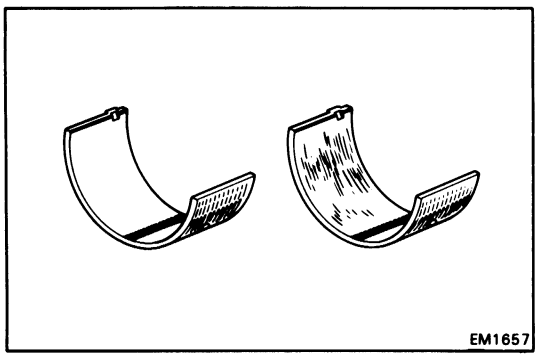

(c) Lift off the crankshaft.

NOTE: Keep the upper bearings and upper thrust washers (No. 3 journal only) inserted in the cylinder block.

(d) Clean the journals and bearings.

(e) Check the journals and bearings for pitting and scratches.

If the journal or bearing is damaged, grind or replace the bearing. If necessary, replace the crankshaft.

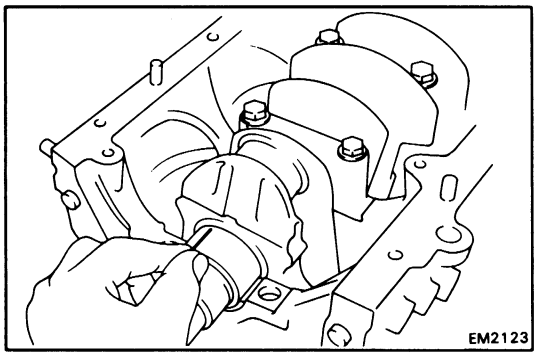

(f) Place the crankshaft on the cylinder block.

(g) Lay a strip of plastigage across each journal.

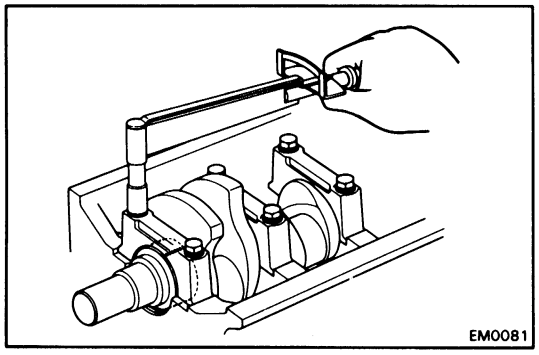

(h) Install the bearing caps with the lower bearing and lower thrust washers (No. 3 cap only).
(See step 4 on page EM-96)

Torque: 610 kg-cm (44 ft-lb, 60 N·m)

NOTE: Do not turn the crankshaft.

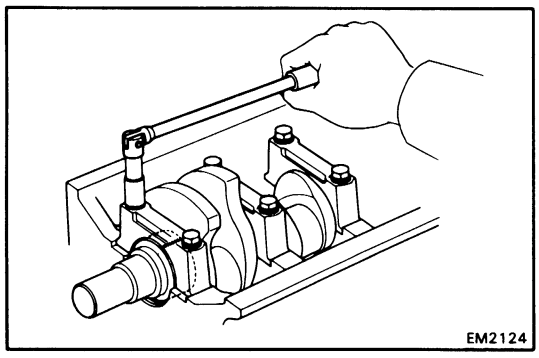

(i) Remove the bearing caps with the lower bearing and lower thrust washers.
(See procedure (a) and (b) above)

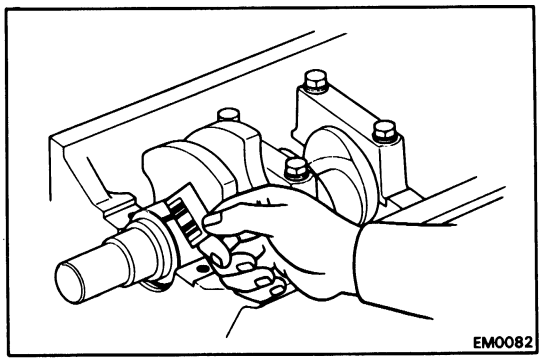
EM0082

(j) Measure the Plastigage at its widest point.

Standard oil clearance:

STD	**0.015 – 0.033 mm (0.0006 – 0.0013 in.)**
U/S 0.25	**0.013 – 0.053 mm (0.0005 – 0.0021 in.)**

Maximum oil clearance: 0.10 mm (0.0039 in.)

NOTE: If replacing the cylinder block subassembly, the bearing standard clearance will be:
0.015 – 0.045 mm (0.0006-0.0018 in.).

If the clearance is greater than maximum, replace the bearings. If necessary, grind or replace the crankshaft.

(k) Completely remove the Plastigage.

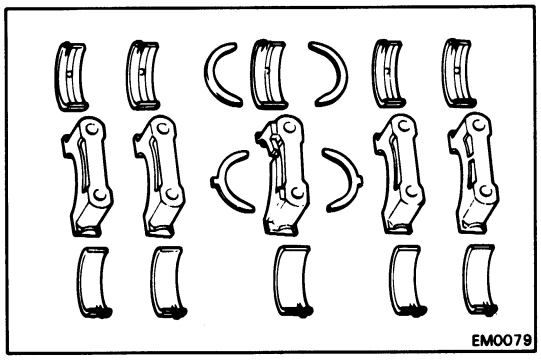
EM0079

7. REMOVE CRANKSHAFT

(a) Lift out the crankshaft.

(b) Remove the upper bearings and upper thrust washers from the cylinder block.

NOTE:
- Arrange the caps, bearings and thrust washers in correct oreder.
- The pilot bearing in the crankshaft rear end is permanently lubricated and requires no cleaning or lubrication.

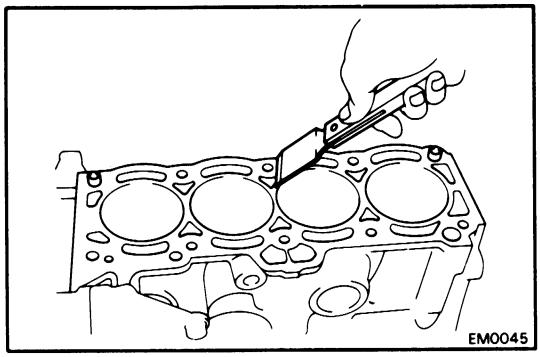
EM0045

INSPECTION OF CYLINDER BLOCK

1. REMOVE GASKET MATERIAL

Using a gasket scraper, remove all gasket material from the cylinder block surface.

2. CLEAN CYLINDER BLOCK

Using a soft brush and solvent, clean the block.

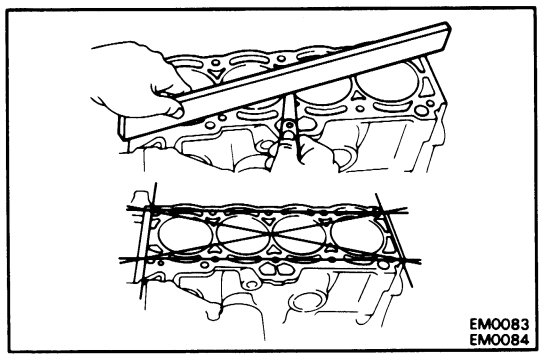
EM0083
EM0084

3. INSPECT TOP OF BLOCK

Using a precision straight edge and thickness gauge, check the surface contacting the cylinder head gasket for warpage.

Maximum warpage: 0.05 mm (0.0020 in.)

If warpage is greater than maximum, replace the cylinder block.

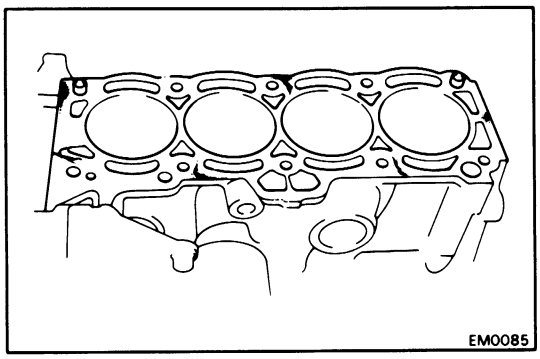
EM0085

4. INSPECT CYLINDERS

Visually inspect cylinders for vertical scratches.

If deep scratches are present, rebore the cylinder.

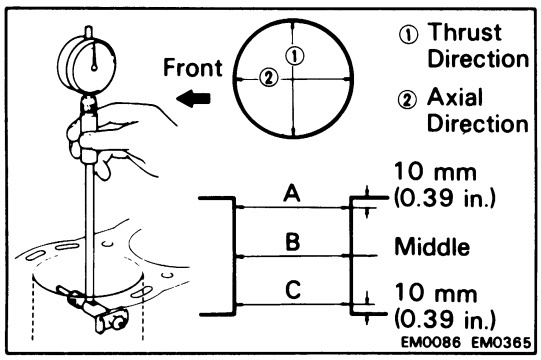

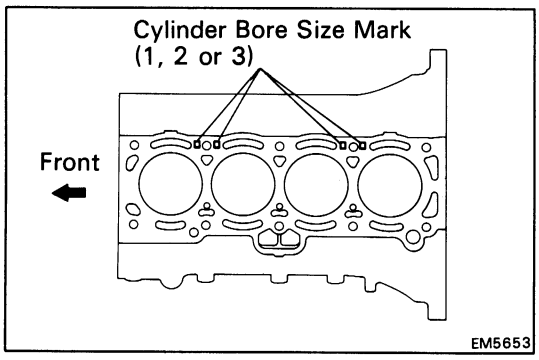

5. INSPECT CYLINDER BORE DIAMETER

Using a cylinder gauge, measure the cylinder bore diameter at positions A, B and C in the thrust and axial directions.

NOTE: There are three sizes of the standard cylinder bore diameter, marked "1", "2", and "3", accordingly. The marked is stamped on the cylinder block.

Standard diameter:

STD

Mark "1"	**81.00 – 81.01 mm (3.1890 – 3.1894 in.)**
Mark "2"	**81.01 – 81.02 mm (3.1894 – 3.1898 in.)**
Mark "3"	**81.02 – 81.03 mm (3.1898 – 3.1902 in.)**

Maximum diameter:

STD	**81.23 mm (3.1980 in.)**
O/S 0.50	**81.73 mm (3.2177 in.)**

If the diameter is greater than maximum, rebore all four cylinders, or replace the cylinder block.

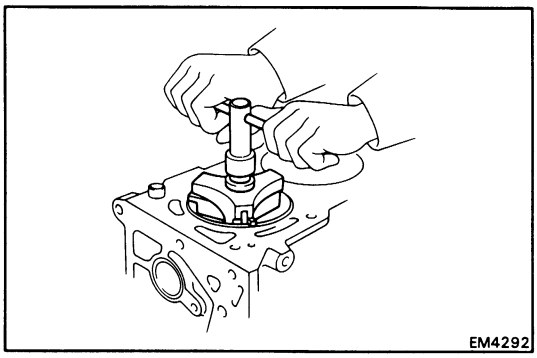

6. REMOVE CYLINDER RIDGE

If the wear is less than 0.2 mm (0.008 in.), use a ridge reamer to machine the top of the cylinder.

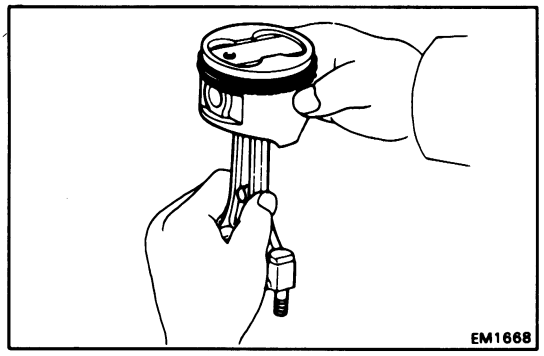

DISASSEMBLY OF PISTON AND CONNECTING ROD ASSEMBLIES

1. CHECK FIT BETWEEN PISTON AND PIN

Try to move the piston back and forth on the piston pin.

If any movement is felt, replace the piston and pin as set.

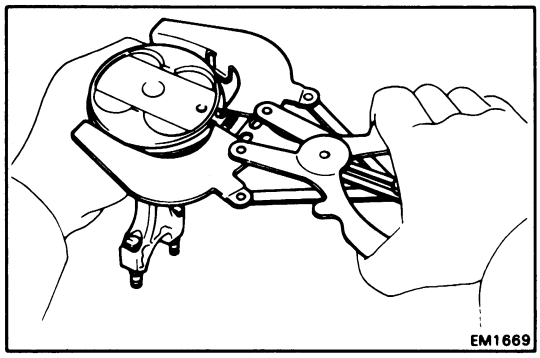

2. REMOVE PISTON RINGS

(a) Using a piston ring expander, remove the compression rings.

(b) Remove the two side rails and oil ring expander by hand.

NOTE: Arrange the rings in the correct order.

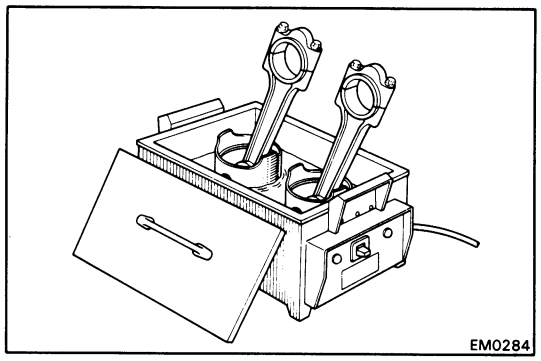

3. DISCONNECT CONNECTING ROD FROM PISTON

(a) Using needle-nose pliers, remove the snap rings.

(b) Gradually heat the piston to 70 – 80°C (158 – 176°F).

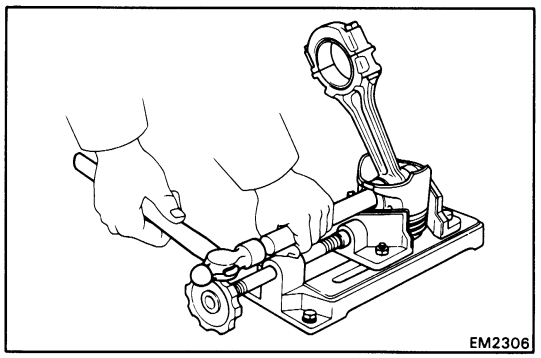

(c) Using a plastic-faced hammer and brass bar, lightly tap out the piston pin and remove the connecting rod.

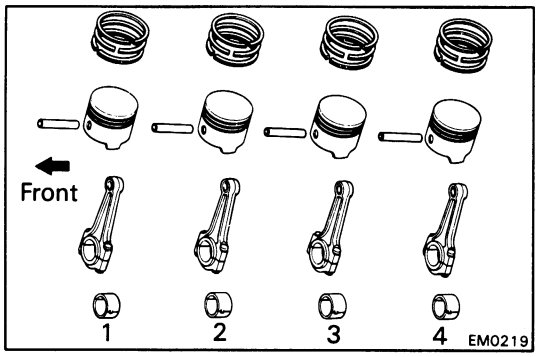

NOTE:
- The piston and pin are a matched set.
- Arrange the piston, pins, rings, connecting rods and bearing in correct order.

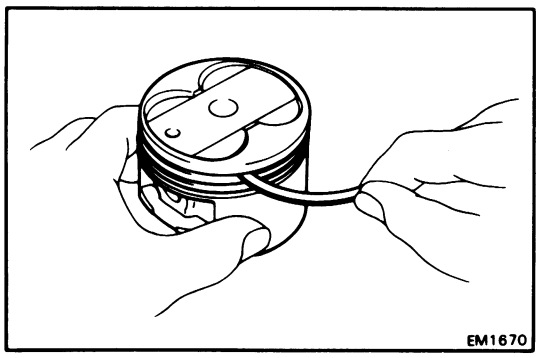

INSPECTION OF PISTON AND CONNECTING ROD ASSEMBLIES

1. CLEAN PISTON

(a) Using a gasket scraper, remove the carbon from the piston top.

(b) Using a groove cleaning tool or broken ring, clean the ring grooves.

(c) Using a soft brush and solvent, thoroughly clean the piston.

CAUTION: Do not damage the piston.

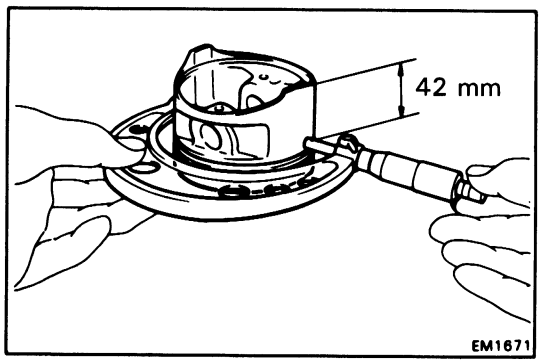

2. INSPECT PISTON DIAMETER AND OIL CLEARANCE

(a) Using a micrometer and with the piston upside down, measure the piston diameter at right angles to the piston pin center line, 42 mm (1.65 in.) from the skirt bottom edge.

NOTE: There are three sizes of the standard piston diameter, marked "1", "2", and "3", accordingly. The marked is stamped on the top of the piston.

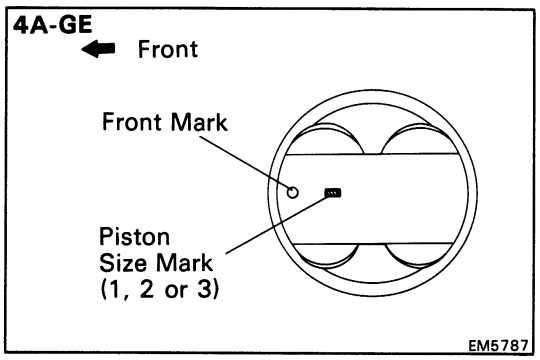

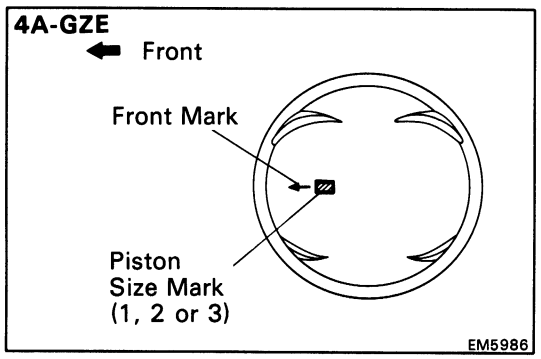

Piston diameter:

4A-GE

STD

Mark "1"	**80.890 – 80.900 mm (3.1846 – 3.1850 in.)**
Mark "2"	**80.900 – 80.910 mm (3.1850 – 3.1854 in.)**
Mark "3"	**80.910 – 80.920 mm (3.1854 – 3.1858 mm)**
O/S 0.50	**81.390 – 81.420 mm (3.2043 – 3.2055 in.)**

4A-GZE

STD

Mark "1"	**80.870 – 80.880 mm (3.1839 – 3.1842 in.)**
Mark "2"	**80.880 – 80.890 mm (3.1842 – 3.1846 in.)**
Mark "3"	**80.890 – 80.900 mm (3.1846 – 3.1850 mm)**
O/S 0.50	**81.370 – 81.400 mm (3.2035 – 3.2047 in.)**

(b) Measure the cylinder bore diameter in thrust directions (See page EM-86) and subtract the piston diameter measurement from the cylinder bore diameter measurement.

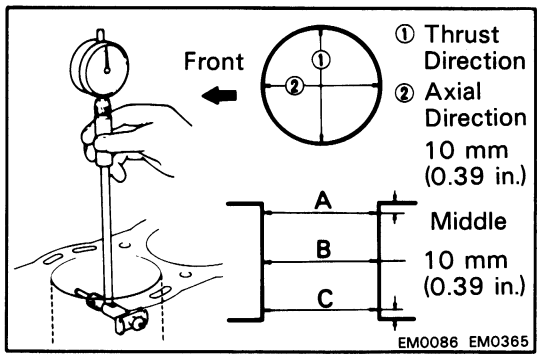

Piston clearance:

4A-GE 0.10 – 0.12 mm (0.0039 – 0.0047 in.)
4A-GZE 0.12 – 0.14 mm (0.0047 – 0.0055 in.)

If not within specification, replace the pistons. If necessary, rebore or replace the cylinder block.

NOTE: (Use cylinder block sub-assembly)
When installing a standard piston, install one with the same mark as the standard bore diameter mark on the cylinder block.

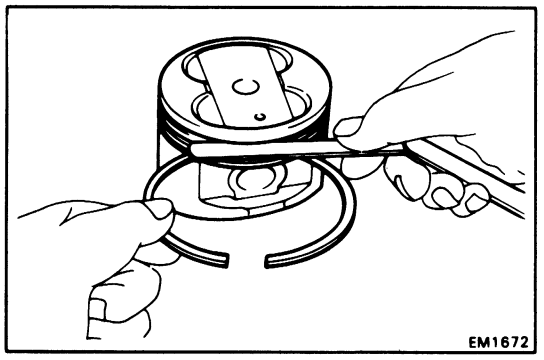

3. INSPECT PISTON RING GROOVE CLEARANCE

Using a thickness gauge, measure the clearance between the new piston ring and the ring land.

Piston ring groove clearance:

No. 1 0.04 – 0.08 mm (0.0016 – 0.0031 in.)
No. 2 0.03 – 0.07 mm (0.0012 – 0.0028 in.)

If the clearance is not within specification, replace the piston.

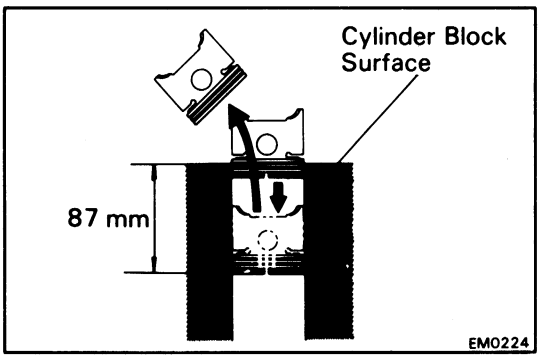

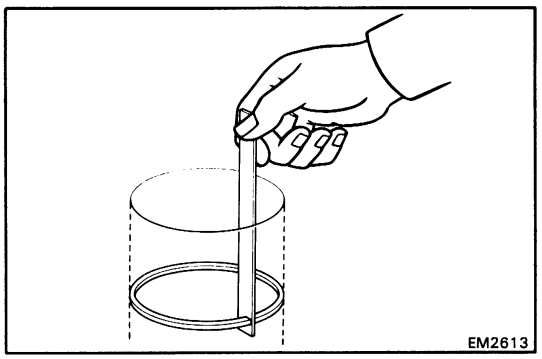

4. INSPECT PISTON RING END GAP

(a) Insert the piston ring into the cylinder bore.

(b) Using a piston, push the piston ring a little beyond the bottom of the ring travel to 87 mm (0.43 in.) from the top surface of the cylinder block.

(c) Using a thickness gauge, measure the end gap.

Standard piston ring end gap:

No. 1 0.25 – 0.47 mm (0.0098 – 0.0185 in.)

No. 2 0.20 – 0.42 mm (0.0079 – 0.0165 in.)

Oil Code mark T 0.15 – 0.52 mm (0.0059 – 0.0205 in.)

Code mark R 0.30 – 1.02 mm (0.0118 – 0.0402 in.)

Maximum piston ring end gap:

No. 1 1.07 mm (0.0421 in.)

No. 2 1.02 mm (0.0402 in.)

Oil Code mark T 1.12 mm (0.0441 in.)

Code mark R 1.62 mm (0.0638 in.)

If the gap is greater than maximum, replace the piston ring.

If the gap is greater than maximum, even with a new piston ring, rebore the cylinder and use an O/S piston ring.

NOTE: The code mark is engraved on top of the No. 1 and No. 2 piston rings. (See page EM-96)

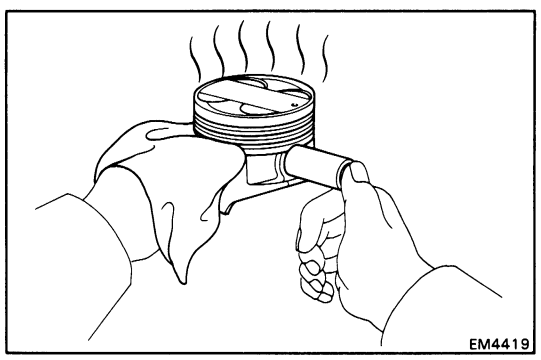

5. INSPECT PISTON PIN FIT

As 80°C (176°F) you should be to push the piston pin into the piston pin hole with your thumb.

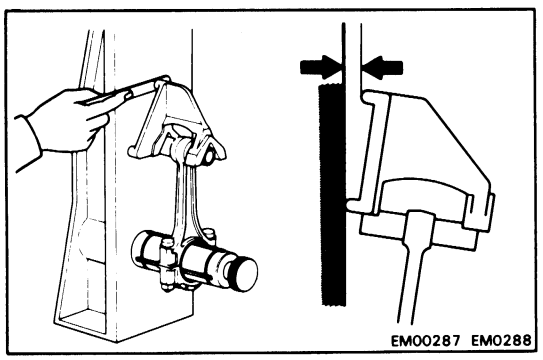

6. INSPECT CONNECTING RODS

Using a rod aligner, check the connecting rod alignment.

(a) Check for bend.

Maximum bend:

0.03 mm (0.0012 in.) per 100 mm (3.94 in.)

If bend is greater than maximum, replace the connecting rod assembly.

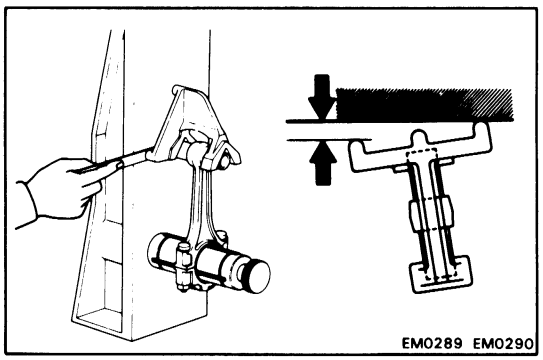

(b) Check for twist.

Maximum twist:
0.05 mm (0.0020 in.) per 100 mm (3.94 in.)

If twist is greater than maximum, replace the connecting rod assembly.

NOTE: If replacing the connecting rod, replace the same number of connecting rod bearings as that of new connecting rod caps. (See page EM-80)

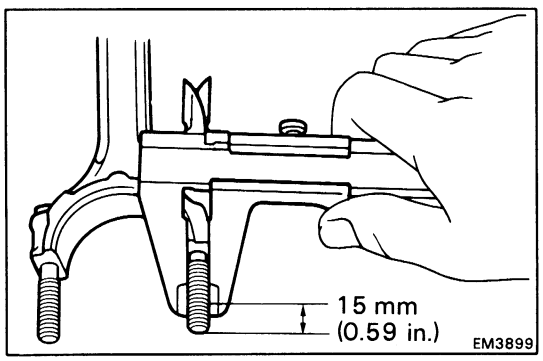

7. (12-sided nut type)
INSPECT CONNECTING ROD BOLTS

(a) Fix a connecting rod cap nut each of the connecting rod bolts threads and check that the nut can be turned by hand to the end of the threads.

(b) If a nut cannot be moved all the way down the threads, measure the compressed thread outer diameter with a measuring gauge.

(c) If the location of this area cannot be judgen by visual inspection, use the dimension locations in the illustration and measure the outer diameter.

Standard diameter: **8.860 – 9.000 mm (0.3488 – 0.3543 in.)**
Minimum diameter: **8.60 mm (0.3386 in.)**

If the outer diameter is less than minimum, replace the connecting rod bolt and connecting rod cap nut.

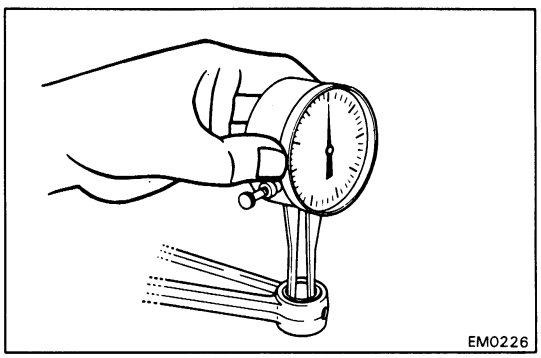

8. INSPECT PISTON PIN OIL CLEARANCE

(a) Using a caliper gauge, measure the inside diameter of the connecting rod bushing.

Bushing inside diameter: **20.010 – 20.022 mm (0.7878 – 0.7883 in.)**

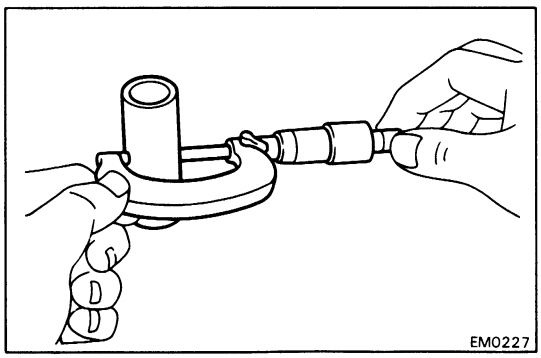

(b) Using micrometer, measure the piston pin diameter.

Piston pin diameter: **20.004 – 20.016 mm (0.7876 – 0.7880 in.)**

(c) Subtract the piston pin diameter measurement from the bushing inside diameter measurement.

Standard oil clearance: 0.004 – 0.008 mm (0.0002 – 0.0003 in.)
Maximum oil clearance: 0.05 mm (0.0020 in.)

If clearance is greater than maximum, replace the bushing.

If necessary, replace the piston and piston pin assembly.

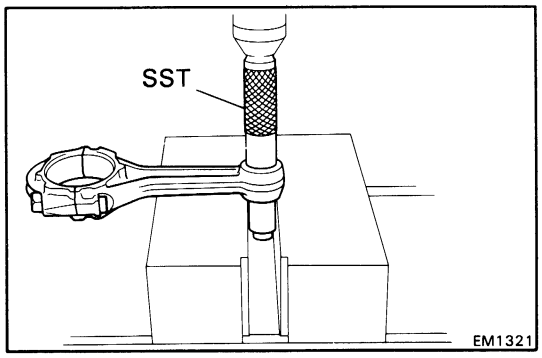

9. IF NECESSARY, REPLACE CONNECTING ROD BUSHINGS

(a) Using SST and a press, push out the bushing.

SST 09222-30010

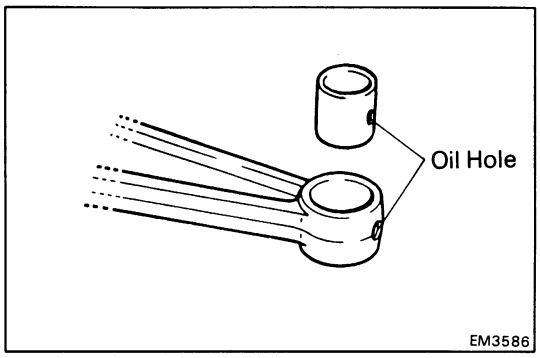

(b) Align the oil holes of a new bushing and connecting rod.

(c) Using SST and a press, press in the bushing.

SST 09222-30010

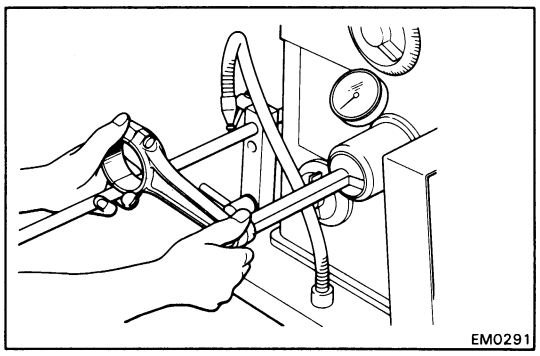

(d) Using a pin hole grinder, hone the bushing to obtain the standard specified clearance (See step 7) between the bushing and piston pin.

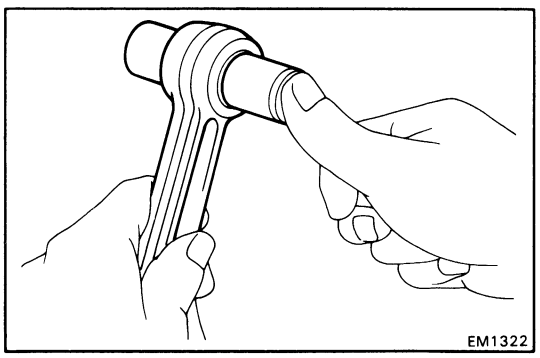

(e) Check the piston pin fit at normal room temperature.

Coat the piston pin with engine oil and push it into the connecting rod with your thumb.

BORING OF CYLINDERS

NOTE:
- Bore all four cylinders for the oversized piston outside diameter.
- Replace the piston rings with ones to match the oversized pistons.

1. KEEP OVERSIZED PISTON

Oversized piston diameter:

4A-GE	**O/S 0.50**	**81.390 – 81.420 mm (3.2043 – 3.2055 in.)**
4A-GZE	**O/S 0.50**	**81.370 – 81.400 mm (3.2035 – 3.2047 in.)**

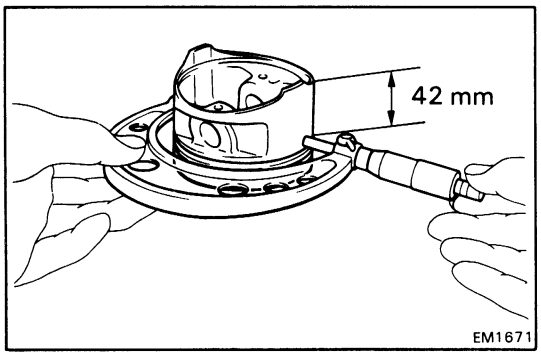

2. CALCULATE AMOUNT TO BORE CYLINDER

(a) Using a micrometer and with the piston upside down, measure the piston diameter at right angles to the piston pin center line, 42 mm (1.65 in.) from the skirt bottom edge.

(b) Calculate the amount each cylinder is to be rebored as follows:

Size to be rebore = P + C – H

P = Piston diameter

C = Piston clearance

4A-GE	**0.10 – 0.12 mm (0.0039 – 0.0047 in.)**
4A-GZE	**0.12 – 0.14 mm (0.0047 – 0.0055 in.)**

H = allowance for honing

Less than 0.02 mm (0.0008 in.)

3. BORE AND HONE CYLINDERS TO CALCULATED DIMENSIONS

Amount of honing: 0.02 mm (0.0008 in.) maximum

CAUTION: Excess honing will destroy the finished roundness.

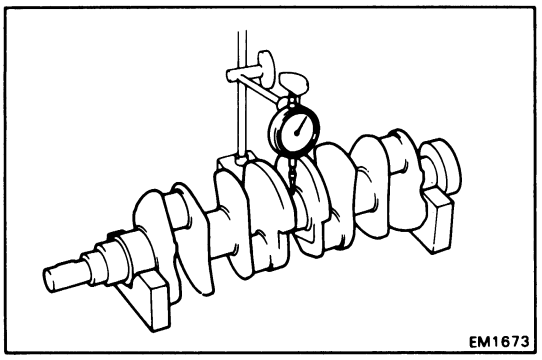

INSPECTION OF CRANKSHAFT

1. MEASURE CRANKSHAFT FOR RUNOUT

(a) Place the crankshaft on V-blocks.

(b) Using a dial indicator, measure the circle runout at the center journal.

Maximum circle runout: 0.06 mm (0.0024 in.)

If the circle runout is greater than the maximum, replace the crankshaft.

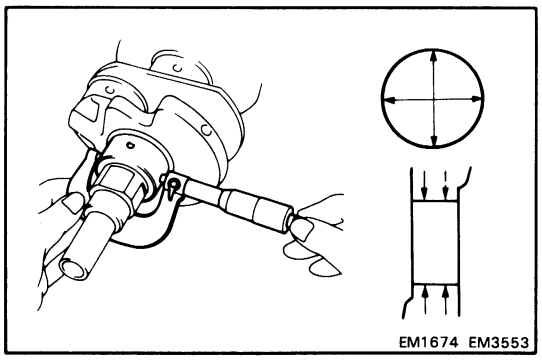

2. INSPECT MAIN JOURNALS AND CRANK PINS

(a) Using a micrometer, measure the diameter of the journal and crank pin.

Journal diameter: 47.982 – 48.000 mm (1.8891 – 1.8898 in.)
Crank pin diameter: 41.985 – 42.000 mm (1.6529 – 1.6535 in.)

(b) Measure the journal for out-of-round and taper as shown.

Maximum taper and out-of-round: 0.02 mm (0.0008 in.)

If taper or out-of-round is greater than maximum, regrind or replace the crankshaft.

3. GRIND CRANK PIN AND/OR MAIN JOURNAL IF NECESSARY

Grind the crank pins and/or main journals to the undersized finished diameter.

Install a new pin and/or main undersize bearings.

Bearing size (U/S 0.25)

Main journal finished diameter:
U/S 0.25
47.745 – 47.755 mm (1.8797 – 1.8801 in.)

Crank pin finished diameter:
U/S 0.25
41.745 – 41.755 mm (1.6435 – 1.6439 in.)

Taper and out-of-round limit: 0.02 mm (0.0008 in.)

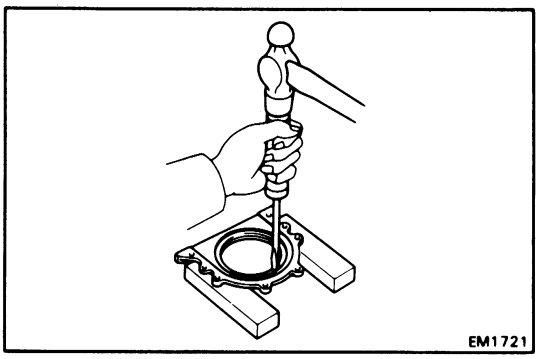

REPLACEMENT OF REAR OIL SEAL

NOTE: There are two methods to replace the oil seal depending on whether the rear oil seal retainer is assembled to the engine or not.

1. REPLACE CRANKSHAFT REAR OIL SEAL

(a) Using a screwdriver and hammer, tap out the oil seal.

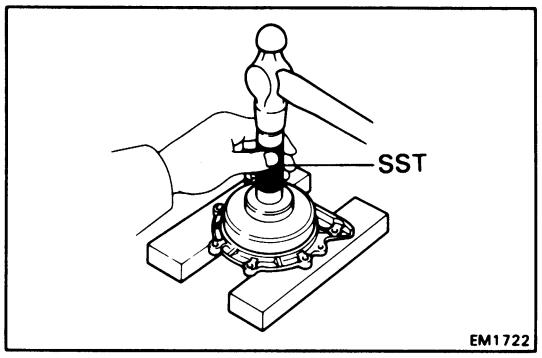

(b) Using SST and a hammer, tap in a new oil seal until its surface is flush with the rear oil seal retainer edge.

SST 09223-41020

NOTE: Be careful not to install the oil seal slantwise.

(c) Apply MP grease to the seal lip.

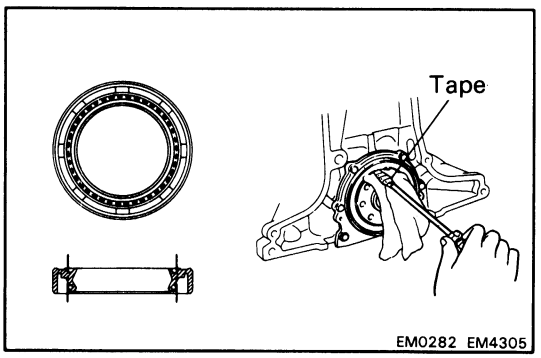

2. IF REAR OIL SEAL RETAINER IS INSTALLED ON CYLINDER BLOCK

(a) Using a knife, cut off the lip of the oil seal as shown.

(b) Using a screwdriver of taping tip, pry out the oil seal.

CAUTION: Be careful not to damage the crankshaft.

(c) Check the oil seal lip contact surface of the crankshaft for cracks or damage.

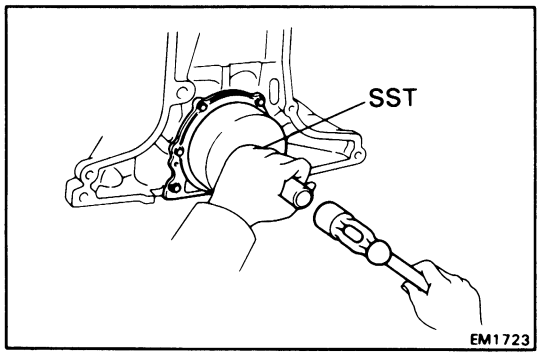

(d) Apply MP grease to a new oil seal lip.

(e) Using SST and a hammer, tap in the oil seal until its surface is flush with the rear oil seal retainer edge.

SST 09223-41020

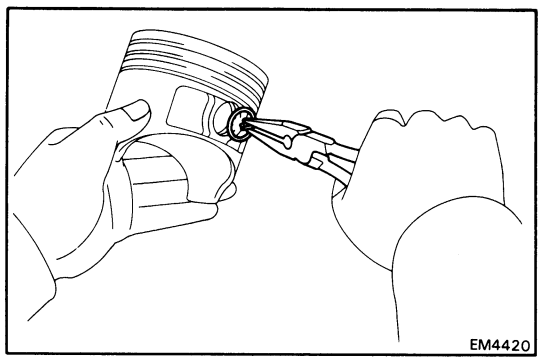

ASSEMBLY OF PISTON AND CONNECTING ROD

1. ASSEMBLE PISTON AND CONNECTING ROD

(a) Install a new snap ring one side of the piston pin hole.

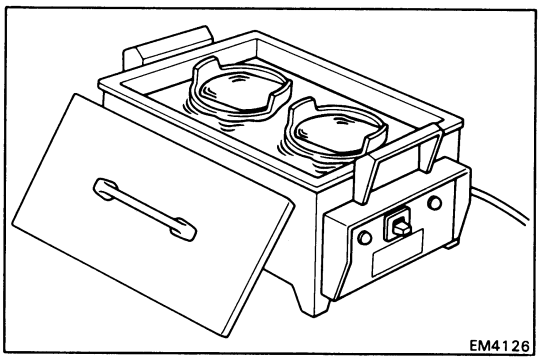

(b) Gradually heat the piston to 70 – 80°C (158 – 176°F).

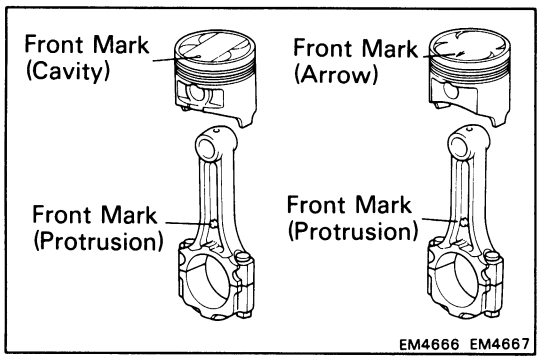

(c) Coat the piston pin with engine oil.

(d) Align the front marks of the piston and connecting rod.

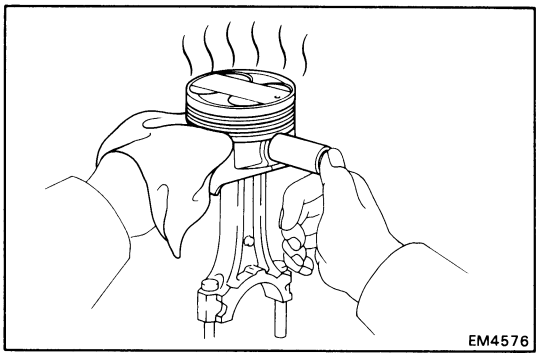

(e) Push in the piston pin with your thumb.

(f) Install a new snap ring on the other side of the piston pin hole.

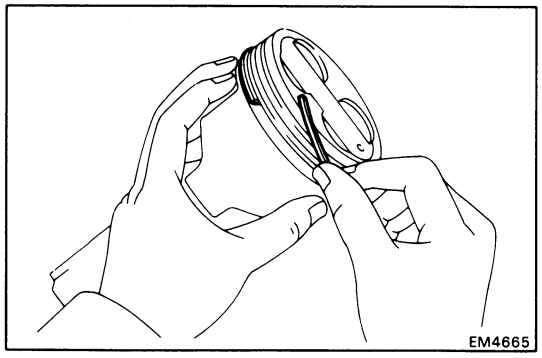

2. INSTALL PISTON RINGS

(a) Install the oil ring expander and two side rails by hand.

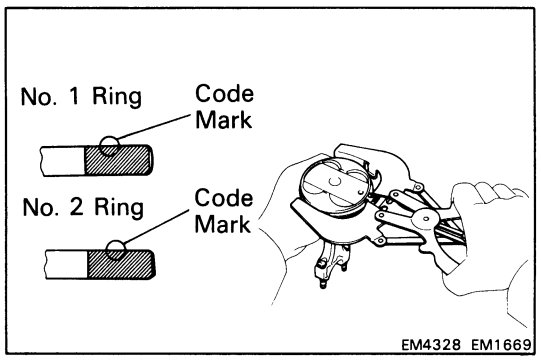

(b) Using a piston ring expander, install the two compression rings with the code mark facing upward.

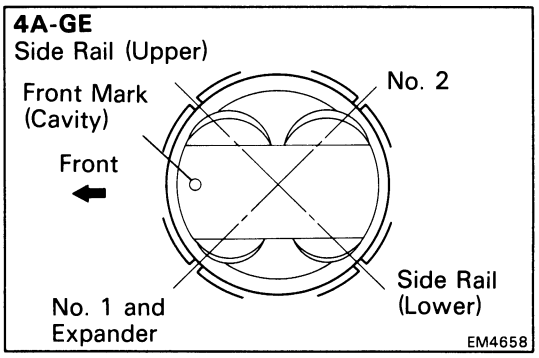

(c) Position the piston rings so that the ring ends are as shown.

CAUTION: Do not align the end gaps.

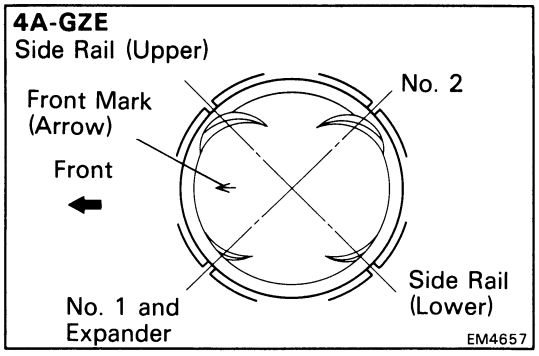

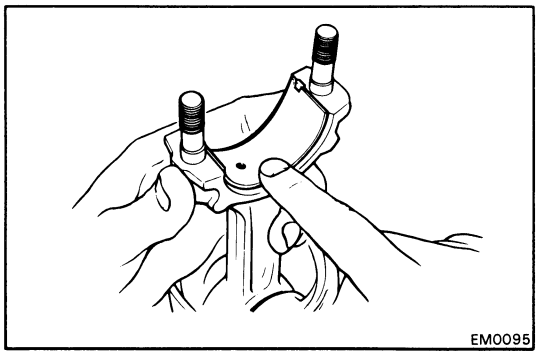

3. INSTALL BEARINGS

(a) Align the bearing claw with the claw groove of the connecting rod or connecting rod cap.

(b) Install the bearings in the connecting rod and rod cap.

(c) Lubricate the face of the bearings with clean engine oil.

NOTE: If replacing the bearings, replace with one having the same number as marked on the bearing cap.

CAUTION: Install the bearing with the oil hole in the connecting rod.

ASSEMBLY OF CYLINDER BLOCK

(See page EM-66)

NOTE:
- Thoroughly clean all parts to be assembled.
- Before installing the parts, apply new engine oil to all sliding and rotating surfaces.
- Replace all gaskets, O-rings and oil seals with new parts.

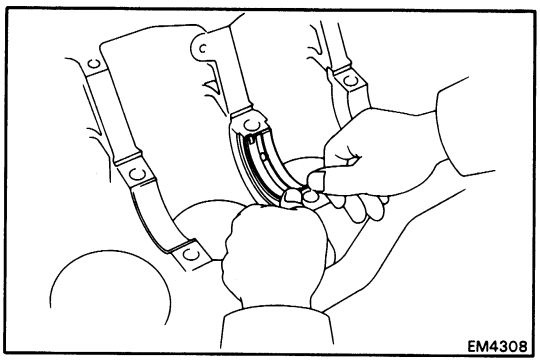
EM4308

1. INSTALL MAIN BEARINGS

(a) Align the bearing claw with the claw groove of the main bearing cap or cylinder block.

(b) Install the bearing in the cylinder block and bearing caps.

(c) Lubricate the faces of the bearings with clean engine oil.

CAUTION: Install the bearing with the oil hole in the block.

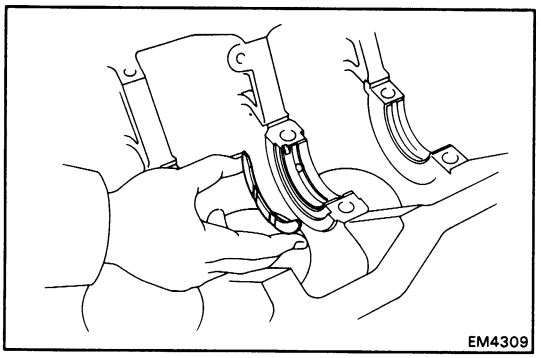
EM4309

2. INSTALL UPPER THRUST WASHERS

Install the thrust washers on the center main bearing with the oil grooves facing outward.

3. PLACE CRANKSHAFT ON CYLINDER BLOCK

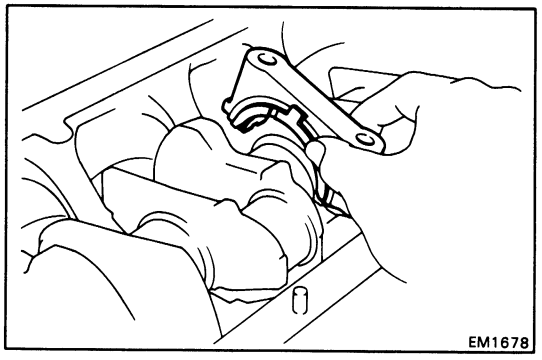
EM1678

4. INSTALL MAIN BEARING CAPS AND LOWER THRUST WASHERS

NOTE: Each bearing cap has a number and front mark.

(a) Install the thrust washers on the center bearing cap with the oil grooves facing outward.

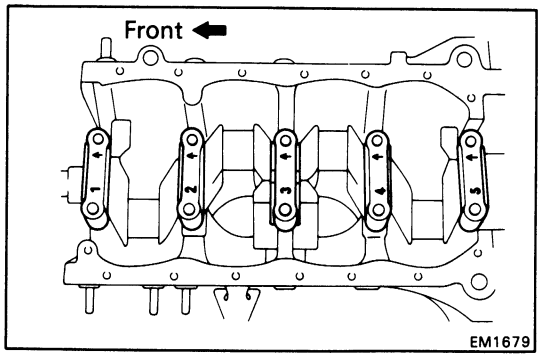

EM1679

(b) Install the bearing caps in numerical order with the arrows facing forward.

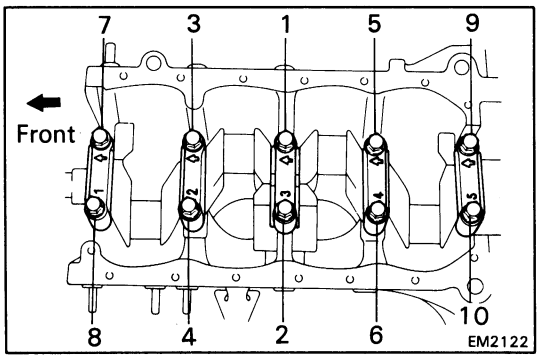

(c) Apply a light coat of engine oil on the threads and under the heads of the cap bolts.

(d) Install and uniformly tighten the ten cap bolts in several passes, in the sequence shown.

Torque: 610 kg-cm (44 ft-lb, 60 N·m)

(e) Check that the crankshaft turns smoothly.

(f) Check the crankshaft thrust clearance. (See page EM-82)

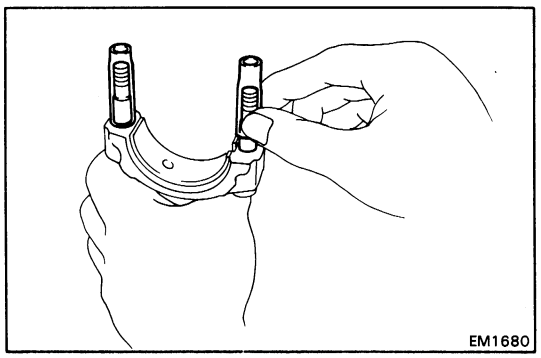

5. INSTALL PISTON AND CONNECTING ROD ASSEMBLES

(a) Lubricate the cylinder bores and crank pins with clean engine oil.

(b) Cover the connecting rod bolts with a short piece of hose to protect the crankshaft from damage.

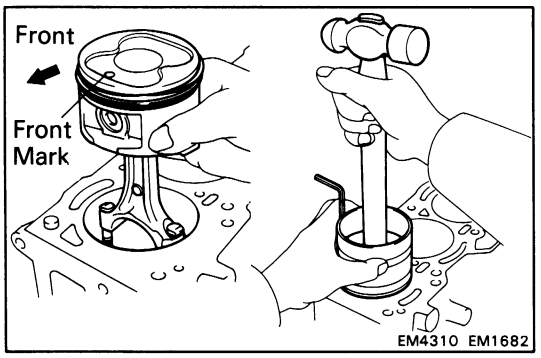

(c) Using a piston ring compressor, push the correctly numbered piston and connecting rod assembly into each cylinder with the front mark (cavity for 4A-GE and arrow for 4A-GZE) of the piston facing forward.

6. INSTALL CONNECTING ROD CAPS (12-sided nut type)

NOTE:
- The connecting rod cap nuts are tightened in two progressive steps.
- If any of the cap bolts break or deform, replace them.

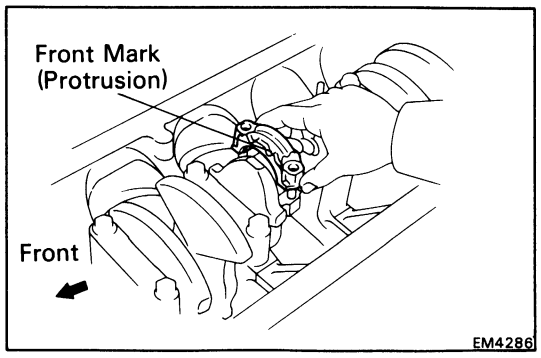

(a) Match the numbered cap with the numbered connecting rod.

(b) Install the cap with the front mark facing forward.

NOTE: Align the marks punched on the rod and cap.

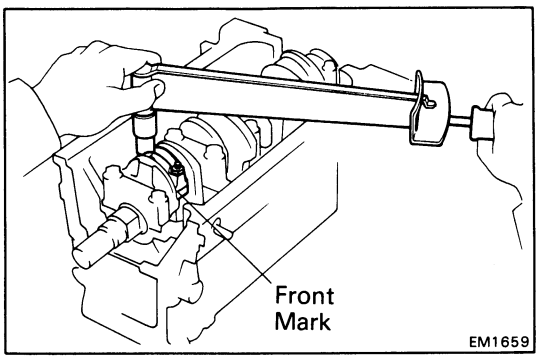

(c) Apply a light coat of the engine oil on the threads and under the nuts of the connecting rod cap.

(d) First, install and alternately tighten the cap nuts in several passes.

Toque: 400 kg-cm (29 ft-lb, 39 N·m)

If any one of the nuts does not meet the torque specification, replace the connecting rod bolt.

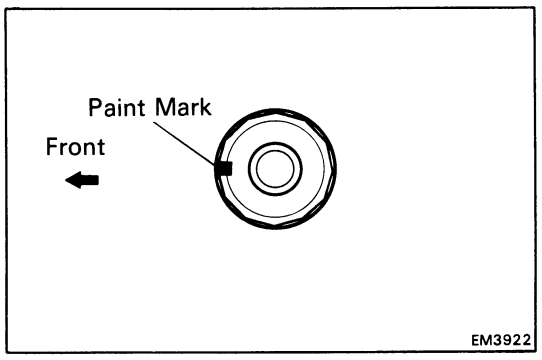

(e) Mark the front side of the top of cap nut with paint.

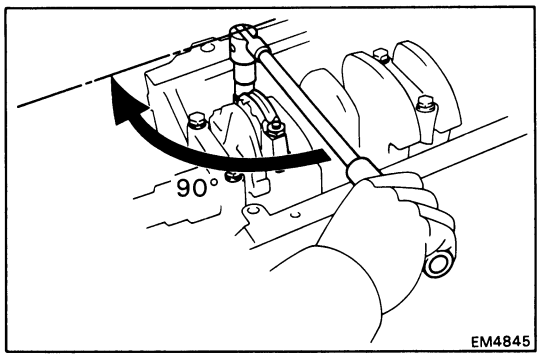

(f) Second, alternately retighten the cap nuts by an additional 90°.

(g) Check that the paint mark is turned by 90°.

Check that the crankshaft turns smoothly.

Check the connecting rod thrust clearance.
(See page EM-80)

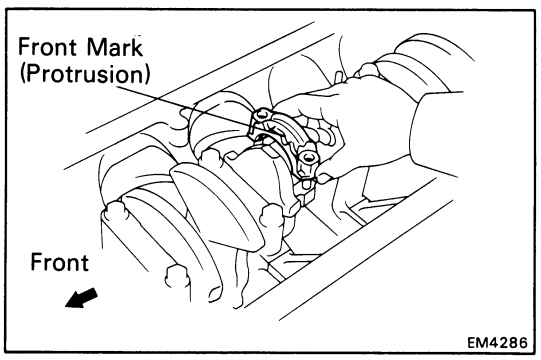

(Hexagon nut type)

(a) Match the numbered cap with the numbered connecting rod.

(b) Install the cap with the front mark facing forward.

NOTE: Align the marks punched on the rod and cap.

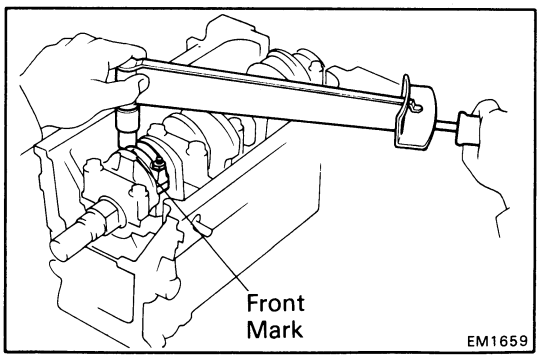

(c) Apply a light coat of the engine oil on the threads and under the nuts of the connecting rod cap.

(d) Install and alternately tighten the cap nuts in several passes.

Torque: 500 kg-cm (36 ft-lb, 49 N·m)

(e) Check that the crankshaft turns smoothly.

(f) Check the connecting rod thrust clearance.
(See page EM-80)

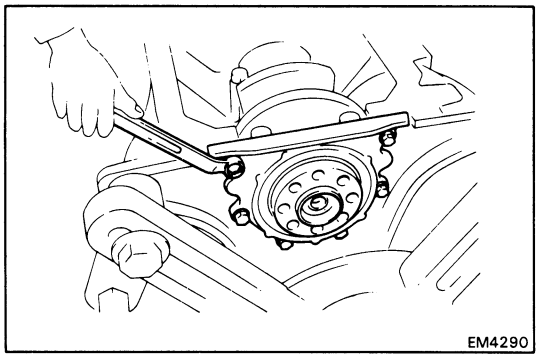

7. **INSTALL REAR OIL SEAL RETAINER**

   Install a new gasket and the rear oil seal retainer with the six bolts.

   Torque: 95 kg-cm (82 in.-lb, 9.3 N·m)

POST ASSEMBLY

1. **INSTALL OIL PUMP, BAFFLE PLATE, STRAINER AND OIL PUMP**
   (See steps 1 to 3 on pages LU-10, 11)

2. **INSTALL OIL FILTER BRACKETS**
   (See steps 3 to 6 on pages LU-16, 17)

3. **INSTALL WATER PUMP (See page CO-8)**

4. **INSTALL CYLINDER HEAD**
   4A-GE (See page EM-46)
   4A-GZE (See page EM-61)

5. **INSTALL TIMING BELT (See page EM-21)**

6. **INSTALL DISTRIBUTOR (See page IG-10)**

7. **(4A-GE)**
   INSTALL ALTERNATOR BRACKET

8. **(4A-GZE)**
   INSTALL ALTERNATOR AND BRACKET

9. **(w/ A/C)**
   INSTALL A/C COMPURESSOR BRACKET

10. **REMOVE ENGINE FROM ENGINE STAND**

11. **INSTALL REAR END PLATE**

12. **(M/T)**
    INSTALL FLYWHEEL

    (a) Install the flywheel on the crankshaft.

    (b) Install and uniformly tighten the mount bolts in several passes, in the sequence shown.

    Torque: 750 kg-cm (54 ft-lb, 74 N·m)

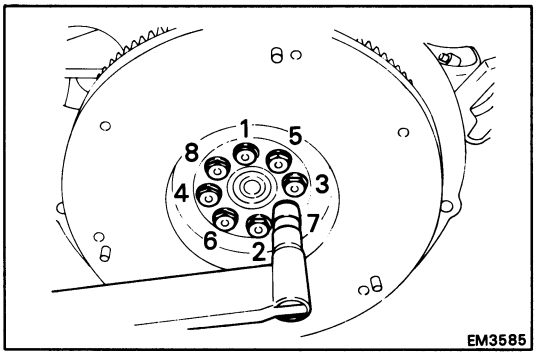

13. **(A/T)**
    INSTALL DRIVE PLATE
    (See procedure step 12)

    Torque: 850 kg-cm (61 ft-lb, 83 N·m)

14. **(M/T)**
    INSTALL CLUTCH DISC AND COVER (See page CL-14)

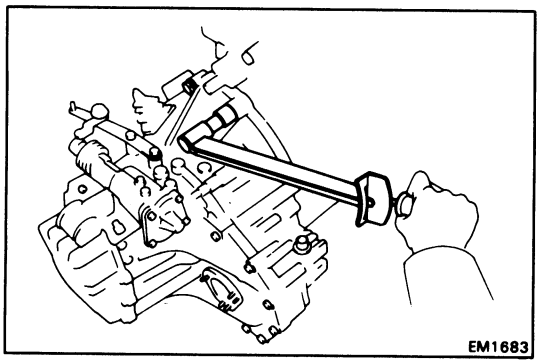

INSTALLATION OF ENGINE (4A-GE)

1. **INSTALL TRANSAXLE TO ENGINE**
   (See page MT-96) (M/T vehicle)
   (See page AT-144) (A/T vehicle)

2. **INSTALL STARTER (See page ST-12)**

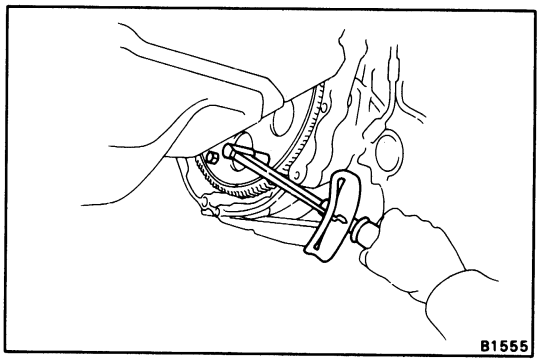

3. **(A/T vehicle)**
   INSTALL SIX TORQUE CONVERTER MOUNTING BOLT
   (a) First, install the gray bolt and then five black bolts.
   (b) Tighten the bolts evenly.
   Torque: 280 kg-cm (20 ft-lb, 27 N·m)

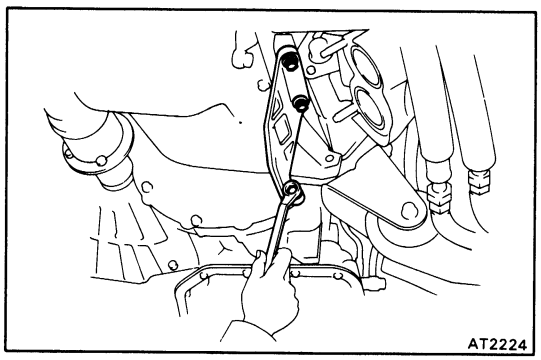

4. **INSTALL FLYWHEEL HOUSING UNDER COVER**
   (a) Install the under cover with the three bolts (M/T) or two bolts (A/T).
   (b) (A/T vehicle)
   Install the stiffener plate with the three bolts. Tighten the bolts.
   Torque: 380 kg-cm (27 ft-lb, 37 N·m)

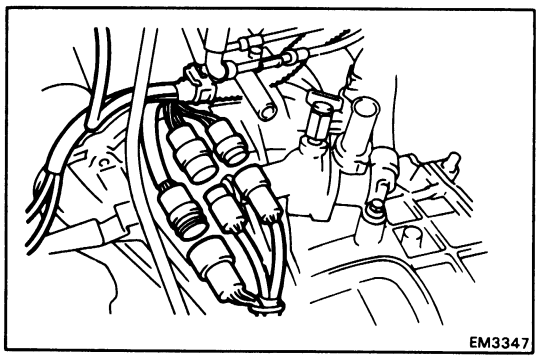

5. **(w/ A/C)**
   CONNECT FOLLOWING CONNECTORS:
   - Transmission solenoid connector
   - Neutral start switch connector
   - Back-up and neutral start switch connector

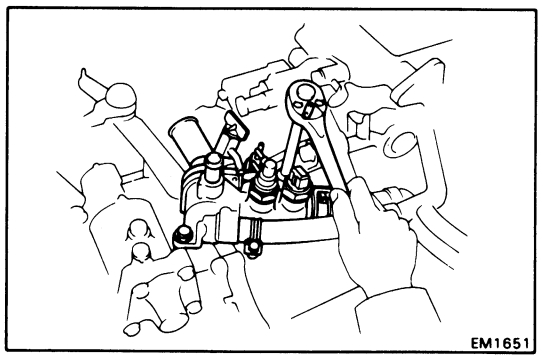

6. **INSTALL WATER INLET WITH HOUSING**
   (a) Connect the two hoses to the No. 1 and No. 2 water by-pass pipes.
   (b) Install the water inlet and housing with the nut.
   (c) Connect the vacuum hoses to BVSVS.
   (d) Connect the start injector time switch connector.

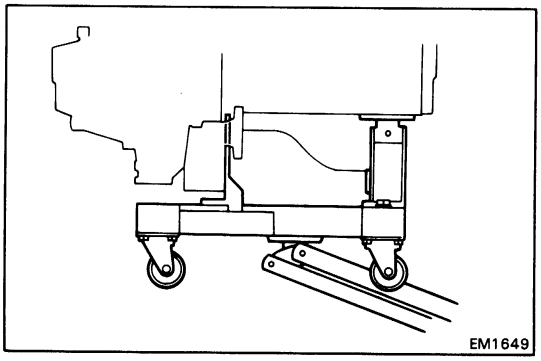

7. INSTALL ENGINE WITH TRANSAXLE

(a) Set the engine with transaxle in the engine saddle as shown.

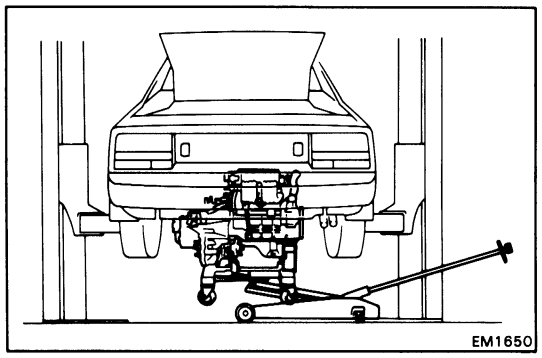

(b) Slowly lower the vehicle.

CAUTION: Be careful not to damage the throttle position sensor.

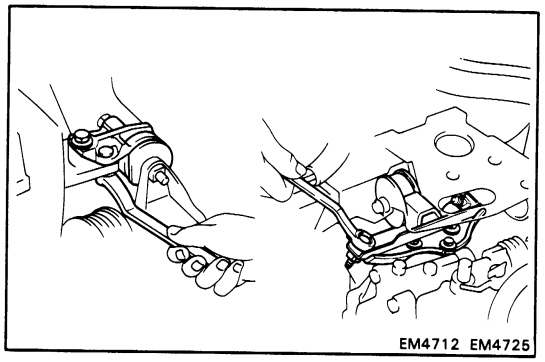

(c) Install the RH mounting insulator with the two bolts and nuts.

(d) Install the LH mounting insulator with the two (M/T) or three (A/T) bolts.

8. RAISE VEHICLE

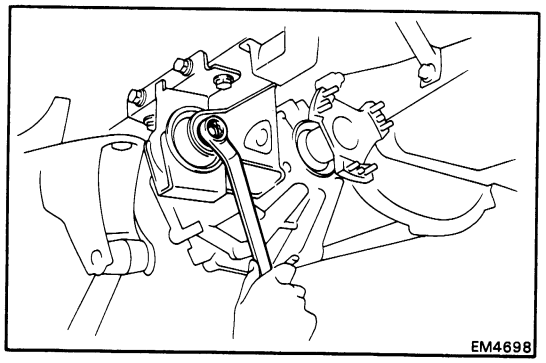

9. INSTALL REAR MOUNTING INSULATOR

(a) Install the mounting to the body with the four bolts.

(b) Connect the mounting to the bracket with through bolt.

Torque:

10 mm bolt head	**530 kg-cm (38 ft-lb, 52 N·m)**
12 mm bolt head	**800 kg-cm (58 ft-lb, 78 N·m)**

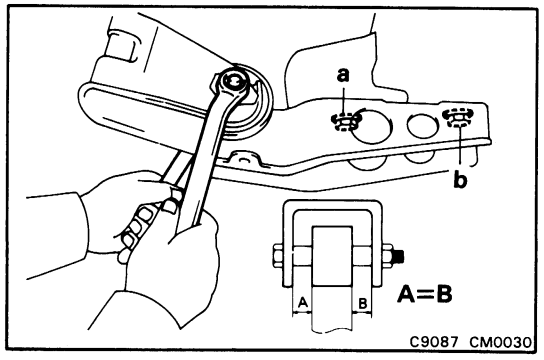

10. INSTALL FRONT MOUNTING INSULATOR

(a) Install the mounting insulator to the body with the two bolts.

Torque: a 530 kg-cm (38 ft-lb, 52 N·m)
b 740 kg-cm (54 ft-lb, 73 N·m)

(b) Connect the mounting bracket to the insulator, temporarily install the through bolt.

(c) By bouncing the engine, confirm the mounting insulator is mounted on the middle of the insulator mount bracket.

Torque: 800 kg-cm (58 ft-lb, 78 N·m)

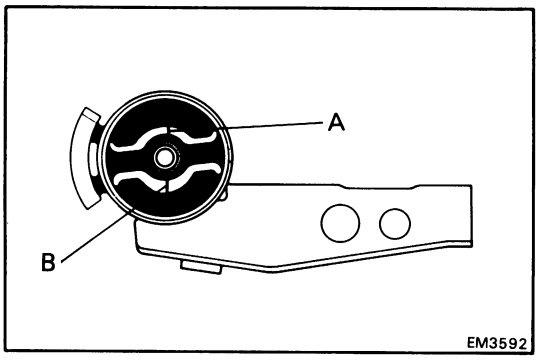

[Reference]
Make sure clearance A and B.

Clearance: A = 3 mm (0.118 in.)
B = 5 mm (0.179 in.)

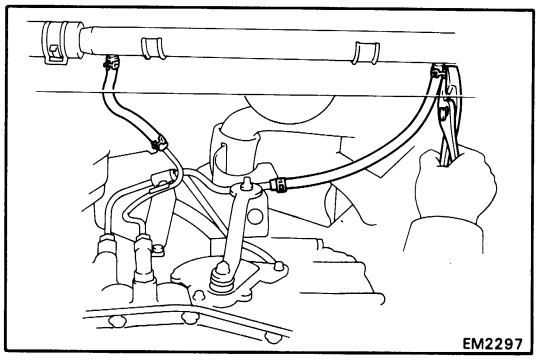

11. INSTALL REAR DRIVE SHAFTS
(See page RA-32)

12. INSTALL FRONT EXHAUST PIPE
(See page LU-12)

13. (A/T vehicle)
CONNECT A/T OIL COOLER HOSES

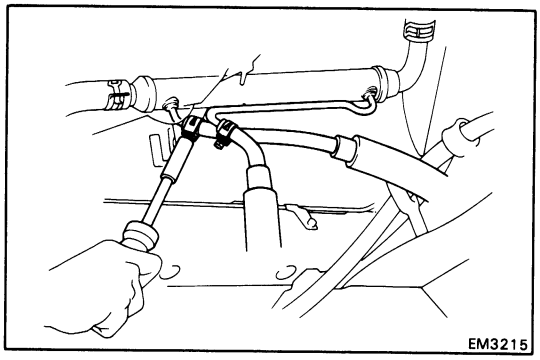

14. (w/ Oil cooler)
CONNECT ENGINE OIL COOLER HOSES

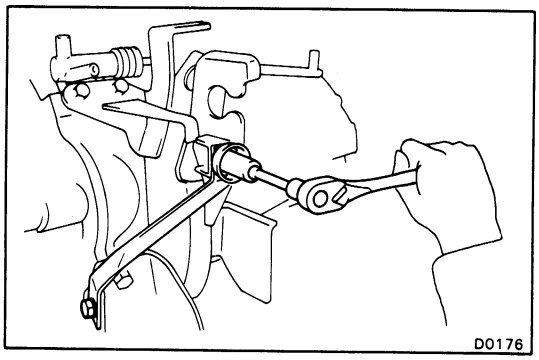

15. (M/T vehicle)
INSTALL CLUTCH RELEASE CYLINDER AND CONTROL BRACKET

(a) Install the control bracket and clutch release cylinder with the three bolts.

(b) Install the No. 2 control cable bracket with the two bolts.

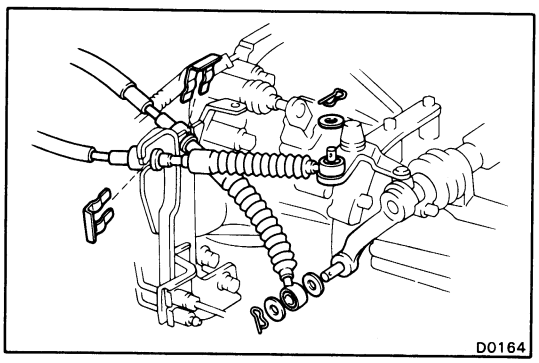

16. CONNECT CONTROL CABLES
(M/T vehicle)

(a) Connect the control cables to the shift outer lever and select lever.

(b) Install the retainers, washers and clips.

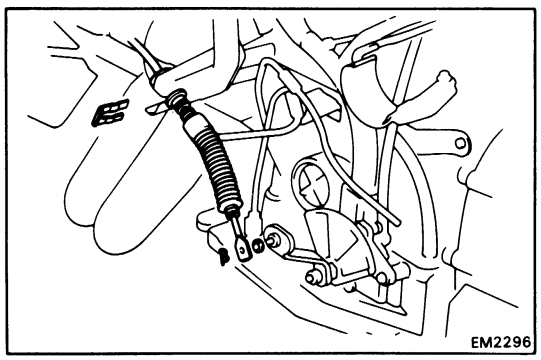

(A/T vehicle)

(a) Connect the control cable to the shift lever.

(b) Install the retainer and clip.

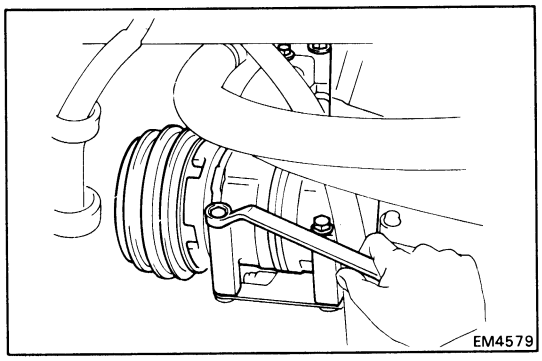

17. (w/ A/C)
CONNECT A/C COMPRESSOR

Install the A/C compressor with the four bolts.

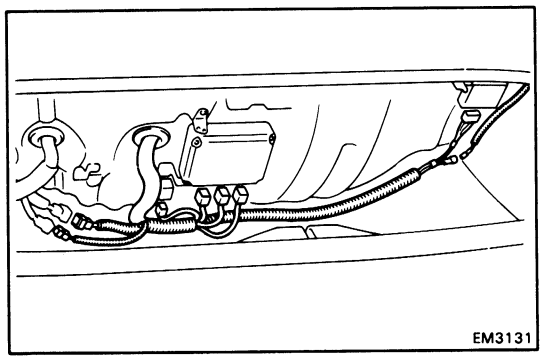

18. INSTALL ENGINE WIRE HARNESS IN REAR LUGGAGE COMPARTMENT

(a) Insert the engine wire harness in the rear luggage compartment.

(b) Connect following connectors:
- Engine wire and engine main wire connectors.
- Cooling fan computer connector
- ECU connector
- Circuit opening relay connector

(c) Install the rear luggage compartment trim with the five clips.

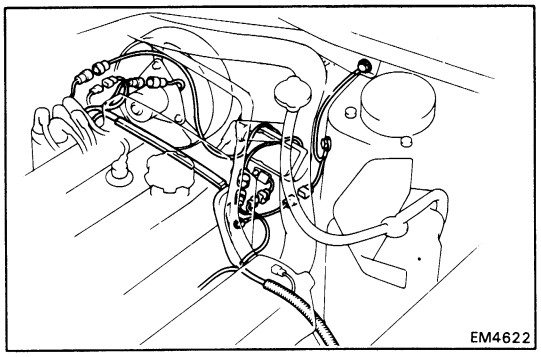

19. CONNECT HIGH-TENSION CORD TO IGNITION COIL

20. CONNECT FOLLOWING WIRES:
- (w/ A/C)
  Compressor connector
- Ground strap connector (between cylinder head and body)
- Engine compartment cooling fan motor connector
- Noise filter connector
- Two igniter connectors

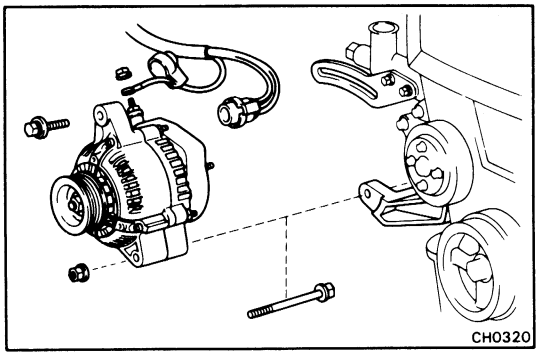

21. CONNECT BRAKE BOOSTER HOSE

22. CONNECT NO. 1 RADIATOR HOSE TO WATER OUTLET HOUSING

23. INSTALL ALTERNATOR (See page CH-15)

24. INSTALL AIR CONDITIONER DRIVE BELT

Drive belt tension:

A/C	**New belt**	**160 ± 20 lb**
	Used belt	**105 ± 10 lb**

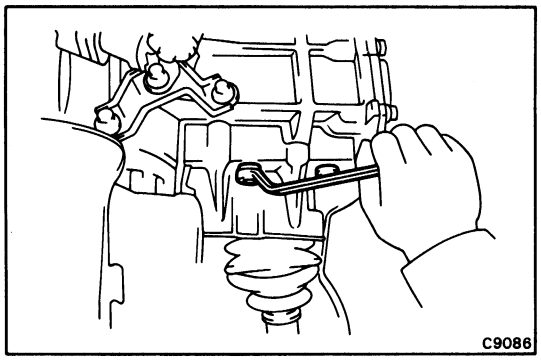

25. INSTALL RADIATOR RESERVOIR TANK

26. INSTALL GROUND STRAP TO WATER INLET HOUSING

27. (M/T vehicle)
INSTALL TRANSAXLE PROTECTOR

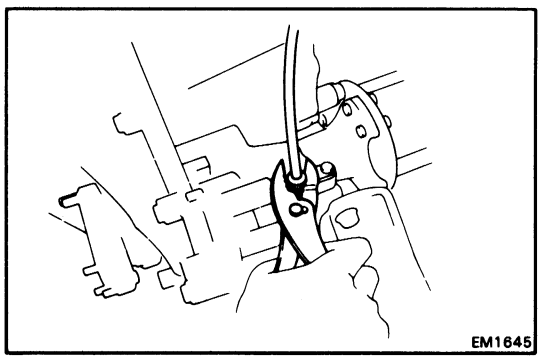

28. CONNECT SPEEDOMETER CABLE

29. CONNECT FOLLOWING CONNECTORS:
- Engine wire and engine main wire connector
- Back-up light switch connector (M/T only)

30. CONNECT VACUUM HOSE TO CHARCOAL CANISTER

31. CONNECT FUEL RETURN HOSE

32. CONNECT FUEL HOSE TO FILTER
Torque: 300 kg-cm (22 ft-lb, 29 N·m)

33. CONNECT AIR BLEEDER HOSE TO WATER INLET HOUSING

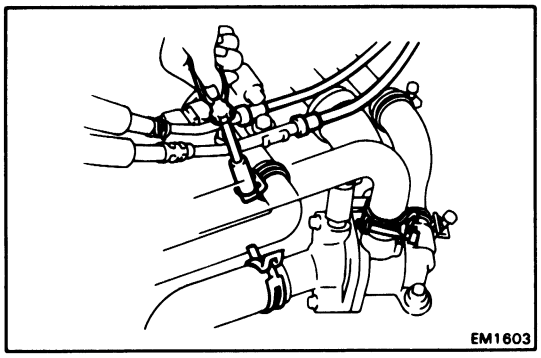

34. CONNECT HEATER HOSES AND NO. 6 RADIATOR HOSE
(a) Connect the No. 6 radiator hose to the water inlet housing.
(b) Connect the heater hoses to the cylinder head rear plate and water inlet housing.

35. INSTALL AIR FLOW METER WITH NO. 1 AIR HOSE

36. INSTALL BATTERY

37. CONNECT CRUISE CONTROL VACUUM HOSE

38. CONNECT FOLLOWING CABLES:
- Accelerator cable
- (w/ Cruise control)
  Cruise control cable
- (A/T vehicle)
  A/T throttle cable
  (See page AT-6)

39. REFILL WITH COOLANT (See page CO-4)

Capacity:
12.4 liters (13.1 US qts, 10.9 Imp. qts)

40. REFILL WITH ENGINE OIL (See page LU-4)

Oil capacity (w/o Oil cooler):
Drain and refill
w/o Oil filter change
3.0 liters (3.2 US qts, 2.6 Imp. qts)
w/ Oil filter change
3.3 liters (3.5 US qts, 2.9 Imp. qts)
Dry fill
3.7 liters (3.9 US qts, 3.3 Imp. qts)

Oil capacity (w/ Oil cooler):
Drain and refill
w/o Oil filter change
3.1 liters (3.3 US qts, 2.7 Imp. qts)
w/ Oil filter change
3.4 liters (3.6 US qts, 3.0 Imp. qts)
Dry fill
3.8 liters (4.0 US qts, 3.3 Imp. qts)

41. CONNECT CABLE TO NEGATIVE TERMINAL OF BATTERY

42. START ENGINE AND CHECK FOR LEAKS

43. PERFORM ENGINE ADJUSTMENT

Adjust the ignition timing.
(See steps 5 to 8 on pages IG-11, 12)

44. INSTALL ENGINE UNDER COVER AND FUEL TANK PROTECTORS

45. PERFORM ROAD TEST

Check for abnormal noise, shock, slippage, correct shift points and smooth operation.

46. RECHECK ENGINE COOLANT AND ENGINE OIL LEVELS

INSTALLATION OF ENGINE (4A-GZE)

1. **INSTALL TRANSAXLE TO ENGINE**
   M/T vehicle (See page MT-96)
   A/T vehicle (See page AT-144)

2. **INSTALL STARTER (See page ST-12)**

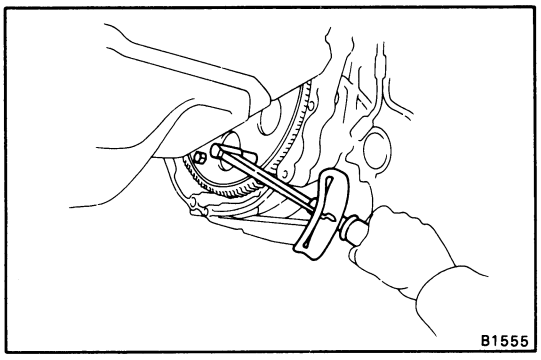

3. **(A/T vehicle)**
   INSTALL SIX TORQUE CONVERTER MOUNTING BOLT
   (a) First, install the gray bolt and then five black bolts.
   (b) Tighten the bolts evenly.
   Torque: 280 kg-cm (20 ft-lb, 27 N·m)

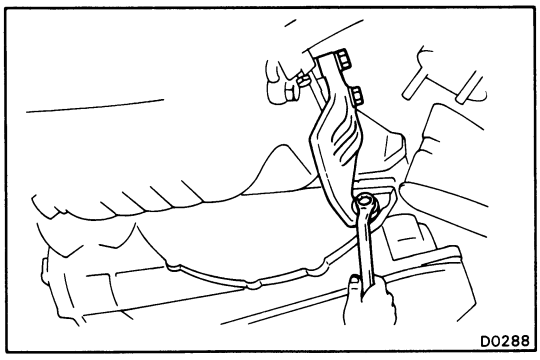

4. **INSTALL FLYWHEEL HOUSING UNDER COVER**
   (a) Install the under cover with the three bolts (M/T) or two bolts (A/T).
   (b) (A/T vehicle)
   Install the stiffener plate with the three bolts. Tighten the bolts.
   Torque: 380 kg-cm (27 ft-lb, 37 N·m)

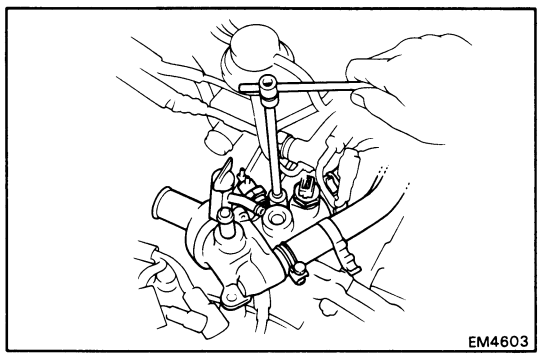

5. **INSTALL WATER INLET WITH HOUSING**
   (a) Connect the two hoses to the No. 1 and No. 2 water by-pass pipes.
   (b) Install the water inlet and housing with the nut.
   (c) Connect the vacuum hoses to BVSV.

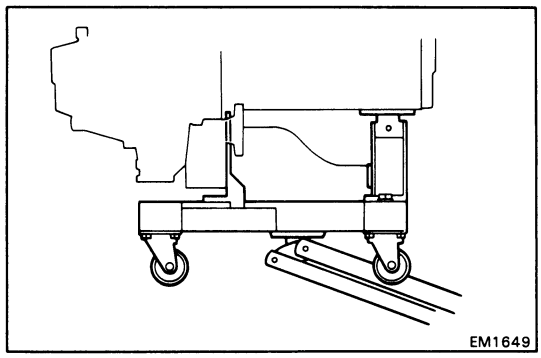

6. **INSTALL ENGINE WITH TRANSAXLE**
   (a) Set the engine with transaxle in the engine saddle as shown.

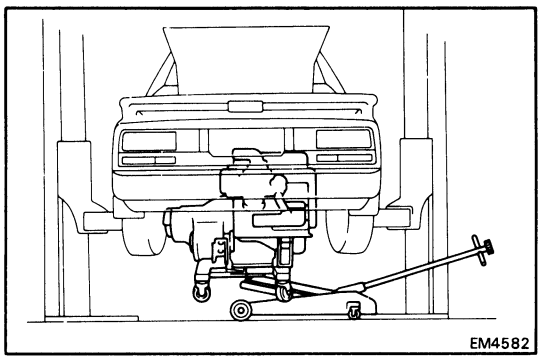

(b) Slowly lower the vehicle.

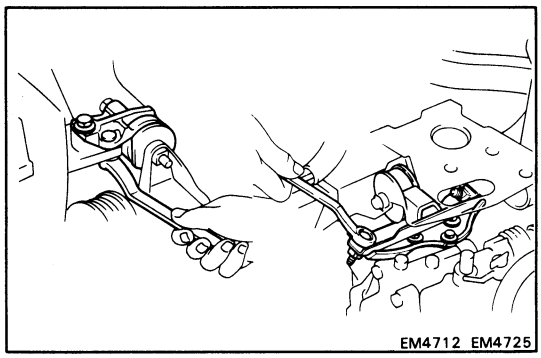

(c) Install the RH mounting insulator with the two bolts and nuts.

(d) Install the LH mounting insulator with the two (M/T) or three (A/T) bolts.

7. RAISE VEHICLE

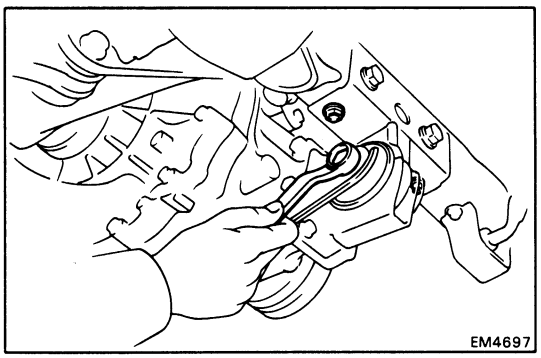

8. INSTALL REAR MOUNTING INSULATOR

(a) Install the mounting insulator to the body with the four bolts.

(b) Connect the mounting insulator to the bracket with the through bolt.

Torque:

10 mm bolt head	**530 kg-cm (38 ft-lb, 52 N·m)**
12 mm bolt head	**800 kg-cm (58 ft-lb, 78 N·m)**

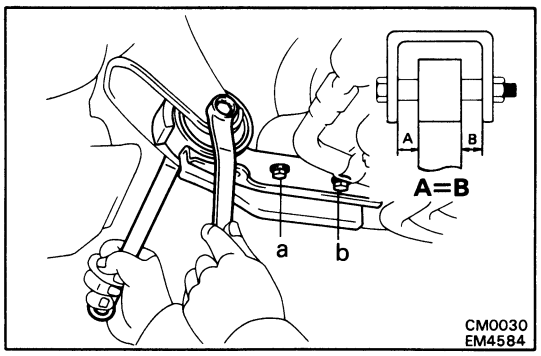

9. INSTALL FRONT MOUNTING INSULATOR

(a) Install the mounting insulator to the body with the two bolts.

Torque: a 530 kg-cm (38 ft-lb, 52 N·m)
b 740 kg-cm (54 ft-lb, 73 N·m)

(b) Connect the mounting bracket to the insulator, temporarily install the through bolt.

(c) By bouncing the engine, confirm the mounting insulator is mounted on the middle of the insulator mount bracket.

Torque: 800 kg-cm (58 ft-lb, 78 N·m)

(Reference)

Make sure clearance A and B.

Clearance: A = 3 mm (0.118 in.)
B = 5 mm (0.197 in.)

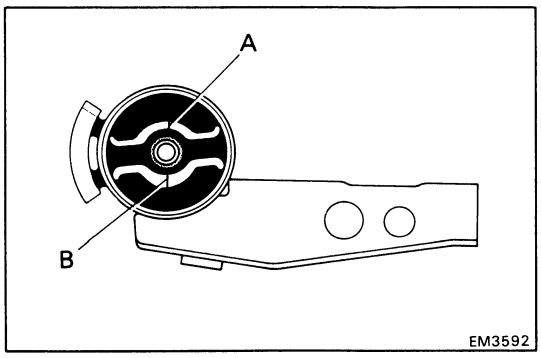

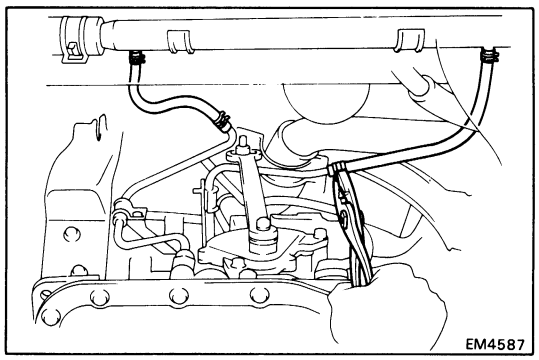

10. INSTALL REAR DRIVE SHAFTS
(See page RA-32)

11. INSTALL FRONT EXHAUST PIPE
(See page LU-12)

12. (A/T vehicle)
CONNECT A/C OIL COOLER HOSES

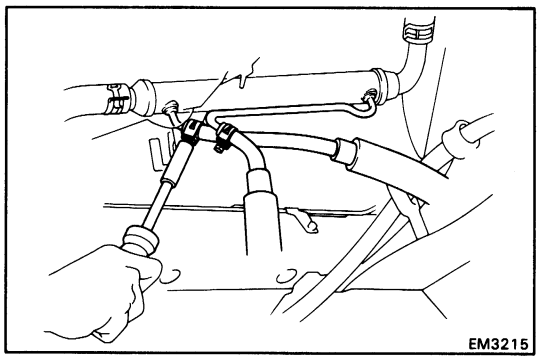

13. CONNECT ENGINE OIL COOLER HOSES

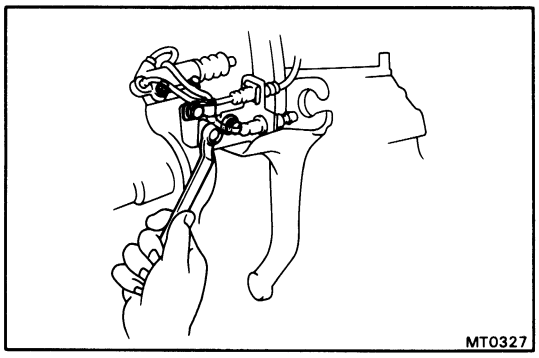

14. (M/T vehicle)
INSTALL CLUTCH RELEASE CYLINDER AND CONTROL BRACKET

(a) Install the control bracket and clutch release cylinder with the six bolts.

(b) Connect the heater hose clamp with the bolt.

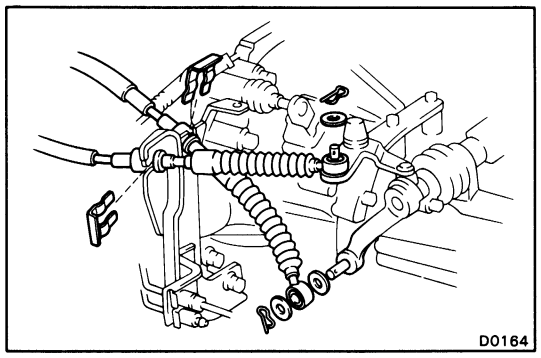

15. CONNECT CONTROL CABLE
(M/T vehicle)

(a) Connect the control cables to the shift outer lever and select level.

(b) Install the retainers, washers and clips.

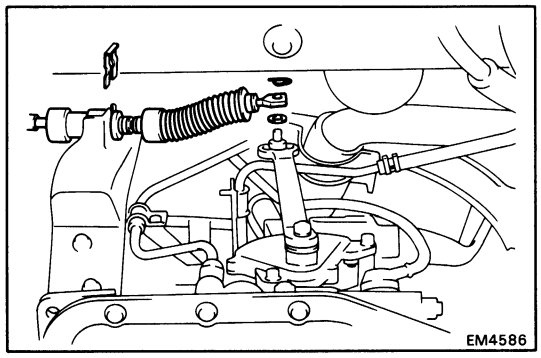

(A/T vehicle)

(a) Connect the control cable to the shift lever.

(b) Install the retainer and clip.

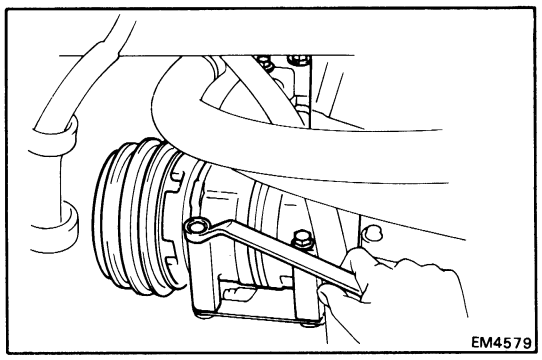

16. (w/ A/C)
CONNECT A/C COMPRESSOR

Install the A/C compressor with the four bolts

17. INSTALL A/C DRIVE BELT

Drive belt tension:

New belt	**165 ± 10 lb**
Used belt	**85 ± 15 lb**

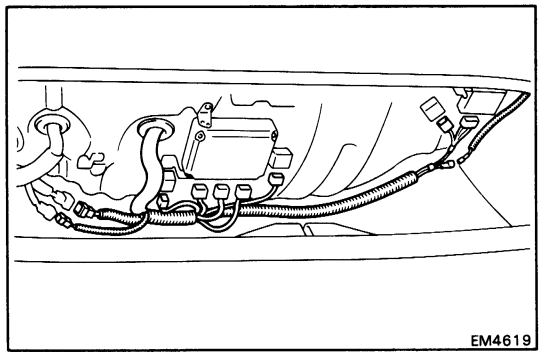

18. INSTALL ENGINE WIRE HARNESS IN REAR LUGGAGE COMPARTMENT

(a) Insert the engine wire harness in the rear luggage compartment.

(b) Disconnect the following connectors:
- Circuit opening relay connector
- ECU connectors
- Cooling fan computer connector
- Supercharger relay connector
- IC regulator connector
- Engine wire and engine main wire connectors

(c) Install the rear luggage compartment trim with the five clips.

19. CONNECT FOLLOWING CONNECTORS AND WIRES:

(a) (A/T vehicle)
Two neutral start switch connectors

(b) (A/T vehicle)
Solenoid connector

(c) (A/T vehicle)
Speed sensor connector

(d) Cold start injector time switch connector

(e) (M/T vehicle)
Back-up light switch connector

(f) Ground strap from water inlet housing

(g) Two engine wire connectors

(h) Check connector

(i) High-tension cord from ignition coil

(j) Igniter connector

(k) Noise filter connector

(l) Engine compertment cooling fan connector

(m) Ground strap connector (between cylinder head and body)

(n) (w/ A/C)
Two A/C compressor connectors

(o) Solenoid resistor connector

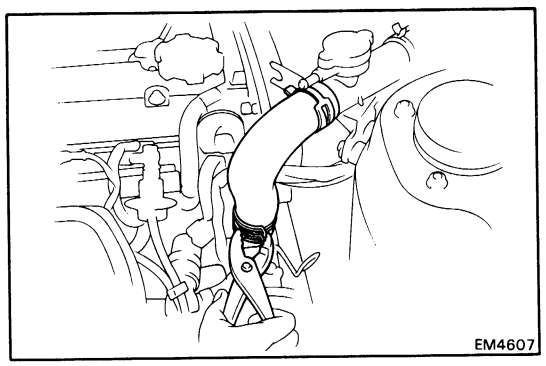

20. CONNECT NO. 1 RADIATOR HOSE TO WATER OUTLET HOUSING

21. INSTALL RADIATOR RESERVOIR TANK

22. CONNECT BRAKE BOOSTER VACUUM HOSE

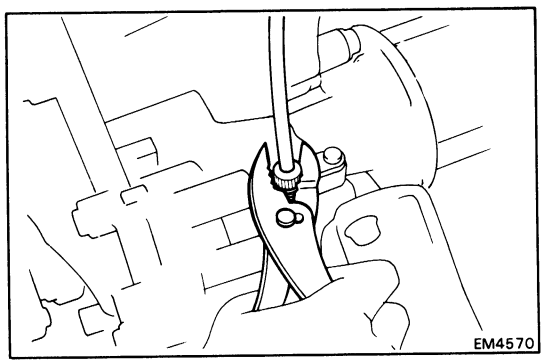

23. CONNECT SPEEDOMETER CABLE

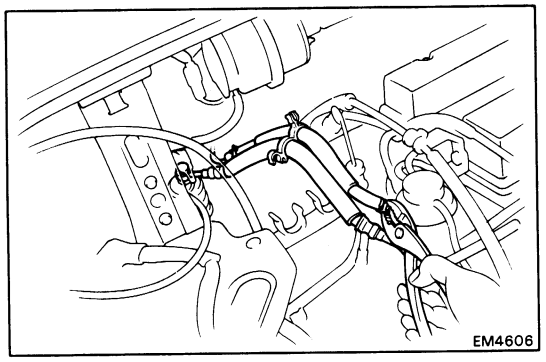

24. CONNECT FUEL INLET AND RETURN HOSES

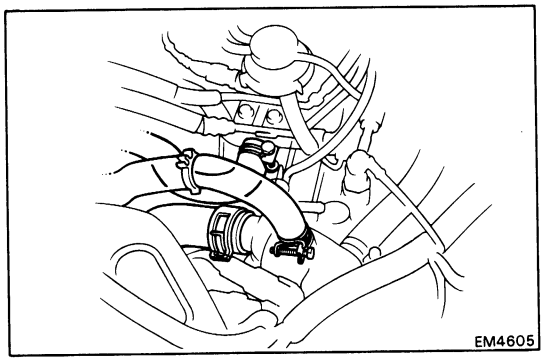

25. CONNECT HEATER HOSES AND NO. 6 RADIATOR HOSE

(a) Connect the No. 6 radiator hose to the water inlet housing.

(b) Connect the heater hoses to the cylinder head rear cover.

26. (w/ Cruise control)
CONNECT CRUISE CONTROL CABLE

27. CONNECT ACCELERATOR CABLE

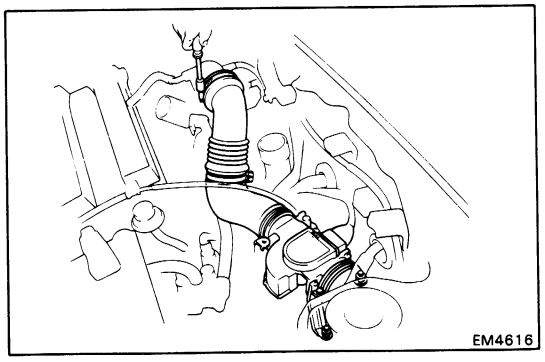

28. INSTALL AIR FLOW METER WITH NO. 3 AIR CLEANER HOSE

(a) Install the air flow meter with No. 3 air cleaner hose with the three bolts and two clamps.

(b) Install the EGR VSV with the bolt.

(c) Connect the air flow meter and EGR VSV connectors.

29. (A/T vehicle)
CONNECT A/T THROTTLE CABLE

30. CONNECT FOLLOWING HOSES:

(a) (w/ A/C)
A/C idle up vacuum hoses

(b) Charcoal canister vacuum hose

(c) (w/ Cruise control)
Cruise control vacuum hose

(d) Air bleeder hose from water inlet housing

31. INSTALL BATTERY

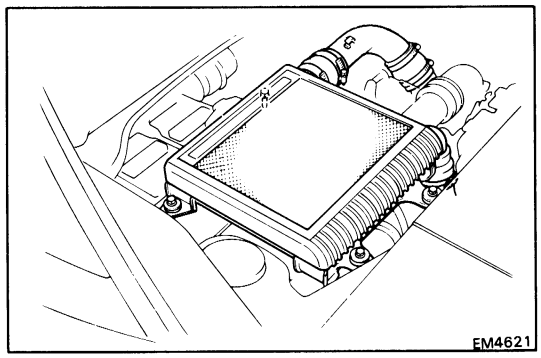

32. INSTALL INTERCOOLER

Install the intercooler with the four bolts and two clamps.

33. REFILL WITH COOLANT (See page CO-4)

Capacity:
12.4 liters (13.1 US qts, 10.9 Imp. qts)

34. REFILL WITH ENGINE OIL (See page LU-4)

Oil capacity (w/o Oil cooler):
Drain and refill
w/o Oil filter change
3.0 liters (3.2 US qts, 2.6 Imp. qts)
w/ Oil filter change
3.3 liters (3.5 US qts, 2.9 Imp. qts)
Dry fill 3.7 liters (3.9 US qts, 3.3 Imp. qts)
Oil capacity (w/ Oil cooler):
Drain and refill
w/o Oil filter change
3.1 liters (3.3 US qts, 2.7 Imp. qts)
w/ Oil filter change
3.4 liters (3.6 US qts, 3.0 Imp. qts)
Dry fill 3.8 liters (4.0 US qts, 3.3 Imp. qts)

35. CONNECT CABLE TO NEGATIVE TERMINAL OF BATTERY

36. START ENGINE AND CHECK FOR LEAKS

37. PERFORM ENGINE ADJUSTMENT

Adjust the ignition timing.
(See steps 5 to 8 on pages IG-11, 12)

38. INSTALL ENGINE UNDER COVER AND FUEL TANK PROTECTORS

39. PERFORM ROAD TEST

Check for abnormal noise, shock, slippage, correct shift points and smooth operation.

40. RECHECK ENGINE COOLANT AND ENGINE OIL LEVELS

SUPERCHARGER SYSTEM

	Page
TROUBLESHOOTING	SC-2
SUPERCHARGER	SC-3
SUPERCHARGER RELAY	SC-19

SC

TROUBLESHOOTING

Problem	Possible cause	Remedy	Page
No supercharger pressure	Compressor does not rotate properly		
	(a) Drive belt loose or broken	Adjust or replace drive belt	MA-4
	(b) Compressor faulty	Repair compressor	SC-9
	Magnetic clutch does not engage		
	(a) Fuses blown	Check "EFI" or "IGN" fuse	
	(b) Supercharger relay faulty	Check supercharger relay	SC-19
	(c) Magnetic clutch faulty	Check magnetic clutch	SC-3
	(d) EFI ECU faulty	Check EFI ECU	
	(e) Wiring faulty	Check wiring	
Supercharger pressure too low	Drive belt slipping	Check or replace drive belt	MA-4
	Magnetic clutch faulty	Check magnetic clutch	SC-3
	Compressor faulty	Check compressor	SC-9
	ABV VSV faulty	Check ABV VSV	SC-12
	ABV faulty	Check ABV	SC-12
	EFI ECU faulty	Check EFI ECU	
Supercharger pressure too high	ABV VSV faulty	Check ABV VSV	SC-12
	ABV faulty	Check ABV	SC-12
	EFI ECU faulty	Check EFI ECU	

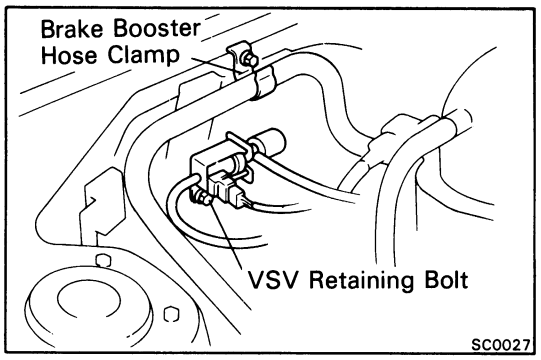

SUPERCHARGER

ON-VEHICLE INSPECTION OF SUPERCHARGER

1. CHECK SUPERCHARGER OIL LEVEL

NOTE: With the engine cold, check the oil level on the dipstick.

(a) Park the vehicle on a level spot and turn the engine off.

(b) Remove the brake booster hose clamp.

(c) Remove the VSV retaining bolt.

CAUTION: Do not disconnect the hoses from the VSV.

(d) Turn the yellow-headed supercharger oil level dipstick counterclockwise and pull it out.

(e) Wipe the dipstick clean with a rag.

(f) Reinsert the dipstick. Turn it fully clockwise or the reading will not be correct.

(g) Remove the dipstick again and look at the oil level on the end.

(h) The oil level should be between the "L" and "F" marks on the dipstick.

If low, check for leakage and add oil up to the "F" mark as follows.

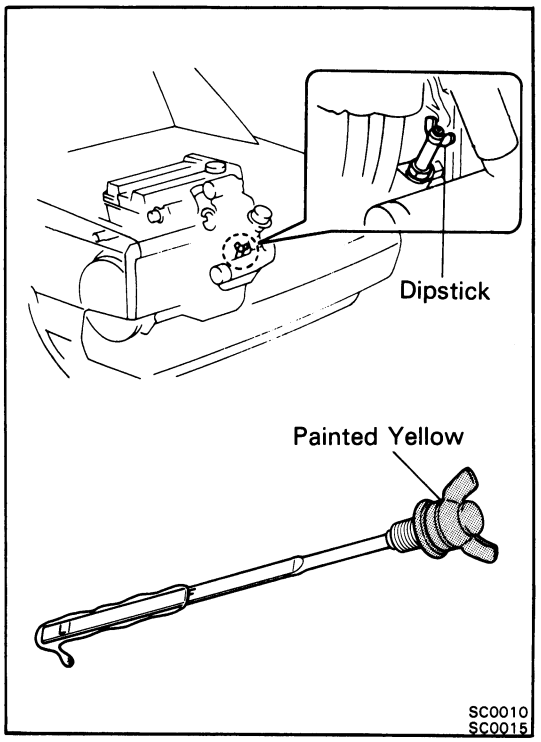

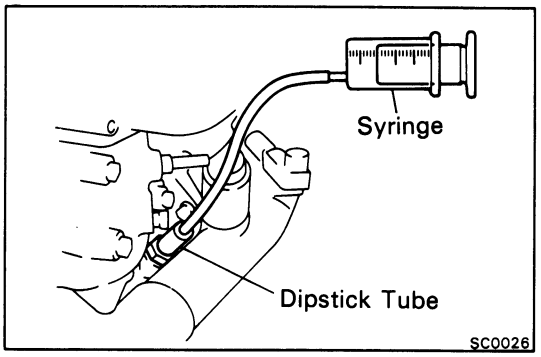

(i) Add supercharger oil though the dipstick tube using a vinyl tube and syringe.

Supercharger oil: Part No. 08885-80108 or equivalent

(j) Recheck the oil level.

NOTE: Avoid overfilling and low level, or the supercharger could be damaged.

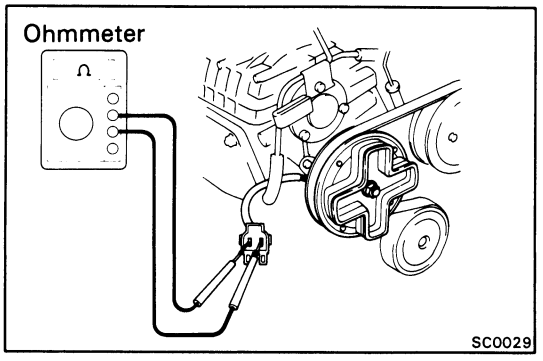

2. INSPECT MAGNET CLUTCH

(a) Check that the magnet clutch goes ON when the throttle valve is suddenly opened during engine idling.

(b) Using an ohmmeter, measure the resistance of the stator coil between the clutch lead wire terminals.

Standard resistance: 3.7 ± 0.2 Ω at 20°C (68°F)

If the resistance is not as specified, replace the clutch stator.

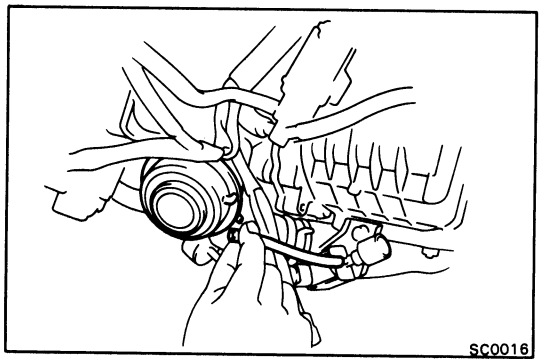

3. INSPECT AIR BY-PASS VALVE (ABV)

While the engine running, disconnect the ABV vacuum hose and check that there is normal operating noise in ABV.

4. (A/T vehicle)
INSPECT STALL TEST
(See page AT-8)

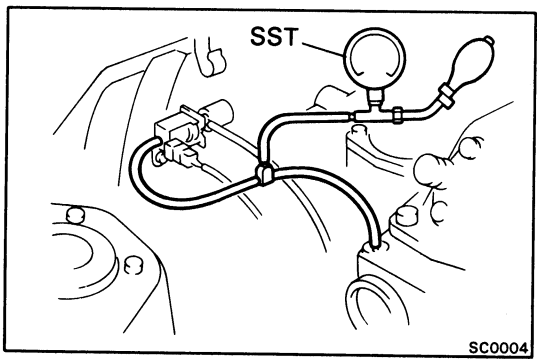

5. INSPECT SUPERCHARGER PRESSURE

(a) Install SST (turbocharger pressure gauge) between the VSV and intake manifold with a three way.

SST 09992-00241

(b) (M/T vehicle)
While driving with the engine running at 1,500 rpm on the fourth gear, fully open the throttle vale and check the supercharger pressure with the engine rpm at 2,000 rpm.

Standard pressure: 0.25 kg/cm^2 (3.6 psi, 25 kPa)

(c) (A/T vehicle)
Check the supercharger pressure with a stall test.

Standard pressure: 0.30 kg/cm^2 (4.3 psi, 29 kPa)

If the pressure is less than that specified, inspect the supercharger assembly.

If the pressure is above specification, inspect the ABV system.

REMOVAL OF SUPERCHARGER

Components

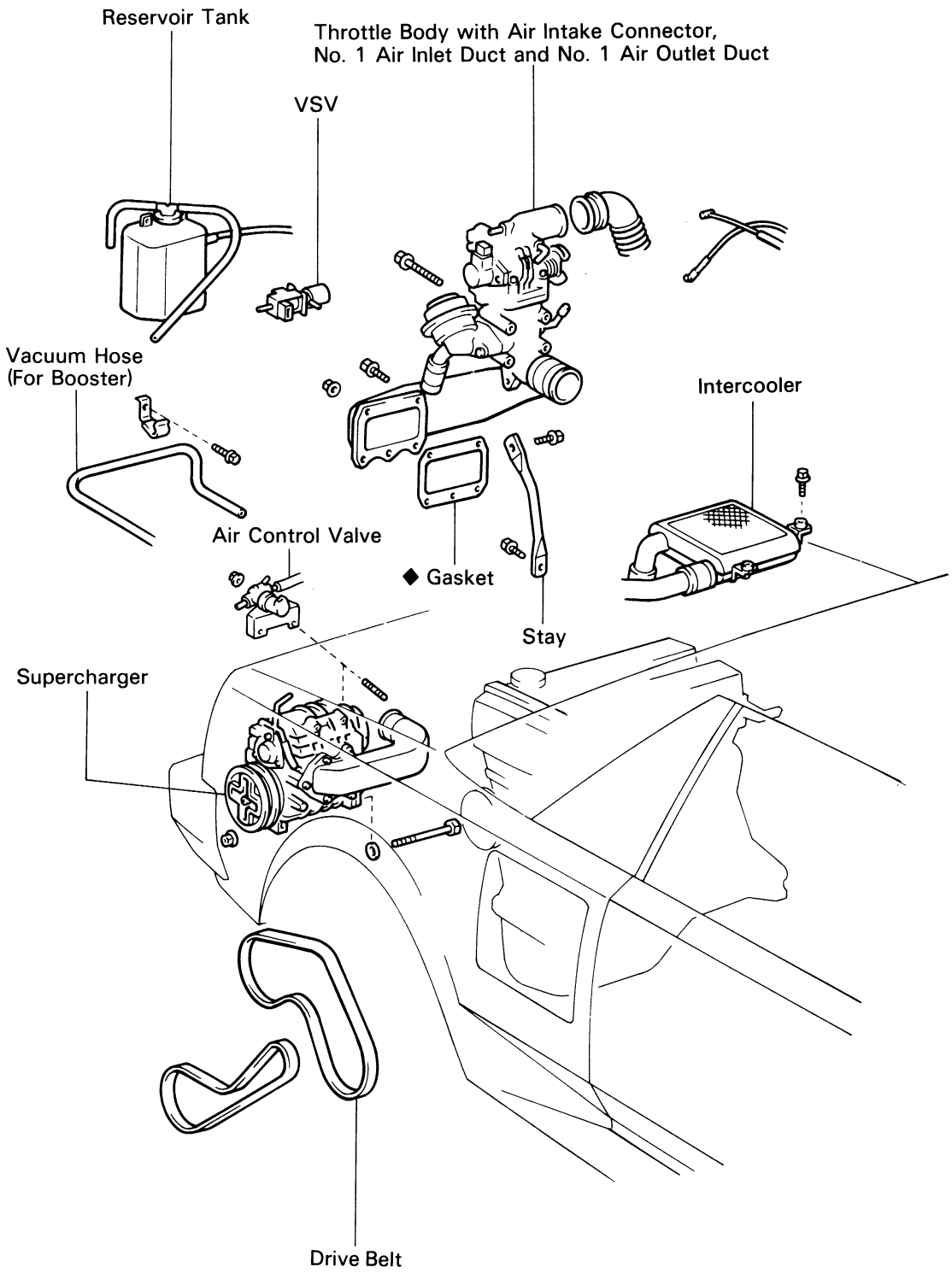

◆ Non-reusable part

SC0013

1. **DISCONNECT CABLE FROM NEGATIVE TERMINAL OF BATTERY**

2. **DRAIN ENGINE COOLANT**

3. **REMOVE RADIATOR RESERVOIR TANK**

4. **REMOVE VSV**

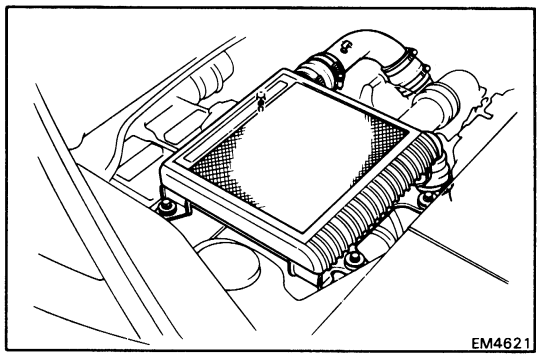

5. **REMOVE INTERCOOLER**

   Disconnect the two hose clamps, and remove the four bolts and intercooler.

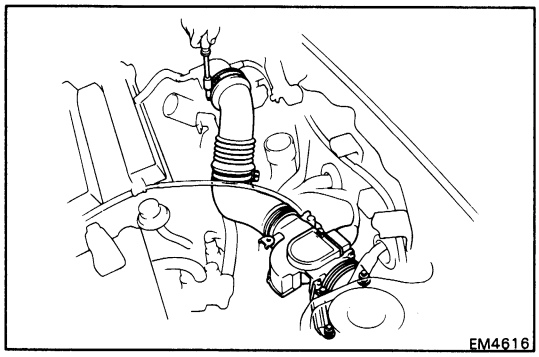

6. **REMOVE AIR FLOW METER WITH NO.3 AIR CLEANER HOSE**

   (a) Disconnect the air flow meter connector.

   (b) Remove the bolt and EGR VSV without disconnect the connector.

   (c) Loosen the two clamps, and remove the three bolts and air flow meter with No.3 air cleaner hose.

7. **DISCONNECT ACCELERATOR CABLE (ROD) AND THROTTLE CABLE**

8. **DISCONNECT FOLLOWING HOSES:**

   (a) PCV hose

   (b) Brake booster hose

   (c) ACV hose

   (d) A/C idle up vacuum hose

   (e) Emission control vacuum hoses

9. **REMOVE NO.I INTAKE AIR CONNECTOR PIPE WITH AIR HOSE**

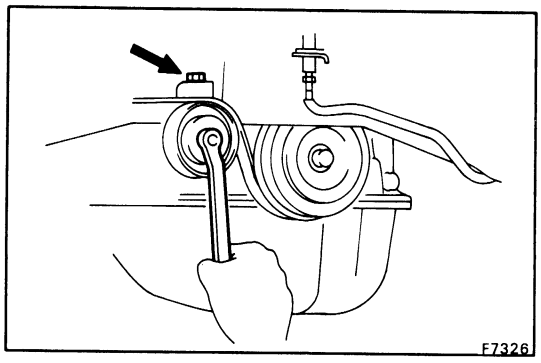

10. **REMOVE DRIVE BELT (FOR SUPERCHARGER)**

    Loosen the idler pulley lock nut and adjusting bolt, and remove the drive belt.

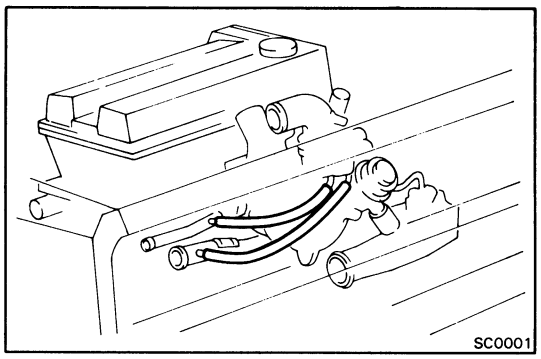

11. DISCONNECT NO.2 AND NO.3 WATER BY-PASS HOSES

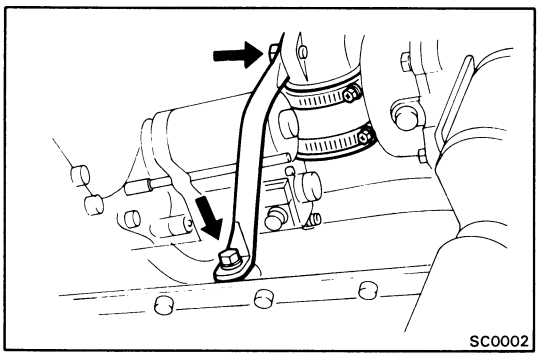

12. LOOSEN AIR HOSE CLAMP

13. REMOVE TWO BOLTS AND AIR INLET DUCT STAY

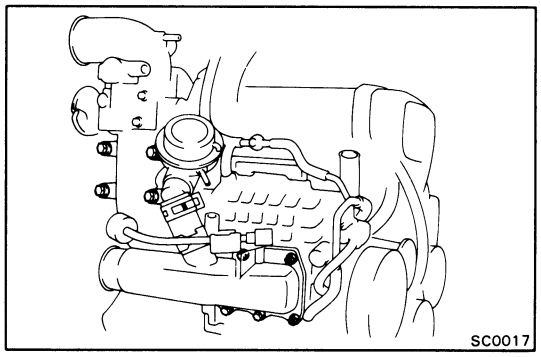

14. REMOVE THROTTLE BODY WITH AIR INTAKE CONNECTOR, NO.1 AIR INLET DUCT, AND NO.1 AIR OUTLET DUCT

(a) Remove the four bolt holding the No.1 inlet duct to the intake manifold.

(b) Remove the three bolts and two nuts holding the No.1 air outlet duct to the supercharger housing.

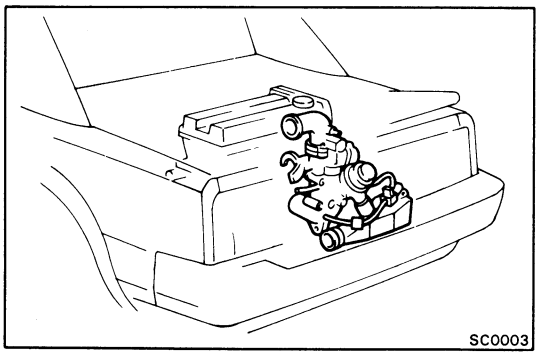

(c) Remove the throttle body with air intake connector, No.1 air inlet duct and No.1 air outlet duct.

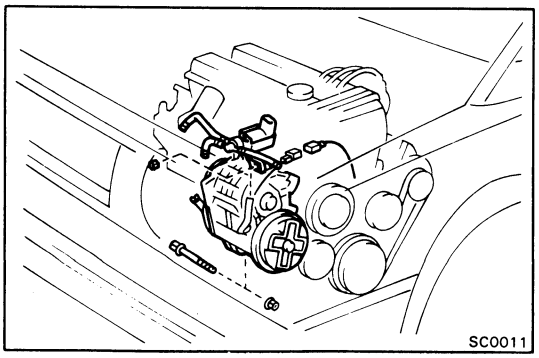

15. REMOVE SUPERCHARGER

(a) Disconnect the ACV and supercharger connectors.

(b) Disconnect the two ACV hoses.

(c) Remove the two nuts and ACV.

(d) Remove the pivot bolt and nut.

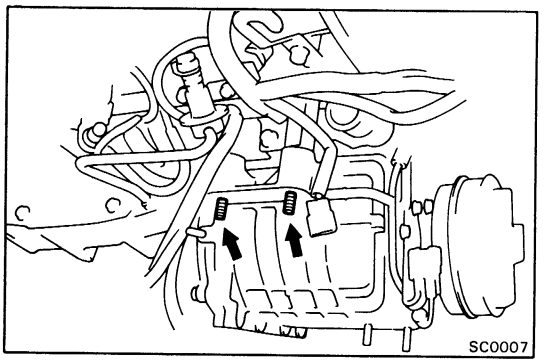

(e) Remove the two stud bolts.

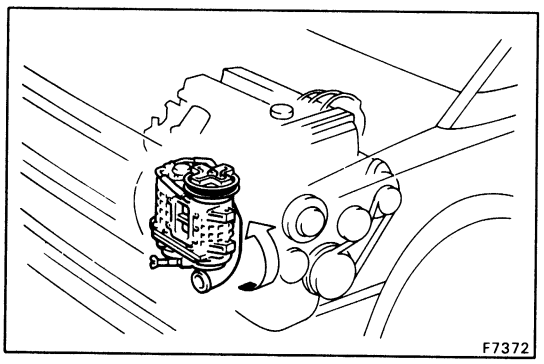

(f) As shown in the illustration, rotate the supercharger assembly so that the clutch hub is uppermost, then lift it upwards.

CAUTION: The vehicle body is easily scratched, so use a cloth or rag to protect it.

DISASSEMBLY OF SUPERCHARGER

Components

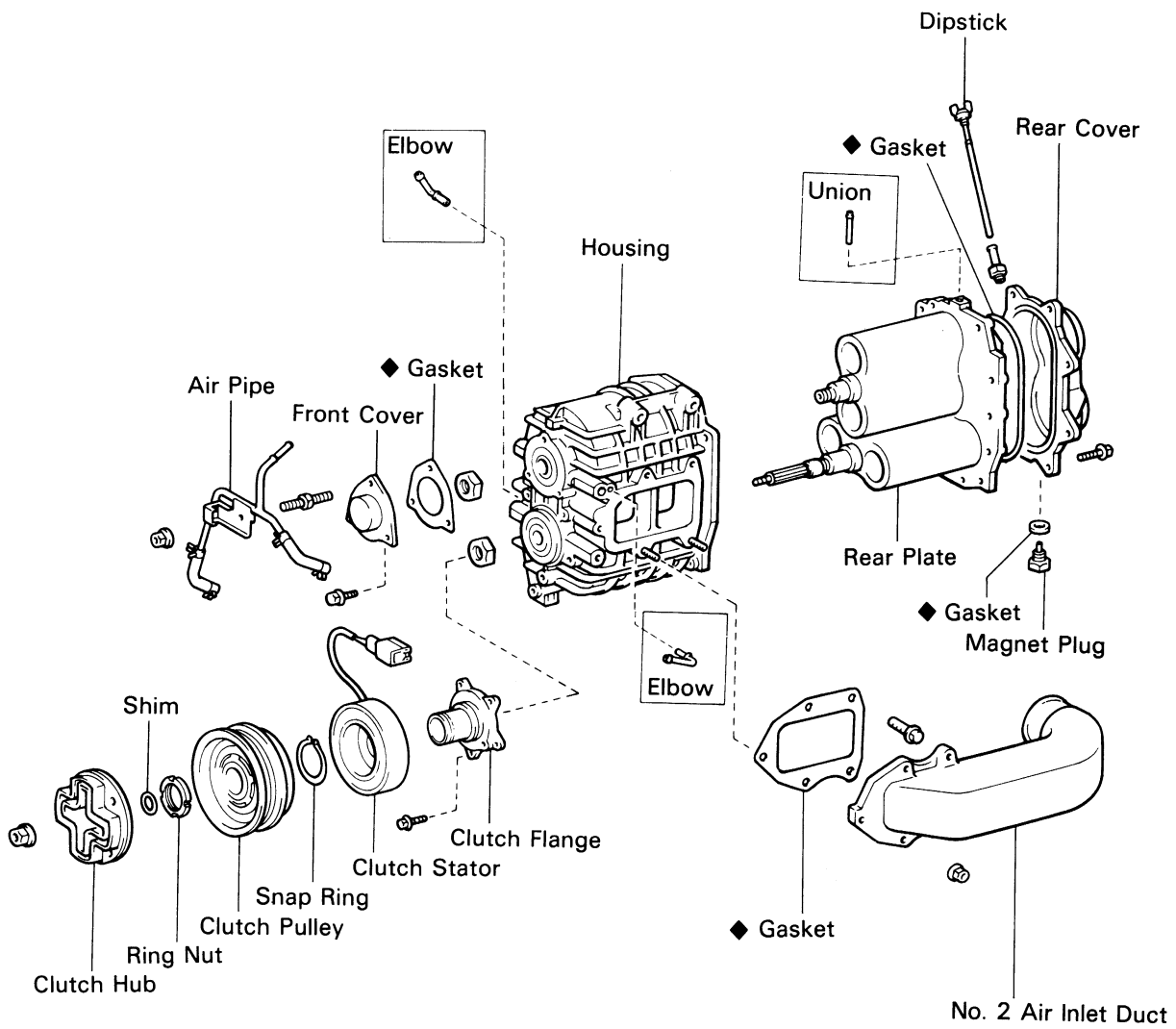

◆ Non-reusable part

SC0006

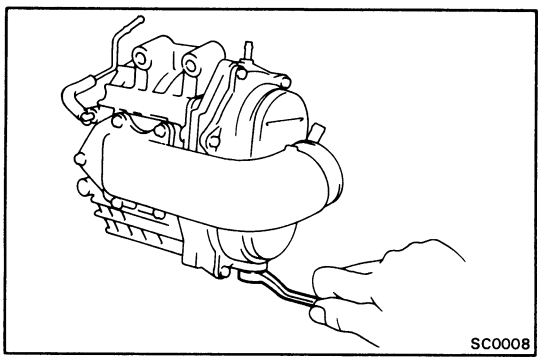

1. DRAIN SUPERCHARGER OIL

Remove the magnet plug under the rear cover and drain the oil.

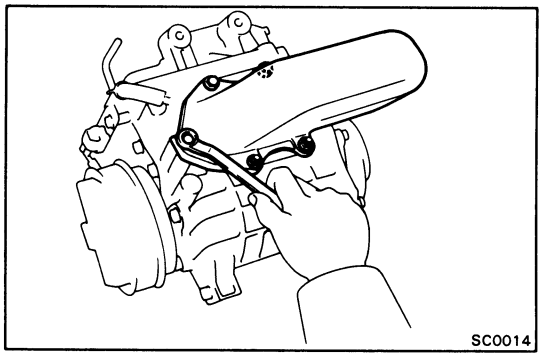

2. REMOVE NO.2 AIR INLET DUCT

Remove the five bolts and No.2 air inlet duct.

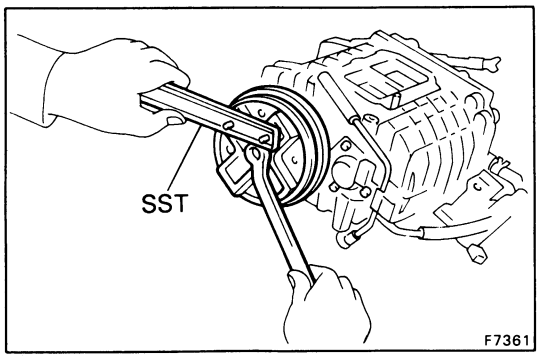

3. REMOVE CLUTCH HUB

Using SST, remove the nut, clutch hub and shim.

SST 09504-00011

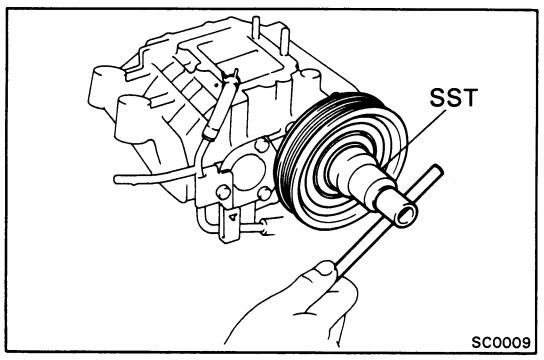

4. REMOVE CLUTCH PULLEY

(a) Using SST, remove the ring nut.

SST 09814-22010

(b) Remove the clutch pulley and shim.

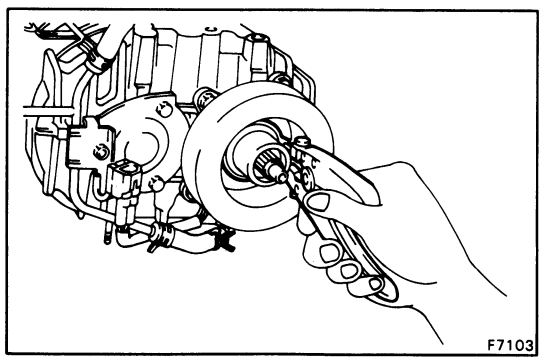

5. REMOVE CLUTCH STATOR

(a) Disconnect the connector from the clamp.

(b) Using snap ring pliers, remove the snap ring.

(c) Remove the clutch stator.

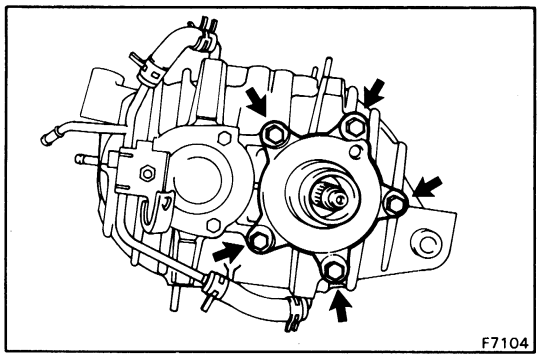

6. REMOVE CLUTCH FLANGE

Remove the five bolts and clutch flange.

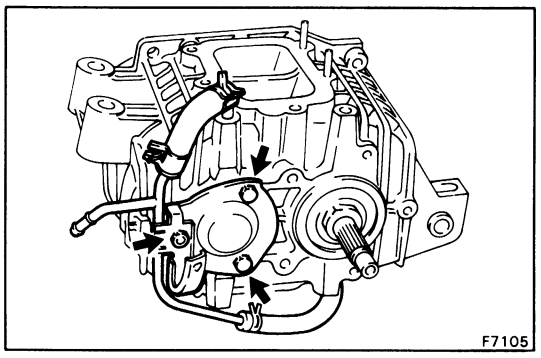

7. REMOVE FRONT COVER

(a) Disconnect the air hoses from the housing.

(b) Remove the nut and air pipe.

(c) Remove the two bolts, stud bolt, front cover and gasket.

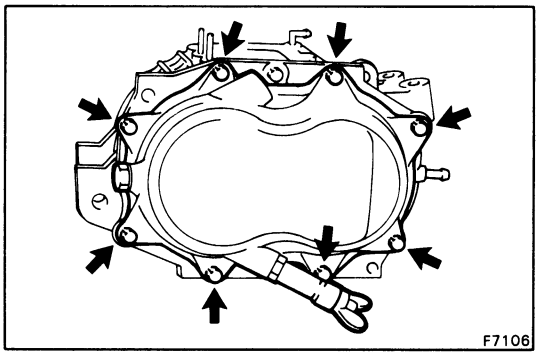

8. REMOVE REAR COVER

Remove the eight bolts, rear cover and gasket.

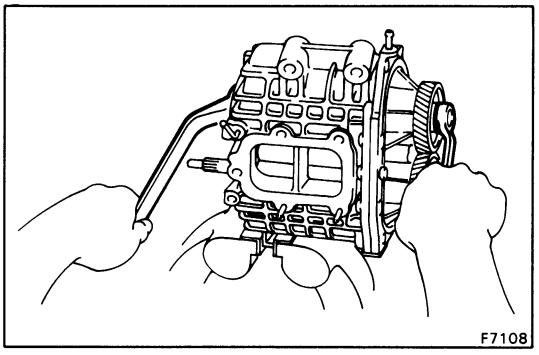

9. REMOVE REAR PLATE

(a) Mount the supercharger in a soft jaw vise.

(b) Secure the bolt and remove the nut. Remove the two nuts.

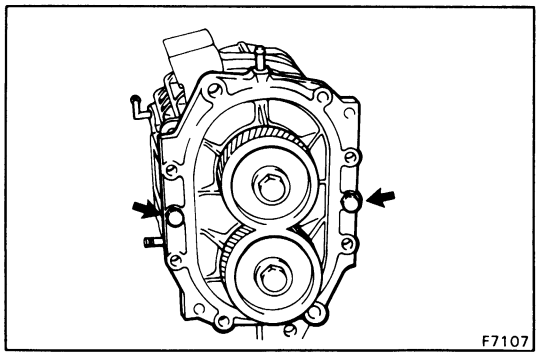

(c) Remove the two bolts and rear plate.

10. IF NECESSARY, REMOVE ELBOWS

11. IF NECESSARY, REMOVE UNION

INSPECTION OF SUPERCHARGER COMPONENTS

1. INSPECT HOUSING

Check that there is no damage on the inside surface of the housing.

2. INSPECT ROTOR

(a) Check that there is no damage on the outside of the rotor.

(b) Check that there is no looseness in the rotor and shaft and that the rotor rotate smoothly.

3. INSPECT BEARINGS

Check that the bearing is not rough or worn.

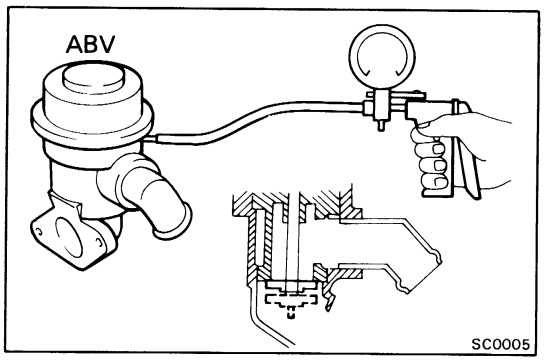

INSPECTION OF AIR BY-PASS VALVE (ABV) AND AIR CONTROL VALVE (ACV) SYSTEM

1. INSPECT AIR BY-PASS VALVE (ABV)

Apply a vacuum to the ABV and measure the vacuum when the valve opens.

Partially open vacuum:
105 – 165 mmHg
(4.134 – 6.496 in.Hg, 13.00 – 21.99 kPa)
Fully open vacuum:
245 – 395 mmHg
(9.646 – 15.551 in.Hg, 32.66 – 52.65 kPa)

If the vacuum is not within specification, replace the ABV.

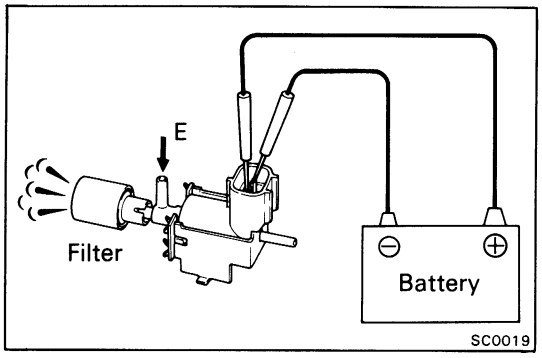

2. INSPECT ABV VSV

(a) Apply battery voltage across the terminals.

(b) Check that air flows from pipe E to air filter.

(c) Disconnect the battery terminals.

(d) Check that air flows from pipe E to G.

If a problem is found, replace the VSV.

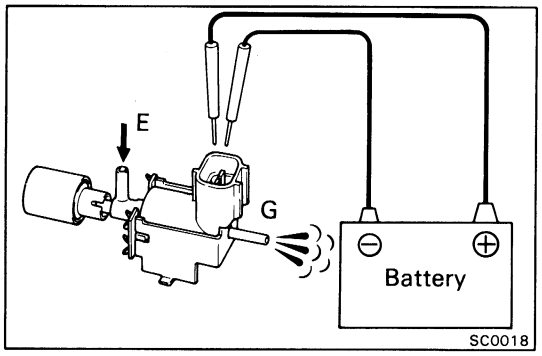

3. INSPECT ACV

(a) Apply battery voltage across the terminals.

(b) Check that air flows from pipe A to B and C.

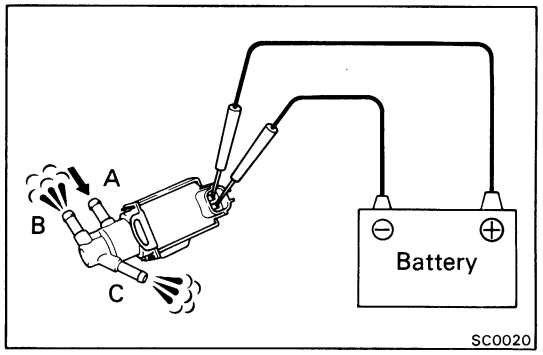

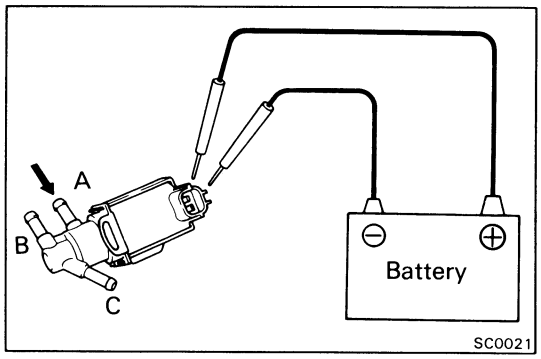

(c) Disconnect the battery terminals.

(d) Check that air does not flow from pipe A to B or C.

If a problem is found, replace the ACV.

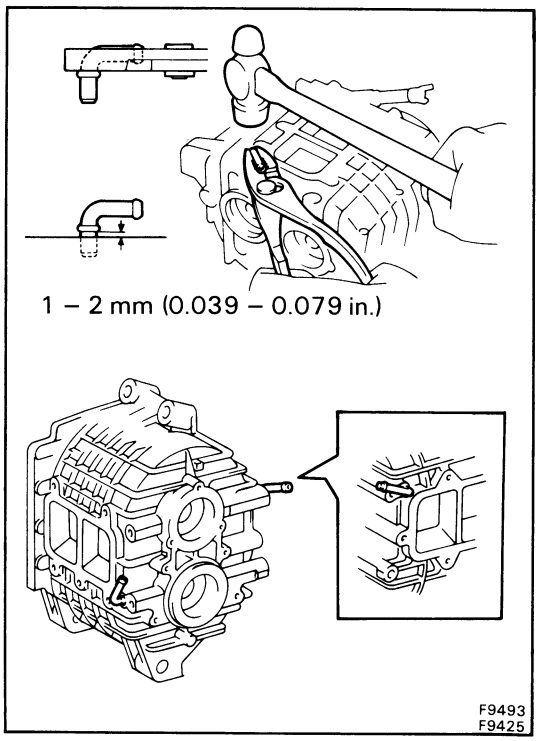

INSTALLATION OF SUPERCHARGER

(See page SC-9)

1. INSTALL ELBOWS

Using pliers and a hammer, tap in the elbow so that it faces the same way as in the illustration.

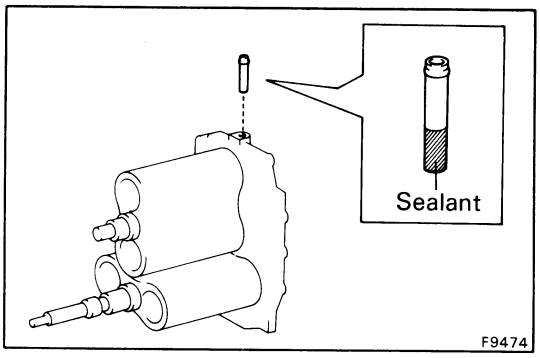

2. INSTALL UNION

(a) Apply a light coat of sealant to the part of the part of the union to be inserted into the rear plate.

Sealant: Part No. 08833-00090, THREE BOND 1131, LOCTITE 518 or equivalent

(b) Using a hammer, tap the union into place with a block of wood, etc., placed between the union and the hammer.

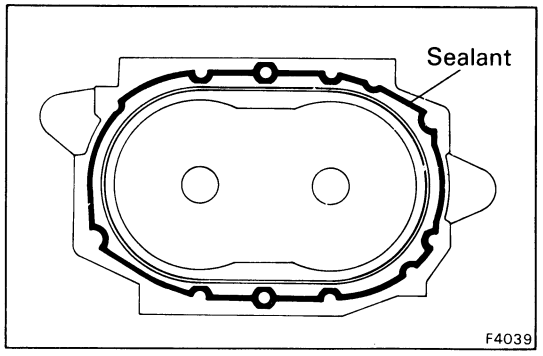

3. INSTALL REAR PLATE

(a) Remove any packing material and be careful not to drop oil on the contacting surfaces of the rear plate and housing.

(b) Apply engine oil to four locations on the upper surface of the rotor.

(c) Apply a light coat of sealant to the outer edge of the groove on the side matching the housing.

Sealant: Part No. 08833-00090, THREE BOND 1131, LOCTITE 518 or equivalent

CAUTION: Do not apply the sealant too liberally or it will overflow the groove in the housing and be squeezed inside the housing.

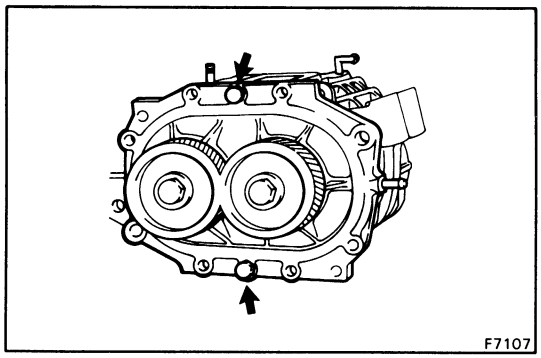

NOTE: The groove in the housing is to prevent sealant being squeezed inside housing.

(d) Install the rear plate as soon as the seal packing is applied.

(e) Install and torque the two bolts.

Torque: 50 kg-cm (43 in.-lb, 4.9 N·m)

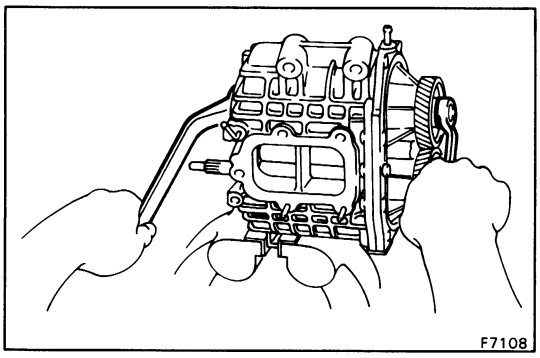

(f) Mount the supercharger in a soft jaw vice.

(g) Secure the bolt and install the nut. Install the two nuts.

Torque: 500 kg-cm (36 ft-lb, 49 N·m)

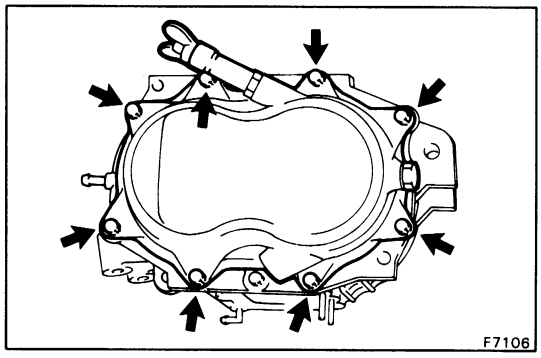

4. INSTALL REAR COVER

Install a new gasket and the rear cover with the eight bolts.

Torque: 50 kg-cm (43 in.-lb, 4.9 N·m)

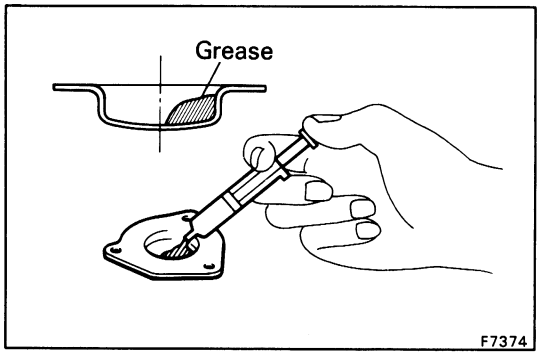

5. INSTALL HOUSING FRONT COVER

(a) Remove the grease inside the housing front cover.

(b) Pour supercharger grease into the housing front cover.

Grease: Part No.08887-80109 or equivalent

Grease capacity: 2 g (0.09 oz)

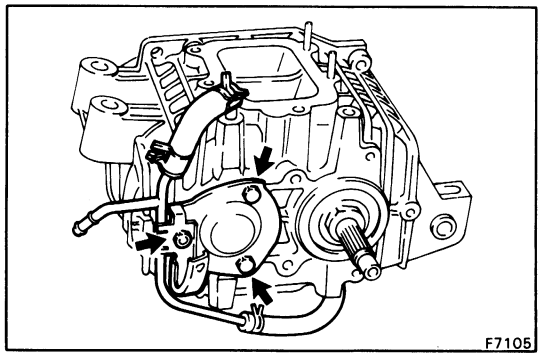

(c) Install a new gasket and the housing front cover with the two bolts and stud bolt.

Torque: 50 kg-cm (43 in.-lb, 4.9 N·m)

(d) Install the air pipe with the nut.

Torque: 50 kg-cm (43 in.-lb, 4.9 N·m)

(e) Connect the air hoses to the housing.

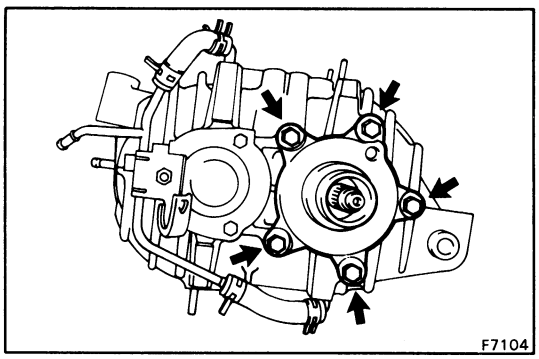

6. INSTALL CLUTCH FLANGE

Install the clutch flange with the five bolts.

Torque: 50 kg-cm (43 in.-lb, 4.9 N·m)

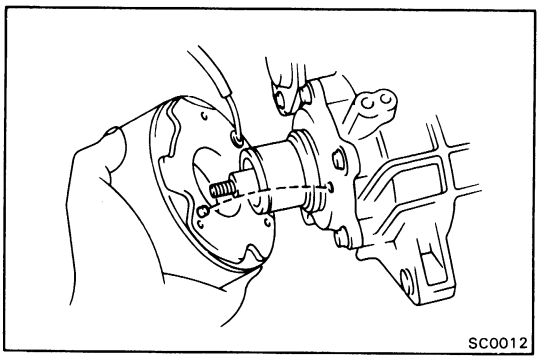

7. INSTALL CLUTCH STATOR

(a) Align the hole of the clutch flange with the protrusion of the clutch stator.

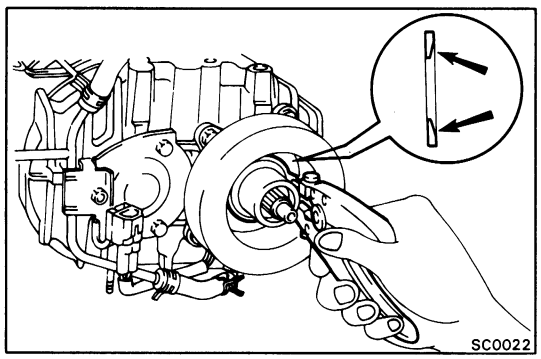

(b) Using snap ring pliers, install the snap ring, facing the taper side toward the front.

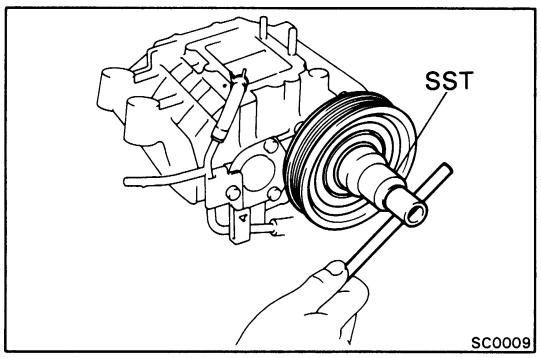

8. INSTALL CLUTCH PULLEY

(a) Install the clutch pulley.

(b) Using SST, install the ring nut.

SST 09814-22010

Torque: 250 kg-cm (18 ft-lb, 25 N·m)

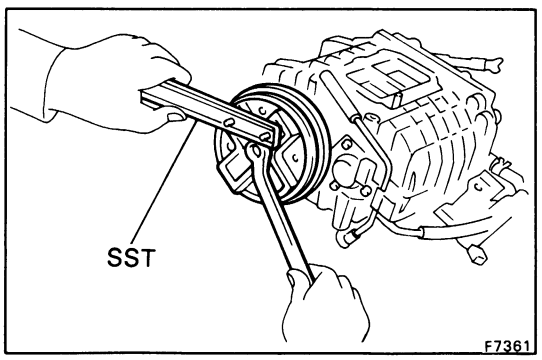

9. INSTALL CLUTCH HUB

(a) On the shaft install the shim used previously, then install the clutch hub.

(b) Using SST, install and torque the nut.

SST 09504-00011

Torque: 200 kg-cm (14 ft-lb, 20 N·m)

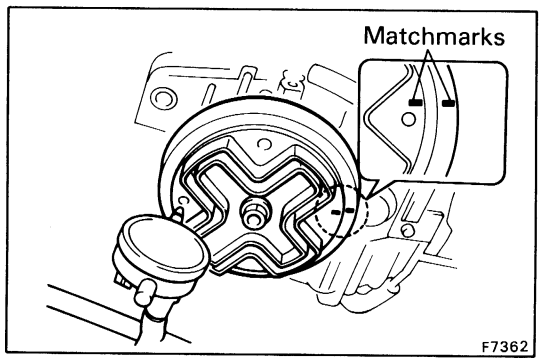

10. INSPECT AND ADJUST AIR GAP OF MAGNET CLUTCH

(a) Set up a dial gauge as shown in the illustration.

(b) Place the matchmarks to ensure that the positions of the pulley and clutch hub remain unchanged.

(c) Apply battery voltage between the terminals of the connector, and measure the value of movement of the clutch hub.

NOTE: Take measurements starting from the second time the clutch hub is operated.

(d) Measure the other three locations using the same method. Use the average value of the four locations for the air gap value.

Standard air gap: 0.35 – 0.65 mm (0.0138 – 0.0256 in.)

If the air gap is not within specification, replace the shim.

Adjusting shim thickness mm (in.)	
0.1 (0.004)	0.7 (0.028)
0.3 (0.012)	0.9 (0.035)
0.5 (0.020)	1.1 (0.043)

CAUTION: When measuring, check that the location marks for the pulley and clutch hub are in the correct position.

NOTE: If the air gap is greater than specification, use a thinner shim. If the air gap is less than specifications, use a thicker shim.

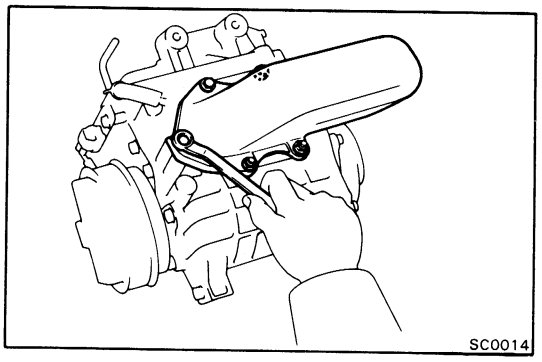

11. INSTALL NO.2 AIR INLET DUCT

Install a new gasket and No.2 air inlet duct with the three bolts and two nuts.

Torque: 95 kg-cm (82 in.-lb, 9.4 N·m)

12. FILL WITH SUPERCHARGER OIL

(a) Clean and install the magnet plug with a new gasket.

(b) Fill the supercharger with new oil.

Supercharger oil: Part No.08885 - 80108 or equivalent

Oil capacity: 130 cc (7.9 cu in.)

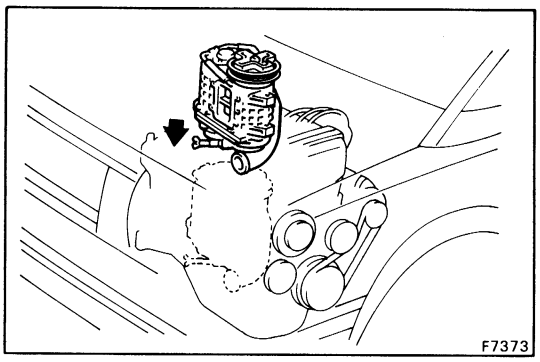

INSTALLATION OF SUPERCHARGER

(See page SC-5)

1. INSTALL SUPERCHARGER

(a) As shown in the illustration, insert the supercharger with the clutch hub uppermost.

CAUTION: The vehicle body is easily scratched, so use a cloth or rag to protect it.

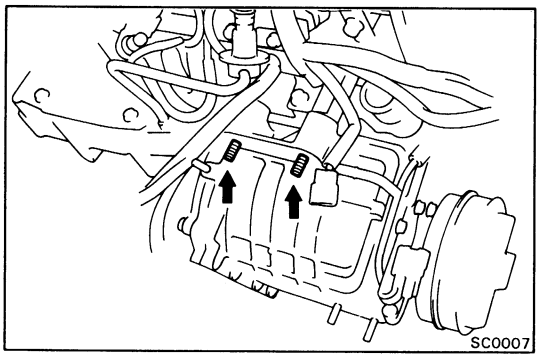

(b) Install the two stud bolts.

Torque: 350 kg-cm (25 ft-lb, 34 N·m)

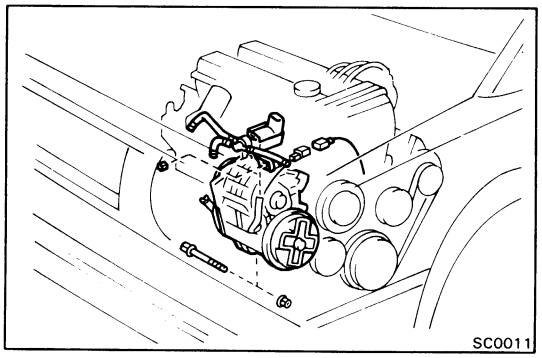

(c) Fix the lower part of the supercharger in place by inserting the pivot bolt from the rear of the engine.

(d) Install the supercharger by tightening the two nuts together with the air control valve.

Torque:

Stud bolt side	**350 kg-cm (25 ft-lb, 34 N·m)**
Pivot bolt side	**600 kg-cm (47 ft-lb, 64 N·m)**

(e) Connect the ACV and supercharger connectors.

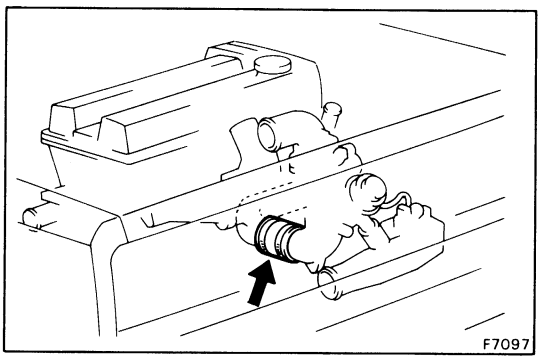

2. INSTALL THROTTLE BODY WITH AIR INTAKE CONNECTOR NO.1 AIR INLET DUCT, AND NO.1 AIR OUTLET DUCT

(a) Push in the air hose to the No.2 air inlet duct.

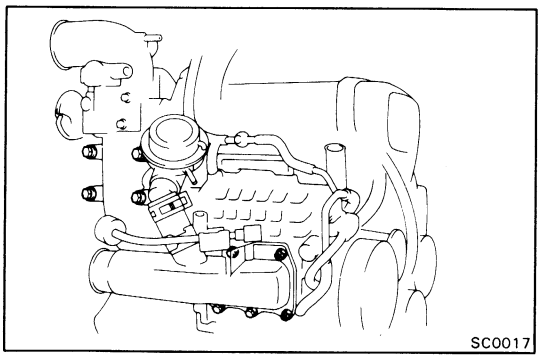

(b) Install the four bolts holding the No.1 inlet duct to the intake manifold.

Torque: 190 kg-cm (14 ft-lb, 19 N·m)

(c) Install a new gasket and the No.1 air outlet duct with the three bolts and two nuts.

Torque: 100 kg-cm (7 ft-lb, 10 N·m)

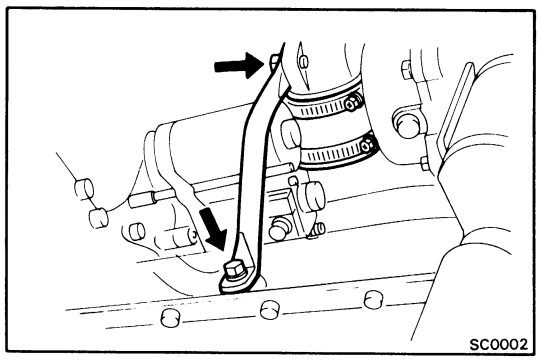

3. INSTALL AIR INLET DUCT STAY

Install the air inlet duct stay with the two bolts.

Torque: Duct side 220 kg-cm (16 ft-lb, 22 N·m)
Block side 400 kg-cm (29 ft-lb, 39 N·m)

4. TIGHTEN AIR HOSE CLAMP

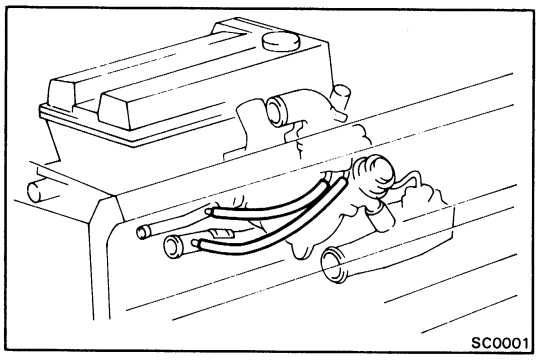

5. CONNECT NO.2 AND NO.3 WATER BY-PASS HOSES

6. INSTALL DRIVE BELT
(See page MA-4)

7. INSTALL NO.1 INTAKE AIR CONNECTOR PIPE WITH AIR HOSE

8. CONNECT FOLLOWING HOSE:

(a) PCV hose
(b) Brake booster hose
(c) ACV hose
(d) A/C idle up vacuum hose
(e) Emission control vacuum hoses

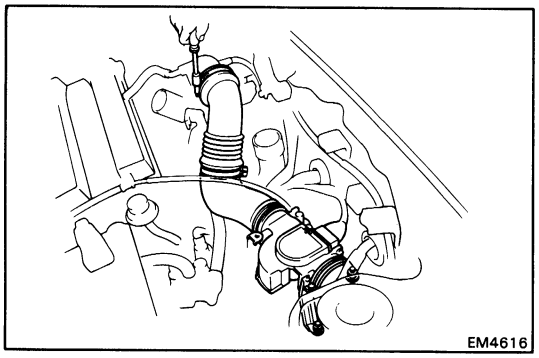

9. CONNECT ACCELERATOR CABLE (ROD) AND THROTTLE CABLE

10. INSTALL AIR FLOW METER WITH NO.3 AIR CLEANER HOSE

(a) Install the air flow meter with No.3 air cleaner hose with the three bolts and two clamps.
(b) Install the EGR VSV with the bolt.
(c) Connect the air flow meter connector.

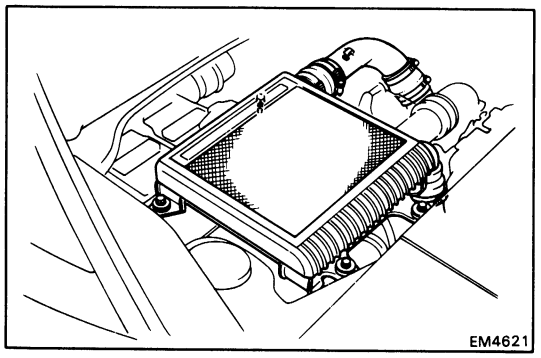

11. INSTALL INTERCOOLER

Install the intercooler with four bolts and two clamps.

12. INSTALL VSV

13. INSTALL RADIATOR RESERVOIR TANK

14. FILL WITH ENGINE COOLANT

15. CONNECT CABLE TO NEGATIVE TERMINAL OF BATTERY

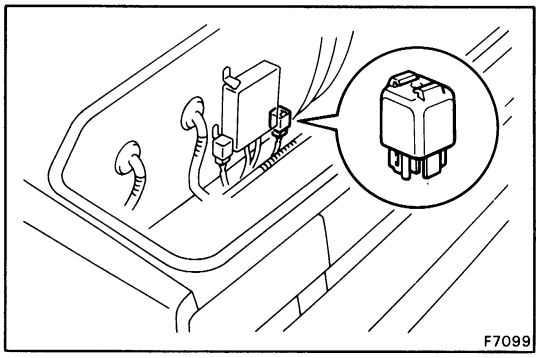

SUPERCHARGER RELAY

INSPECTION OF SUPERCHARGER RELAY

INSPECT SUPERCHARGER RELAY

Location: Inside of the luggage compartment trim.

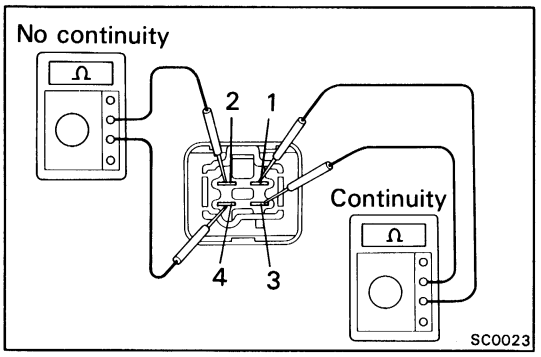

A. Inspect Relay Continuity

(a) Using an ohmmeter, check that there is continuity between terminals 1 and 3.

(b) Check that there is no continuity between terminal 2 and 4.

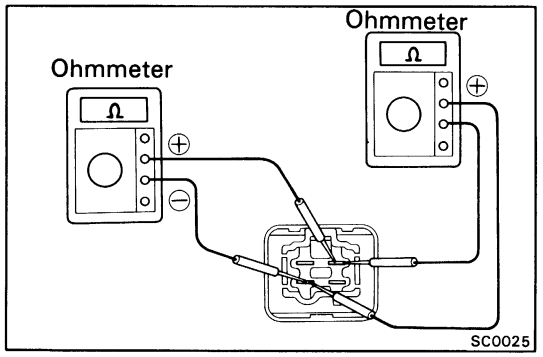

(c) Check the continuity between terminals 1 and 4.

(d) Reverse the polarity of the tester probes and repeat step (c).

(e) Check that one shows continuity and the other shows no continuity.

If continuity is not as specified, replace the relay.

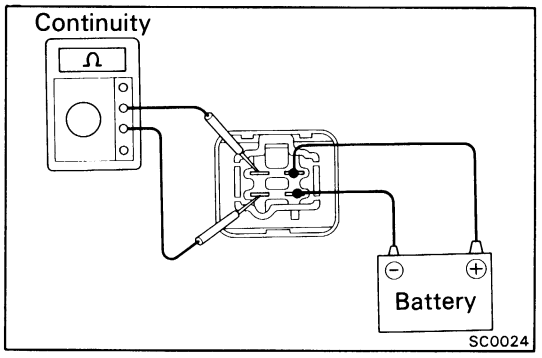

B. Inspect Relay Operation

(a) Apply battery voltage across terminals 1 and 3.

(b) Check that there is continuity between terminals 2 and 4.

If operation is not as specified, replace the relay.

EMISSION CONTROL SYSTEMS

	Page
SYSTEM PURPOSE	EC-2
COMPONENT LAYOUT AND SCHEMATIC DRAWING (4A-GE)	EC-3
COMPONENT LAYOUT AND SCHEMATIC DRAWING (4A-GZE)	EC-4
POSITIVE CRANKCASE VENTILATION (PCV) SYSTEM	EC-5
FUEL EVAPORATIVE EMISSION CONTROL (EVAP) SYSTEM	EC-6
DASH POT (DP) SYSTEM	EC-8
EXHAUST GAS RECIRCULATION (EGR) SYSTEM (4A-GE)	EC-10
EXHAUST GAS RECIRCULATION (EGR) SYSTEM (4A-GZE)	EC-16
THREE-WAY CATALYST (TWC) SYSTEM	EC-21

NOTE: TROUBLESHOOTING
(See page EM-2)

SYSTEM PURPOSE

System	Abbreviation	Purpose
Positive crankcase ventilation	PCV	Reduces blow-by gas (HC)
Fuel evaporative emission control	EVAP	Reduces evaporative HC
Dash pot	DP	Reduces HC and CO
Exhaust gas recirculation	EGR	Reduces NOx
Three-way catalyst	TWC	Reduces HC, CO and NOx
Electronic fuel injection*	EFI	Regulates all engine conditions for reduction of exhaust emissions.

* For inspection and repair of the EFI system, refer to EFI section.

COMPONENT LAYOUT AND SCHEMATIC DRAWING (4A-GE)

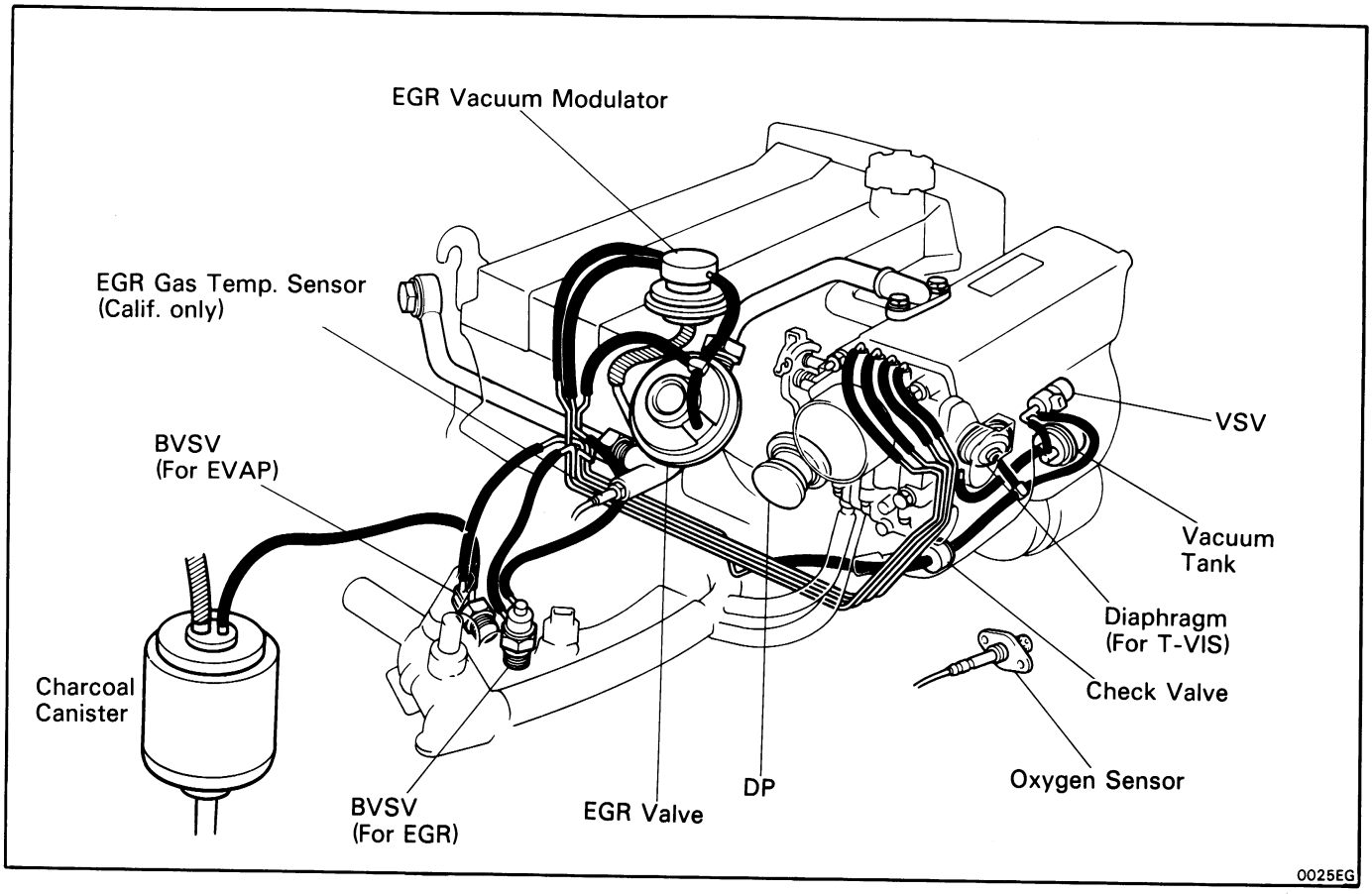

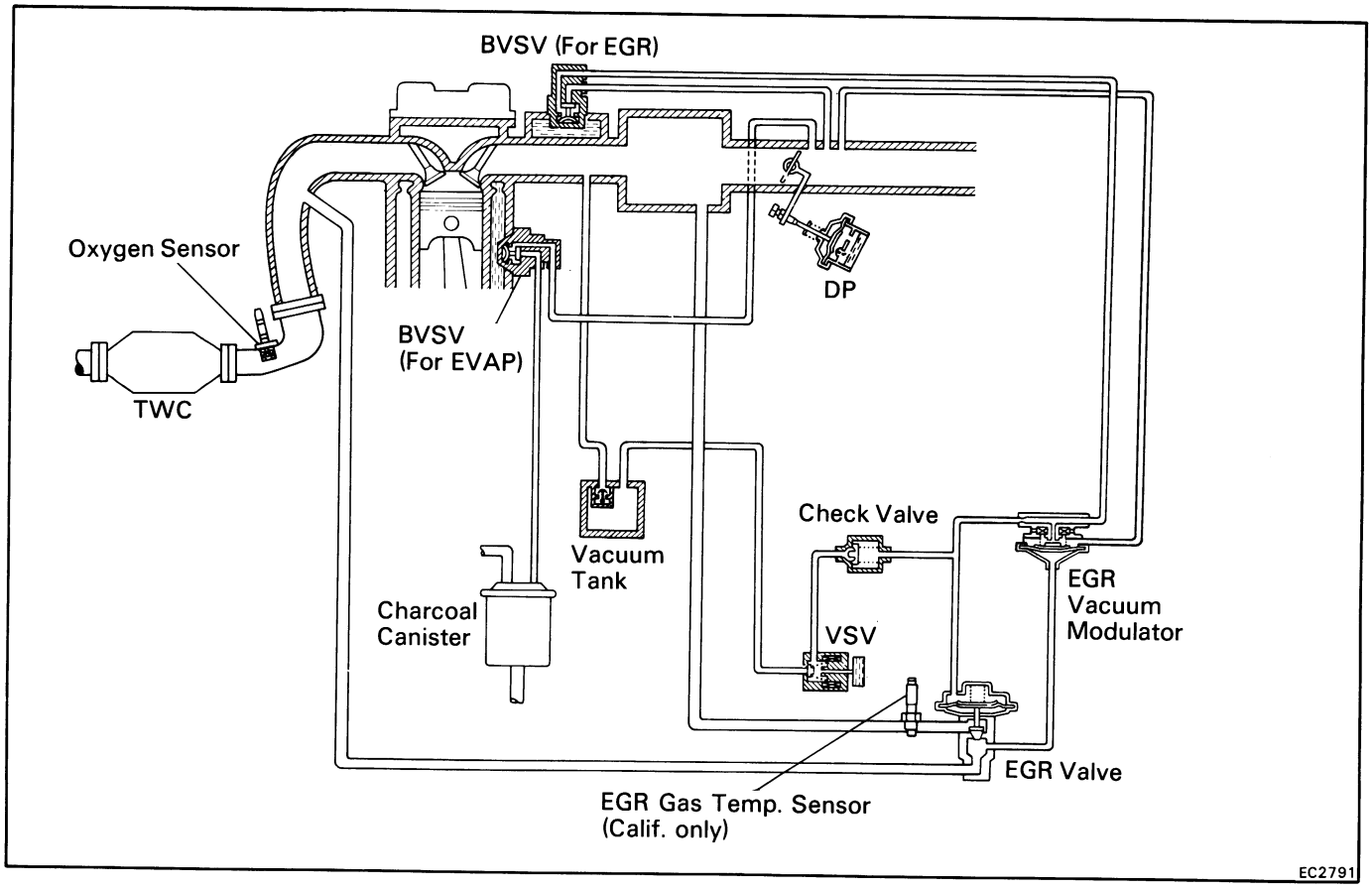

COMPONENT LAYOUT AND SCHEMATIC DRAWING (4A-GZE)

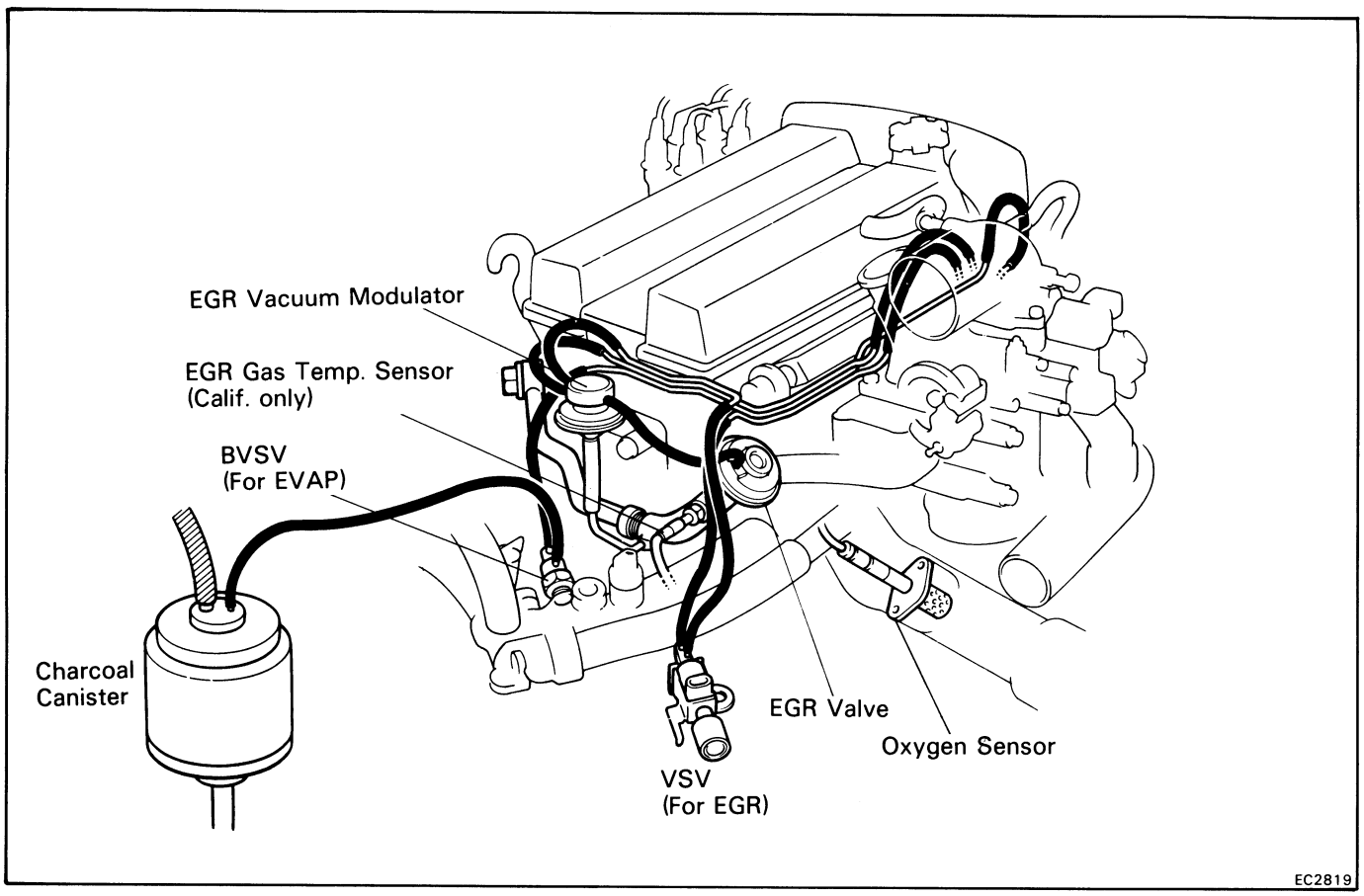

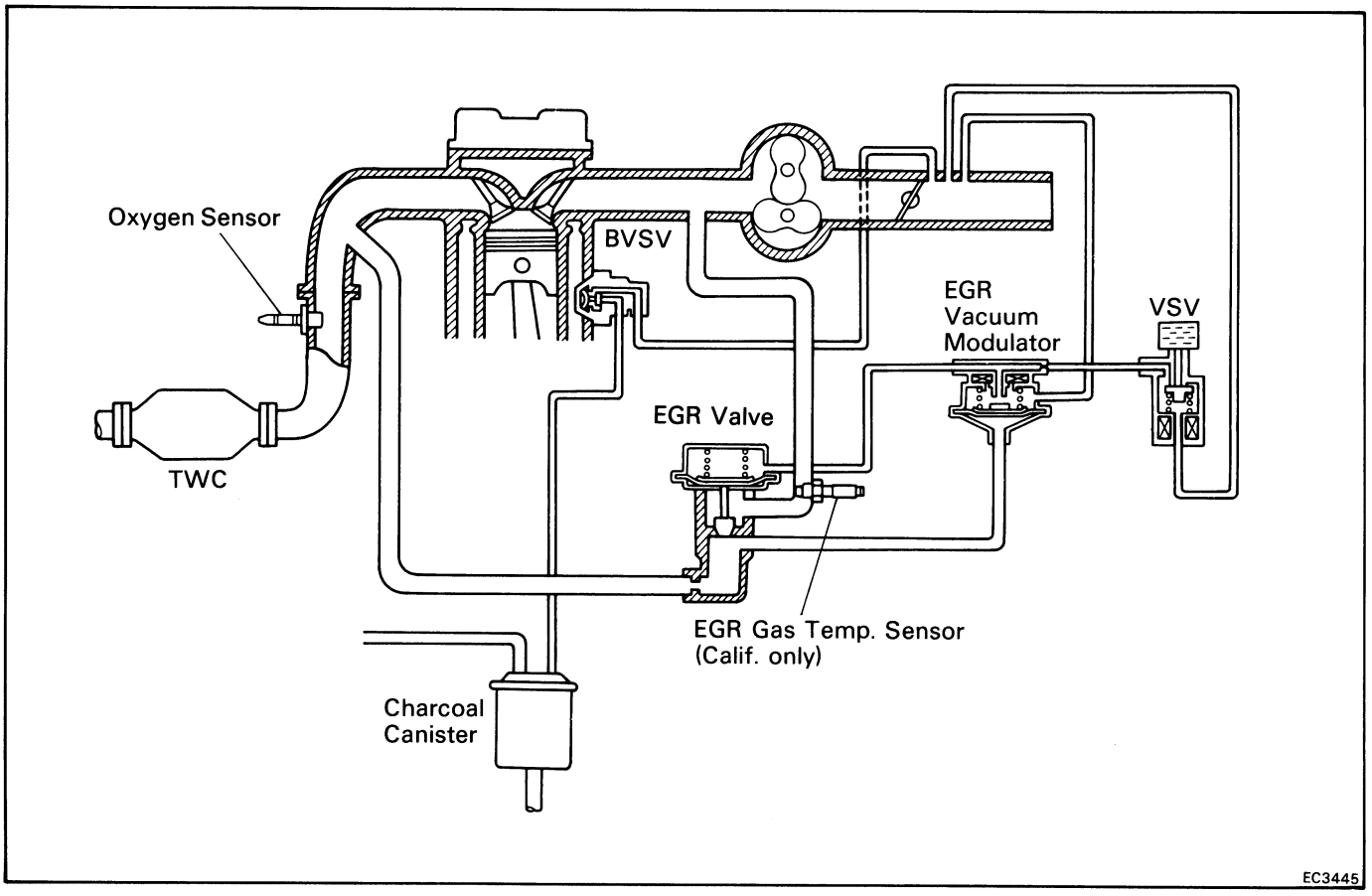

POSITIVE CRANKCASE VENTILATION (PCV) SYSTEM

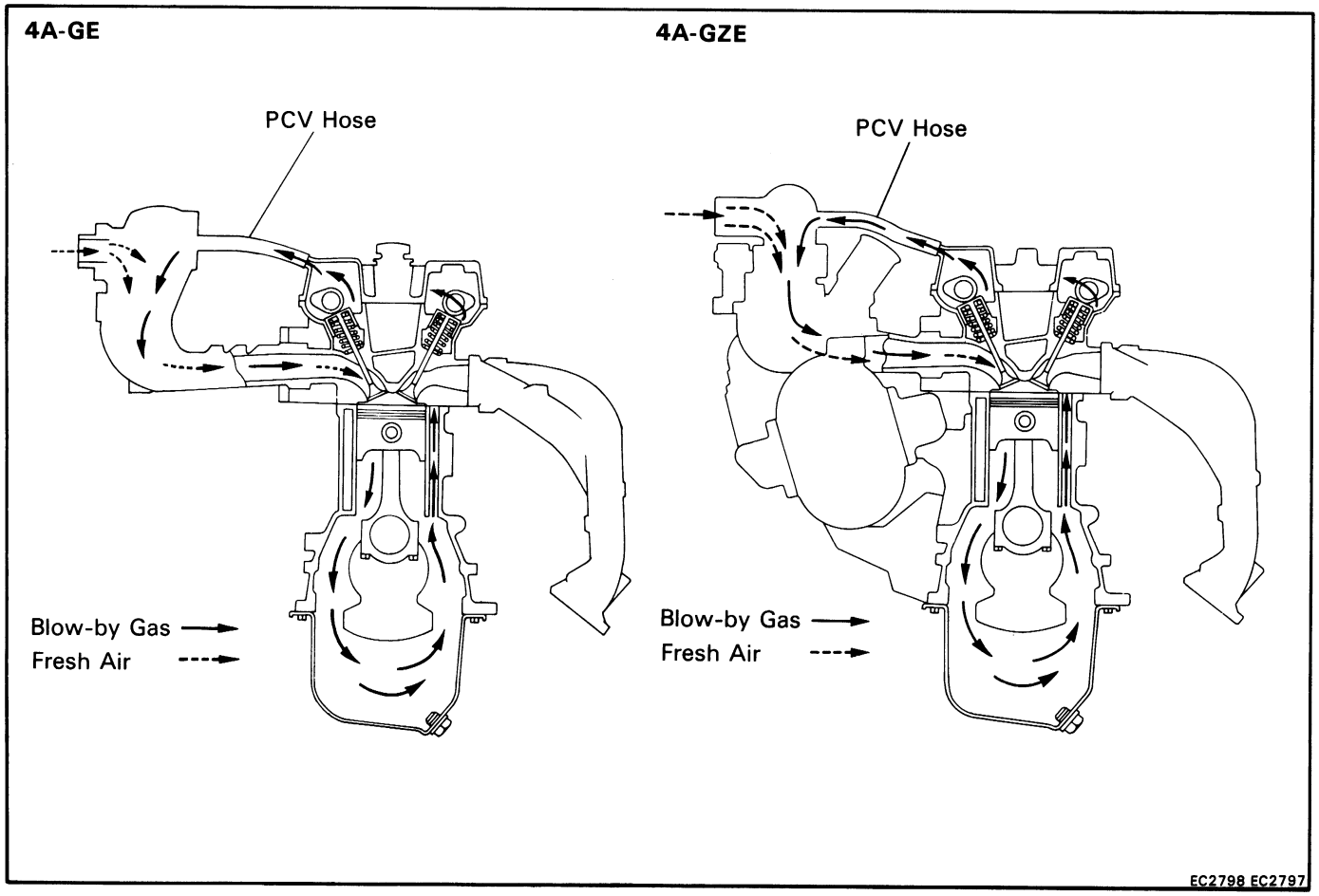

To reduce HC emissions, crankcase blow-by gas (HC) is routed to the intake manifold for combustion in the cylinders.

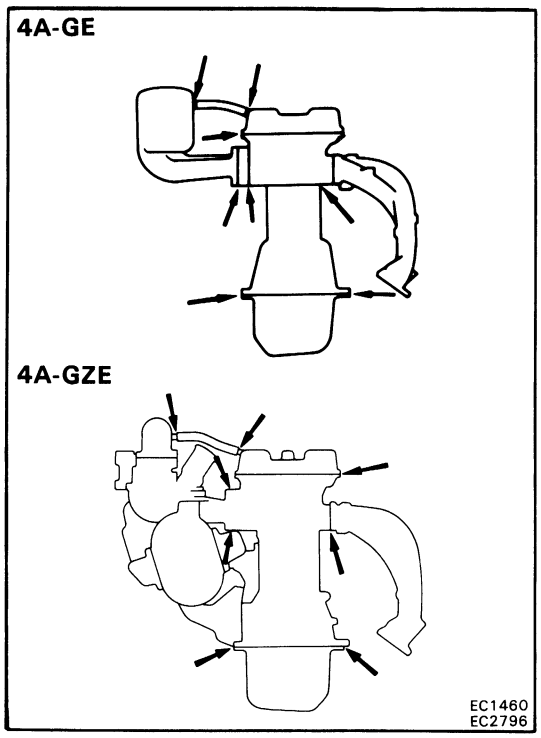

INSPECTION OF PCV HOSES AND CONNECTIONS

VISUALLY INSPECT HOSES, CONNECTIONS AND GASKETS

Check for cracks, leaks or damage.

FUEL EVAPORATIVE EMISSION CONTROL (EVAP) SYSTEM

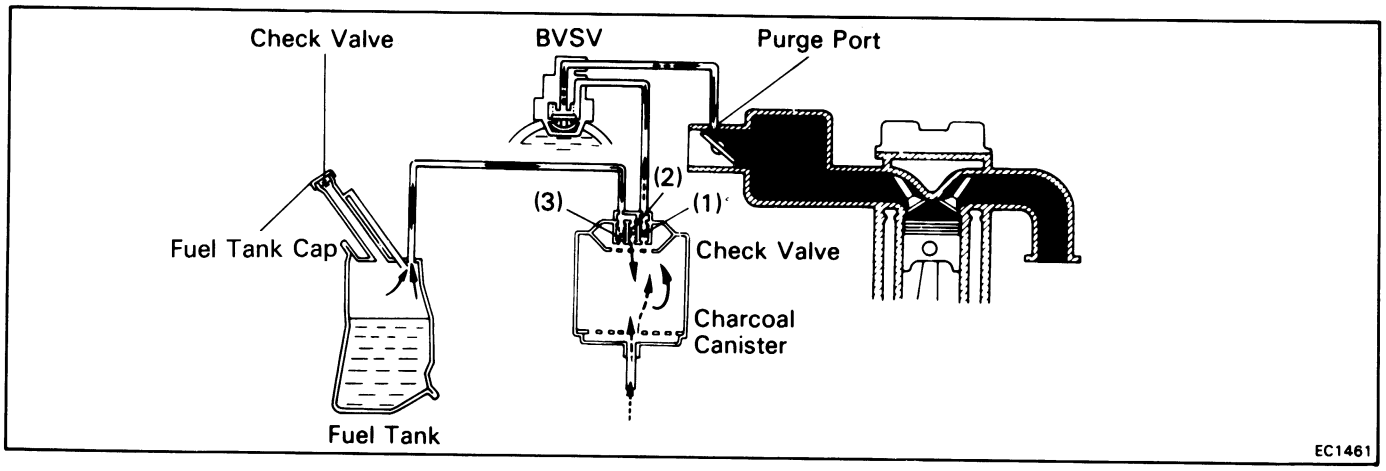

To reduce HC emissions, evaporated fuel from the fuel tank is routed through the charcoal canister to the intake manifold for combustion in the cylinders.

Coolant Temp.	BVSV	Throttle Valve Opening	Canister Check Valve			Check Valve in Cap	Evaporated Fuel (HC)
			(1)	(2)	(3)		
Below 35°C (95°F)	CLOSED	—	—	—	—	—	HC from tank is absorbed into the canister.
Above 54°C (129°F)	OPEN	Positioned below purge port	CLOSED	—	—	—	
		Positioned above purge port	OPEN	—	—	—	HC from canister is led into air intake manifold.
High pressure in tank	—	—	—	OPEN	CLOSED	CLOSED	HC from tank is absorbed into the canister.
High vacuum in tank	—	—	—	CLOSED	OPEN	OPEN	Air is led into the fuel tank.

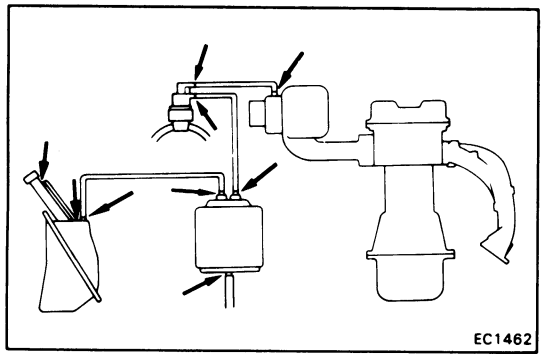

INSPECTION OF FUEL VAPOR LINES, FUEL TANK AND TANK CAP

1. **VISUALLY INSPECT LINES AND CONNECTIONS**
   Look for loose connections, kinks or damage.

2. **VISUALLY INSPECT FUEL TANK**
   Look for deformation, cracks or fuel leakage.

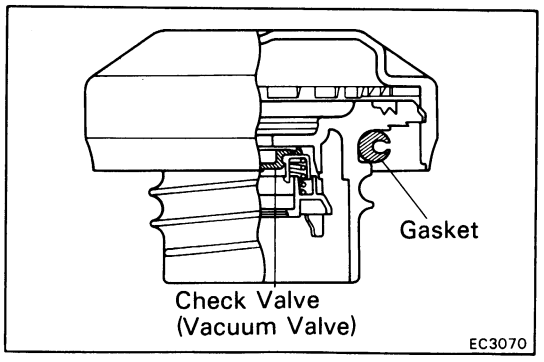

3. **VISUALLY INSPECT FUEL TANK CAP**
   Look for a damaged or deformed gasket and cap.
   If necessary, repair or replace the cap.

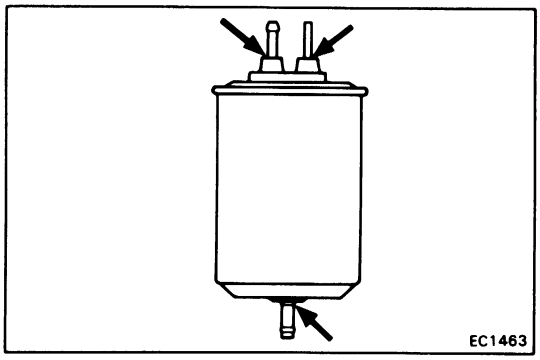

INSPECTION OF CHARCOAL CANISTER

1. **REMOVE CHARCOAL CANISTER**

2. **VISUALLY INSPECT CHARCOAL CANISTER CASE**

   Look for cracks or damage.

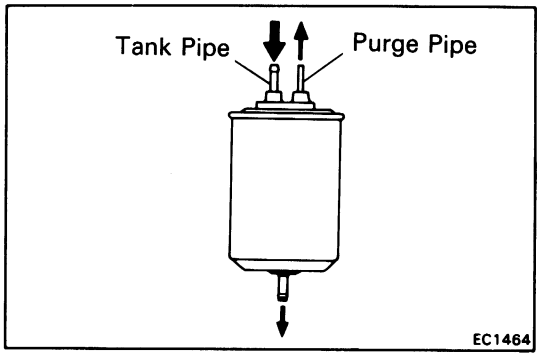

3. **CHECK FOR CLOGGED FILTER AND STUCK CHECK VALVE**

   (a) Using low pressure compressed air, blow into the tank pipe and check that air flows without resistance from the other pipes.

   (b) Blow into the purge pipe and check that air does not flow from the other pipes.

   If a problem is found, replace the charcoal canister.

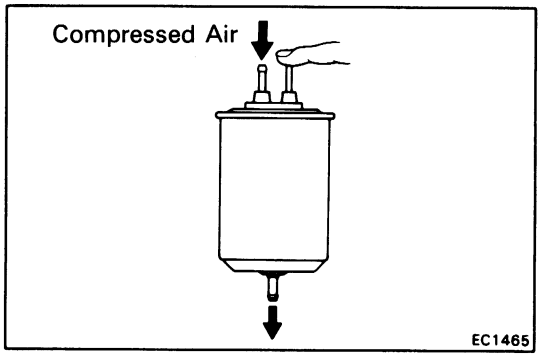

4. **CLEAN FILTER IN CANISTER**

   Clean the filter by blowing 3 kg/cm^2 (43 psi, 294 kPa)of air into the tank pipe while holding the other upper canister pipe closed.

   NOTE:
   - Do not attempt to wash the canister.
   - No activated carbon should come out.

5. **INSTALL CHARCOAL CANISTER**

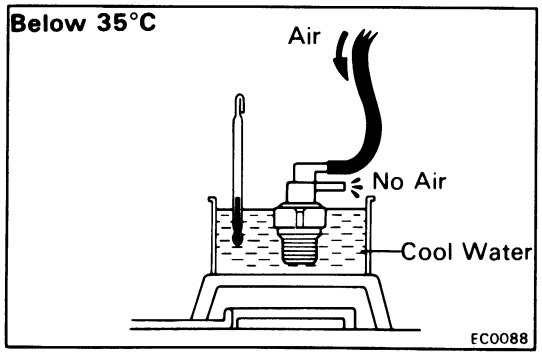

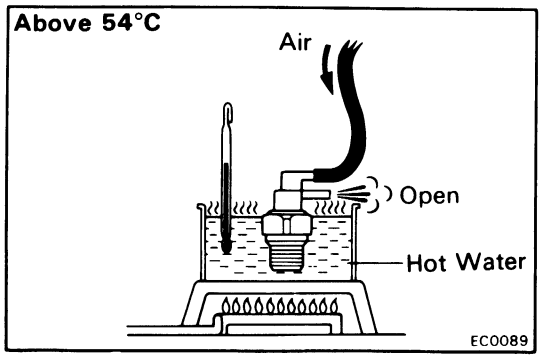

INSPECTION OF BVSV

CHECK BVSV BY BLOWING AIR INTO PIPE

(a) Drain the coolant from the cylinder block into a suitable container.

(b) Remove the BVSV.

(c) Cool the BVSV to below 35°C (95°F) with cool water.

(d) Blow air into a pipe and check that the BVSV is closed.

(e) Heat the BVSV to above 54°C (129°F) with hot water.

(f) Blow air into a pipe and check that the BVSV is open.

If a problem is found, replace the BVSV.

(g) Apply liquid sealer to the threads of the BVSV and reinstall.

(h) Fill the cylinder block with coolant.

DASH POT (DP) SYSTEM (4A-GE only)

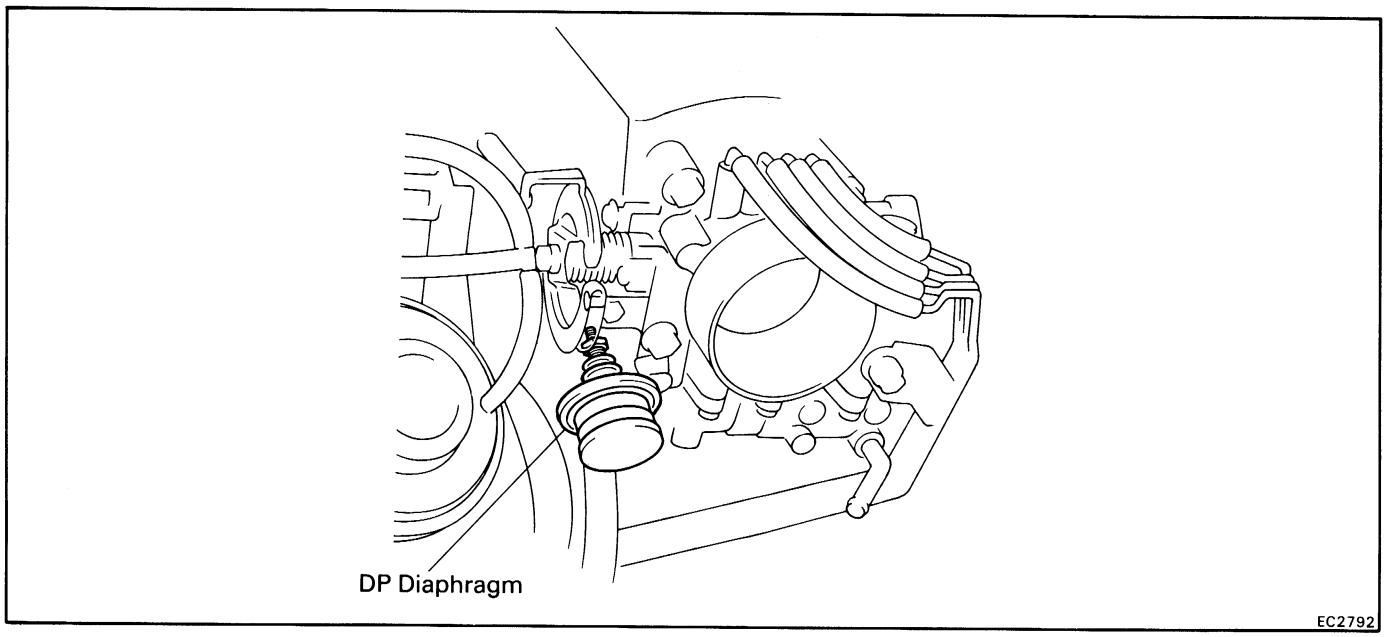

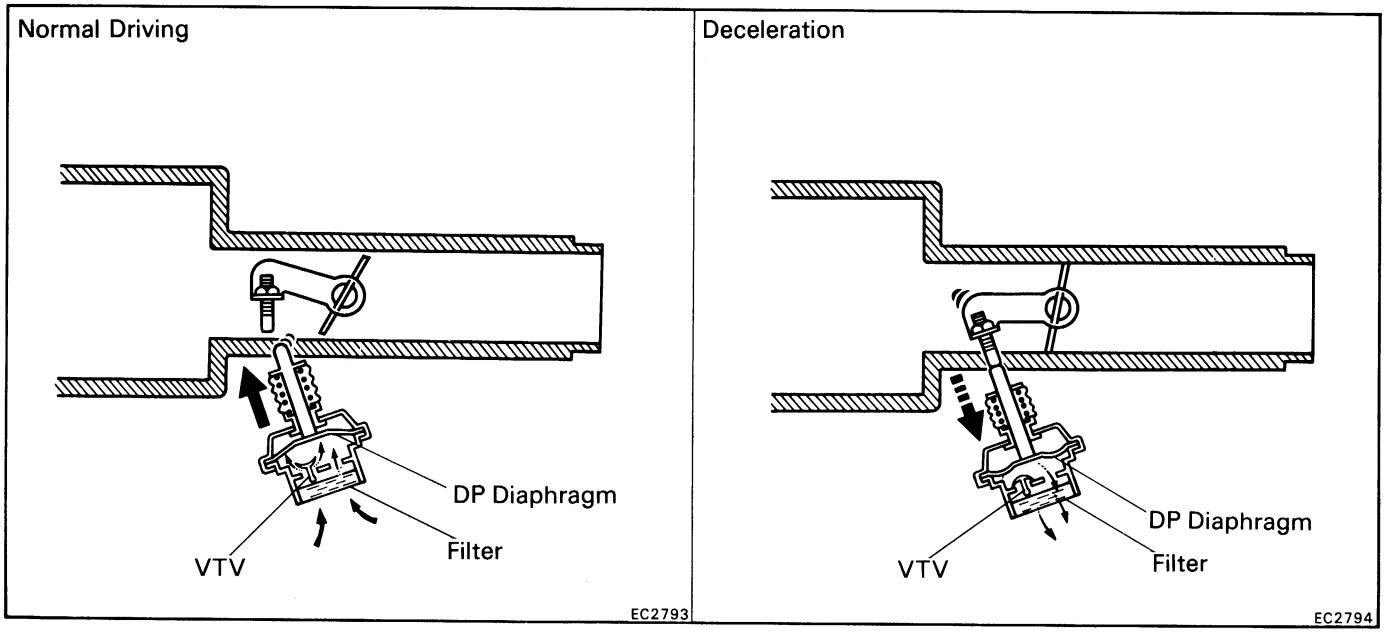

To reduce HC and CO emissions, when decelerating the dash pot opens the throttle valve slightly more than at idle. This causes the air-fuel mixture to burn completely.

Condition	Diaphragm	VTV	Throttle Valve
Idling	Pushed in by return force of throttle valve	CLOSED	Idle speed position
Normal driving	Pushed out by diaphragm spring	OPEN	High speed position
Deceleration	Pushed in by return force of throttle valve	CLOSED	Slightly opens and then slowly closes to idle position

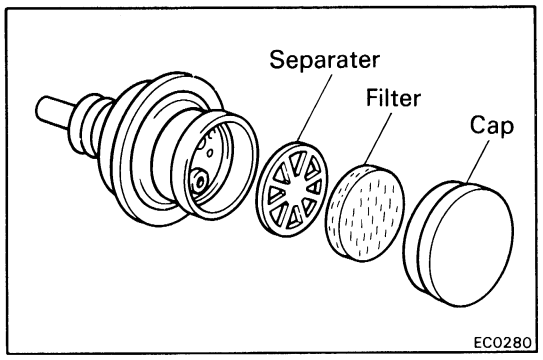

INSPECTION OF DP SYSTEM

1. WARM UP AND STOP ENGINE

Allow the engine to reach normal operating temperature.

2. CHECK IDLING SPEED AND ADJUST, IF NECESSARY

3. REMOVE CAP, FILTER AND SEPARATER FROM DP

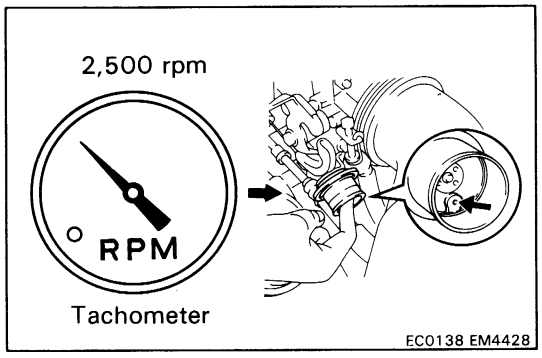

4. CHECK DP SETTING SPEED

(a) Race the engine at 2,500 rpm for a few seconds.

(b) Plug the VTV hole with your finger.

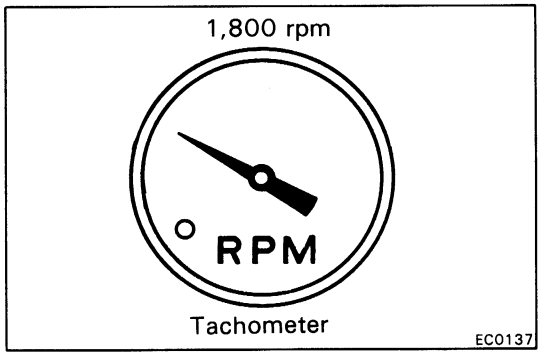

(c) Release the throttle valve.

(d) Check that the DP is set.

DP setting speed: 1,800 rpm (w/ Cooling fan OFF)

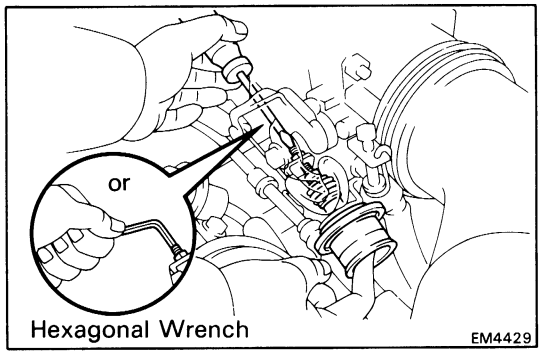

If not at specified, adjust with the DP adjusting screw.

5. REINSTALL DP SEPARATER, FILTER AND CAP

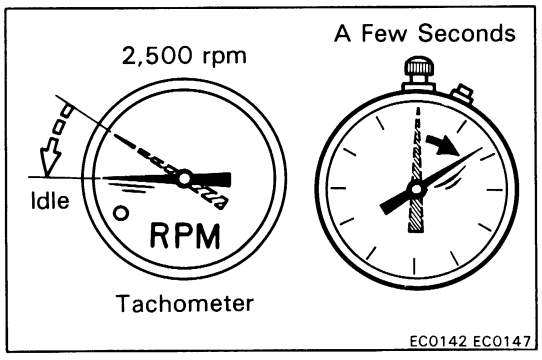

6. CHECK VTV OPERATION

Race the engine at 2,500 rpm for a few seconds, release the throttle valve and check that the engine returns to idle in a few seconds.

EXHAUST GAS RECIRCULATION (EGR) SYSTEM (4A-GE)

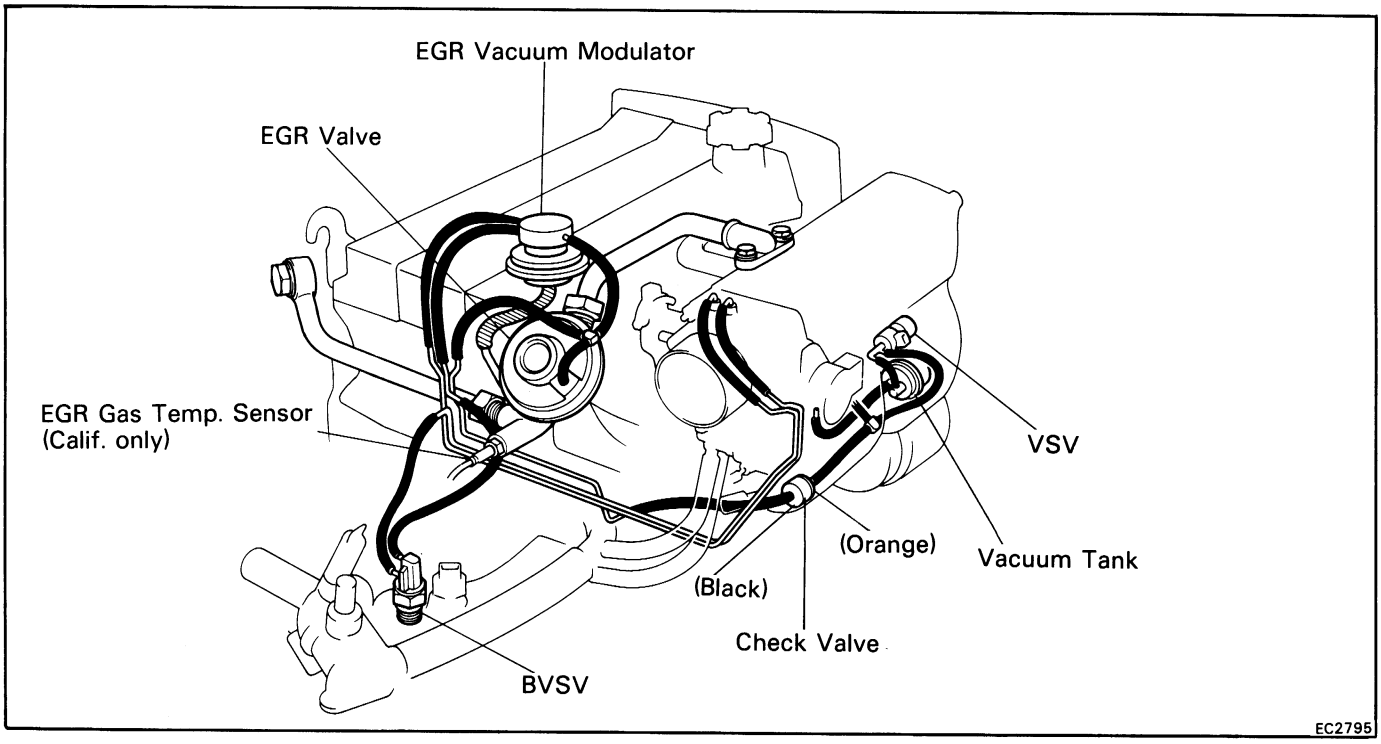

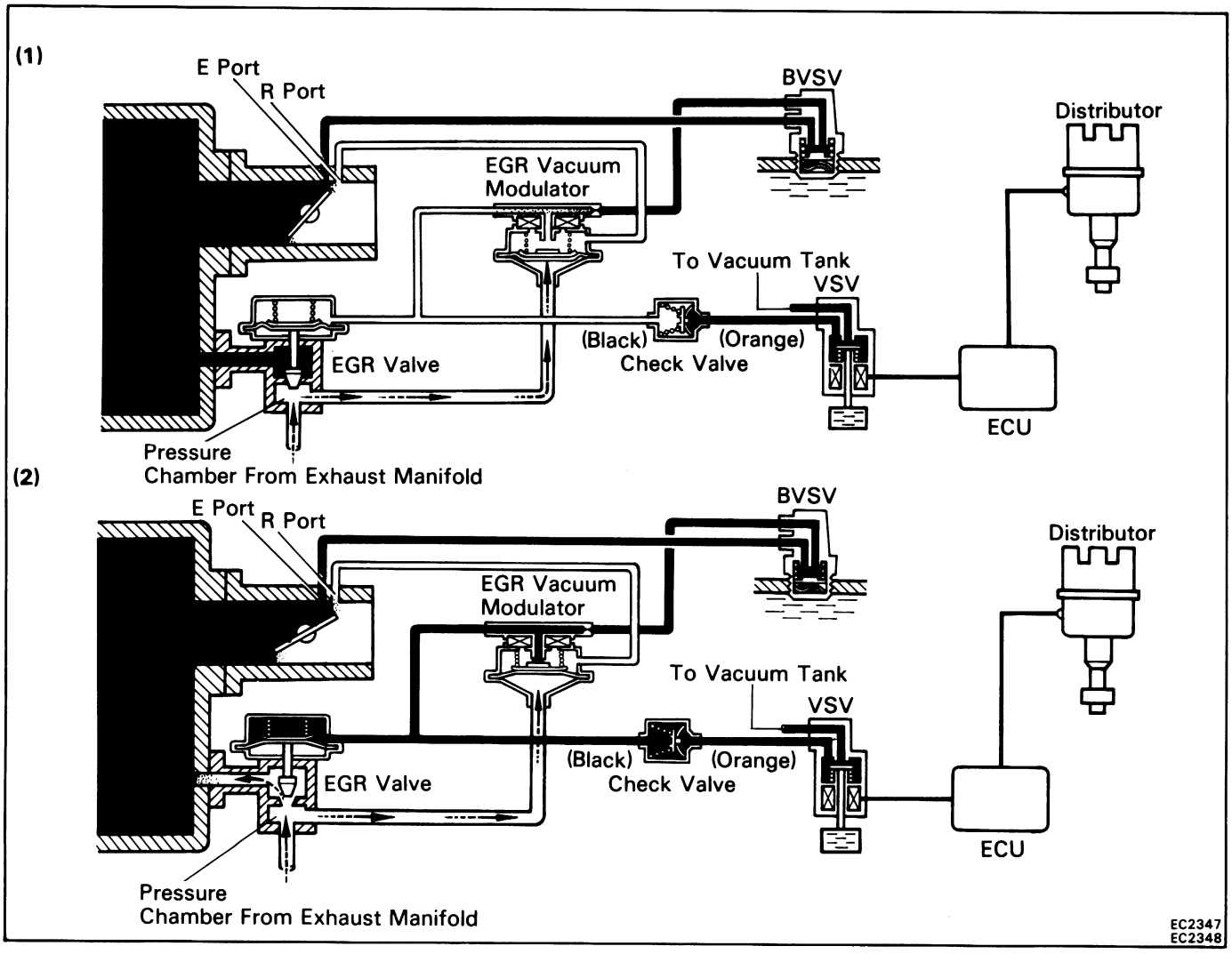

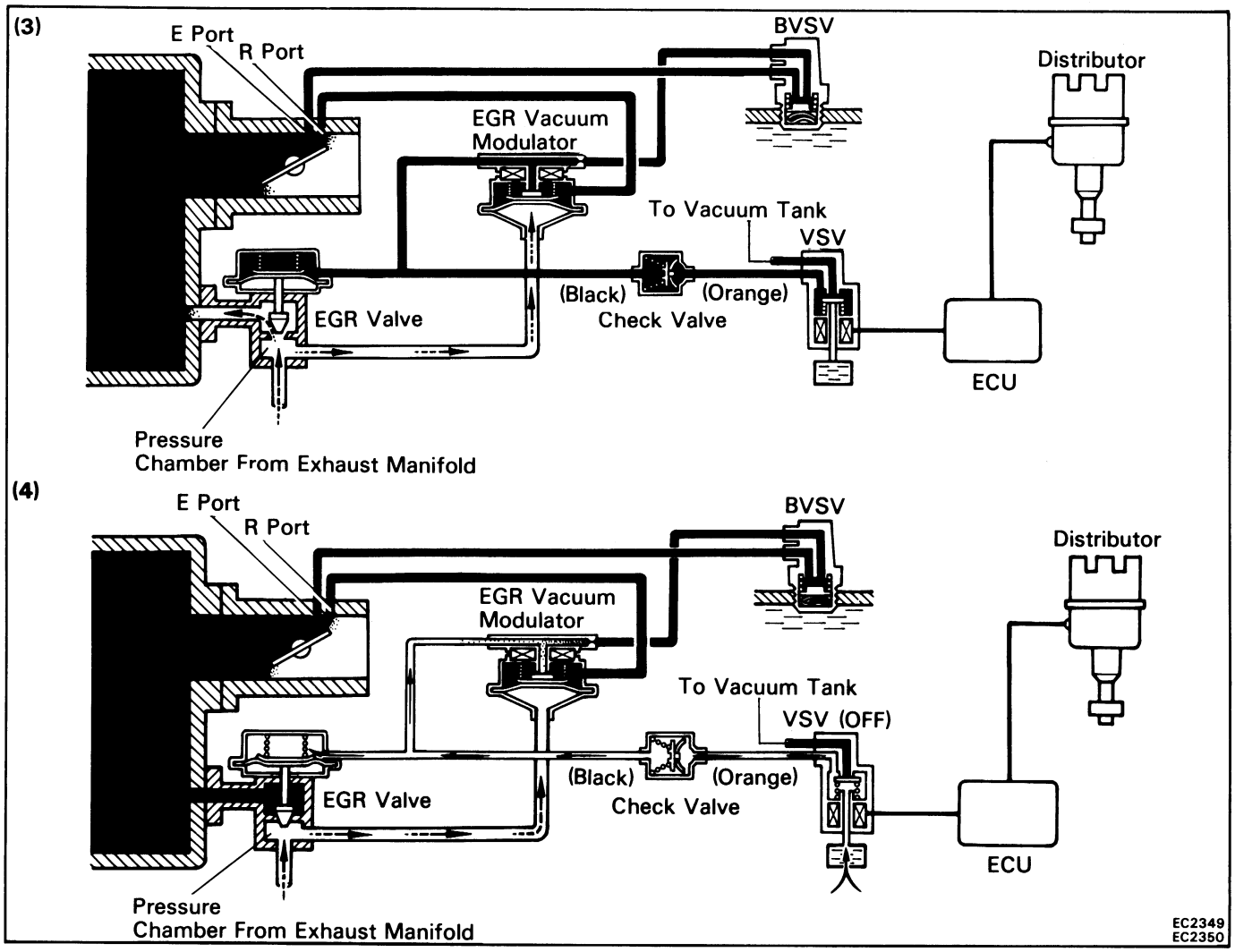

To reduce NOx emissions, part of the exhaust gases are recirculated through the EGR valve to the intake manifold to lower the maximum combustion temperature.

Coolant Temp.	BVSV	ENGINE rpm	VSV	Throttle Valve Opening Angle	Pressure in the EGR Valve Pressure Chamber		EGR Vacuum Modulator	EGR Valve	Exhaust Gas
Below 35°C (95°F)	CLOSED	—	—	—	—		—	CLOSED	Not recirculated
Above 54°C (129°F)	OPEN	Below 4,350 rpm	ON	Positioned below E port	—		—	CLOSED	Not recirculated
				Positioned between E port and R port	(1) LOW	*Pressure constantly alternating between low and high	OPENS passage to atmosphere	CLOSED	Not recirculated
					(2) HIGH		CLOSES passage to atmosphere	OPEN	Recirculated
				Positioned above R port	(3) HIGH	**	CLOSES passage to atmosphere	OPEN	Recirculated (increase)
		Above 4,350 rpm	(4) OFF	—	—		—	CLOSED	Not recirculated

* Pressure increase → Modulator closes → EGR valve opens → Pressure drops → EGR valve closes → Modulator opens →

** When the throttle valve is positioned above the R port, the EGR vacuum modulator will close the atmosphere passage and open the EGR valve to increase the EGR gas, even if the exhaust pressure is insufficiently low.

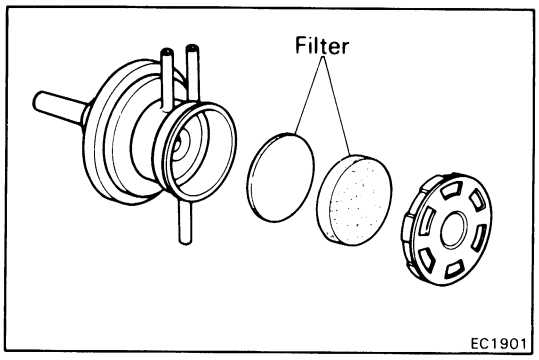

INSPECTION OF EGR SYSTEM

1. CHECK AND CLEAN FILTERS IN EGR VACUUM MODULATOR

(a) Check the filter for contamination or damage.

(b) Using compressed air, clean the filters.

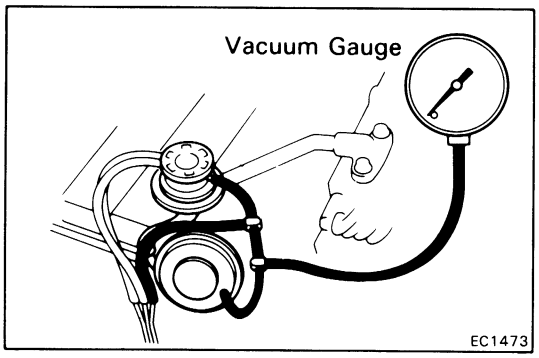

2. PREPARATION

Using a 3-way connector, connect a vacuum gauge to the hose between the EGR valve and EGR vacuum modulator.

3. CHECK SEATING OF EGR VALVE

Start the engine and check that the engine starts and runs at idle.

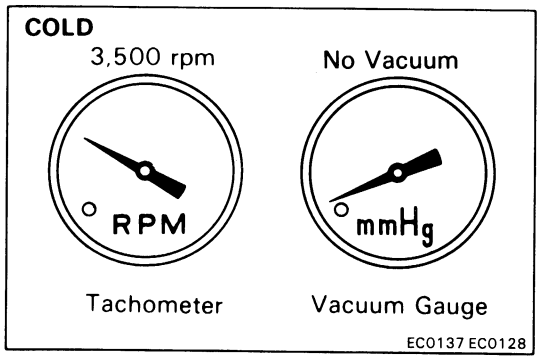

4. CHECK BVSV WITH COLD ENGINE

(a) The coolant temperature should be below 35°C (95°F).

(b) Check that the vacuum gauge indicates zero at 3,500 rpm.

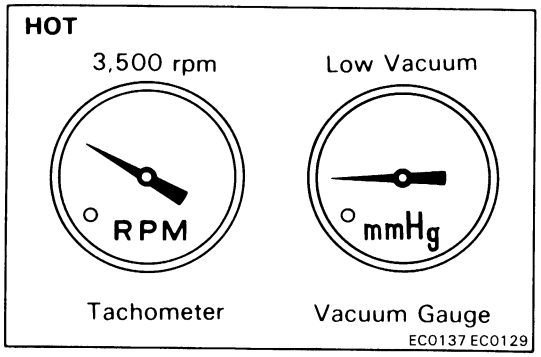

5. CHECK BVSV, VSV AND EGR VACUUM MODULATOR WITH HOT ENGINE

(a) Warm up the engine.

(b) Check that the vacuum gauge indicates low vacuum at 3,500 rpm.

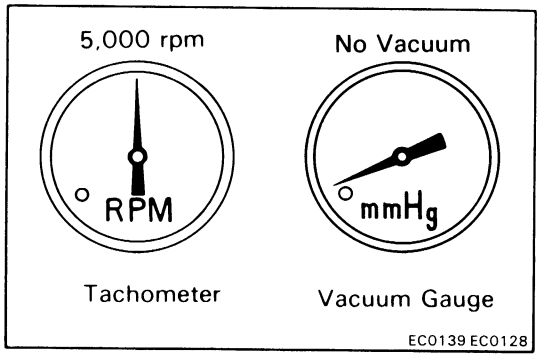

(c) Check that the vacuum gauge indication is zero at 5,000 rpm.

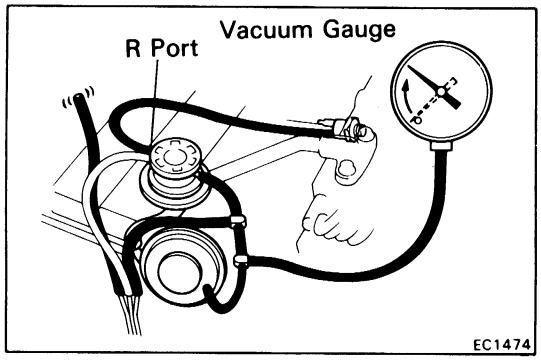

(d) Disconnect the vacuum hose from R port of the EGR vacuum modulator and connect R port directly to the intake manifold with another hose.

(e) Check that the vacuum gauge indicates high vacuum at 3,500 rpm.

NOTE: As a large amount of EGR gas enters, the engine will misfire slightly.

(f) Disconnect the vacuum gauge and reconnect the vacuum hoses to the proper locations.

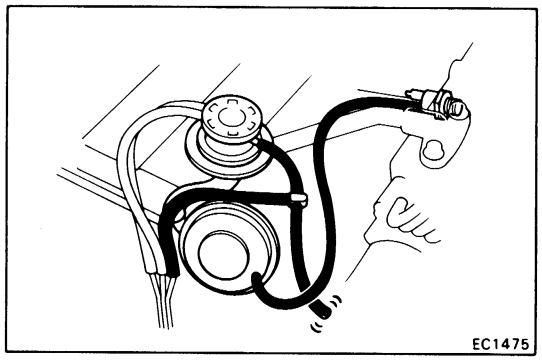

6. CHECK EGR VALVE

(a) Apply vacuum directly to the EGR valve with the engine idling.

(b) Check that the engine runs rough or dies.

(c) Reconnect the vacuum hoses to the proper location.

IF NO PROBLEM IS FOUND WITH THIS INSPECTION, THE SYSTEM IS OKAY; OTHERWISE INSPECT EACH PART

INSPECTION OF EGR VALVE

1. REMOVE EGR VALVE

Check the valve for sticking and heavy carbon deposits. If a problem is found, replace it.

2. REINSTALL EGR VALVE WITH A NEW GASKET

INSPECTION OF EGR VACUUM MODULATOR

CHECK EGR VACUUM MODULATOR OPERATION

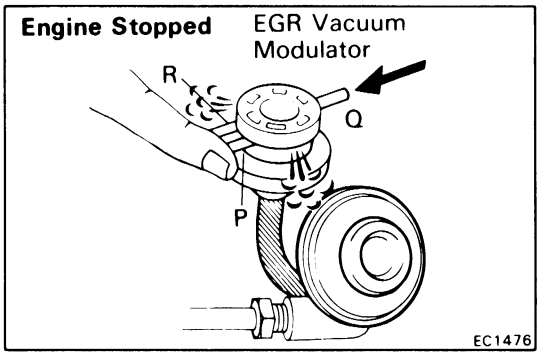

(a) Disconnect the vacuum hoses from ports P, Q and R of the EGR vacuum modulator.

(b) Block ports P and R with your finger.

(c) Blow air into port Q. Check that the air passes through to the air filter side freely.

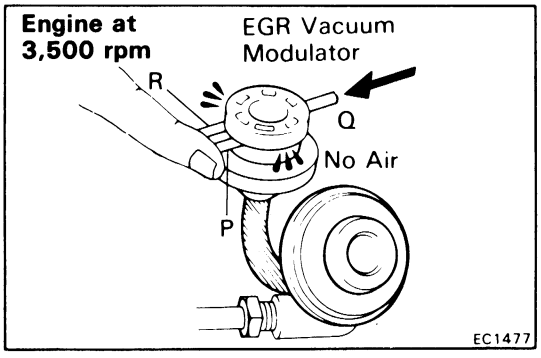

(d) Start the engine and maintain an engine speed of 3,500 rpm.

(e) Repeat the above test. Check that there is a strong resistance to air flow.

(f) Reconnect the vacuum hoses to the proper locations.

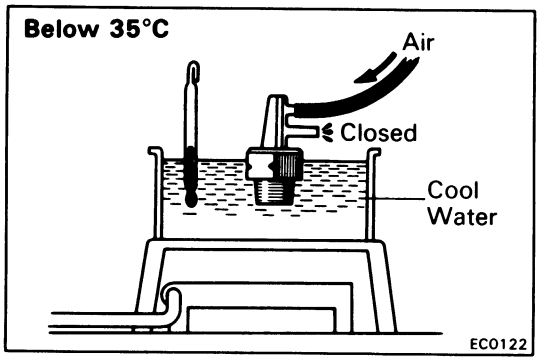

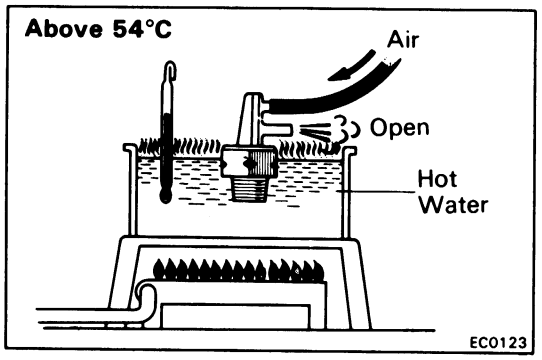

INSPECTION OF BVSV

CHECK BVSV BY BLOWING AIR INTO PIPE

(a) Drain the coolant from the cylinder block into a suitable container.

(b) Remove the BVSV.

(c) Cool the BVSV to below 35°C (95°F) with cool water.

(d) Blow air into the pipe and check that the BVSV is closed.

(e) Heat the BVSV to above 54°C (129°F) with hot water.

(f) Blow air into the pipe and check that the BVSV is open.

If a problem is found, replace the BVSV.

(g) Apply liquid sealer to the threads of the BVSV and reinstall.

(h) Fill the cylinder block with coolant.

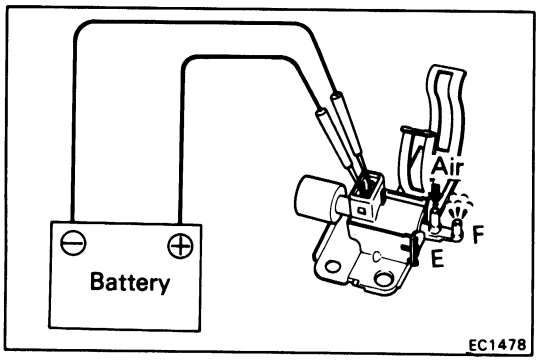

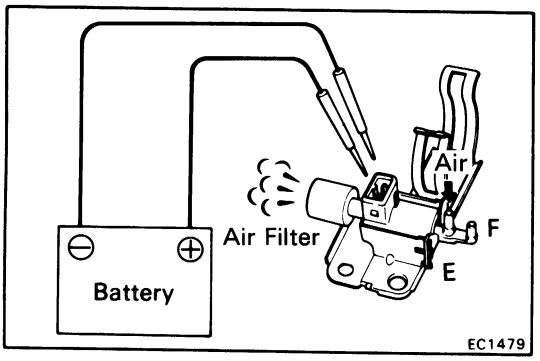

INSPECTION OF VSV

1. CHECK VACUUM CIRCUIT CONTINUITY IN VSV BY BLOWING AIR INTO PIPE

(a) Connect the VSV terminals to the battery terminals as illustrated.

(b) Blow into pipe E and check that air comes out of pipe F.

(c) Disconnect the battery.

(d) Blow into pipe E and check that air comes out of air filter.

If a problem is found, repair or replace the VSV.

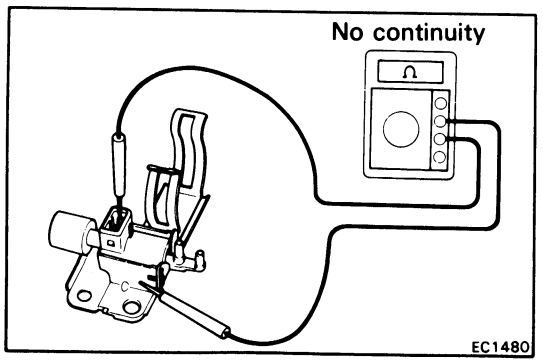

2. CHECK FOR SHORT CIRCUIT

Using an ohmmeter, check that there is no continuity between the terminal and the VSV body.

If there is continuity, replace the VSV.

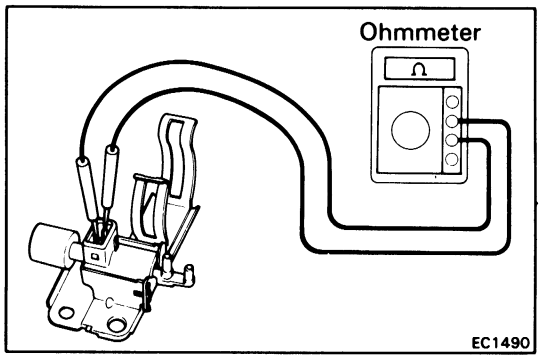

3. CHECK FOR OPEN CIRCUIT

Using an ohmmeter, measure the resistance between the terminals as shown.

Specified resistance: 33 – 39 Ω at 20°C (68°F)

If resistance is not within specification, replace the VSV.

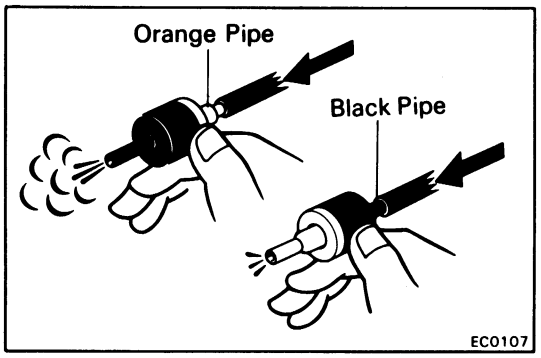

INSPECTION OF CHECK VALVE

CHECK VALVE BY BLOWING AIR INTO EACH PIPE

(a) Check that air flows from the orange pipe to the black pipe.

(b) Check that air does not flow from the black pipe to the orange pipe.

If a problem is found, replace the check valve.

EXHAUST GAS RECIRCULATION (EGR) SYSTEM (4A-GZE)

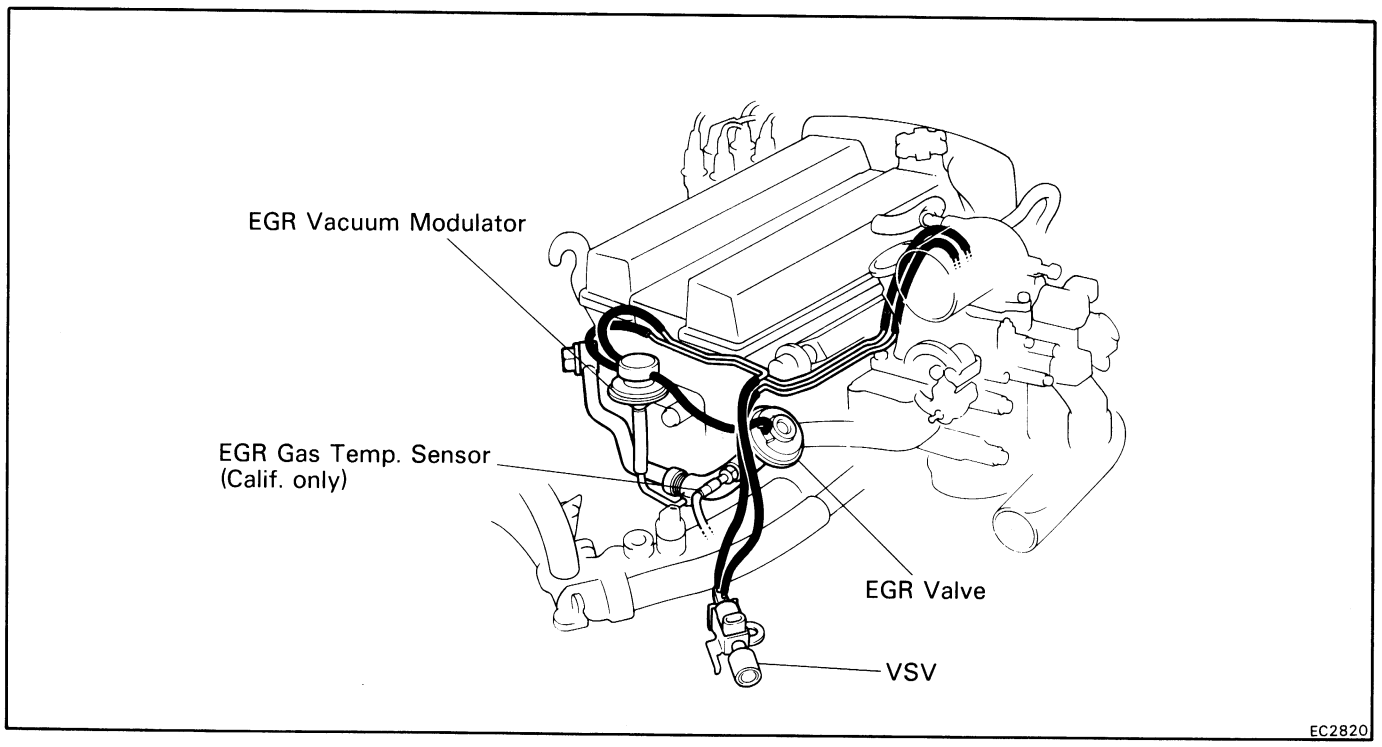

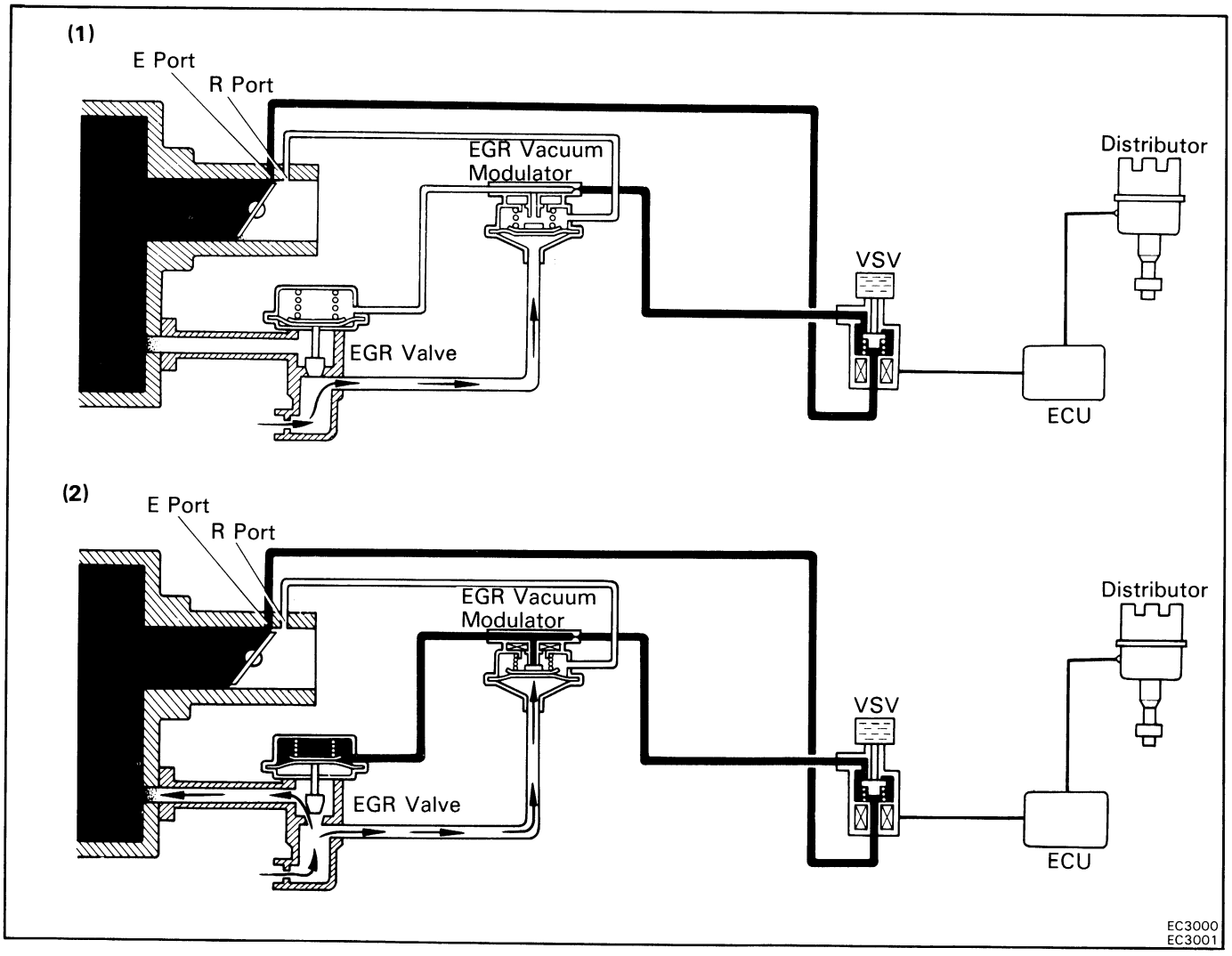

(3)

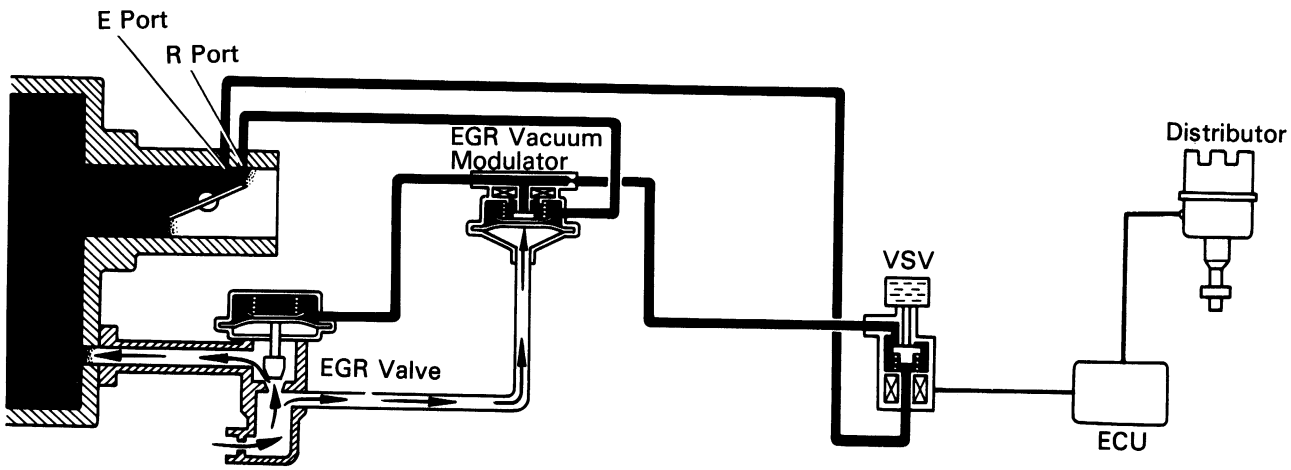

EC3002

To reduce NOx emissions, part of the exhaust gases are recirculated through the EGR valve to the intake manifold to lower the maximum combustion temperature.

Coolant Temp.	Engine RPM	Intake Air Volume	VSV	Throttle Valve Opening Angle	Pressure in the EGR Valve Pressure Chamber		EGR Vacuum Modulator	EGR Valve	Exhaust Gas
M/T Below 44°C (111°F) A/T Below 35°C (95°F)	———	—	OFF	—	—		—	CLOSED	Not recirculated
M/T Above 50°C (122°F) A/T Above 40°C (104°F)	Above 4,200 rpm	—	OFF	—	—		—	CLOSED	Not recirculated
	Blow 3,800 rpm	LOW	OFF	—	—		—	CLOSED	Not recirculated
		HIGH	ON	Positioned below E port	—		—	CLOSED	Not recirculated
				Positioned between E port and R port	(1) LOW	*Pressure constantly alternating between low and high	OPENS passage to atmosphere	CLOSED	Not recirculated
					(2) HIGH		CLOSES passage to atmosphere	OPEN	Recirculated
				Positioned above R port	(3) HIGH	**	CLOSES passage to atmosphere	OPEN	Recirculated (increase)

* Pressure increase → Modulator closes → EGR valve opens → Pressure drops → EGR valve closes → Modulator opens →

** When the throttle valve is positioned above the R port, the EGR vacuum modulator will close the atmosphere passage and open the EGR valve to increase the EGR gas, even if the exhaust pressure is insufficiently low.

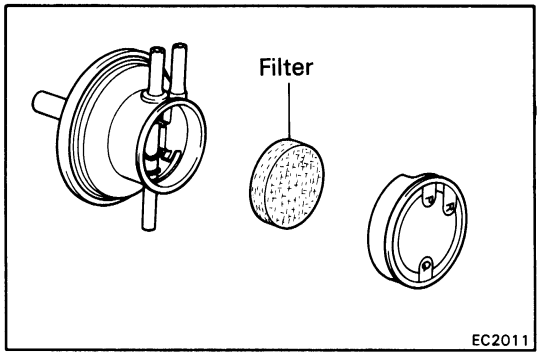

INSPECTION OF EGR SYSTEM

1. CHECK AND CLEAN FILTER IN EGR VACUUM MODULATOR

(a) Check the filter for contamination or damage.

(b) Using compressed air, clean the filter.

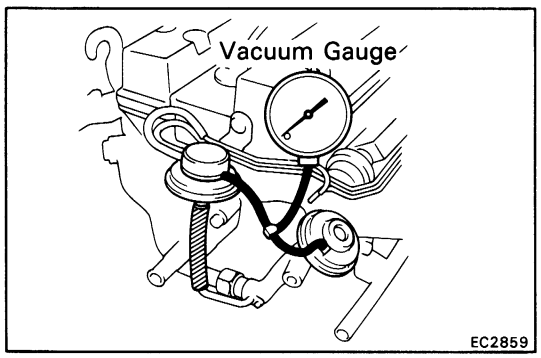

2. PREPARATION

Using a 3-way connector, connect a vacuum gauge to the hose between the EGR valve and EGR vacuum modulator.

3. CHECK SEATING OF EGR VALVE

Start the engine and check that the engine starts and runs at idle.

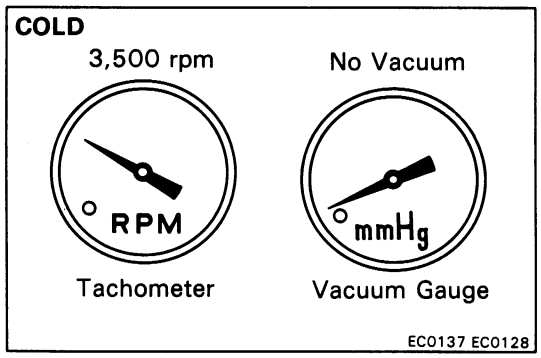

4. CHECK VSV WITH COLD ENGINE

(a) (M/T)
The coolant temperature should be below 44°C (111°F).

(b) (A/T)
The coolant temperature should be below 35°C (95°F).

(c) Check that the vacuum gauge indicates zero at 3,500 rpm.

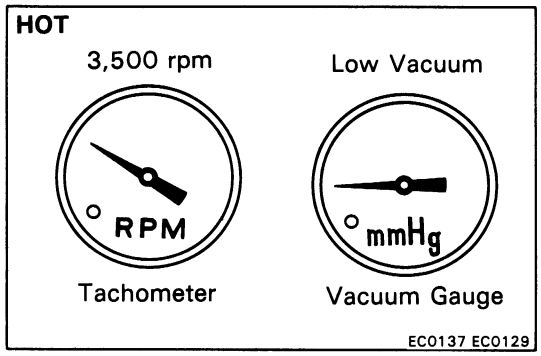

5. CHECK VSV AND EGR VACUUM MODULATOR WITH HOT ENGINE

(a) Warm up the engine.

(b) Check that the vacuum gauge indicates low vacuum at 3,500 rpm.

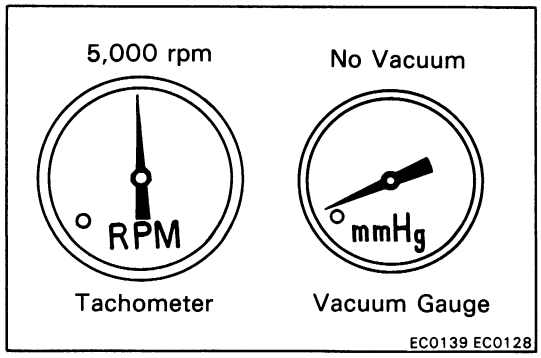

(c) Check that the vacuum gauge indication is zero at 5,000 rpm.

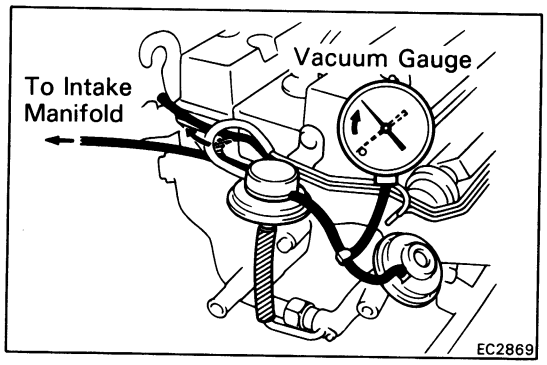

(d) Disconnect the vacuum hose from R port of the EGR vacuum modulator and connect R port directly to the intake manifold with another hose.

(e) Check that the vacuum gauge indicates high vacuum at 3,500 rpm.

NOTE: As a large amount of EGR gas enters, the engine will misfire slightly.

(f) Disconnect the vacuum gauge and reconnect the vacuum hoses to the proper locations.

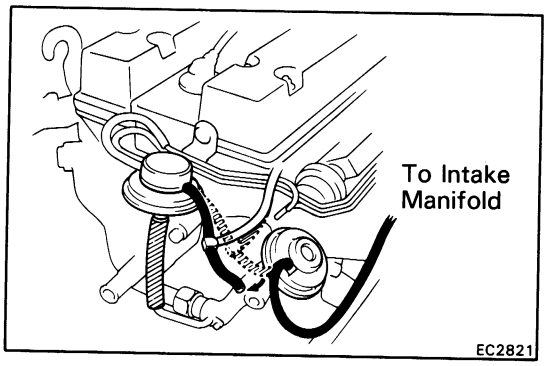

6. CHECK EGR VALVE

(a) Apply vacuum directly to the EGR valve with the engine idling.

(b) Check that the engine runs rough or dies.

(c) Reconnect the vacuum hoses to the proper location.

IF NO PROBLEM IS FOUND WITH THIS INSPECTION, THE SYSTEM IS OKAY; OTHERWISE INSPECT EACH PART

INSPECTION OF EGR VALVE

1. REMOVE EGR VALVE

Check the valve for sticking and heavy carbon deposits. If a problem is found, replace it.

2. REINSTALL EGR VALVE WITH A NEW GASKET

INSPECTION OF EGR VACUUM MODULATOR

CHECK EGR VACUUM MODULATOR OPERATION

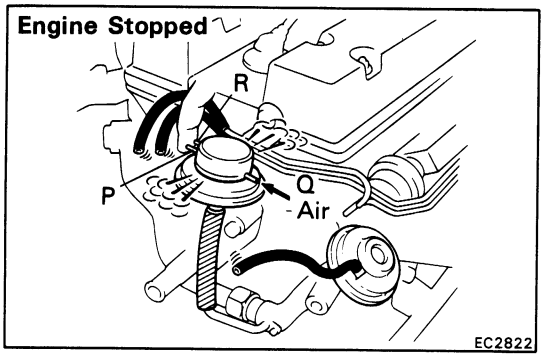

(a) Disconnect the vacuum hoses from ports P, Q and R of the EGR vacuum modulator.

(b) Block ports P and R with your finger.

(c) Blow air into port Q. Check that the air passes through to the air filter side freely.

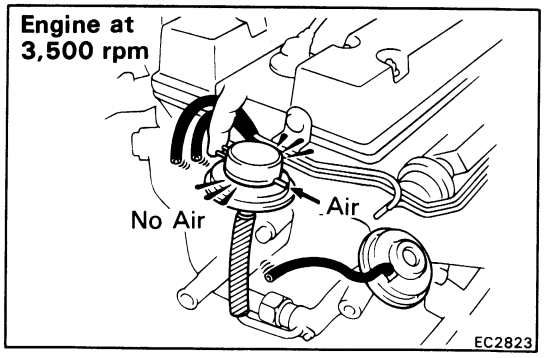

(d) Start the engine and maintain an engine speed of 3,500 rpm.

(e) Repeat the above test. Check that there is a strong resistance to air flow.

(f) Reconnect the vacuum hoses to the proper locations.

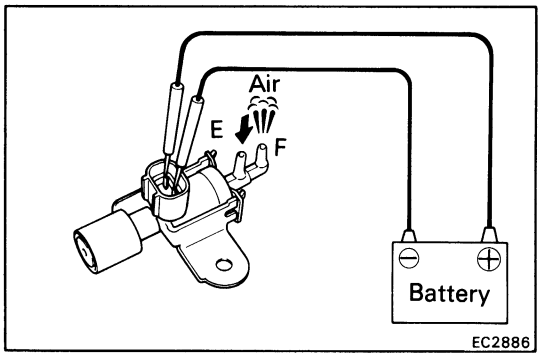

INSPECTION OF VSV

1. CHECK VACUUM CIRCUIT CONTINUITY IN VSV BY BLOWING AIR INTO PIPE

(a) Connect the VSV terminals to the battery terminals as illustrated.

(b) Blow into pipe E and check that air comes out of pipe F.

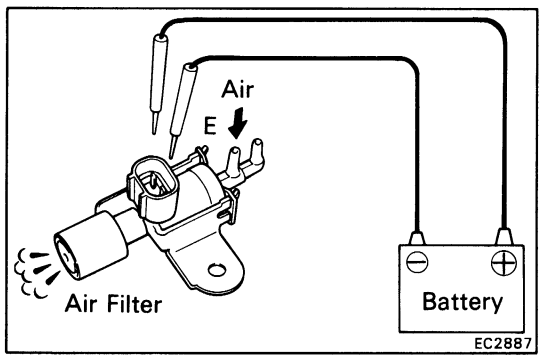

(c) Disconnect the battery.

(d) Blow into pipe E and check that air comes out of air filter.

If a problem is found, repair or replace the VSV.

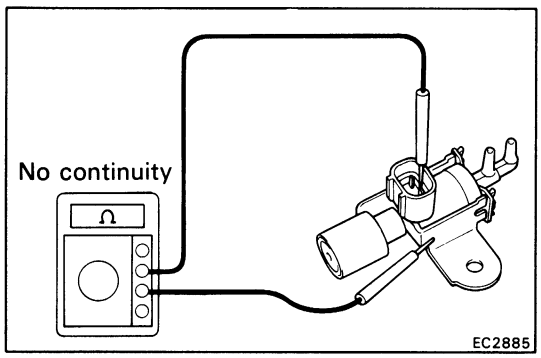

2. CHECK FOR SHORT CIRCUIT

Using an ohmmeter, check that there is no continuity between the terminal and the VSV body.

If there is continuity, replace the VSV.

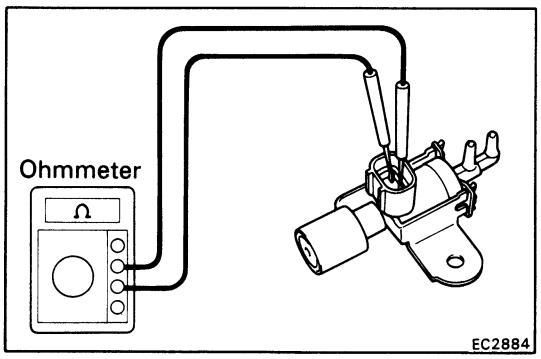

3. CHECK FOR OPEN CIRCUIT

Using an ohmmeter, measure the resistance between the terminals as shown.

Specified resistance: 33 – 39 Ω at 20°C (68°F)

If resistance is not within specification, replace the VSV.

INSPECTION OF WATER TEMPERATURE SENSOR

(See page FI-116)

INSPECTION OF AIR FLOW METER

(See page FI-94)

THREE-WAY CATALYST (TWC) SYSTEM

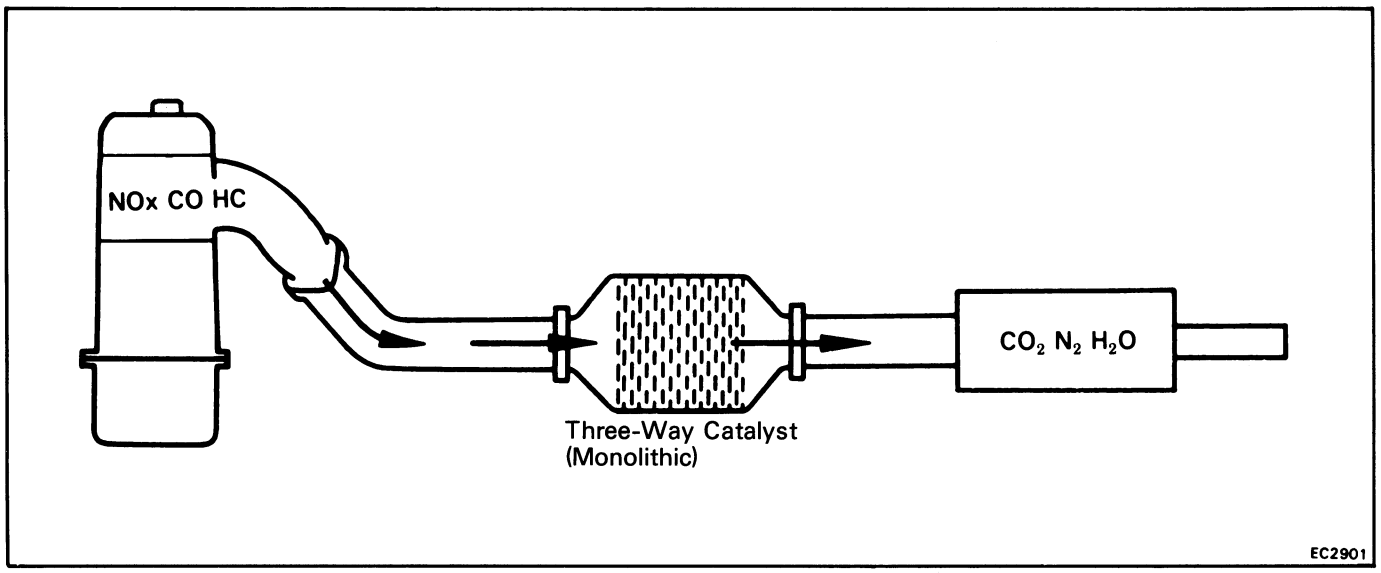

To reduce HC, CO and NOx emissions, they are oxidized, reduced and converted to nitrogen (N_2), carbon dioxide (CO_2) and water (H_2O) by the catalyst.

Exhaust port		TWC		Exhaust Gas
HC, CO, AND NOx	→	OXIDATION AND REDUCTION	→	CO_2 H_2O N_2

INSPECTION OF EXHAUST PIPE ASSEMBLY

1. **CHECK CONNECTIONS FOR LOOSENESS OR DAMAGE**
2. **CHECK CLAMPS FOR WEAKNESS, CRACKS OR DAMAGE**

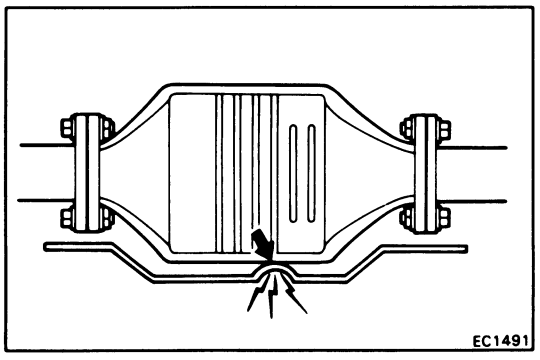

INSPECTION OF CATALYTIC CONVERTER

CHECK FOR DENTS OR DAMAGE

If any part of protector is damaged or dented to the extent that it contacts the catalyst, repair or replace.

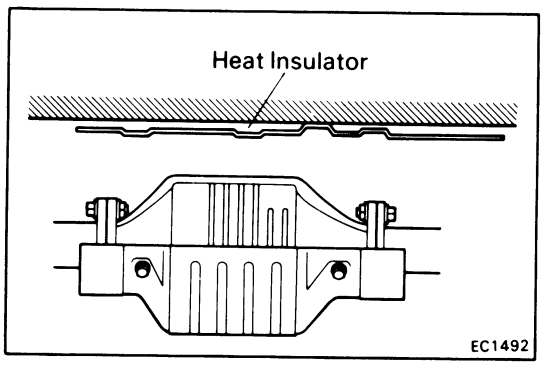

INSPECTION OF HEAT INSULATOR

1. **CHECK HEAT INSULATOR FOR DAMAGE**
2. **CHECK FOR ADEQUATE CLEARANCE BETWEEN CATALYTIC CONVERTER AND HEAT INSULATOR**

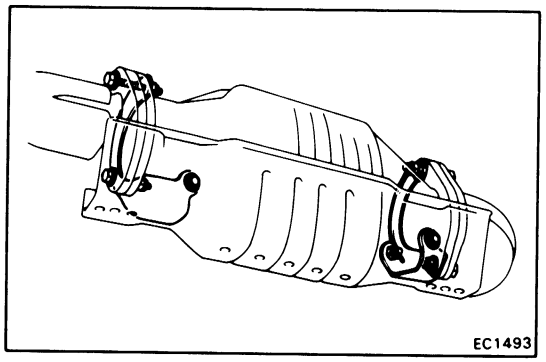

REPLACEMENT OF CATALYTIC CONVERTER

1. **REMOVE CONVERTER**
   (a) Jack up the vehicle.
   (b) Check that the converter is cool.
   (c) Remove the converter protector.
   (d) Remove the bolts at the front and rear of the converter.
   (e) Remove the converter and gaskets.
2. **INSTALL CONVERTER**
   (a) Place new gaskets on the front and rear exhaust pipes, and connect the converter to the exhaust pipes.
   (b) Install the converter protector.
   (c) Tighten the bolts.

   Torque: Catalyst — Exhaust pipe
   440 kg-cm (32 ft-lb, 43 N·m)
   Protector — Bracket
   195 kg-cm (14 ft-lb, 19 N·m)

   (d) Reinstall the bracket bolts and tighten them.

EFI SYSTEM

	Page
DESCRIPTION	FI-2
PRECAUTIONS	FI-5
INSPECTION PRECAUTIONS	FI-5
TROUBLESHOOTING	FI-9
DIAGNOSIS SYSTEM	FI-21
TROUBLESHOOTING WITH VOLT/ OHMMETER (4A-GE)	FI-29
TROUBLESHOOTING WITH VOLT/ OHMMETER (4A-GZE)	FI-31
TROUBLESHOOTING EFI ELECTRONIC CIRCUIT WITH VOLT/OHMMETER (4A-GE)	FI-33
TROUBLESHOOTING EFI ELECTRONIC CIRCUIT WITH VOLT/OHMMETER (4A-GZE)	FI-48
FUEL SYSTEM	FI-64
Fuel Pump	FI-64
Cold Start Injector	FI-73
Pressure Regulator (4A-GE)	FI-78
Pressure Regulator (4A-GZE)	FI-79
Injector	FI-80
Fuel Tank and Line	FI-93
AIR INDUCTION SYSTEM	FI-94
Air Flow Meter	FI-94
Throttle Body	FI-97
Idle Speed Control (ISC) Valve (4A-GZE)	FI-106
Auxiliary Air Valve (4A-GE)	FI-108
ELECTRONIC CONTROL SYSTEM	FI-109
Location of Electronic Control Parts	FI-109
EFI Main Relay	FI-110
Circuit Opening Relay	FI-111
Solenoid Resistor (4A-GZE) and Injector Relay	FI-113
Start Injector Time Switch	FI-115
Water Temperature Sensor	FI-116
EGR Gas Temperature Sensor (For California)	FI-117
High Temperature Line Pressure Up System	FI-118
Idle-up System	FI-119
Oxygen Sensor	FI-120
Electronic Controlled Unit (ECU)	FI-123
Fuel Cut RPM	FI-128

DESCRIPTION

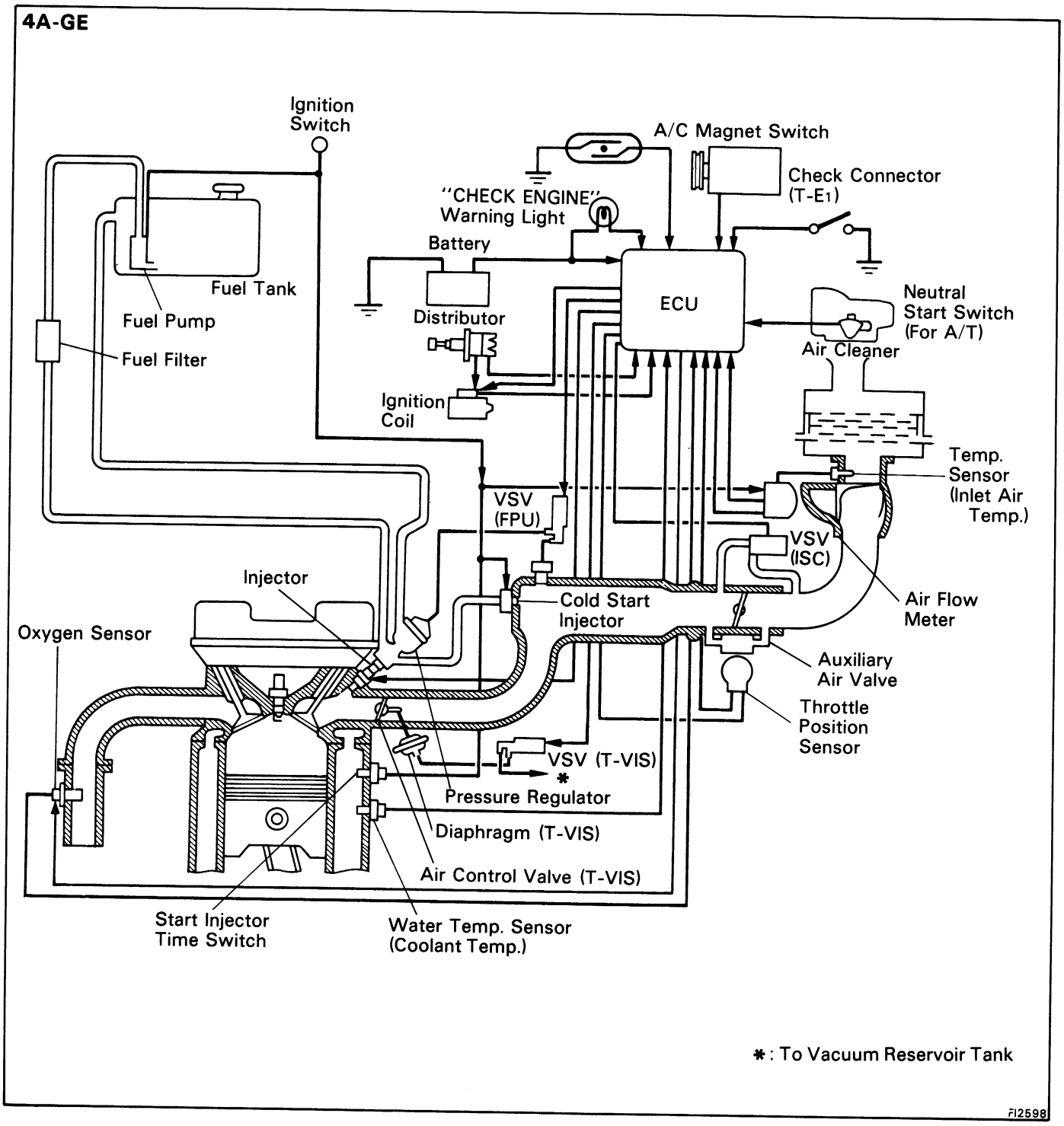

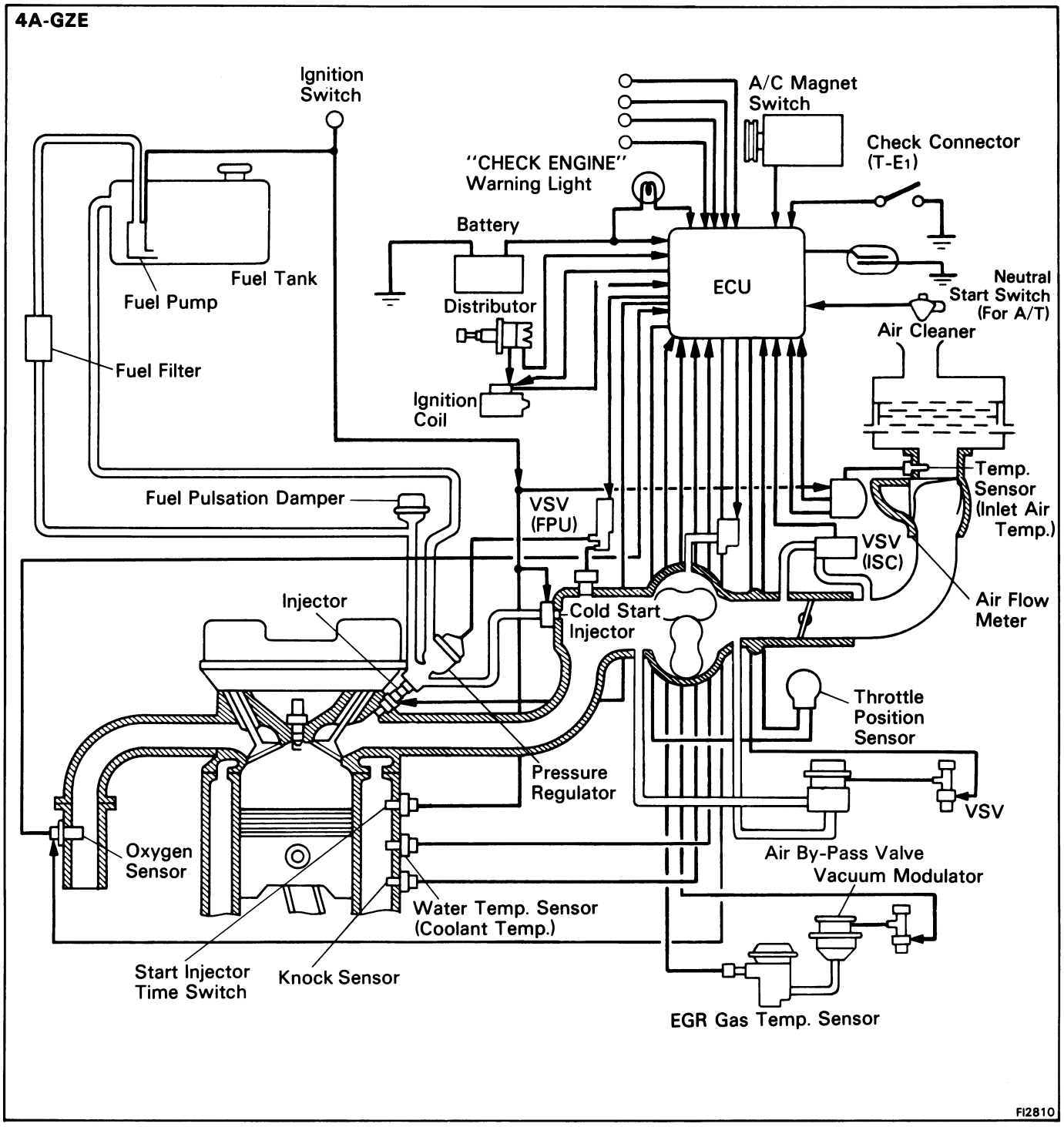
4A-GZE
Ignition Switch
A/C Magnet Switch
Check Connector (T-E1)
"CHECK ENGINE" Warning Light
Battery
ECU
Fuel Tank
Fuel Pump
Distributor
Neutral Start Switch (For A/T)
Air Cleaner
Fuel Filter
Ignition Coil
Temp. Sensor (Inlet Air Temp.)
Fuel Pulsation Damper
VSV (FPU)
VSV (ISC)
Injector
Cold Start Injector
Air Flow Meter
Throttle Position Sensor
Pressure Regulator
VSV
Oxygen Sensor
Air By-Pass Valve
Vacuum Modulator
Water Temp. Sensor (Coolant Temp.)
Start Injector Time Switch
Knock Sensor
EGR Gas Temp. Sensor
FI2810

The EFI system is composed of 3 basic subsystems; Fuel, Air Induction and Electronic Control Systems.

FUEL SYSTEM

An electric fuel pump supplies sufficient fuel, under a constant pressure, to the injectors. These injectors inject a metered quantity of fuel into the intake manifold in accordance with signals from the ECU (Electronic Control Unit).

AIR INDUCTION SYSTEM

The air induction system provides sufficient air for engine operation.

ELECTRONIC CONTROL SYSTEM

The 4A-GE and 4A-GZE engine is equipped with a Toyota Computer Control System (TCCS) which centrally controls the EFI, ESA, Diagnosis systems, etc. by means of an Electronic Control Unit (ECU – formerly EFI computer) employing a microcomputer.

By the ECU, the TCCS controls the following functions:

1. Electronic Fuel Injection (EFI)

   The ECU receives signals from various sensors indicating changing engine operating conditions such as:

   Intake air volume
   Intake air temperature
   Coolant temperature
   Engine rpm
   Acceleration/deceleration
   Exhaust oxygen content etc,

   These signals are utilized by the ECU to determine the injection duration necessary for an optimum air-fuel ratio.

2. Electronic Spark Advance (ESA)

   The ECU is programmed with data for optimum ignition timing under any and all operating conditions. Using data provided by sensors which monitor various engine functions (rpm, A/C signal, coolant temperature, etc.), the microcomputer (ECU) triggers the spark at precisely the right instant. (See IG section)

3. Diagnosis

   The ECU detects any malfunctions or abnormalties in the sensor network and lights a "CHECK ENGINE" warning light on the instrument panel. At the same time, the trouble is identified and a diagnostic code is recorded by the ECU. The diagnostic code can be read by the number of blinks of the "CHECK ENGINE" warning light when terminals T and E_1 are short-circuited. There are 13 (Calif.) or 14 (Ex. Calif.) different diagnostic codes, including "normal operation."
   (See pages FI-24 to 27)

4. Fail-Safe Function

   In the event of a sensor malfunction, a back-up circuit will take over to provide minimal drivability. Simultaneously the "CHECK ENGINE" warning light is activated.

PRECAUTIONS

1. **Before working on the fuel system, disconnect the negative terminal from the battery.**

   NOTE: Any diagnosis code retained by the computer will be erased when the battery terminal is removed. Therefore read the diagnosis before removing the battery terminal.

2. **Do not smoke or work near an open flame when working on the fuel system.**

3. **Keep gasoline off rubber or leather parts.**

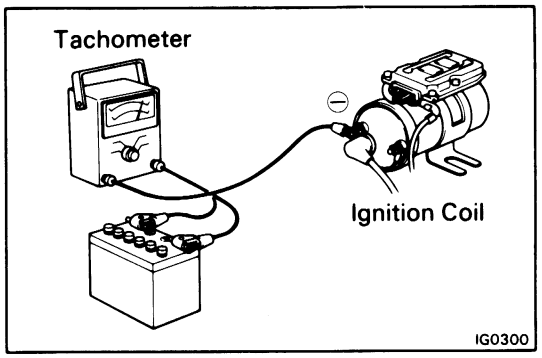

INSPECTION PRECAUTIONS

MAINTENANCE PRECAUTIONS

1. **INSURE CORRECT ENGINE TUNE-UP**

2. **PRECAUTIONS WHEN CONNECTING GAUGE**

   (a) Connect the tachometer (+) terminal to the ignition coil (−) terminal.

   (b) Use the battery as the power source for the timing light, tachometer, etc.

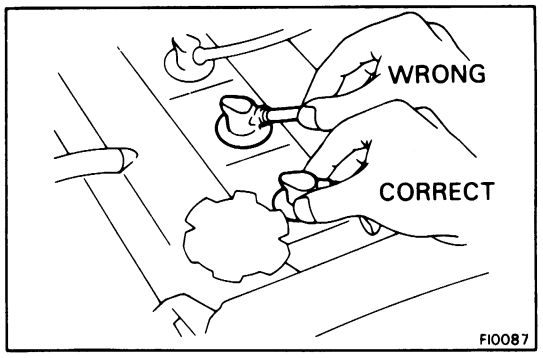

3. **IN EVENT OF ENGINE MISFIRE THE FOLLOWING PRECAUTIONS SHOULD BE TAKEN**

   (a) Insure proper connection of battery terminals, etc.

   (b) Handle high-tension cords carefully.

   (c) After repair work, insure that the ignition coil terminals and all other ignition system lines are reconnected securely.

   When cleaning the engine compartment, be especially careful to protect the electrical system from water.

4. **PRECAUTIONS WHEN HANDLING OXYGEN SENSOR**

   (a) Do not allow oxygen sensor to drop or hit against an object.

   (b) Do not allow water to come into contact with the sensor or attempt to cool it.

IF CAR IS EQUIPPED WITH MOBILE RADIO SYSTEM (HAM, CB, ETC.)

The ECU has been designed so that it will not be affected by outside interference.

However, if your vehicle is equipped with a CB radio transceiver, etc., (even one with about 10 W output), it may, at times, have an affect upon ECU operation, especially if the antenna and feeder are installed nearby.

Therefore, observe the following precautions:

(a) Install the antenna as far as possible from the ECU. The ECU is located at the trunk center, so the antenna should be installed on the front or rear side of the vehicle.

(b) Keep the antenna feeder as far away as possible from the ECU wires-at least 20 cm (7.87 in.), and do not wind them together.

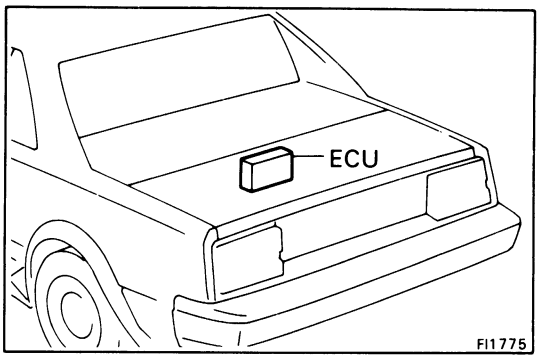

(c) Insure that the feeder and antenna are properly adjusted.

(d) Do not equip your vehicle with a powerful mobile radio system.

AIR INDUCTION SYSTEM

1. Make sure that the oil dipstick, oil filler cap, PCV hose, etc., are all securely fitted, otherwise the engine may run out of tune.
2. Disconnection, looseness or cracks in the parts of the air intake system between the air flow meter and cylinder head will allow air suction and cause the engine to run out of tune.

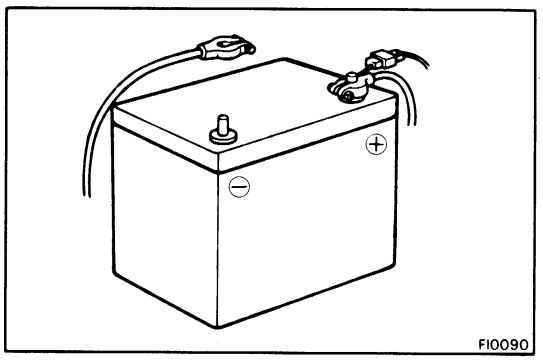

ELECTRONIC CONTROL SYSTEM

1. Before removing EFI wiring connectors, terminals, etc., first disconnect the power by either turning OFF the ignition switch or disconnecting the battery terminals.
2. When installing a battery, be especially careful not to incorrectly connect the positive and negative cables.
3. Do not permit parts to receive a severe impact during removal or installation. Handle all EFI parts carefully, especially the ECU.
4. Do not be careless during troubleshooting as there are numerous transistor circuits and even slight terminal contact can cause further troubles.
5. Do not open the ECU cover.
6. When inspecting during rainy weather, take care to prevent entry of water. Also, when washing the engine compartment, prevent water from getting on the EFI parts and wiring connectors.
7. Parts should be replaced as an assembly.
8. Care is required when pulling out and inserting wiring connectors.

   (a) Release the lock and pull out the connector, pulling on the connectors.

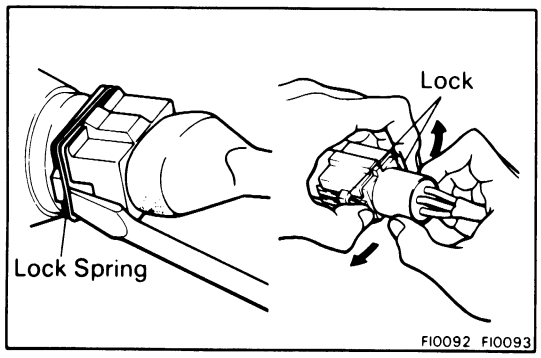

   (b) Fully insert the connector and insure that it is locked.

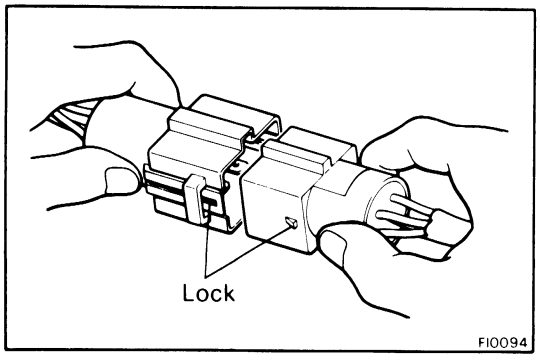

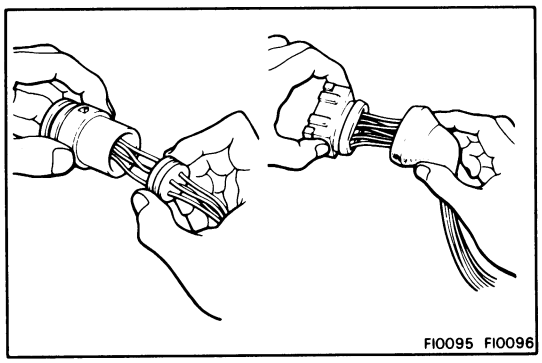

9. When inspecting a connector with a circuit tester.
   (a) Carefully take out the water-proofing rubber if it is a water-proof type connector.

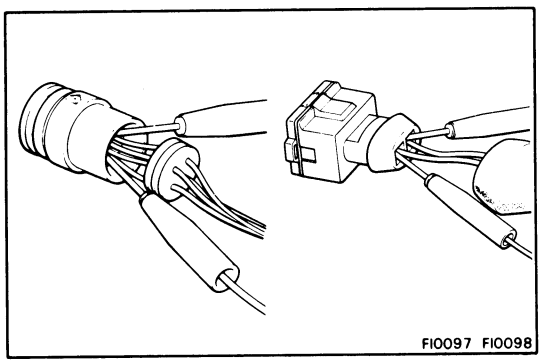

   (b) Insert the tester probe into the connector from the wiring side when checking the continuity, amperage or voltage.
   (c) Do not apply unnecessary force to the terminal.
   (d) After checking, install the water-proofing rubber on the connector securely.

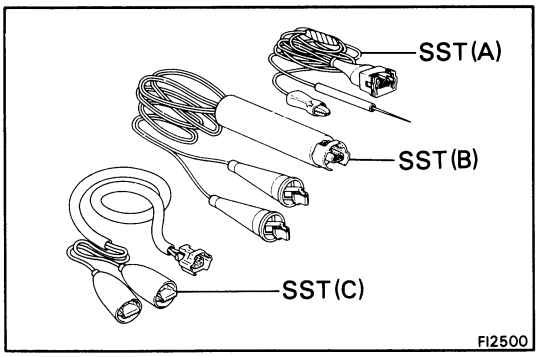

10. Use SST for inspection or test of the injector, cold start injector or its wiring connector.
    SST 09842-30050(A), 09842-30060(B) (4A-GZE) and 09842-30070(C) (4A-GE)

FUEL SYSTEM

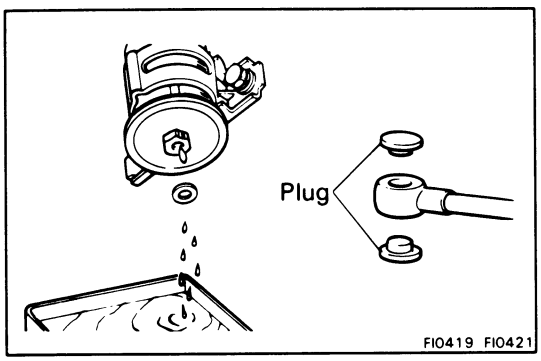

1. When disconnecting the high fuel pressure line, a large amount of gasoline will spill out so observe the following procedure.
   (a) Put a container under the connection.
   (b) Slowly loosen the connection.
   (c) Disconnect the connection.
   (d) Plug the connection with a rubber plug.

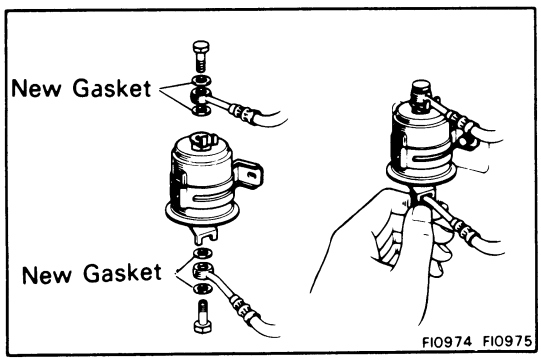

2. When connecting the flare nut or union bolt on the high pressure pipe union, observe the following procedure:
   (Union bolt type)
   (a) Always use a new gasket.
   (b) First tighten the union bolt by hand.
   (c) Then tighten the bolt to the specified torque.
   Torque: 300 kg-cm (22 ft-lb, 29 N·m)

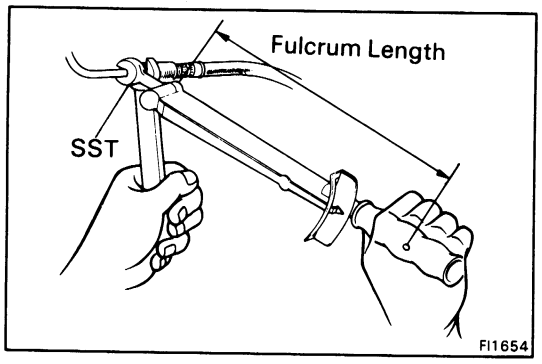

(Flare nut type)

(a) Apply a thin coat of oil to the flare and tighten the flare nut.

(b) Then using SST, tighten the nut to the specified torque.

Torque: 310 kg-cm (22 ft-lb, 30 N·m)

NOTE: Use a torque wrench with a fulcrum length of 30 cm (11.81 in.)

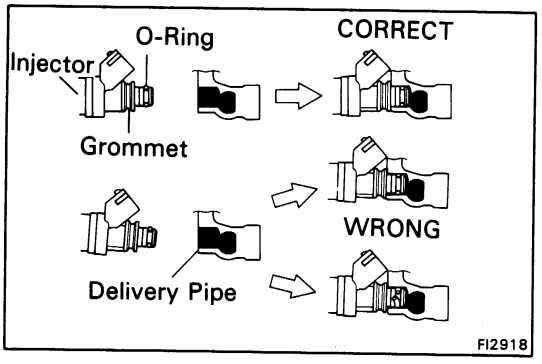

3. Observe the following precautions when removing and installing the injectors.

(a) Never reuse an O-ring.

(b) When placing an O-ring on the injector, use care not to damage it in any way.

(c) Lubricate the O-ring with spindle oil or gasoline before installing – never use engine, gear or brake oil.

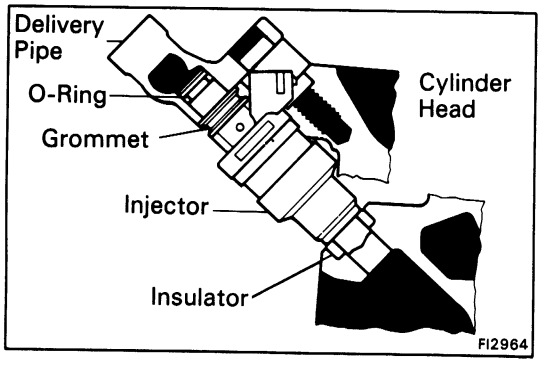

4. Install the injector to the delivery pipe and cylinder head as shown in the figure.

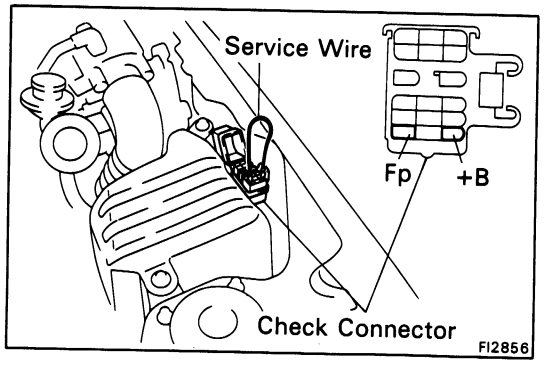

5. Confirm that there are no fuel leaks after performing any maintenance on the fuel system.

(a) With engine stopped, turn the ignition switch to ON.

(b) Short circuit the fuel pump check terminals (F_P – +B) in the check connector.

NOTE: The check connector is located near the resonator (4A-GE) or intercooler (4A-GZE).

(c) When the fuel return hose is pinched, the pressure within the high pressure line will rise to about 4 kg/cm^2 (57 psi, 392 kPa). In this state, check to see that there are no leaks from any part of the fuel system.

CAUTION: Always pinch the hose. Avoid bending as it may cause the hose to crack.

TROUBLESHOOTING

TROUBLESHOOTING HINTS

1. Engine troubles are usually not caused by the EFI system.

   When troubleshooting, always first check the condition of the other systems.

   (a) Electronic source
   - Battery
   - Fusible links
   - Fuses

   (b) Body ground

   (c) Fuel supply
   - Fuel leakage
   - Fuel filter
   - Fuel pump

   (d) Ignition system
   - Spark plugs
   - High-tension cords
   - Distributor
   - Igniter and ignition coil

   (e) Air induction system
   - Vacuum leaks

   (f) Others
   - Ignition timing (ESA system)
   - Idle speed
   - etc.

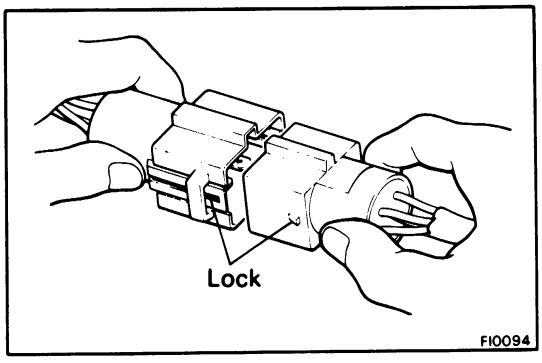

2. The most frequent cause of problems is simply a bad contact in wiring connectors. Always make sure that connections are secure.

   When inspecting the connector, pay particular attention to the following points:

   (a) Check to see that the terminals are not bent.

   (b) Check to see that the connector is pushed in completely and locked.

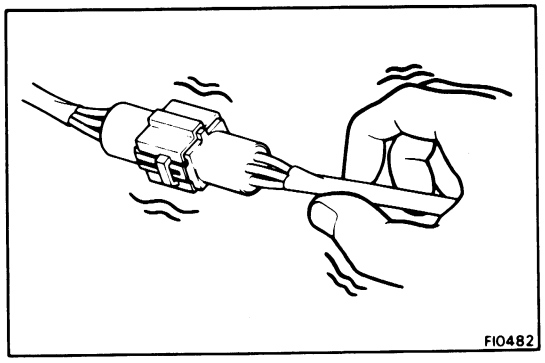

   (c) Check to see that there is no signal change when the connector is slightly tapped or wiggled.

3. Sufficiently troubleshoot for other causes before replacing the ECU, as the ECU is of high quality and it is expensive.

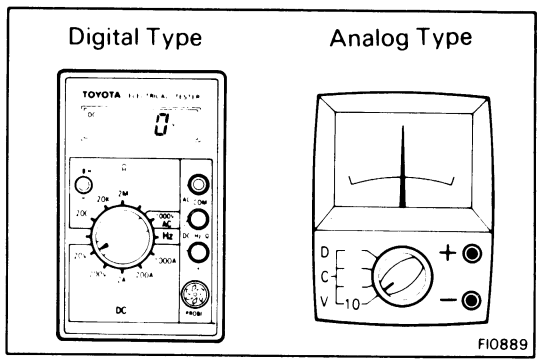

4. Use a volt/ohmmeter with high impedance (10 kΩ/V minimum) for troubleshooting of the electrical circuit. (See page FI-26)

TROUBLESHOOTING PROCEDURES

SYMPTOM – DIFFICULT TO START OR NO START (ENGINE WILL NOT CRANK OR CRANKS SLOWLY)

CHECK ELECTRIC SOURCE

BAD →
1. Battery
   (1) Connection
   (2) Gravity – drive belt–charging system
   (3) Voltage
2. Fusible link

OK ↓

CHECK STARTING SYSTEM

BAD →
1. Ignition switch
2. Clutch (M/T) or Neutral start switch (A/T)
3. Starter relay
4. Starter
5. Wiring/Connection

SYMPTOM – DIFFICULT TO START OR NO START (CRANKS OK)

CHECK DIAGNOSIS SYSTEM
Check for output of diagnosis code.
(See page FI-21)

Malfunction code →
Diagnosis code(s) (See page FI-24 to 27)

Normal code ↓

CHECK FOR VACUUM LEAKS IN AIR INDUCTION SYSTEM

BAD →
1. Oil filler cap
2. Oil level gauge
3. Hose connections
4. PCV hose
5. EGR system – EGR valve stays open

OK ↓

CHECK IGNITION SPARK
1. Unplug connectors of injector and start injector time switch.
2. Check by holding spark plug cord 8 – 10 mm (0.31 – 0.39 in.) away from engine block while cranking engine. A strong spark should be noted.

BAD →
1. High-tension cords
2. Distributor
3. Ignition coil, igniter

OK ↓

CHECK IGNITION TIMING
1. Short terminals **T** and **E₁** of the check connector.
2. Check ignition timing.
   STD: 10° BTDC @ Idling (w/short-circuited T and E₁)

NO →
Ignition timing – Adjust
(See page IG-11)

OK ↓ CONTINUED ON PAGE FI-11

OK CONTINUED FROM PAGE FI-10

CHECK FUEL SUPPLY TO INJECTOR
1. Fuel in tank
2. Fuel pressure in fuel line
   (1) Short terminals **FP** and **+B** of the check connector.
   (2) Fuel pressure at fuel return hose can be felt.
   (See page FI-65 or 68)

BAD →
1. Fuel line – leakage – deformation
2. Fuse
3. Circuit opening relay (See page FI-111)
4. Fuel pump (See page FI-64)
5. Fuel filter
6. Fuel pressure regulator (See page FI-78 or 79)

OK

CHECK FUEL PUMP SWITCH IN AIR FLOW METER
Check continuity between terminals **FC** and **E1** while measuring plate of air flow meter is open.

BAD → Air flow meter (See page FI-94)

OK

CHECK SPARK PLUGS
Plug gap: 1.1 mm (0.043 in.)
– Note –
Check compression pressure and valve clearance if necessary.
(See page EM-14)

NO →
1. Spark plug
2. Compression pressure
   Limit: (at 250 rpm):
   4A-GE 10.0 kg/cm²
   (142 psi, 981 kpa)
   4A-GZE 8.5 kg/cm²
   (120 psi, 834 kpa)
3. Valve clearance (Cold)
   STD: IN 0.15 – 0.25 mm
   (0.006 – 0.010 in.)
   EX 0.20 – 0.30 mm
   (0.008 – 0.012 in.)

BAD (All Plugs WET) →
1. Injector(s)–shorted or leaking
2. Injector wiring(s) between the resistor and ECU shorted
3. Cold start injector – leakage (See page FI-73)
4. Start injector time switch (See page FI-115)

OK

CHECK AUXILIARY AIR VALVE (4A-GE)
(See page FI-108)

BAD →
1. Air valve
2. Water hoses

OK

CHECK ISC VALVE (4A-GZE)
(See page FI-106)

BAD →
1. ISC Valve
2. Wiring connection (See page FI-60)
3. A/C switch

OK

CHECK EFI ELECTRONIC CIRCUIT USING VOLT/OHMMETER
(See page FI-33 or 48)

BAD →
1. Wiring connection
2. Power to computer (ECU)
   (1) Fusible links
   (2) Fuses
   (3) EFI main relay
3. Air Flow meter
4. Water temperature sensor
5. Air temperature sensor (In air flow meter)
6. Injection signal circuit
   (1) Injector wiring
   (2) Computer (ECU)
   (3) Resistor (4A-GZE)

SYMPTOM — ENGINE OFTEN STALLS

CHECK DIAGNOSIS SYSTEM
Check for output of diagnositic code.
(See page FI-21)

Malfunction code(s) → Diagnositic code(s) (See pages FI-24 to 27)

Normal code ↓

CHECK FOR VACUUM LEAKS IN AIR INTAKE LINE

BAD →
1. Oil filler cap
2. Oil level gauge
3. Hose connections
4. PCV hose
5. EGR system — EGR valve stays open

OK ↓

CHECK FUEL SUPPLY TO INJECTOR
1. Fuel in tank
2. Fuel pressure in fuel line
   (1) Short terminals **F_P** and **+B** of the service connector.
   (2) You can feel fuel pressure at fuel hose of fuel filter.
   (See page FI-65 or 68)

BAD →
1. Fuel line — leakage — deformation
2. Fuse
3. Circuit opening relay (See page FI-111)
4. Fuel pump (See page FI-64)
5. Fuel filter
6. Fuel pressure regulator (See page FI-78 or 79)

OK ↓

CHECK AIR FILTER ELEMENT

BAD → Element — Clean or replace

OK ↓

CHECK IDLE SPEED
STD: 800 rpm

NO → Idle speed — Adjust (4A-GE)
ISC system (4A-GZE)

OK ↓

CHECK IGNITION TIMING
1. Short terminals **T** and **E_1** of the check connector.
2. Check ignition timing.
   STD: 10° BTDC @ Idling
   (w/short-circuited T — E_1)

NO → Ignition timing — Adjust
(See page IG-11)

OK ↓

CHECK SPARK PLUGS
Plug gap: 1.1 mm (0.043 in.)
— Note —
Check compression pressure and valve clearance if necessary.
(See page EM-14)

NO →
1. Spark plug
2. Compression pressure
   Limit (at 250 rpm):
   4A-GE 10.0 kg/cm² (142 psi, 981 kpa)
   4A-GZE 8.5 kg/cm² (120 psi, 834 kpa)
3. Valve clearance (Cold)
   STD: IN 0.15 — 0.25 mm (0.006 — 0.010 in.)
   EX 0.20 — 0.30 mm (0.008 — 0.012 in.)

OK ↓

CHECK COLD START INJECTOR
(See page FI-73)

BAD →
1. Cold start injector
2. Start injector time switch.
   (See page FI-115)

OK ↓ CONTINUED ON PAGE FI-13

OK CONTINUED FROM PAGE FI-12

CHECK AUXILIARY AIR VALVE (4A-GE)
(See page FI-108)

BAD →
1. Air valve
2. Water hoses

OK ↓

CHECK ISC VALVE (4A-GZE)
(See page FI-106)

BAD →
1. ISC valve
2. Wiring connection (See page FI-60)
3. A/C switch

OK ↓

CHECK FUEL PRESSURE
(See page FI-65 or 68)

BAD →
1. Fuel pump (See page FI-64)
2. Fuel filter
3. Fuel pressure regulator (See page FI-78 or 79)

OK ↓

CHECK INJECTORS
(See page FI-80)

BAD → Injection condition

OK ↓

CHECK EFI ELECTRONIC CIRCUIT USING VOLT/OHMMETER
(See page FI-33 or 48)

BAD →
1. Wiring connection
2. Power to computer (ECU)
   (1) Fusible links
   (2) Fuses
   (3) EFI main relay
3. Air flow meter
4. Water temperature sensor
5. Air temperature sensor (In air flow meter)
6. Injection signal circuit
   (1) Injector wiring
   (2) Computer (ECU)
   (3) Resistor (4A-GZE)

SYMPTOM – ENGINE SOMETIMES STALLS

CHECK DIAGNOSIS SYSTEM
Check for output of diagnostic code.
(See page FI-21)

Malfunction code → Diagnositic code(s) (See pages FI-24 to 27)

Normal code ↓

CHECK AIR FLOW METER
(See page FI-94)

BAD → Air flow meter

OK ↓

CHECK WIRING CONNECTORS AND RELAYS
Check that there is a signal change when the connector or relay is slightly tapped or wiggled.

BAD →
1. Connector
2. EFI main relay (See page FI-110)
3. Circuit opening relay (See page FI-111)

SYMPTOM — ROUGH IDLING AND/OR MISSING

CHECK DIAGNOSIS SYSTEM
Check for output of diagnositic code.
(See page FI-21)

Malfunction code → Diagnositic code(s) (See pages FI-24 to 27)

Normal code ↓

CHECK FOR VACUUM LEAKS IN AIR INTAKE LINE

BAD →
1. Oil filler cap
2. Oil level gauge
3. Hose connections
4. PCV hose
5. EGR system — EGR valve stays open

OK ↓

CHECK AIR FILTER ELEMENT

BAD → Element — Clean or replace

OK ↓

CHECK IDLE SPEED
STD: 800 rpm

NO → Idle speed — Adjust (4A-GE)
ISC system (4A-GZE)

OK ↓

CHECK IGNITION TIMING
1. Short terminals **T** and **E_1** of the check connector.
2. Check ignition timing.

STD: 10° BTDC @ Idling (w/short-circuited T — E_1)

NO → Ignition timing — Adjust
(See page IG-11)

OK ↓

CHECK SPARK PLUGS
Plug gap: 1.1 mm (0.043 in.)
— Note —
Check compression pressure and valve clearance if necessary.
(See page EM-14)

NO →
1. Spark plug
2. Compression pressure
   Limit (at 250 rpm):
   4A-GE 10.0 kg/cm² (142 psi, 981 kpa)
   4A-GZE 8.5 kg/cm² (120 psi, 834 kpa)
3. Valve clearance (Cold)
   STD: IN 0.15 — 0.25 mm (0.006 — 0.010 in.)
   EX 0.20 — 0.30 mm (0.008 — 0.012 in.)

OK ↓

CHECK AIR CONTROL VALVE (4A-GE)
Check that the air control valve is closed.

NO →
1. VSV for air control valve
2. Vacuum leaks

OK ↓

CHECK ISC VALVE (4A-GZE)
(See page FI-106)

BAD →
1. ISC valve
2. Wiring connection (See page FI-60)
3. A/C switch

OK ↓

CHECK COLD START INJECTOR
(See page FI-73)

BAD →
1. Cold start injector
2. Start injector time switch.
   (See page FI-115)

OK ↓ CONTINUED ON PAGE FI-15

OK CONTINUED FROM PAGE FI-14

CHECK FUEL PRESSURE
(See page FI-65 or 68)

BAD →

1. Fuel pump (See page FI-64)
2. Fuel filter
3. Fuel pressure regulator
   (See page FI-78 or 79)

OK ↓

CHECK INJECTORS
(See page FI-80)

BAD →

Injection condition

OK ↓

CHECK EFI ELECTRONIC CIRCUIT USING VOLT/OHMMETER
(See page FI-33 or 48)

BAD →

1. Wiring connection
2. Power to computer (ECU)
   (1) Fusible link
   (2) Fuses
   (3) EFI main relay
3. Air flow meter
4. Water temperature sensor
5. Air temperature sensor (In air flow meter)
6. Injection signal circuit
   (1) Injector wirings
   (2) Computer (ECU)
   (3) Resistor (4A-GZE)
7. Oxygen sensor

SYMPTOM — HIGH ENGINE IDLE SPEED (NO DROP)

CHECK ACCELERATOR LINKAGE
- BAD → Linkage – Stuck dash pot system
- OK ↓

CHECK AUXILIARY AIR VALVE (4A-GE)
(See page FI-108)
- BAD → 1. Air valve 2. Water hoses
- OK ↓

CHECK ISC VALVE (4A-GZE)
(See page FI-106)
- BAD → 1. ISC valve 2. Wiring connection (See page FI-60) 3. A/C switch
- OK ↓

CHECK AIR CONDITIONER IDLE-UP CIRCUIT
- BAD → Air valve for air conditioner – Leakage; VSV for air conditioner – Leakage
- OK ↓

CHECK DIAGNOSIS SYSTEM
Check for output of diagnosis code.
(See page FI-21)
- Malfunction code → Diagnosis code(s) (See pages FI-24 to 27)
- Normal code ↓

CHECK THROTTLE POSITION SENSOR
(See page FI-98)
- BAD → Throttle body
- OK ↓

CHECK FUEL PRESSURE
(See page FI-65 or 68)
- BAD → Fuel pressure regulator – High pressure
- OK ↓

CHECK COLD START INJECTOR
(See page FI-73)
- BAD → Cold start injector – Leakage
- OK ↓

CHECK INJECTORS (See page FI-80)
- BAD → Injectors – Leakage, Injection quality
- OK ↓

CHECK EFI ELECTRONIC CIRCUIT USING VOLT/OHMMETER
(See page FI-33 or 48)
- BAD →
  1. Wiring connection
  2. Power to computer (ECU)
     (1) Fusible links
     (2) Fuses
     (3) EFI main relay
  3. Air flow meter
  4. Water temperature sensor
  5. Air temperature sensor (In air flow meter)
  6. Injection signal circuit
     (1) Injector wiring
     (2) Computer (ECU)
     (3) Resistor (4A-GZE)

SYMPTOM — ENGINE BACKFIRES-Lean Fuel Mixture

CHECK DIAGNOSIS SYSTEM
Check for output of diagnosis code.
(See page FI-21)

Malfunction code → Diagnosis code(s) (See pages FI-24 to 27)

Normal code ↓

CHECK FOR VACUUM LEAKS IN AIR INTAKE LINE

BAD →
1. Oil filler cap
2. Oil level gauge
3. Hose connections
4. PCV hoses
5. EGR system — EGR valve stays open

OK ↓

CHECK IGNITION TIMING
1. Short terminals **T** and **E₁** of the check connector.
2. Check ignition timing.
   STD: 10° BTDC @ Idling (w/short-circuited T — E₁)

NO → Ignition timing — Adjust (See page IG-11)

OK ↓

CHECK IDLE SPEED
STD: 800 rpm

BAD → Idle speed — Adjust (4A-GE)
ISC system (4A-GZE)

OK ↓

CHECK COLD START INJECTOR
(See page FI-73)

BAD →
1. Cold start injector
2. Start injector time switch (See page FI-115)

OK ↓

CHECK FUEL PRESSURE
(See page FI-65 or 68)

BAD →
1. Fuel pump (See page FI-64)
2. Fuel filter
3. Fuel pressure regulator (See page FI-78 or 79)

OK ↓

CHECK INJECTORS
(See page FI-80)

BAD → Injectors — Clogged

OK ↓

CHECK EFI ELECTRONIC CIRCUIT USING VOLT/OHMMETER
(See page FI-33 or 48)

BAD →
1. Wiring connection
2. Power to computer (ECU)
   (1) Fusible links
   (2) Fuses
   (3) EFI main relay
3. Air flow meter
4. Water temperature sensor
5. Air temperature sensor (In air flow meter)
6. Throttle position sensor
7. Injection signal circuit
   (1) Injector wirings
   (2) Computer (ECU)
   (3) Fuel cut signal
   (4) Resistor (4A-GZE)
8. Oxygen sensor

SYMPTOM — MUFFLER EXPLOSION (AFTER FIRE) -Rich Fuel Mixture-Misfire

CHECK DIAGNOSIS SYSTEM
Check for output of diagnosis code.
(See page FI-21)

Malfunction code → Diagnosis code(s) (See pages FI-24 to 27)

Normal code ↓

CHECK IGNITION TIMING
1. Short terminals **T** and **E_1** of the check connector.
2. Check ignition timing.
   STD: 10° BTDC @ Idling (w/short-circuited T — E_1)

NO → Ignition timing — Adjust (See page IG-11)

OK ↓

CHECK IDLE SPEED
STD: 800 rpm

NO → Idle speed — Adjust (4A-GE)
ISC system (4A-GZE)

OK ↓

CHECK COLD START INJECTOR
(See page FI-115)

BAD → 1. Cold start injector
2. Start injector time switch (See page FI-115)

OK ↓

CHECK FUEL PRESSURE
(See page FI-65 or 68)

BAD → Fuel pressure regulator

OK ↓

CHECK INJECTORS (See page FI-80)

BAD → Injectors — Leakage

OK ↓

CHECK SPARK PLUGS
Plug gap: 1.1 mm (0.043 in.)
— Note —
Check compression pressure and valve clearance if necessary.
(See page EM-14)

NO →
1. Spark plug
2. Compression pressure
   Limit (at 250 rpm):
   4A-GE 10.0 kg/cm² (142 psi, 981 kpa)
   4A-GZE 8.5 kg/cm² (120 psi, 834 kpa)
3. Valve clearance (cold)
   STD: IN 0.15 — 0.25 mm (0.006 — 0.010 in.)
   EX 0.20 — 0.30 mm (0.008 — 0.012 in.)

OK ↓

CHECK EFI ELECTRONIC CIRCUIT USING VOLT/OHMMETER
(See page FI-33 or 48)

BAD →
1. Throttle position sensor
2. Injection signal
   (1) Injector wiring
   (2) Fuel cut RPM (See page FI-128)
   (3) Computer (ECU)
   (4) Resistor (4A-GZE)
3. Oxygen sensor

SYMPTOM — ENGINE HESITATES AND/OR POOR ACCELERATION

CHECK CLUTCH OR BRAKE
→ BAD → 1. Clutch – Slips
2. Brakes – Drag

↓ OK

CHECK FOR VACUUM LEAKS IN AIR INTAKE LINE
→ BAD → 1. Oil filler cap
2. Oil level gauge
3. Hose connections
4. PCV hose
5. EGR system – EGR valve stays open

↓ OK

CHECK AIR FILTER ELEMENT
→ BAD → Element – Clean or replace

↓ OK

CHECK DIAGNOSIS SYSTEM
Check for output of diagnosis code.
(See page FI-21)
→ Malfunction code → Diagnosis code(s) (See pages FI-24 to 27)

↓ Normal code

CHECK IGNITION SPARK
1. Unplug connectors of injector and start injection time switch.
2. Check by holding spark plug 8 – 10 mm (0.31 – 0.39 in.) away from engine block while cranking engine. A strong spark should be noted.
→ BAD → 1. High-tension cords
2. Distributor
3. Ignition coil, Igniter

↓ OK

CHECK IGNITION TIMING
1. Short terminals **T** and **E_1** of the check connector.
2. Check ignition timing.
STD: 10° BTDC @ Idling (w/short-circuited T – E_1)
→ NO → Ignition timing – Adjust
(See page IG-11)

↓ OK

CHECK FUEL PRESSURE
(See page FI-65 or 68)
→ BAD → 1. Fuel pump (See page FI-64)
2. Fuel filter
3. Fuel pressure regulator (See page FI-78 or 79)

↓ OK

CHECK INJECTORS
(See page FI-80)
→ BAD → Injection condition

↓ OK CONTINUED ON PAGE FI-20

OK CONTINUED FROM PAGE FI-19

CHECK SPARK PLUGS
Plug gap: 1.1 mm (0.043 in.)
–Note–
Check compression pressure and valve clearance if necessary.
(See page EM-14)

NO →

1. Spark plug
2. Compression pressure
   Limit (at 250 rpm):
   4A-GE 10.0 kg/cm^2 (142 psi, 981 kpa)
   4A-GZE 8.5 kg/cm^2 (120 psi, 834 kpa)
3. Valve clearance (Cold)
   STD: IN 0.15 – 0.25 mm (0.006 – 0.010 in.)
   EX 0.20 – 0.30 mm (0.008 – 0.012 in.)

OK

CHECK AIR CONTROL VALVE (4A-GE)
Check if air control valve is open with engine running at 4,350 rpm or above.

NO →

VSV for air control valve

OK

CHECK EFI ELECTRONIC CIRCUIT USING VOLT/OHMMETER
(See page FI-33 or 48)

BAD →

1. Wiring connection
2. Power to computer (ECU)
   (1) Fusible link
   (2) Fuses
   (3) EFI main relay
3. Air flow meter
4. Water temp. sensor
5. Air temp. sensor (In air flow meter)
6. Throttle position sensor
7. Injection signal circuit
   (1) Injector wirings
   (2) Computer (ECU)
   (3) Resistor (4A-GZE)

DIAGNOSIS SYSTEM

DESCRIPTION

The ECU contains a built-in self-diagnosis system by which troubles with the engine signal network are detected and an indicated by a "CHECK ENGINE" warning light on the instrument panel flashes.

By analyzing various signals as shown in the later table (pages FI-24 to 27) the Electronic Control Unit (ECU) detects system malfunctions which are related to the various operating parameter sensors or to actuator. The ECU stores the failure code associated with the detected failure until the diagnosis system is cleared by removing the AM_2 fuse with the ignition switch off.

A "CHECK ENGINE" warning light on the instrument panel informs the driver that a malfunction has been detected.
The light goes out automatically when the malfunction has been cleared.

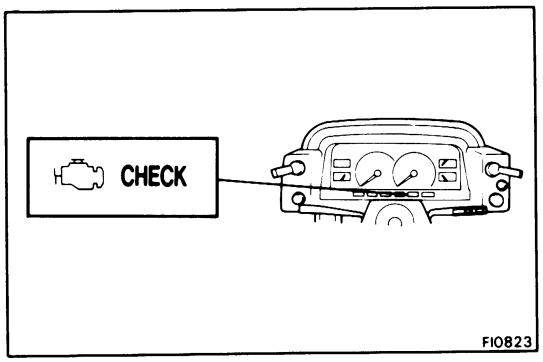

"CHECK ENGINE" WARNING LIGHT CHECK

1. The "CHECK ENGINE" warning light will come on when the ignition switch is placed at ON and the engine is not running.
2. When the engine is started, the "CHECK ENGINE" warning light should go out.

   If the light remains on, the diagnosis system has detected a malfunction or abnormality in the system.

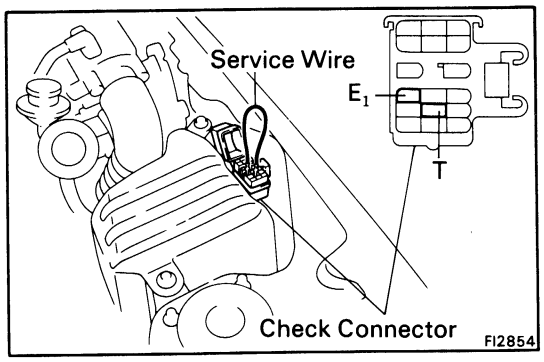

OUTPUT OF DIAGNOSTIC CODES

To obtain an output of diagnostic codes, proceed as follows:

1. Initial conditions
   (a) Battery voltage above 11 volts
   (b) Throttle valve fully closed (throttle position sensor IDL points closed)
   (c) Transmission in neutral position
   (d) Accessory switches OFF
   (e) Engine at normal operating temperature
2. Turn the ignition switch to ON. Do not start the engine.
3. Using a service wire short terminals T and E_1 of the check connector.

   NOTE: The check connector is located near the resonator (4A-GE) or intercooler (4A-GZE).

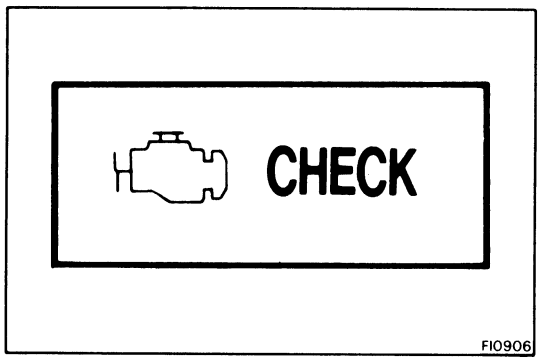

4. Read the diagnosis code as indicated by the number of flashes of the "CHECK ENGINE" warning light.

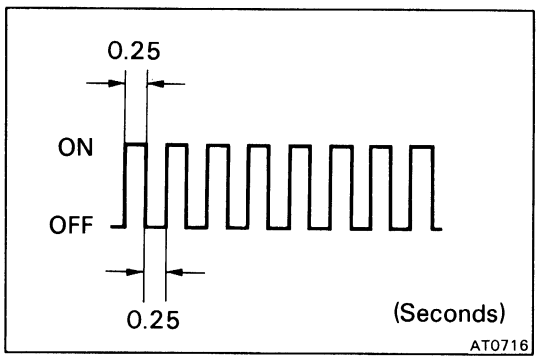

Diagnosis code (See pages FI-24 to 27)

(a) Normal System Operation
The light will blink once every 0.5 seconds.

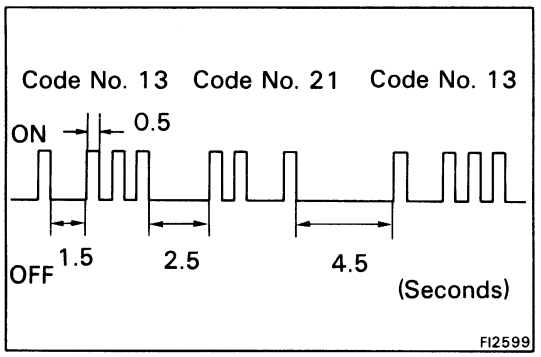

(b) Malfunction Code Indication

- The light will blink a number of times equal to the malfunction code indication as follows:
  1. Between the first digit and second digit, 1.5 seconds.
  2. Between code and code, 2.5 seconds.
  3. Between all malfunction codes, 4.5 seconds.

The diagnostic code series will be repeated as long as the check connector terminal T and E_1 are shorted.

NOTE: In the event of a number of trouble codes, indication will begin from the smaller value and continue in order to the larger.

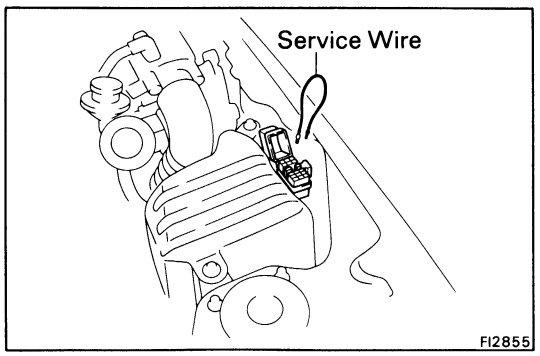

5. After the diagnosis check, remove the service wire.

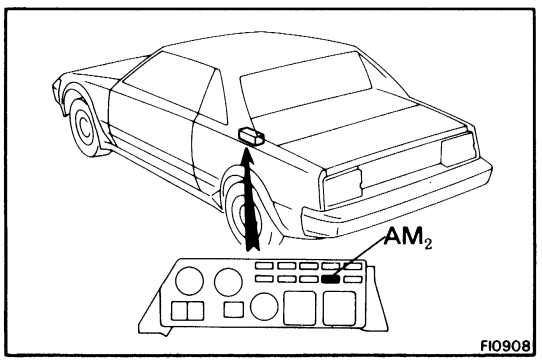

CANCELLING DIAGNOSTIC CODE

1. After repair of the trouble area, the diagnosis code retained in memory by the ECU must be cancelled out by removing the fuse AM_2 (7.5A), located in the engine compartment No. 2 relay box, for 10 seconds or more, depending on ambient temperature (the lower the temperature, the longer the fuse must be left out) with the ignition switch off.

   NOTE:

   - Cancellation can also be done by removing the battery negative (−) terminal, but in this case, other memory systems (clock, etc.) will also be cancelled out.
   - If the diagnosis code is not cancelled out, it will be retained by the ECU and appear along with a new code in the event of future trouble.
   - If it is necessary to work on engine components requiring removal of the battery terminal, a check must first be made to see if a diagnostic code has been recorded.

2. After cancellation, perform a road test to confirm that a "normal" code is now read on the "CHECK ENGINE" warning light.

   If the same diagnosis code appears, it indicates that the trouble area has not been repaired thoroughly.

DIAGNOSTIC CODES (4A-GE)

Code No.	Number of blinks "CHECK ENGINE"	System	Diagnosis	Trouble area	See page
–	ON OFF FI1401	Normal	This appears when none of the other codes are identified.	–	–
12	FI1389	RPM Signal	● No "Ne" signal to ECU within 2 seconds after engine has been cranked. ● No "G" signal to ECU 2 times in succession when engine speed is between 500 rpm and 4,000 rpm.	● Distributor circuit ● Distributor ● Starter signal circuit ● Igniter circuit ● Igniter ● ECU	–
13	FI1390	RPM Signal	No. "Ne" signal to ECU when the engine speed is above 1,500 rpm.	● Distributor circuit ● Distributor ● ECU	
14	FI1391	Ignition Signal	No "IGf" signal to ECU 4 times in succession.	● Igniter circuit ● Igniter ● Igniter and ignition coil circuit ● Igniter and ignition coil ● ECU	FI-44
21	FI1400	Oxygen Sensor Signal	Detection of oxygen sensor detrioration.	● Oxygen sensor circuit ● Oxygen sensor ● ECU	FI-46
		Oxygen Sensor Heater	Open or short circuit in oxygen sensor heater	● Oxygen sensor heater circuit ● Oxygen sensor heater ● ECU	
22	FI1392	Water Temp. Sensor Signal	Open or short circuit in water temp. sensor signal. (THW)	● Water temp. sensor circuit ● Water temp. sensor ● ECU	FI-42
24	FI1611	Intake Air Temp. Sensor Signal	Open or short circuit in intake air temp. sensor signal. (THA)	● Intake air temp. sensor circuit ● Intake air temp. sensor ● ECU	FI-41
25	FI2562	Air fuel Ratio Lean Malfunction	When air-fuel ratio feedback compensation valve or adaptive control value continues at the upper (lean) or lower (rich) limit renewed for a certain period of time.	● Injection circuit ● Injector ● Oxygen sensor circuit ● Oxygen sensor ● Oxygen sensor ● ECU ● Fuel line pressure ● Air leat ● Air flow meter ● Ignition system	FI-46
26	FI2563	Air-fuel Ratio Rich Malfunction		● Injector circuit ● Injector ● Oxygen sensor ciruit ● Oxygen sensor ● Fuel line pressure ● Air flow meter ● Cold start injector ● ECU	

DIAGNOSTIC CODES (4A-GE) (Cont'd)

Code No.	Number of blinks "CHECK ENGINE"	System	Diagnosis	Trouble area	See page
31	FI1394	Air-flow Meter Signal	Short circuit between VC and VB, VC and E2 or VS and VC.	● Air flow meter circuit ● Air flow meter ● ECU	FI-38
41	FI1396	Throttle Position Sensor Signal	Open or short circuit in throttle position signal.	● Throttle position sensor circuit ● Throttle position sensor ● ECU	FI-36
42	FI1397	Vehicle Speed Sensor Signal	No "SPD" signal for 8 seconds when engine speed is between 2,500 and 5,500 rpm.	● Vehicle speed sensor circuit ● Vehicle speed sensor ● ECU	–
43	FI1398	Starter Signal	No "STA" signal to ECU until engine speed reaches 800 rpm with vehicle not moving.	● IG switch circuit ● IG switch ● ECU	FI-43
* 71	FI2622	EGR System Malfunction	EGR gas temp. below prede terminal level for during EGR control.	● EGR system (EGR valve, EGR hose etc.,) ● EGR gas temp. sensor circuit ● EGR gas temp. sensor ● VSV for EGR. ● VSV for EGR circuit ● ECU	FI-47
51	FI1399	Switch Signal	Air conditioner switch ON, idle switch OFF or A/T shift position other than "P" or "N" range during diagnosis check.	● A/C switch circuit ● A/C switch ● A/C Amplifier ● Throttle position sensor circuit ● Throttle position sensor ● ECU	FI-45

* For California

DIAGNOSTIC CODES (4A-GZE)

Code No.	Number of blinks "CHECK ENGINE"	System	Diagnosis	Trouble area	See page
–	ON OFF FI1401	Normal	This appears when none of the other codes are identified.	–	–
11	FI1605	ECU (+B)	Momentary interruption in power supply to ECU.	• Ignition switch circuit • Ignition switch • Main relay circuit • Main relay • ECU	FI-49
12	FI1389	RPM Signal	No "Ne" or "G" signal to ECU within 2 seconds after engine has been cranked.	• Distributor circuit • Distributor • Starter signal circuit • ECU	–
13	FI1390	RPM Signal	No "Ne" signal to ECU when engine speed is above 1,000 rpm.	• Distributor circuit • Distributor • ECU	
14	FI1391	Ignition Signal	No "IGf" signal to ECU 8 – 11 times in succession.	• Igniter and ignition coil circuit • Igniter and ignition coil • ECU	FI-59
21	FI1400	Oxygen Sensor	Detection of oxygen sensor detrioration.	• Oxygen sensor circuit • Oxygen sensor • ECU	FI-62
		Oxygen Sensor Heater	Open or short circuit oxygen sensor heater.	• Oxygen sensor heater circuit • Oxygen sensor heater • ECU	
22	FI1392	Water Temp. Sensor Signal	Open or short circuit in water temp. screw signal.	• Water temp. sensor • Water temp. sensor • ECU	FI-57
24	FI1611	Intake Air Temp. Sensor Signal	Open or short circuit in intake air temp. sensor signal.	• Intake air temp. sensor Circuit • Intake air temp. sensor • ECU	FI-56
25	FI2562	Air-fuel Ratio Lean Malfunction	When air-fuel ratio feedback compensation valve or adaptive control value continues at the upper (lean) or lower (rich) limit renewed for a certain period of time.	• Injector circuit • Injector • Oxygen sensor circuit • Oxygen sensor • ECU • Air leak • Fuel line pressure • Air flow meter	FI-62
26	FI2563	Air-fuel Ratio Rich Malfunction		• Injector circuit • Injector • Oxygen sensor circuit • Oxygen sensor • Fuel line pressure • Air flow meter • ECU	

DIAGNOSTIC CODES (4A-GZE) (Cont'd)

Code No.	Number of blinks "CHECK ENGINE"	System	Diagnosis	Trouble area	See page
31	FI1394	Air-flow Meter Signal	Open circuit in VC signal or short circuit between VS and E2 when idle contacts are closed	● Air flow meter circuit ● Air flow meter ● ECU	FI-53
32	FI1395	Air-flow Meter Signal	Open circuit in E2 or short circuit between VC and VS	● Air flow meter circuit ● Air-flow meter ● ECU	
41	FI1396	Throttle Position Sensor Signal	Open or short circuit in throttle position sensor signal.	● Throttle position sensor circuit ● Throttle position sensor	FI-51
42	FI1397	Vehicle Speed Sensor Signal	No "SPD" signal for 8 seconds when engine speed is between 2,300 rpm and 5,000 rpm and coolant temp. is above 80°C (176°F) except when racing the engine.	● Vehicle speed sensor circuit ● Vehicle speed sensor ● ECU	–
43	FI1398	Starter Signal	No "STA" signal to ECU until engine speed reaches 800 rpm with Vehicle not moving	● IG switch circuit ● IG switch ● ECU	FI-58
52	FI1618	Knock Sensor Signal	Open or short circuit in knock sensor signal	● Knock sensor circuit ● Knock sensor ● ECU	–
53	FI1619	Knock Control Signal in ECU	Knock control in ECU faulty	● ECU	
* 71	FI2622	EGR System Malfunction	EGR gas temp. below predetermined level during EGR operation	● EGR system (EGR valve, EGR hose etc.,) ● EGR gas temp. sensor circuit ● EGR gas temp. sensor ● VSV for EGR ● VSV for EGR circuit ● ECU	FI-63
51	FI1399	Switch Signal	Air conditioner switch ON, idle switch OFF or A/T shift position other than "P" or "N" range during diagnosis check.	● A/C switch circuit ● A/C switch ● A/C amplifire ● Throttle position sensor circuit ● Throttle position sensor ● ECU	FI-61

*: For California

INSPECTION OF DIAGNOSIS CIRCUIT

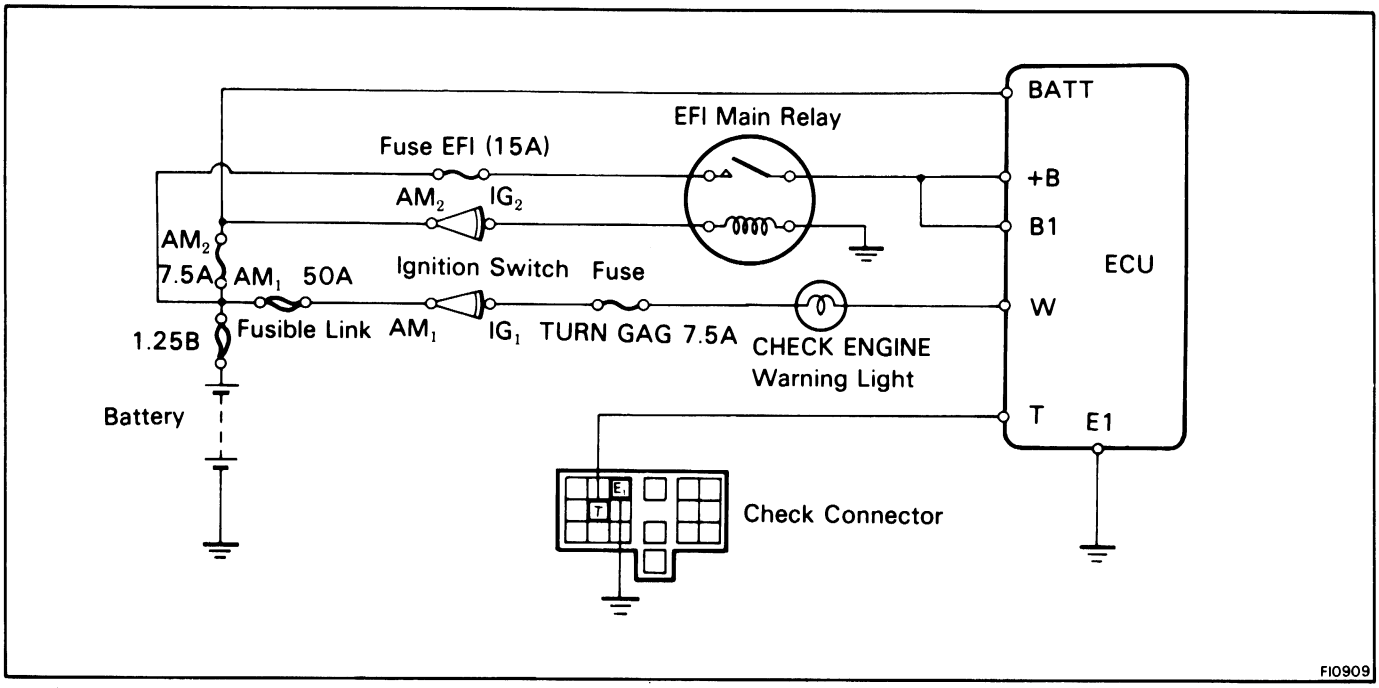

1. Does CHECK ENG. warning light come on when ignition switch is at ON?
   - YES → System Normal
   - NO ↓
2. Does CHECK ENG. light come on when ECU terminal W is grounded to the body.
   - YES → Check wiring between ECU terminal E_1 and body ground.
     - OK → Try another ECU
     - BAD ↓ Repair or replace
   - NO ↓
3. Check bulb, fuse and wiring between ECU and ignition switch.
   - BAD ↓ Repair or replace

2. Does CHECK ENG. warning light go OFF when the engine is started?
   - YES → System Normal
   - NO ↓
1. Check wiring between ECU and CHECK ENG. warning light.
   - BAD → Repair
   - OK ↓
2. Is there diagnositic code output when check connector terminals T and E_1 are short circuited?
   - NO → Try another ECU
   - YES ↓
3. Does CHECK ENG. warning light go out after repair according to malfunction code?
   - NO → Further repair required
   - YES ↓
4. System OK → Cancel out diagnois code.

TROUBLESHOOTING WITH VOLT/OHMMETER (4A-GE)

PREPARATION OF TROUBLESHOOTING

1. **Remove the rear luggage compartment trim.**
2. **Remove the ECU with the wire harness.**

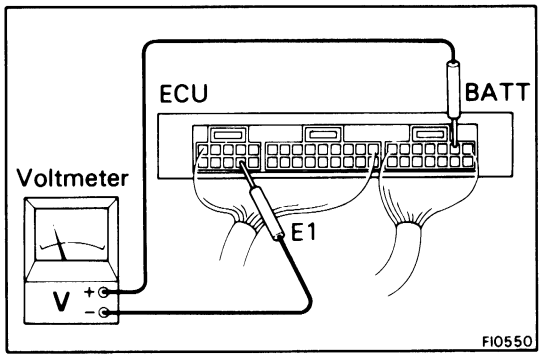

EFI SYSTEM CHECK PROCEDURE

NOTE:
1. The EFI circuit can be checked by measuring the resistance and voltage at the wiring connectors of the ECU.
2. Perform all voltage measurements with the connectors connected.
3. Verify that the battery voltage is 11V or above when the ignition switch is at ON.

Using a voltmeter with high impedance (10 kΩ/V minimum), measure the voltage at each terminal of the wiring connector.

NOTE: If there is any problem, see TROUBLESHOOTING FOR EFI ELECTRONIC CIRCUIT WITH VOLT/OHMMETER.

Connectors of ECU

Symbol	Terminal	Symbol	Terminal	Symbol	Terminal
E01	Engine ground (Power)	T	Service connector	*1 L3	ECT Computer
E02	Engine ground (Power)	–	—	*1 ECT	ECT Computer
No. 10	No. 3, 4 injector	IDL	Throttle position sensor	*1 L1	ECT Computer
No. 20	No. 1, 2 injector	A/C	A/C Magnet clutch	*1 L2	ECT Computer
STA	Starter switch	IGF	Igniter	VC	Air flow meter
IGT	Igniter	E2	Sensor ground	E21	Sensor ground
VF	Service connector	G ⊖	Engine revolution sensor	VS	Air flow meter
E1	Engine ground	OX	Oxygen sensor	STP	Stop light switch
*1 NSW	Neutral start switch	G ⊖	Engine revolution sensor	THA	Inlet air temperature sensor
S/TH	VSV (T-VIS)	VCC	Throttle position sensor	SPD	Speedometer sensor
FPU	VSV (FPU)	*2 THG	EGR temperature sensor	BATT	Battery
V-ISC	VSV (ISC)	VTA	Throttle position sensor	–	—
W	Warning light	NE	Engine revolution sensor	+ B1	EFI main relay
HT	Oxygen sensor heater	THW	Water temperature sensor	+ B	EFI main relay

*1 : For A/T
*2 : For Calif.

ECU Connectors

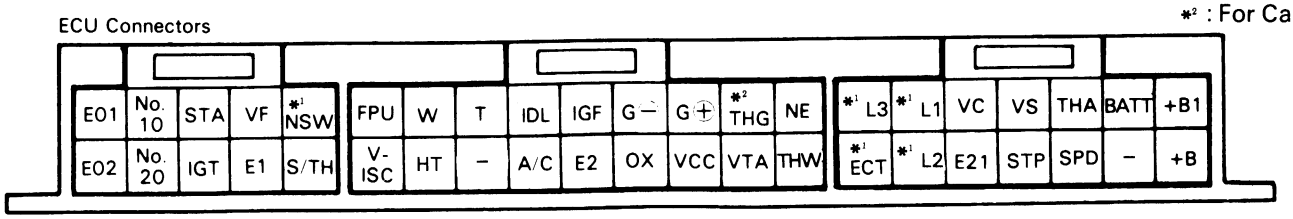

FI0234

Voltage at ECU wiring connectors

No.	Terminals	STD voltage	Condition		See page
1	+ B1 + B – E1	10 – 14	Ignition SW ON		FI-34
2	BATT – E1	10 – 14	—		FI-35
3	IDL – E2	M/T 4 – 5 A/T 10 – 14	Ignition SW ON	Throttle valve open	FI-36
	VTA – E2	0.1 – 1.0		Throttle valve fully closed	
		4 – 5		Throttle valve fully open	
	VCC – E2	4 – 6		—	
4	+B1 – E2	10 – 14	Ignition SW ON	—	FI-38
	VC – E2	6 – 10		—	
	VS – E2	2 – 5.5		Measuring plate fully closed	
		6 – 9		Measuring plate fully open	
		2 – 8	Idling	—	
5	No. 10 – E01 No. 20 E02	9 – 14	Ignition SW ON		FI-39
6	W – E1	9 – 14	No trouble (Check engine warning light off) and engine running		FI-40
7	THA – E2	1 – 3	Ignition SW ON	Intake air temperature 20°C (68°F)	FI-41
8	THW – E2	0.1 – 1.0	Ignition SW ON	Coolant temperature 80°C (176°F)	FI-42
9	STA – E1	6 – 14	Ignition SW ST position and press on the clutch pedal (M/T)		FI-43
10	IGT – E1	0.7 – 1.0	Idling		FI-44
11	A/C – E1	5 – 14	Air conditioning ON		FI-45

*1 : For A/T
*2 : For Calif.

ECU Connectors

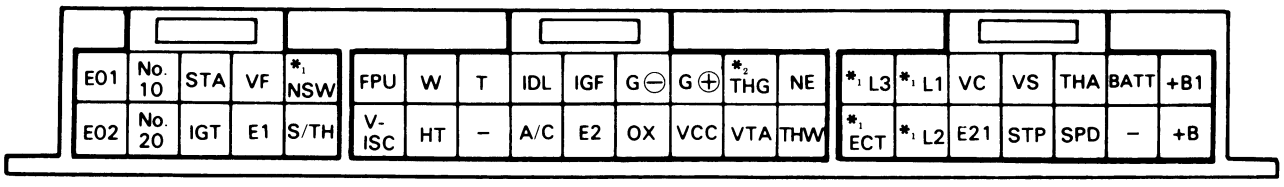

FI0234

TROUBLESHOOTING WITH VOLT/OHMMETER (4A-GZE)

PREPARATION OF TROUBLESHOOTING

1. **Remove the rear luggage compartment trim.**
2. **Remove the ECU with the wire harness.**

EFI SYSTEM CHECK PROCEDURE

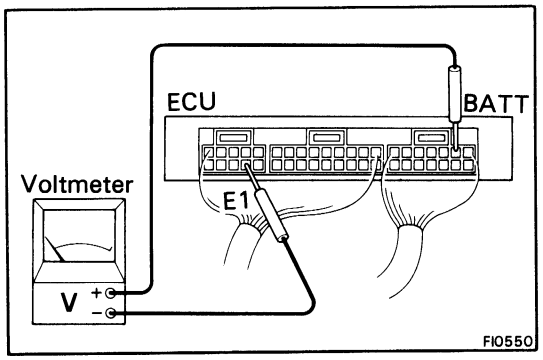

NOTE:
1. The EFI circuit can be checked by measuring the resistance and voltage at the wiring connectors of the ECU.
2. Perform all voltage measurements with the connectors connected.
3. Verify that the battery voltage is 11V or above when the ignition switch is at ON.

Using a voltmeter with high impedance (10 kΩ/V minimum), measure the voltage at each terminal of the wiring connector.

NOTE: If there is any problem, see TROUBLESHOOTING FOR EFI ELECTRONIC CIRCUIT WITH VOLT/OHMMETER.

Connectors of ECU

Symbol	Terminal	Symbol	Terminal	Symbol	Terminal
E01	Engine ground (Power)	G2	Engine revolution sensor	TIL	Super charge indicator lamp.
E02	Engine ground (Power)	VTA	Throttle position sensor	A/C	A/C Magnet clutch
RSC	ISC valve	NE	Engine revolution sensor	SPD	Speedometer sensor
RSO	ISC valve	IDL	Throttle position sensor	W	Warning light
STA	Starter switch	VSV3	VSV (Air by-pass)	ELS1	Stop light
IGT	Igniter	HT	Oxygen sensor heater	FPU	VSV (FPU)
EGR	EGR valve	IGF	Igniter	THA	Inlet air temp. sensor
E1	Engine ground	OX	Oxygen sensor	KNK	Knock sensor
*1 NSW	Neutral start switch	THW	Water temperature sensor	VS	Air flow meter
SMC	Super charger relay	E2	Sensor ground	–	–
No. 10	No. 3, 4 injector	R/P	Fuel control switch	VC	Air flow meter
–	–	E22	Sensor ground	*2 THG	EGR temperature sensor
No. 20	No. 1, 2 injector	VSV2	VSV (Air bleed)	BATT	Battery
–	–	–	–	+B	EFI main relay
G ⊖	Engine revolution sensor	*1 L1	ECT computer	ELS2	Accessory switch
VF	Service connector	*1 L3	ECT computer	+B1	EFI main relay
G1	Engine revolution sensor	*1 L2	ECT computer		
T	Service connector	*1 ECT1	ECT computer		

*1 : For A/T
*2 : For Calif.

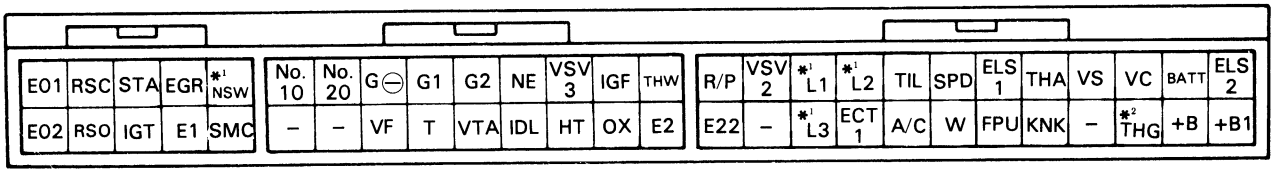

FI0574

Voltage at ECU wiring connectors

No.	Terminals	STD voltage	Condition		See page
1	+ B1 + B – E1	10 – 14	Ignition SW ON		FI-49
2	BATT – E1	10 – 14	—		FI-50
3	IDL – E2	M/T 4 – 5 A/T 10 – 14	Ignition SW ON	Throttle valve open	FI-51
	VTA – E2	0.1 – 1.0		Throttle valve fully closed	
		4 – 5		Throttle valve fully open	
	VC – E2	4 – 6		—	
4	VC – E2	4 – 6	Ignition SW ON	—	FI-53
	VS – E2	4 – 5		Measuring plate fully closed	
		0.02 – 0.5		Measuring plate fully open	
		2 – 4	Idling	—	
5	No. 10 – E01 No. 20 – E02	9 – 14	Ignition SW ON		FI-54
6	W – E1	9 – 14	No trouble (Check engine warning light off) and engine running		FI-55
7	THA – E2	1 – 3	Ignition SW ON	Intake air temperature 20°C (68°F)	FI-56
8	THW – E2	0.1 – 1.0	Ignition SW ON	Coolant temperature 80°C (176°F)	FI-57
9	STA – E1	6 – 14	Ignition SW ST position and press on the clutch pedal (M/T)		FI-58
10	IGT – E1	0.7 – 1.0	Idling		FI-59
11	RSC RSO – E1	9 – 14	Ignition SW ON		FI-60
12	A/C – E1	5 – 14	Air conditioning ON		FI-61

*1 : For A/T
*2 : For Calif.

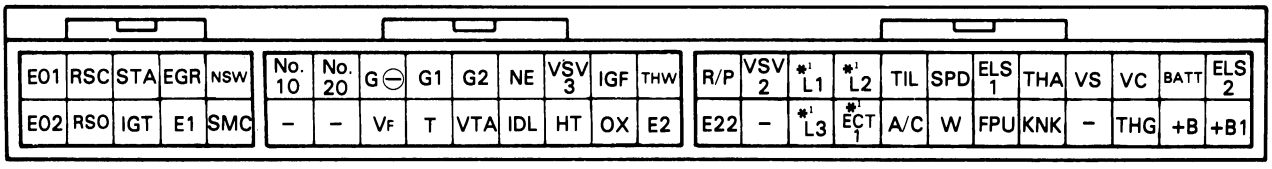

FI0574

TROUBLESHOOTING EFI ELECTRONIC CIRCUIT WITH VOLT/OHMMETER (4A-GE)

NOTE: The following troubleshooting procedures are designed for inspection of each separate system, and therefore the actual procedure may vary somewhat. However, troubleshooting should be performed by refering to the inspection methods described in this manual.

Before beginning inspection, it is best to first make a simple check of the fuses, fusible links and the condition of the connectors.

The following troubleshooting procedures are based on the supposition that the trouble lies in either a short or open circuit in a component outside the computer or a short circuit within the computer.

If engine trouble occurs even though proper operating voltage is detected in the computer connector, then the computer is faulty and should be replaced.

LOCATION OF FUSES AND FUSIBLE LINKS

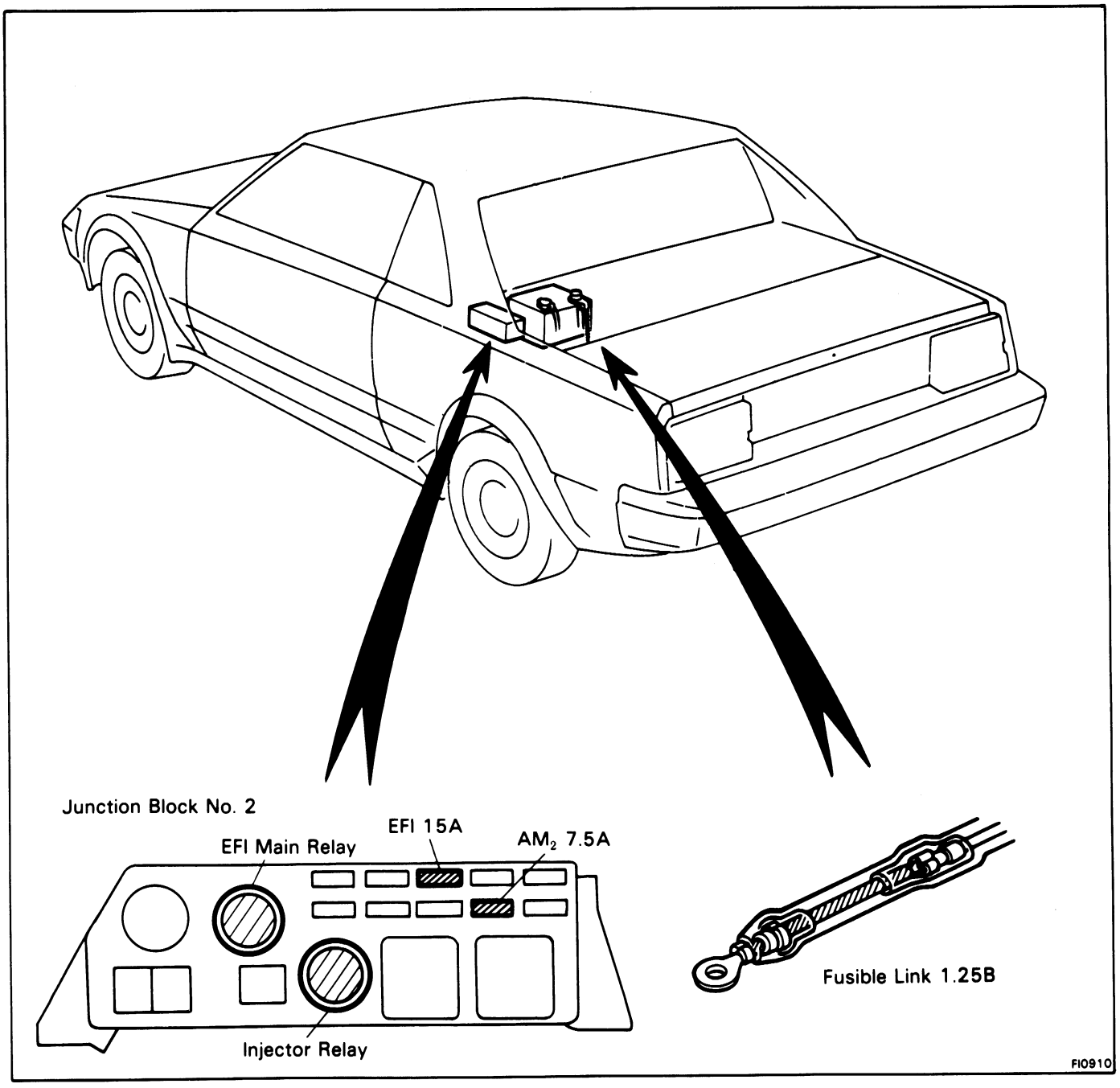

No.	Terminals	Trouble	Condition	STD Voltage
1	+B1 +B – E1	No voltage	Ignition switch ON	10 – 14 V

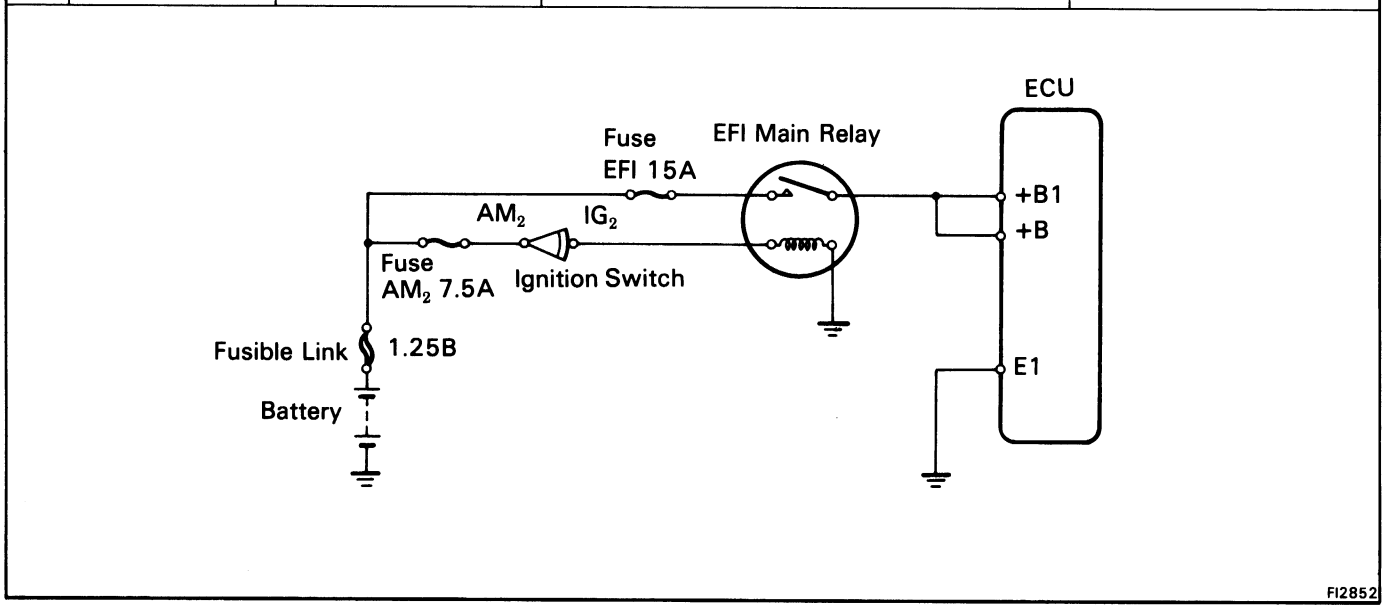

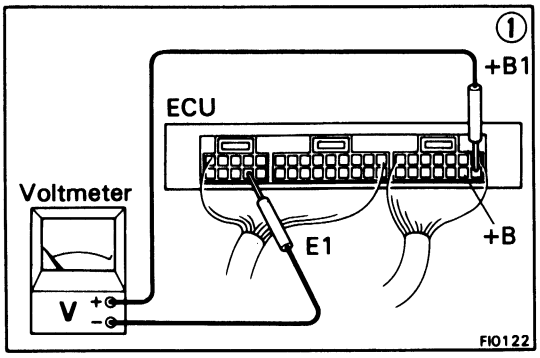

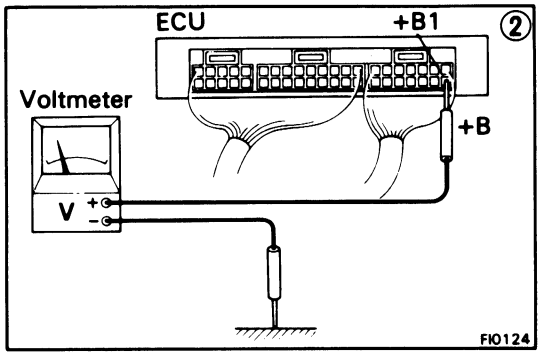

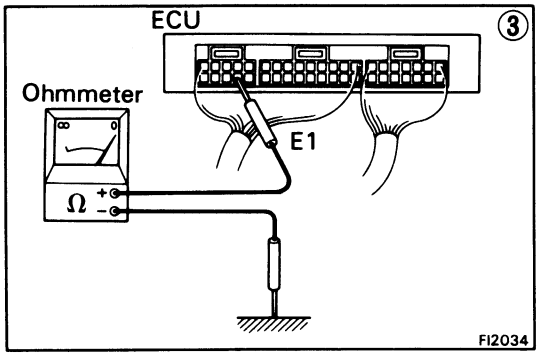

① There is no voltage between ECU terminals +B1 or +B and E1. **(IG SW ON)**

② Check that there is voltage between ECU terminals +B1 or +B and body ground. **(IG SW ON)**

NO → Check fuse, fusible link and wiring harness. → BAD → Repair or replace

OK → ③ Check wiring between ECU terminal E1 and body ground. → BAD → Repair or replace

OK → Check EFI main relay. → BAD → Replace

No.	Terminals	Trouble	Condition	STD Voltage
2	BATT – E1	No voltage	–	10 – 14 V

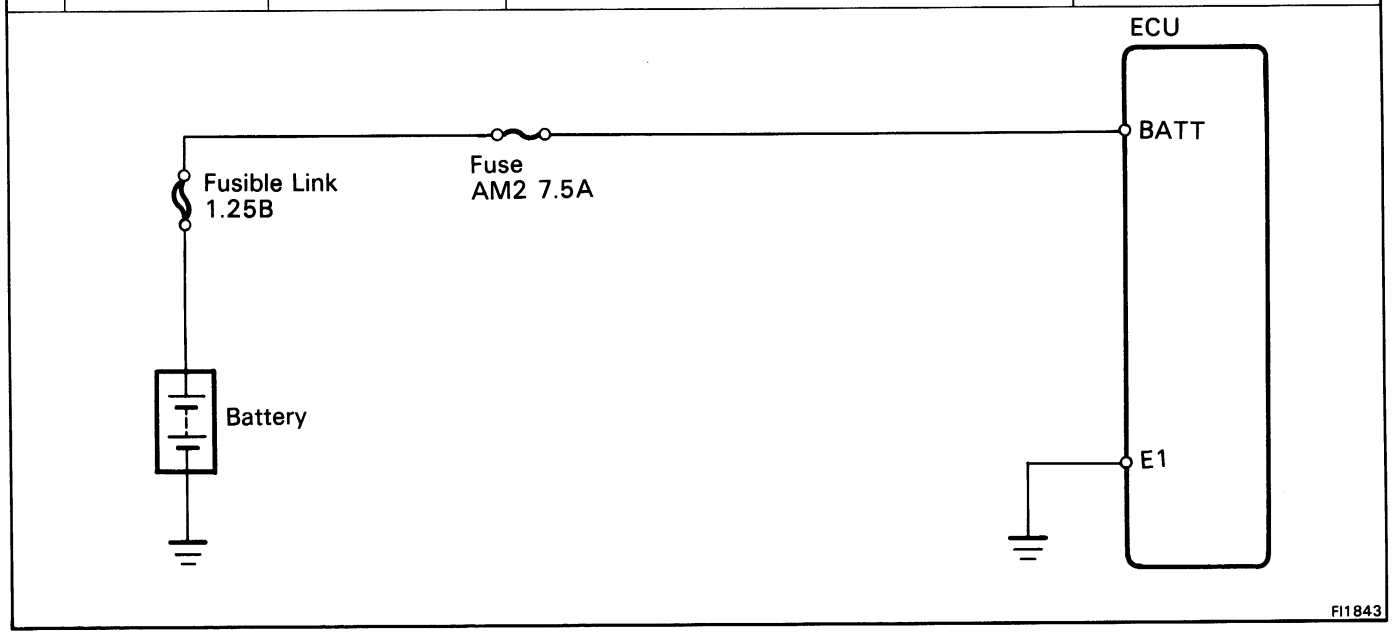

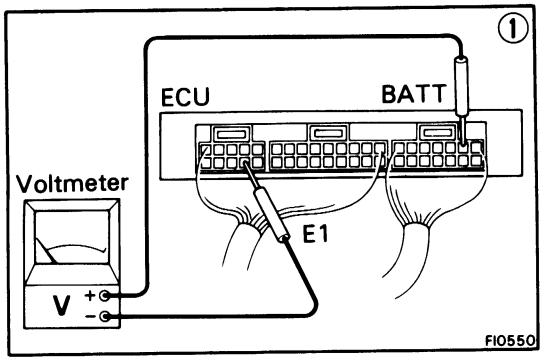

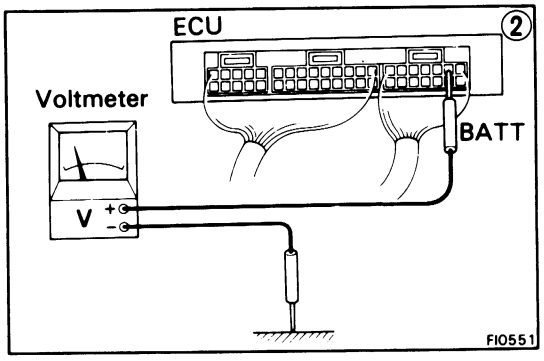

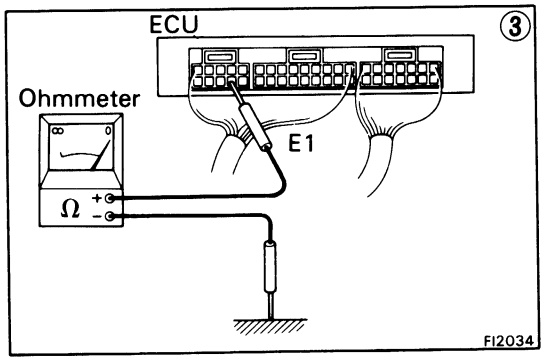

① There is no voltage between ECU terminals BATT and E1.

↓

② Check that there is voltage between ECU terminal BATT and body ground.

NO → Check fuse, fusible links and wiring harness. → NO → Repair

OK → ③ Check wiring between ECU terminal E1 and body ground.

BAD → Repair or replace

No.	Terminals	Trouble	Condition		STD Voltage
3	IDL – E2	No voltage	Ignition switch ON	Throttle valve open	M/T 4 – 5 V A/T 10 – 14 V
	VTA – E2			Throttle valve fully closed	0.1 – 1.0 V
				Throttle valve fully open	4 – 5 V
	VCC – E2			–	4 – 6 V

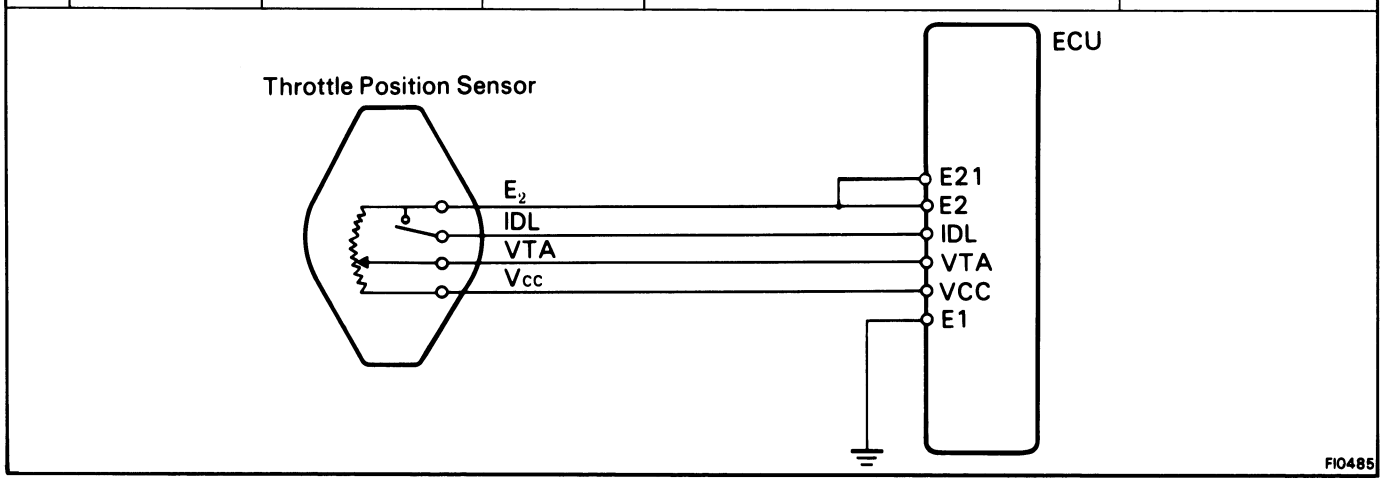

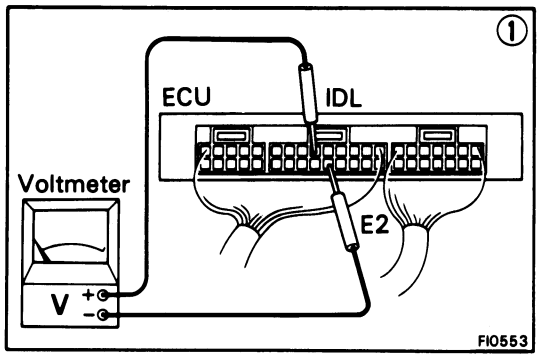

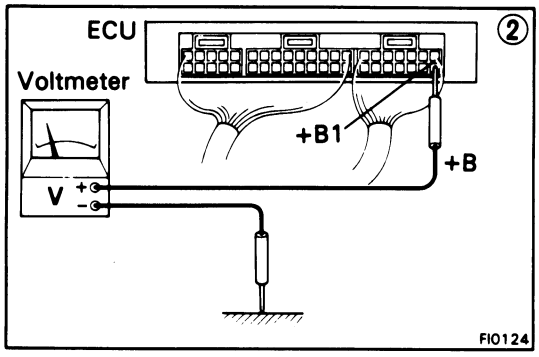

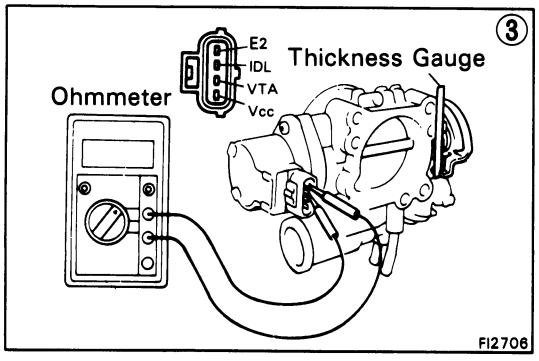

- **IDL ↔ E2**

① There is no voltage between ECU terminals IDL and E2. **(IG SW ON)** (Throttle valve open)

② Check that there is voltage between ECU terminal +B1 or +B and body ground. **(IG SW ON)**

- NO → Refer to No. 1 (See page FI-34)
- OK → Check wiring between ECU terminal E1 and body ground.
  - BAD → Repair or replace
  - OK → Refer to No. 1 (See page FI-34)

Refer to No. 1 (See page FI-34)
- BAD → Repair or replace
- OK → ③ Check throttle position sensor.
  - BAD → Repair or replace throttle position sensor.
  - OK → Check wiring between ECU and throttle position sensor.
    - BAD → Repair or replace
    - OK → Try another ECU

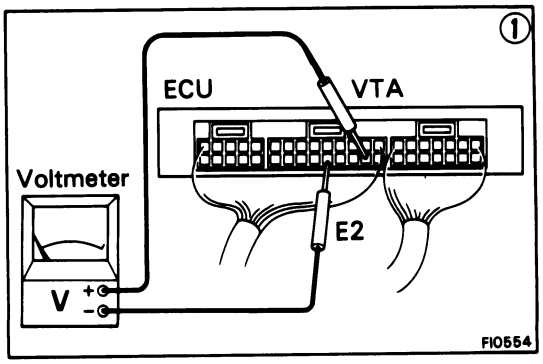

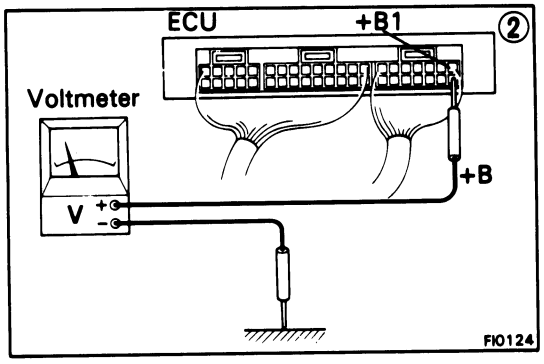

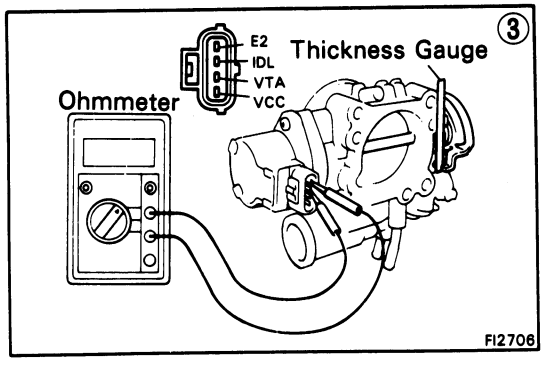

- **VTA ↔ E2**

① There is no specified voltage at ECU terminals VTA and E2. **(IG SW ON)**

↓

② Check that there is voltage between ECU terminal +B1 or +B and body ground. **(IG SW ON)**

- NO → Refer to No. 1 (See page FI-34)
- OK → Check wiring between ECU terminal E1 and body ground.
  - BAD → Repair or replace

Refer to No. 1 (See page FI-34)
- BAD → Repair or replace
- OK ↓

③ Check throttle position sensor.
- BAD → Repair or replace
- OK ↓

Check wiring between ECU and throttle position sensor.
- BAD → Repair or replace
- OK ↓

Try another ECU.

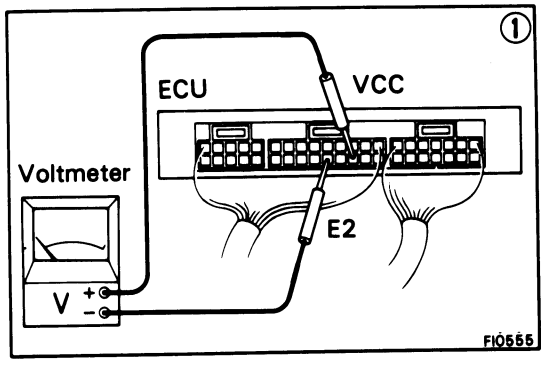

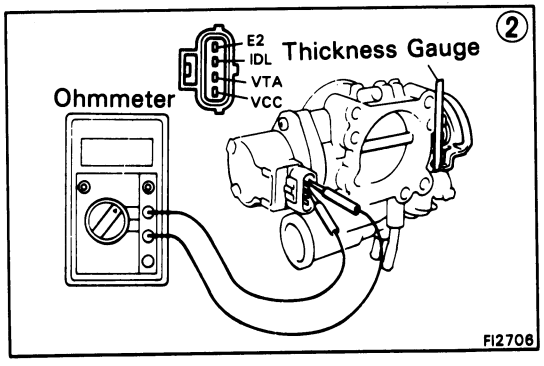

- **VCC ↔ E2**

① There is no voltage between ECU terminals VCC and E2. **(IG SW ON)**

↓

Check that there is voltage between ECU terminal +B1 or +B and body ground. **(IG SW ON)**

- NO → Refer to No. 1. (See page FI-34)
- OK ↓

② Check throttle position sensor.
- BAD → Repair or replace
- OK ↓

Check wiring between ECU and throttle position sensor.
- OK → Try another ECU.
- BAD → Repair or replace wiring.

No.	Terminals	Trouble	Condition		STD Voltage
4	+B1 – E2	No voltage	Ignition switch ON	–	10 – 14V
	VC – E2			–	6 – 10V
	VS – E2			Measuring plate fully closed	2 – 5.5V
				Measuring plate fully open	6 – 9V
			Idling	–	2 – 8V

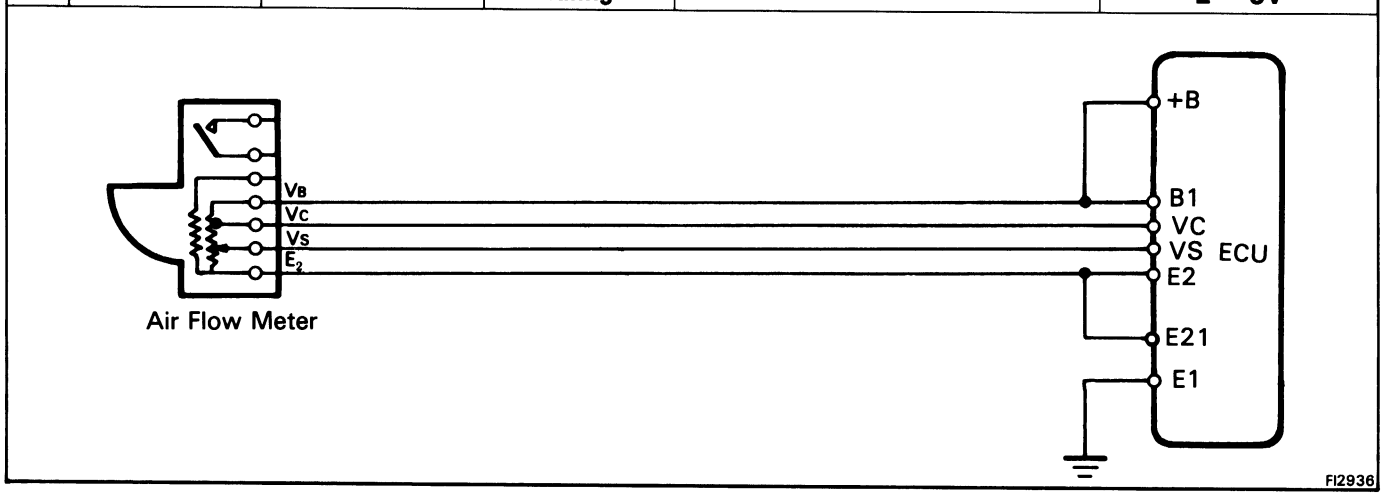

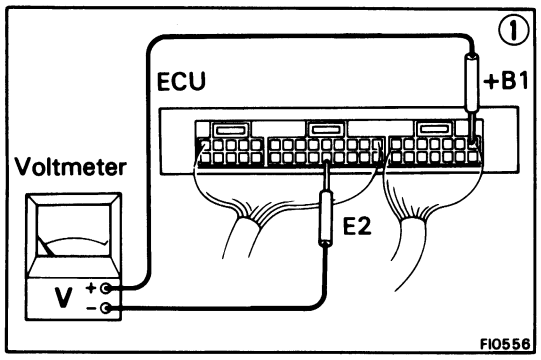

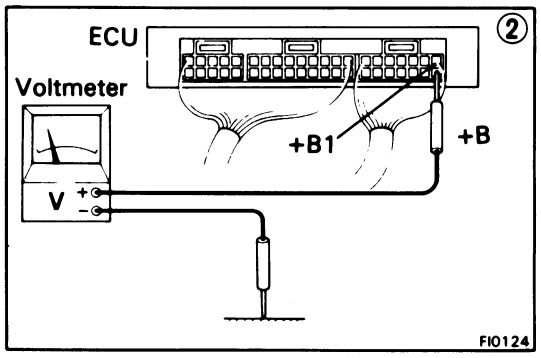

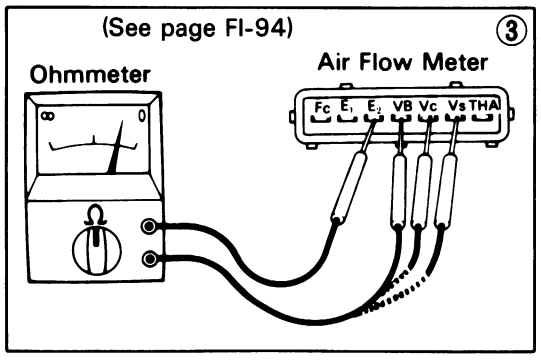

• +B1 ↔ E2

① There is no voltage between computer terminals +B1 and E2. **(IG SW ON)**

↓

② Check the that there is voltage between computer terminal +B and body ground. **(IG SW ON)**

NO → Refer to No. 1. (See page FI-34)

OK → Try another computer.

• VC – E2, VS – E2

There is no specified voltage at computer terminals VC and VS. **(IG SW ON)**

↓

① Check that there is voltage between computer terminals +B1 and E2. **(IG SW ON)**

OK → ③ Check air flow meter.

NO → Refer to No. 1 (See page FI-34)

③ Check air flow meter.

NO → Repair or replace air flow meter.

OK → Check wiring between computer and air flow meter.

No.	Terminals	Trouble	Condition	STD Voltage
5	No. 10 – E01 No. 20 – E02	No voltage	Ignition switch ON	9 – 14V

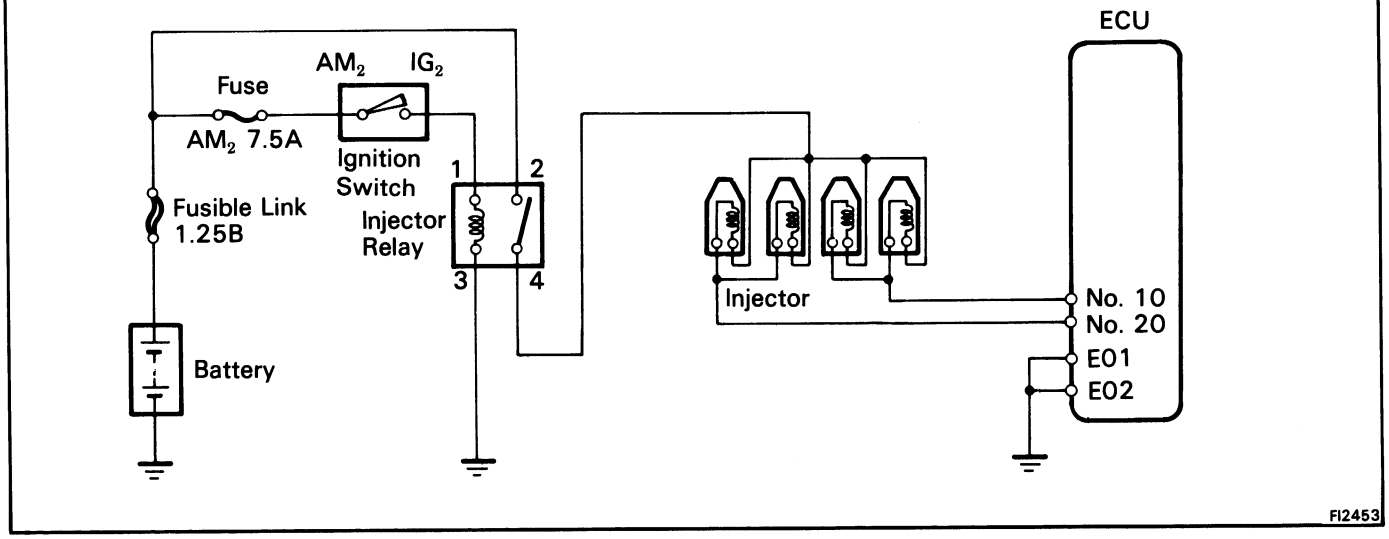

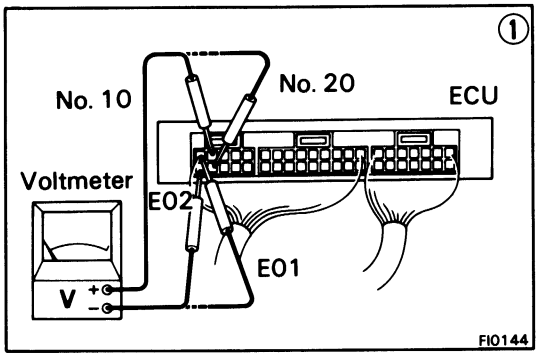

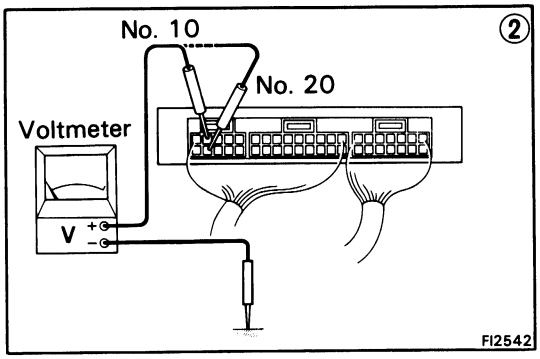

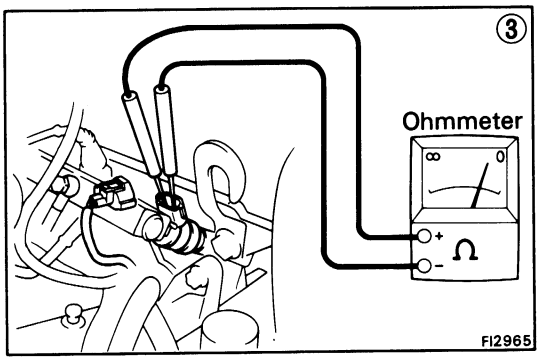

① No voltage between ECU terminals No. 10 and/or No. 20 and E01 and/or E02. **(IG SW ON)**

↓

② Check that there is voltage between ECU terminal No. 10 and/or No. 20 and body ground.

- NO → Check fuse, fusible link, ignition switch and starter relay.
- OK → Check wiring between ECU terminal E01 and/or E02 and body ground.
  - OK → Try another ECU.
  - BAD → Repair or replace.

Check fuse, fusible link, ignition switch and starter relay.
- BAD → Repair or replace.
- OK ↓

③ Check resistance of magnetic coil in each injector.
STD resistance: Approx. 13.8 Ω
- OK ↓
- BAD → Replace injector.

Check wiring between ECU terminal No. 10 and/or No. 20 and battery.
- BAD → Repair or replace.

No.	Terminals	Trouble	Condition	STD Voltage
6	W – E1	No voltage	No trouble (check engine warning light off) and engine running.	9 – 14V

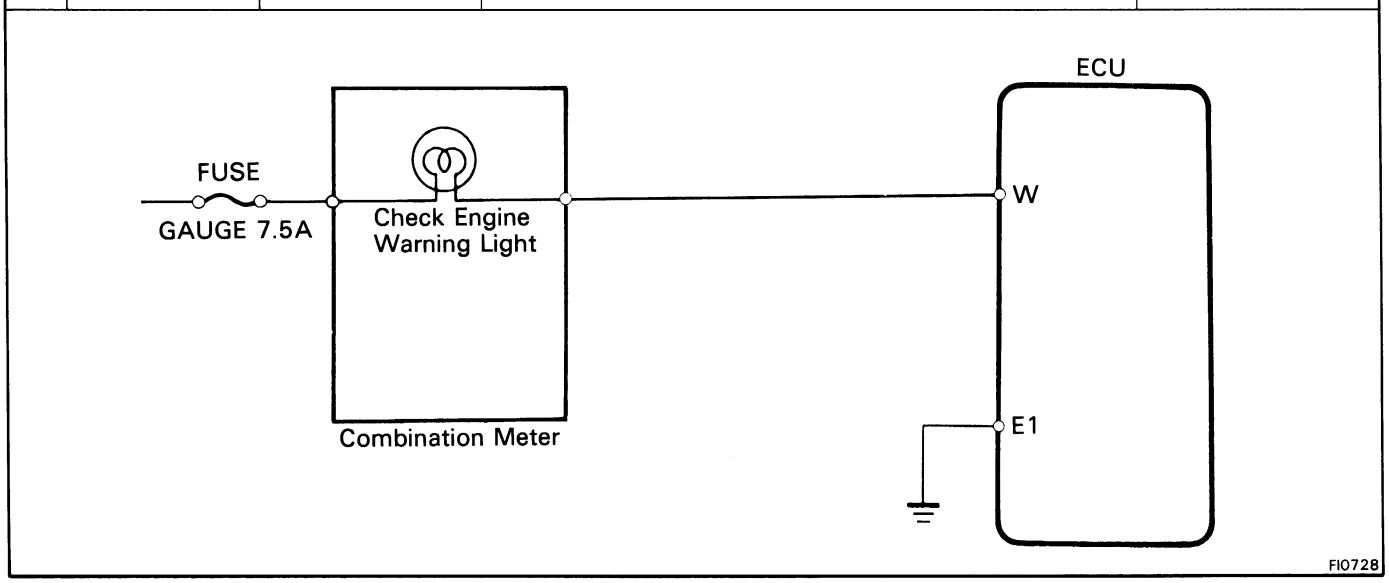

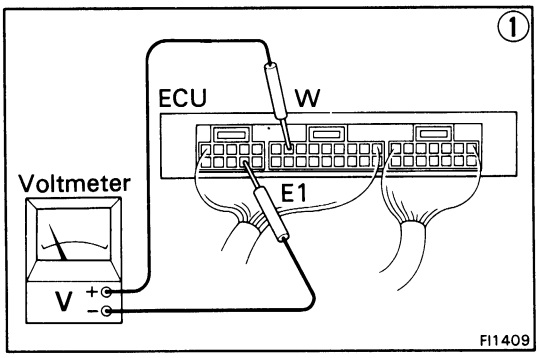

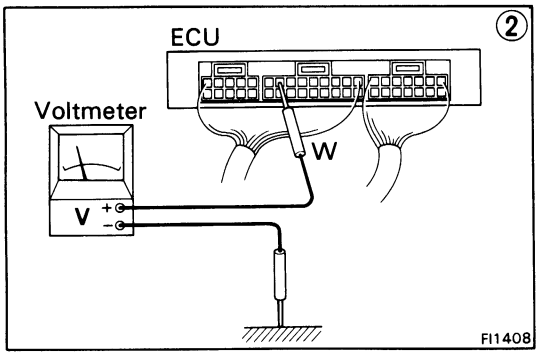

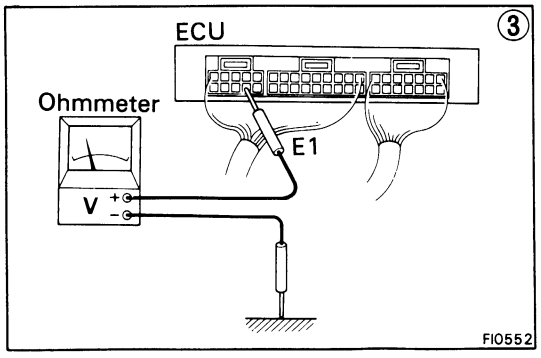

① No voltage between ECU terminals W and E1. **(Idling)**

② Check that there is voltage between ECU terminal W and body ground.

- NO → Check fuse and check engine warning light.
- OK → ③ Check wiring between ECU terminal E1 and body ground.
  - OK → Tray another ECU.
  - BAD → Repair or replace.

Check fuse and check engine warning light.

- OK → Check wiring between ECU terminal W and fuse.
- BAD → Try another ECU.
  - Fuse blows again → Check wiring between ECU terminal W and fuse.
  - Check wiring between ECU terminal W and fuse. BAD → Repair or replace.

No.	Terminals	Trouble	Condition		STD voltage
7	THA – E2	No voltage	Ignition switch ON	Intake air temperature 20°C (68°F)	1 – 3 V

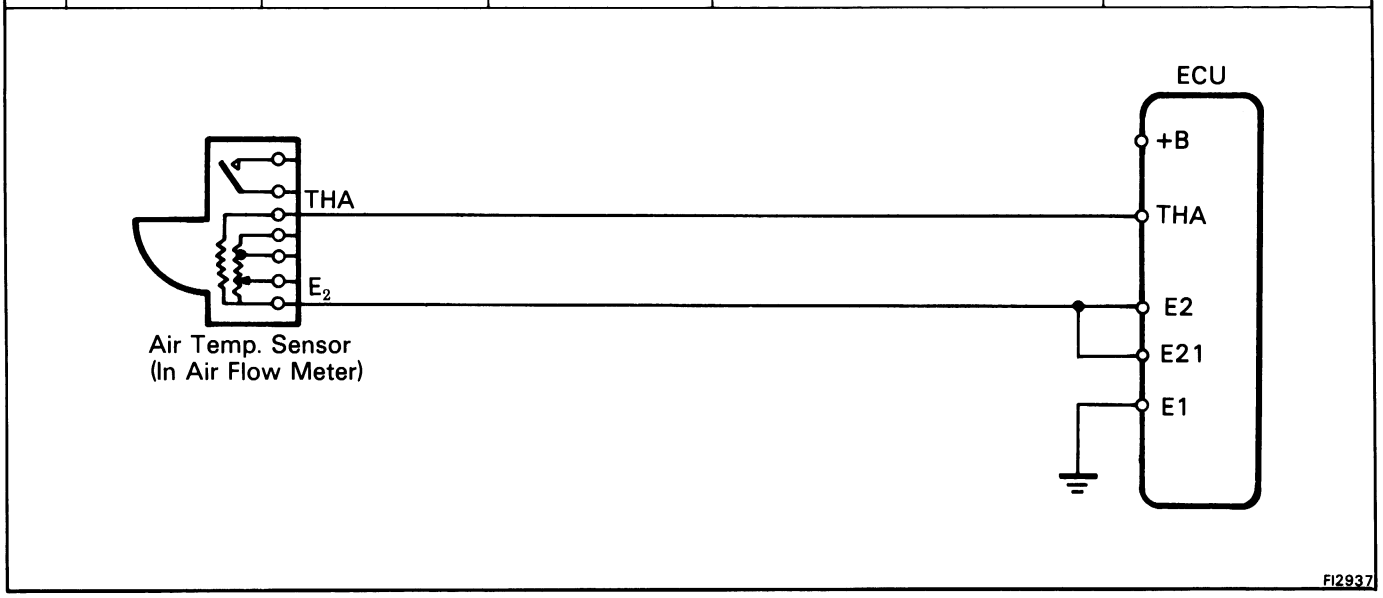

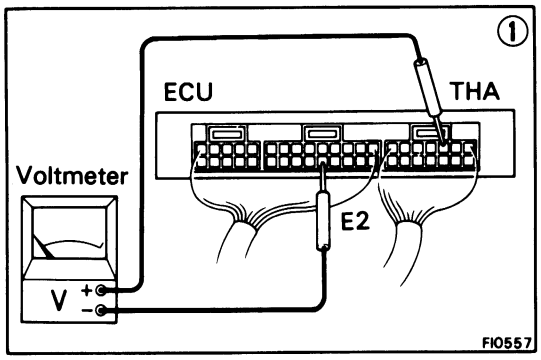

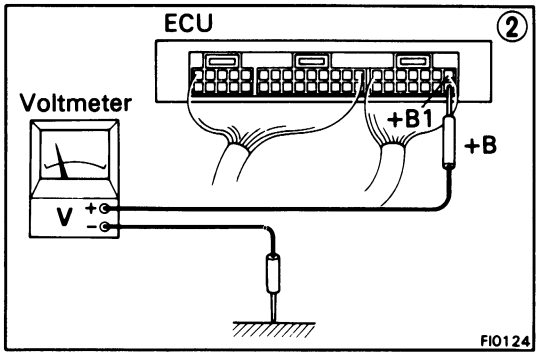

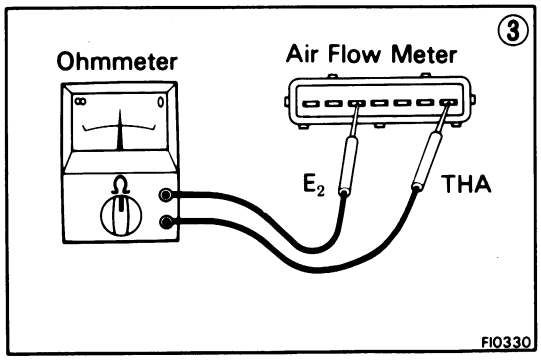

① There is no specified voltage between ECU terminals THA and E2. **(IG SW ON)**

↓

② Check that there is voltage between ECU terminal +B1 or +B and body ground. **(IG SW ON)**

- OK → ③ Check air temp. sensor.
  - BAD → Replace air temp. sensor.
  - OK → Check wiring between ECU and air temperature sensor.
    - OK → Try another ECU.
    - BAD → Repair or replace wiring.
- NO → Refer to No. 1. (See page FI-34)

No.	Terminals	Trouble	Condition		STD Voltage
8	THW – E2	No voltage	Ignition switch ON	Coolant temperature 80°C (176°F)	0.1 – 1.0 V

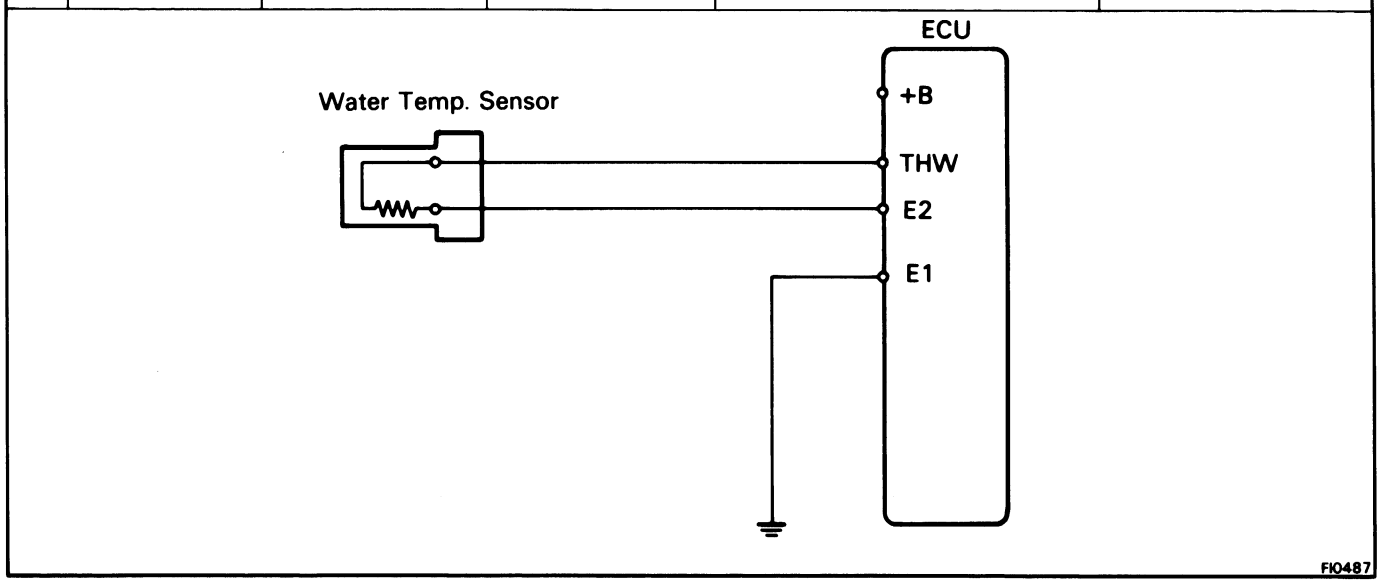

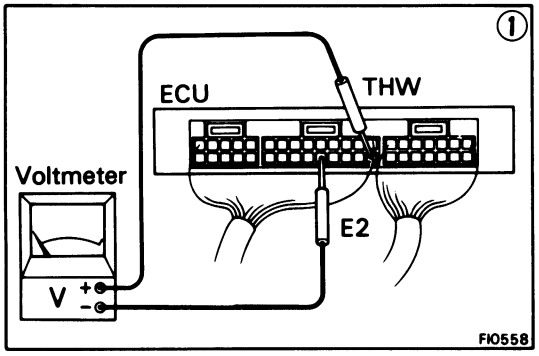

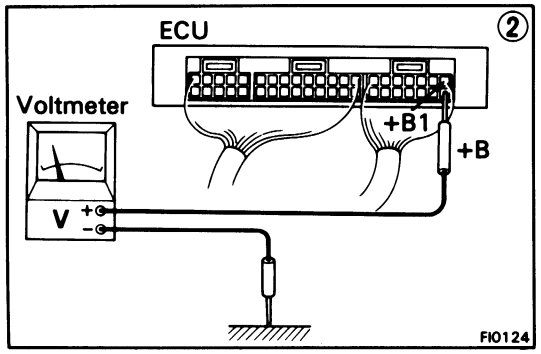

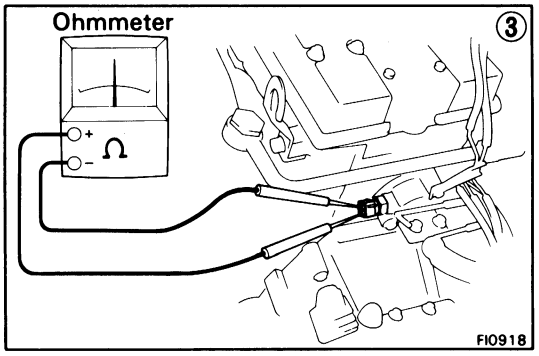

① There is no specified voltage between ECU terminals THW and E2. **(IG SW ON)**

↓

② Check that there is voltage between ECU terminal +B1 or +B and body ground. **(IG SW ON)**

- OK → ③ Check water temp. sensor.
  - BAD → Replace water temp. sensor.
  - OK → Check wiring between ECU and air temp. sensor.
    - OK → Try another ECU.
    - BAD → Repair or replace wiring.
- NO → Refer to No. 1. (See page FI-34)

No.	Terminals	Trouble	Condition	STD Voltage
9	STA – E1	No voltage	Ignition switch ST position	6 – 14 V

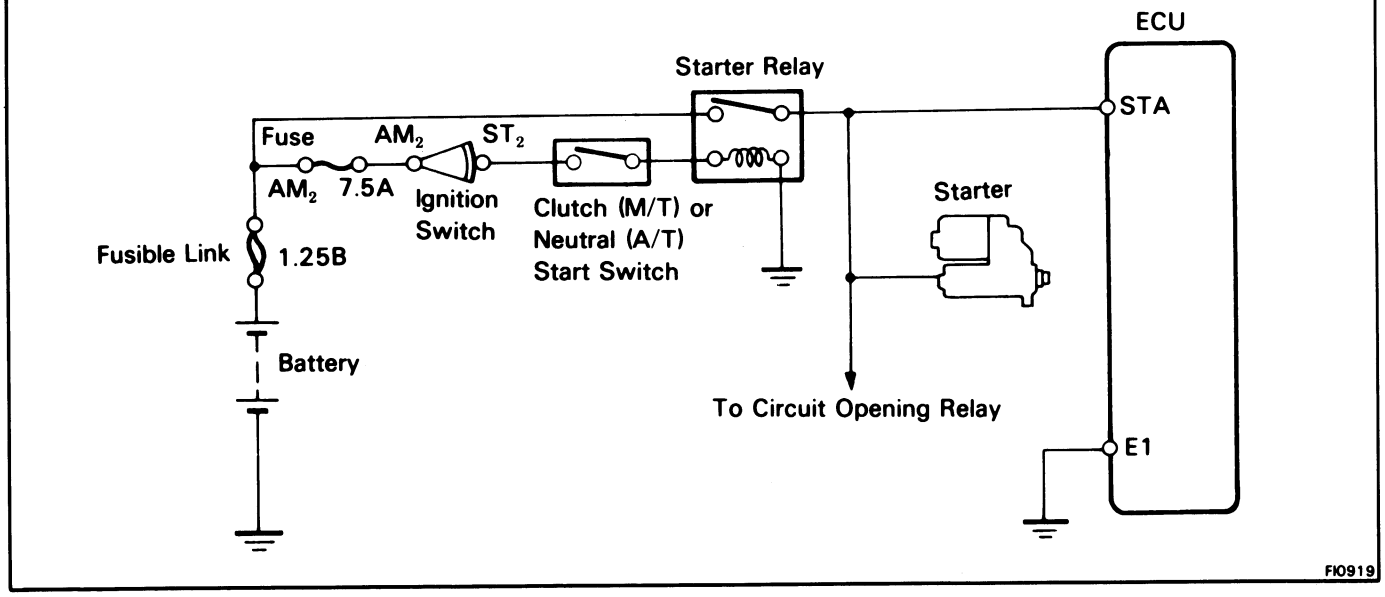

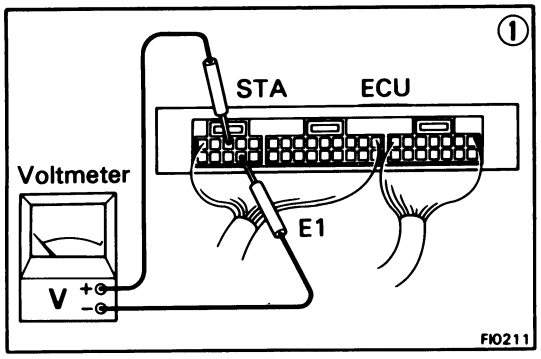

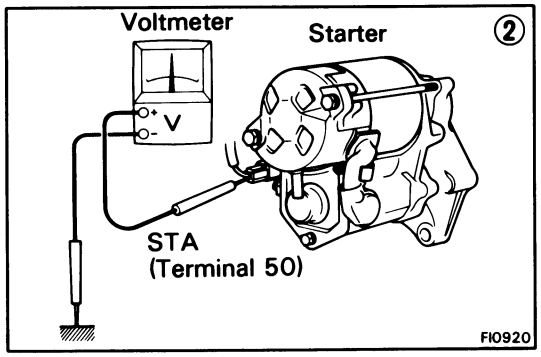

① There is no voltage between ECU terminals STA and E1. **(IG SW ON)**

Check starter operation. — OK → Check wiring between ECU and starter terminal 50.

- BAD → Check fusible link, battery, wiring ignition switch, starter relay and clutch start switch.
- OK → Check wiring between ECU terminal E1 and body ground.
  - BAD → Repair or replace
- BAD → Repair or replace

Check fusible link, battery, wiring ignition switch, starter relay and clutch start switch. — BAD → Repair or replace

OK →

② Check that there is voltage at STA (50) terminal of starter. **(IG SW ST) STD voltage: 6 – 14V**

- OK → Check Starter
- NO → Check wiring between ignition switch ST terminal and starter STA (50) terminal.

No.	Terminals	Trouble	Condition	STD Voltage
10	IGT – E_1	No voltage	Idling	0.7 – 1.0 V

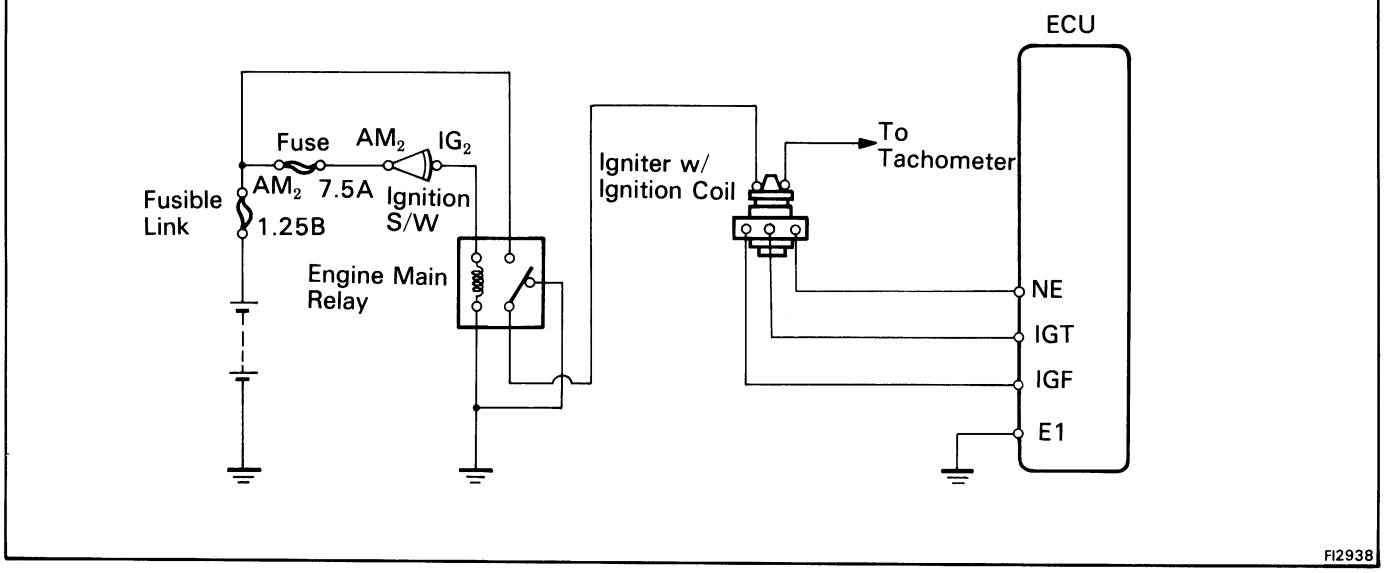

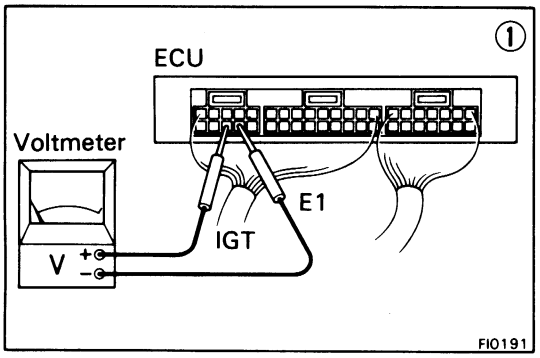

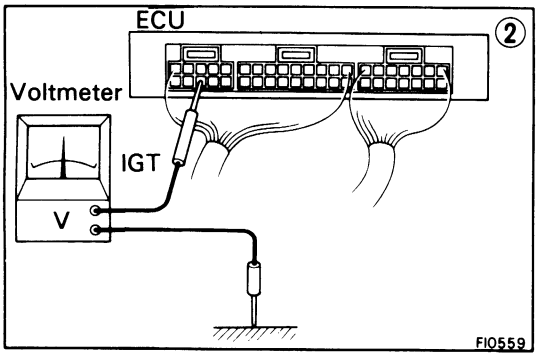

① There is no voltage between ECU terminal IGT and E1. (Idling)

↓

② Check that there is voltage between ECU terminal IGT and body ground. (Idling)

- NO → Refer to No. 1 (See page FI-34)
- OK → Check wiring between ECU terminal E1 and body ground.
  - BAD → Repair or replace
  - OK → Refer to No. 1 (See page FI-34)

Refer to No. 1 (See page FI-34)
- BAD → Repair or replace
- OK ↓

Check wiring between ECU and distributor.
- BAD → Repair or replace
- OK ↓

Check distributor.
- BAD → Replace
- OK ↓

Check wiring between ECU and Igniter.
- BAD → Repair or replace
- OK ↓

Check igniter. (See page IG-4)
- BAD → Repair or replace
- OK ↓

Try another ECU.

No.	Terminals	Trouble	Condition	STD Voltage
11	A/C – E1	No voltage	Air conditioning ON	5 – 14 V

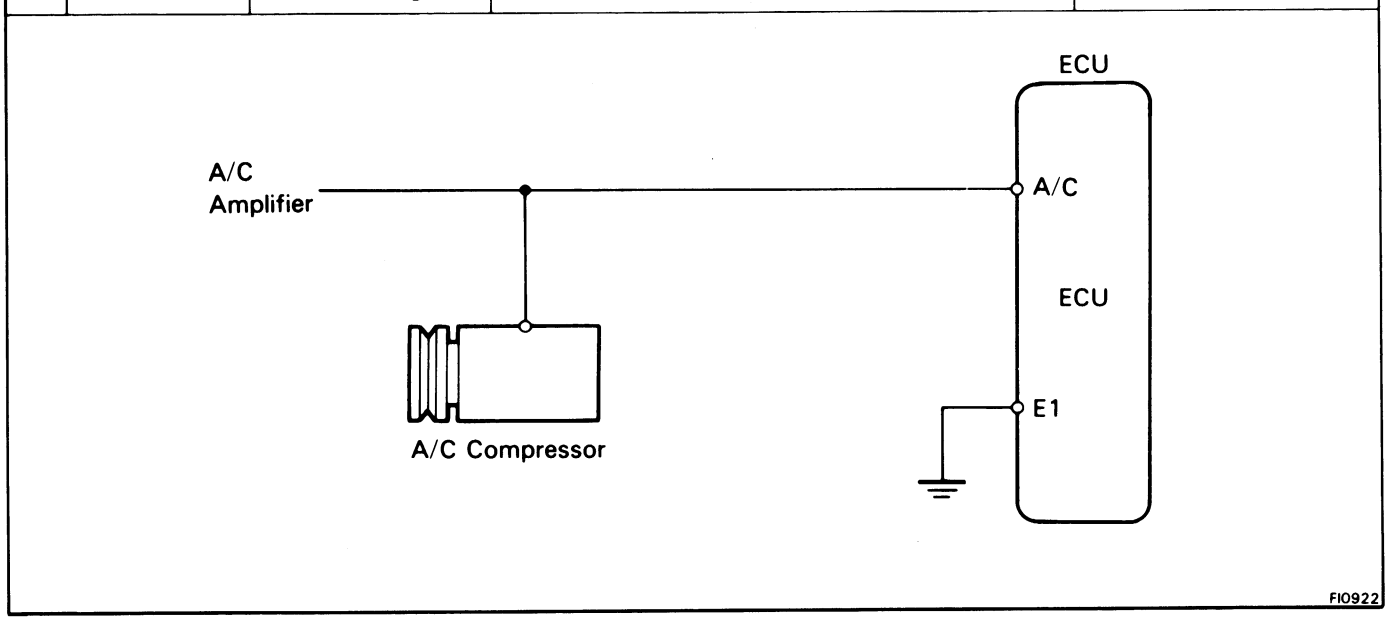

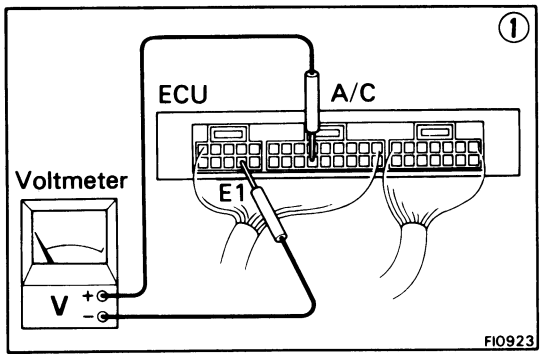

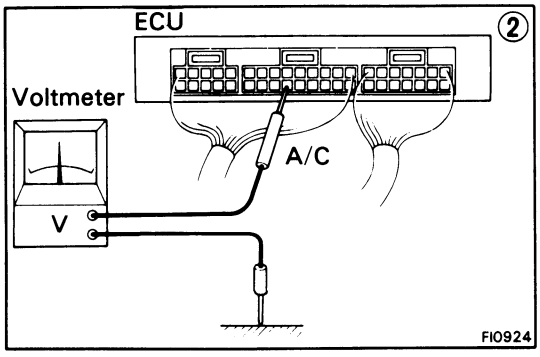

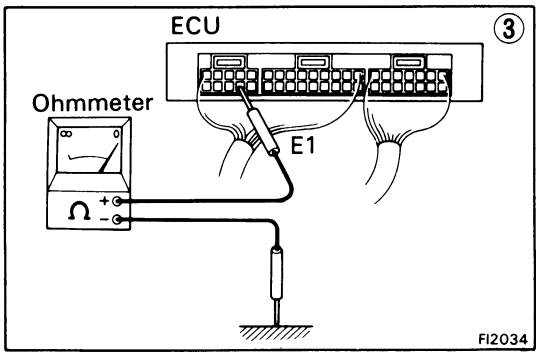

① There is no voltage between ECU terminals A/C and E1. **(Air conditioning ON)**

② Check that there is voltage between ECU terminal A/C and body ground.

- NO → Check compressor running
- OK → ③ Check wiring between ECU E1 and body ground.
  - OK → Try another ECU
  - BAD → Repair or replace

Check compressor running
- OK → Check wiring between ECU terminal A/C and amplifier.
  - BAD → Repair or replace
- BAD → Check that there is voltage between amplifier terminal and body ground.
  - BAD → Repair or replace
  - OK → Check wiring between amplifier and ECU or compressor.
    - BAD → Repair or replace

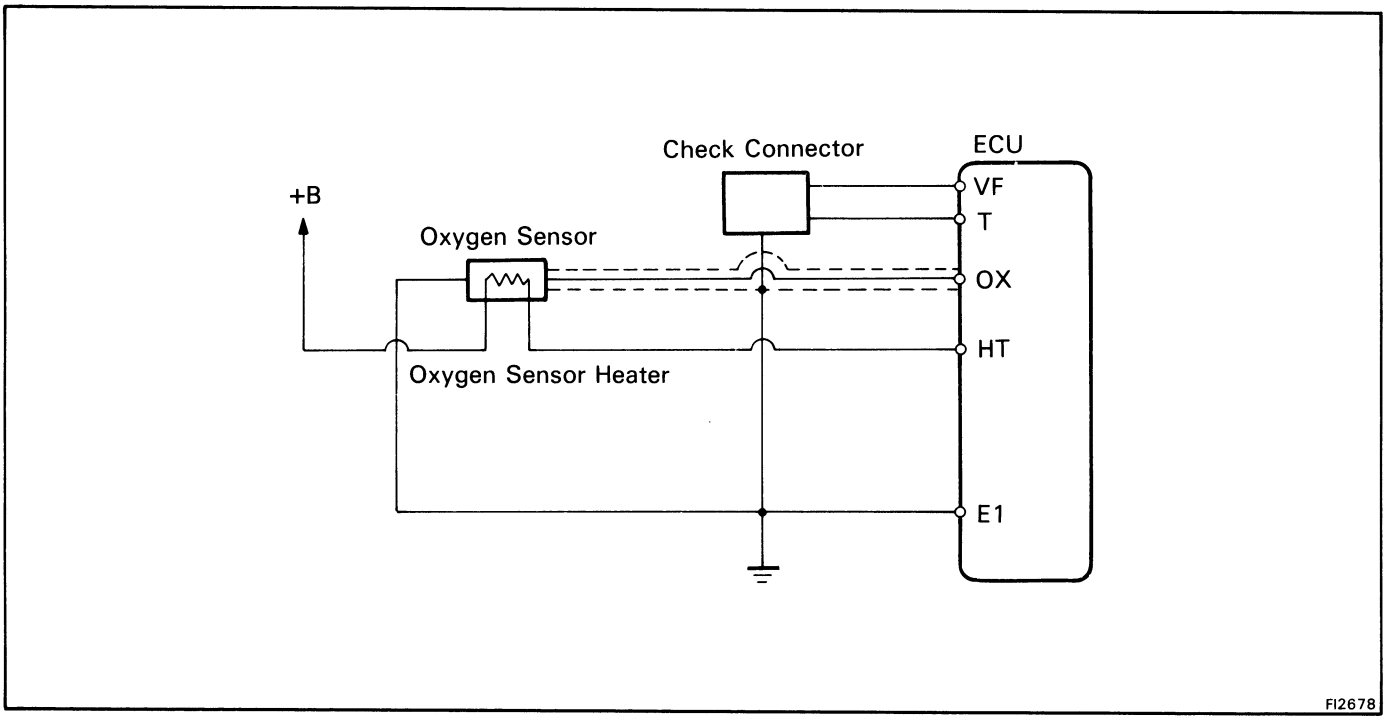

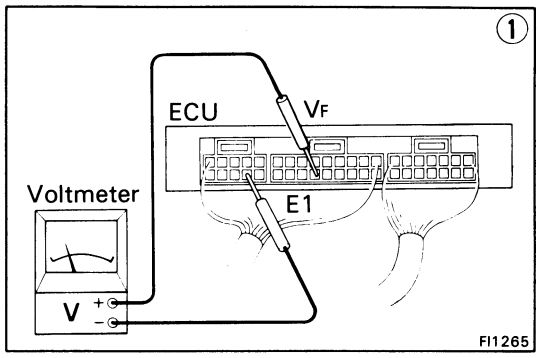

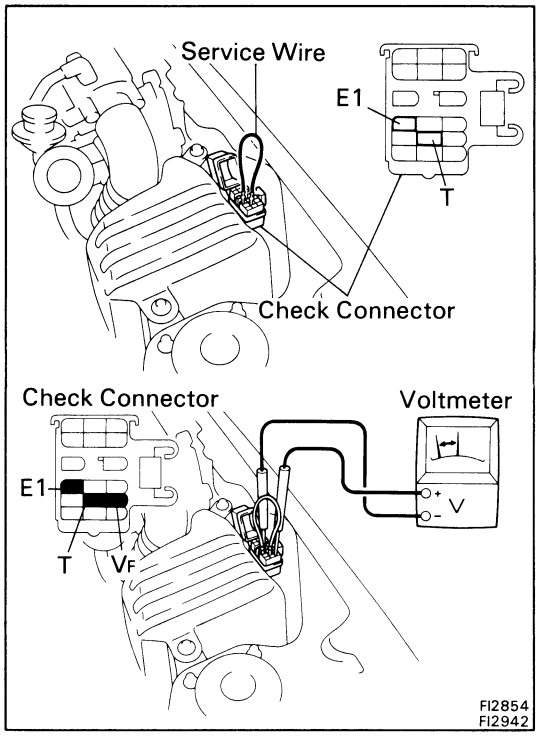

① There is no voltage between ECU terminals VF and E1.

Check that there is voltage between ECU terminal VF and body ground.

- NO → Is air leaking into air intake system?
- OK → Check wiring between ECU terminal E1 and body ground.
  - OK → Try another ECU.
  - BAD → Repair or replace.

Is air leaking into air intake system?
- BAD → Repair air leak.
- OK ↓

Check spark plugs.
- BAD → Repair or replace.
- OK ↓

Check distributor and ignition system.
- BAD → Repair or replace.
- OK ↓

Check fuel pressure.
- BAD → Repair or replace.
- OK ↓

Check injector.
- BAD → Repair or replace.
- OK ↓

Check cold start injector. *
- BAD → Repair or replace.
- OK ↓

Check air flow meter.
- BAD → Repair or replace.
- OK ↓

② Check operation of oxygen sensor.
- OK → System normal.
- BAD ↓

Check wiring between oxygen sensor and ECU connector.
- BAD → Repair wiring.
- OK ↓

Replace oxygen sensor.

* Rich malfunction only

California

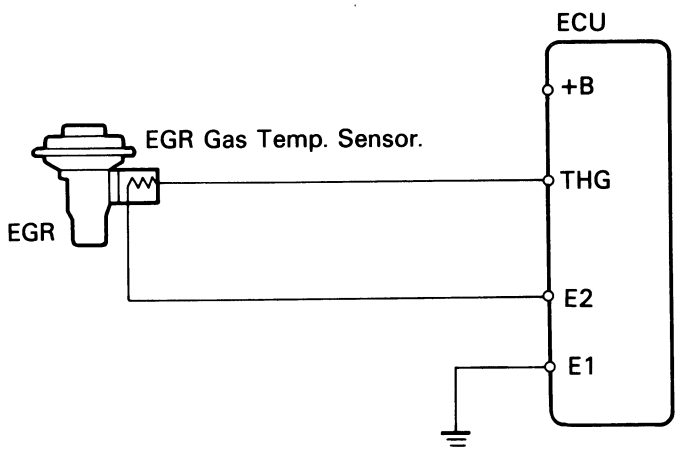

FI2680

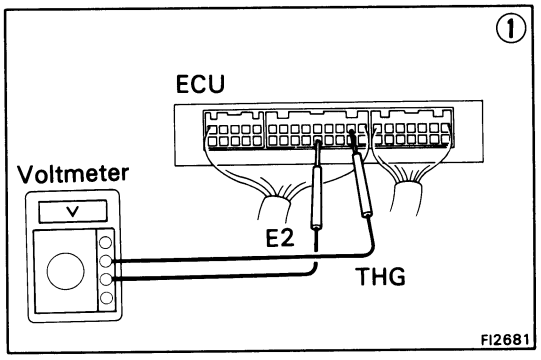

FI2681

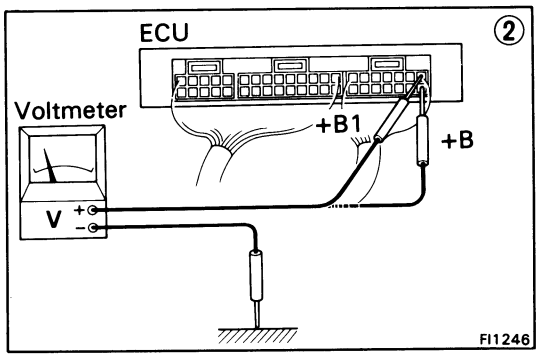

FI1246

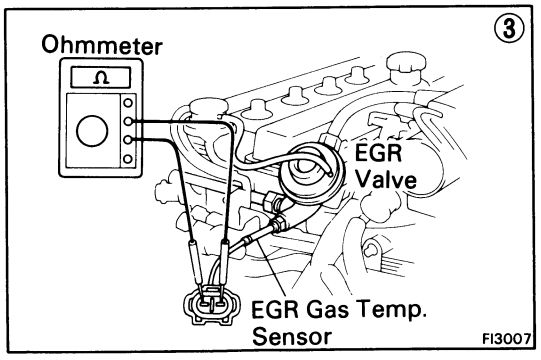

FI3007

① No voltage between ECU terminals THG and E2.
(Engine running at 2,000 rpm)

↓

② Check that there is voltage between ECU terminal +B or +B1 and body ground. (IG SW ON)

- NO → Refer to No. 1 (See page FI-34)
- OK ↓

Check wiring between ECU terminal E1 and body ground.

- BAD → Repair or replace.
- OK ↓

Check EGR system.

- BAD → Repair or replace.
- OK ↓

③ Check EGR gas temp. sensor.

- BAD → Replace EGR gas temp. sensor.
- OK ↓

Check wiring between ECU and EGR gas temp. sensor.

- BAD → Repair or replace.
- OK → Try another ECU.

TROUBLESHOOTING EFI ELECTRONIC CIRCUIT WITH VOLT/OHMMETER (4A-GZE)

NOTE: The following troubleshooting procedures are designed for inspection of each separate system, and therefore the actual procedure may vary somewhat. However, troubleshooting should be performed by refering to the inspection methods described in this manual.

Before beginning inspection, it is best to first make a simple check of the fuses, fusible links and the condition of the connectors.

The following troubleshooting procedures are based on the supposition that the trouble lies in either a short or open circuit in a component outside the computer or a short circuit within the computer.

If engine trouble occurs even though proper operating voltage is detected in the computer connector, then the computer is faulty and should be replaced.

LOCATION OF FUSES AND FUSIBLE LINKS

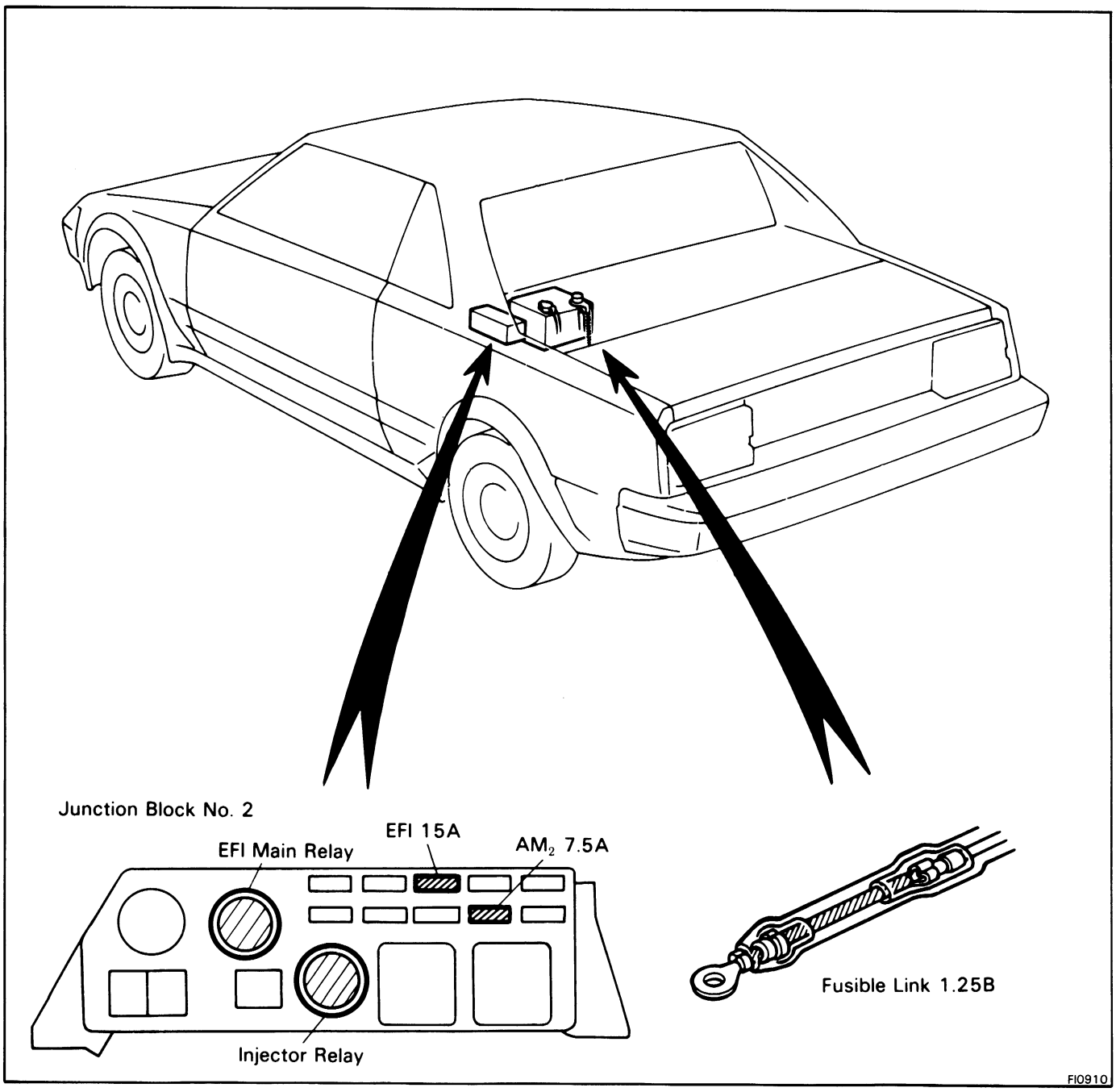

No.	Terminals	Trouble	Condition	STD Voltage
1	+B1 +B – E1	No voltage	Ignition switch ON	10 – 14 V

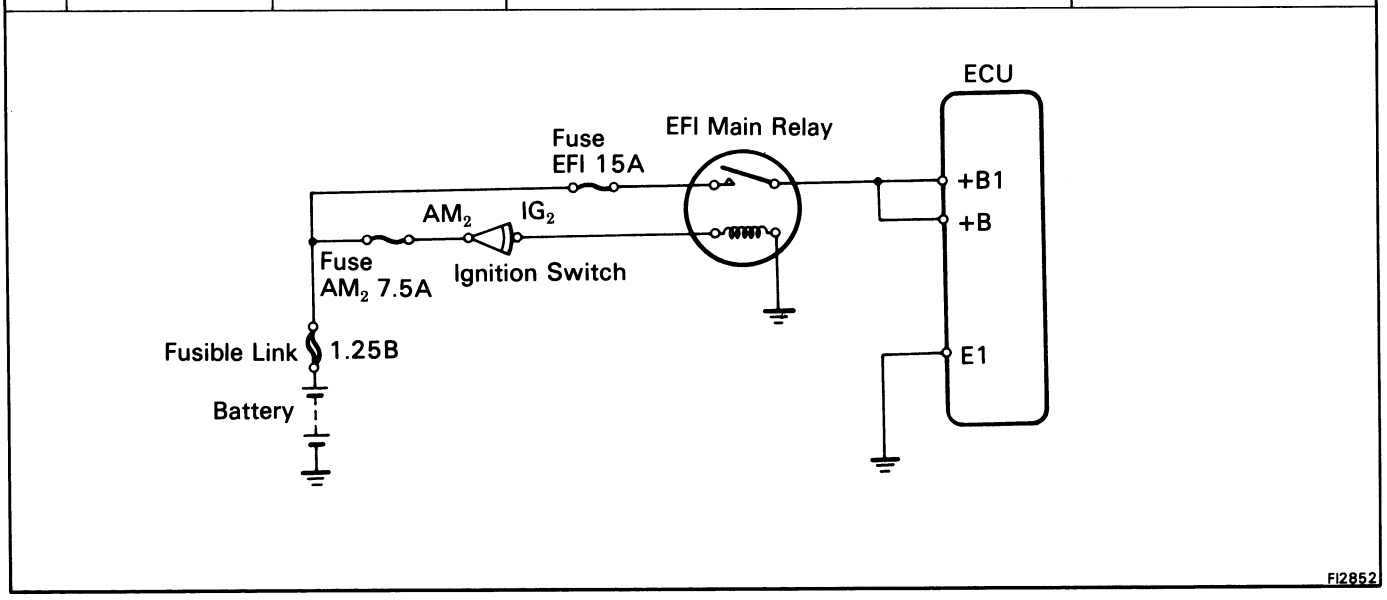

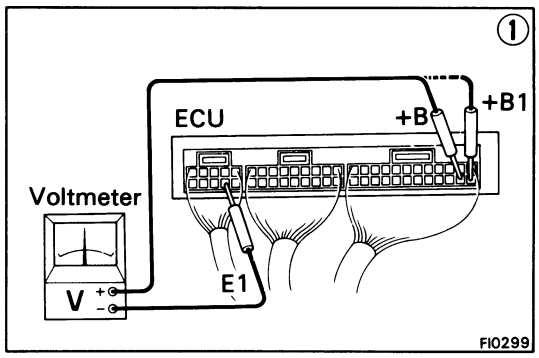

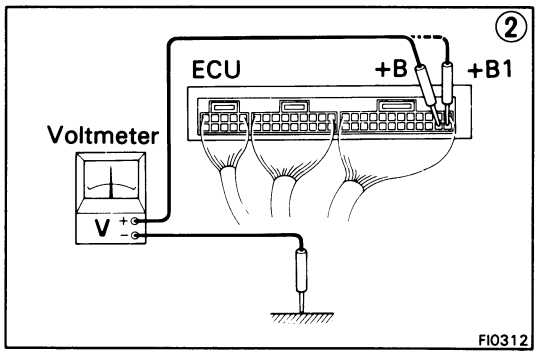

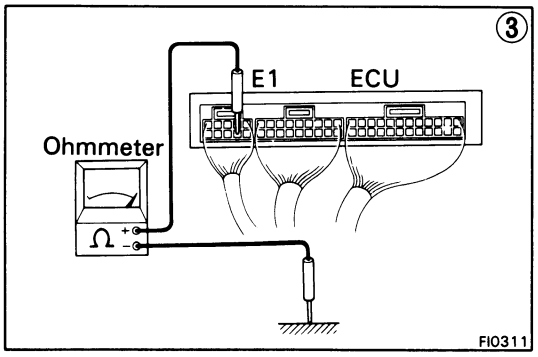

① There is no voltage between ECU terminal +B1 or +B and E1. **(IG SW ON)**

↓

② Check that there is voltage between ECU terminals +B1 or +B and body ground. **(IG SW ON)**

- NO → Check fuse, fusible link and wiring harness.
- OK → ③ Check wiring between ECU terminal E1 and body ground
  - BAD → Repair or replace

Check fuse, fusible link and wiring harness.
- BAD → Repair or replace
- OK → Check EFI main relay.
  - BAD → Replace

No.	Terminals	Trouble	Condition	STD Voltage
2	BATT – E1	No voltage	–	10 – 14 V

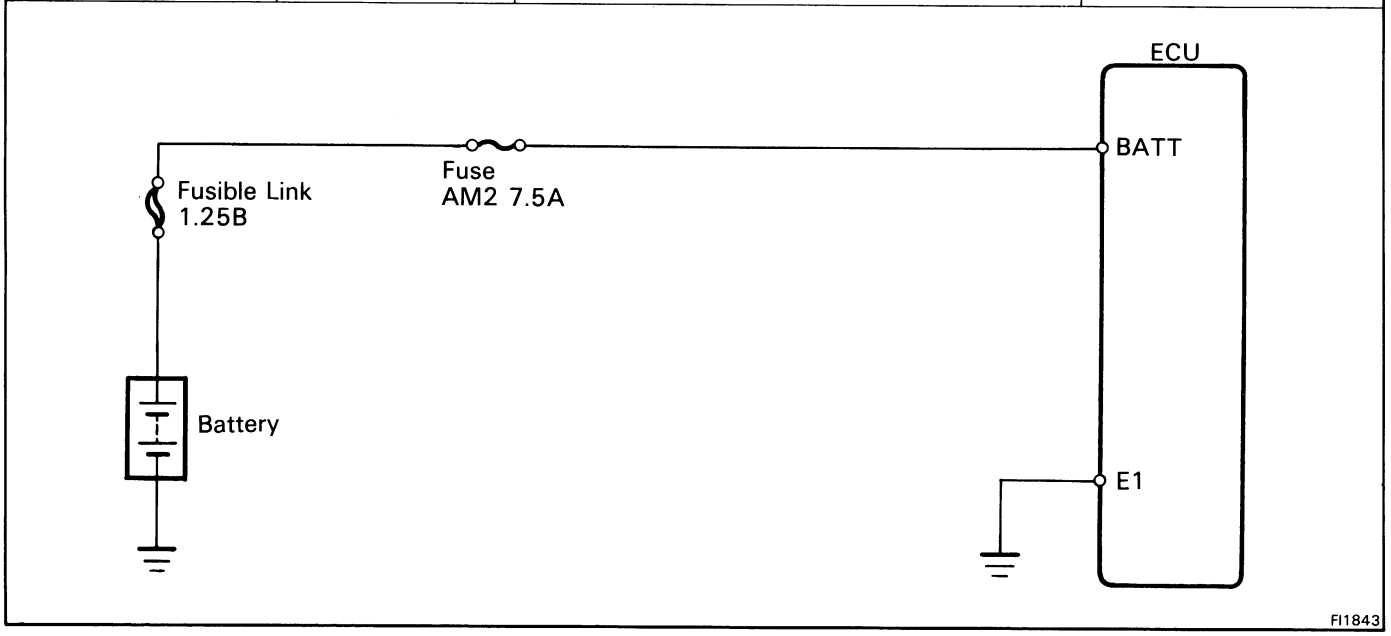

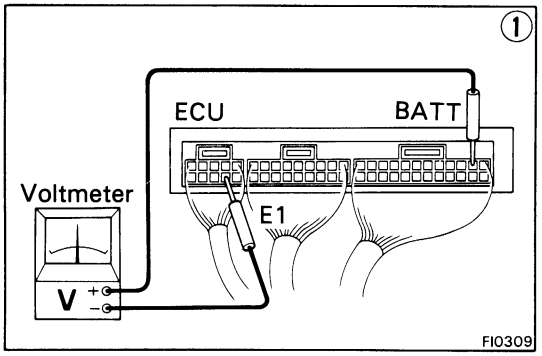

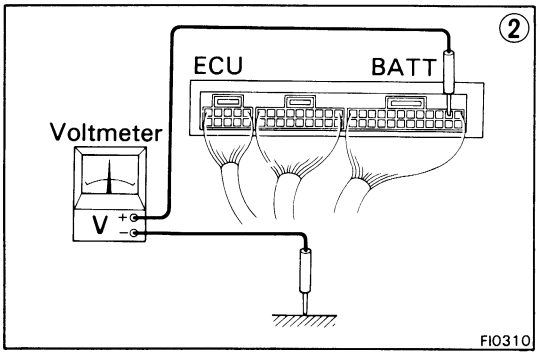

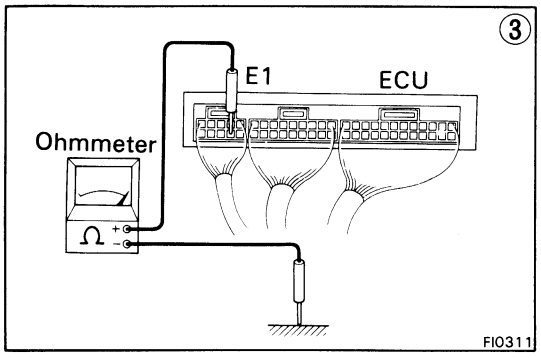

① There is no voltage between ECU terminals BATT and E1.

↓

② Check that there is voltage between ECU terminal BATT and body ground.

NO → Check fuse, fusible links and wiring harness. → NO → Repair

OK ↓

③ Check wiring between ECU terminal E1 and body ground.

BAD ↓

Repair or replace

No.	Terminals	Trouble	Condition		STD Voltage
3	IDL – E2	No voltage	Ignition switch ON	Throttle valve open	M/T 4 – 5 V A/T 10 – 14 V
	VTA – E2			Throttle valve fully closed	0.1 – 1.0 V
				Throttle valve fully open	4 – 5 V
	VC – E2			–	4 – 6 V

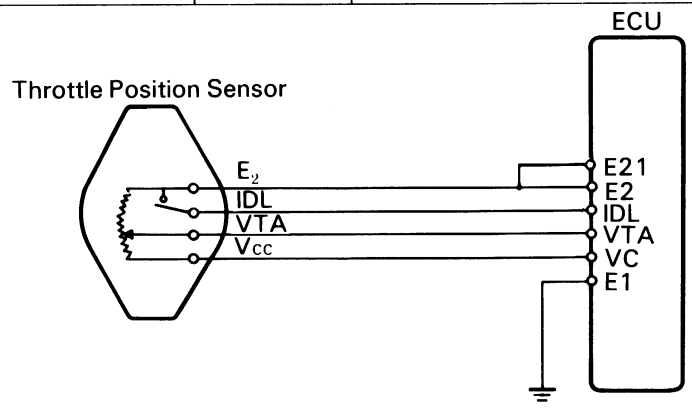

FI0485

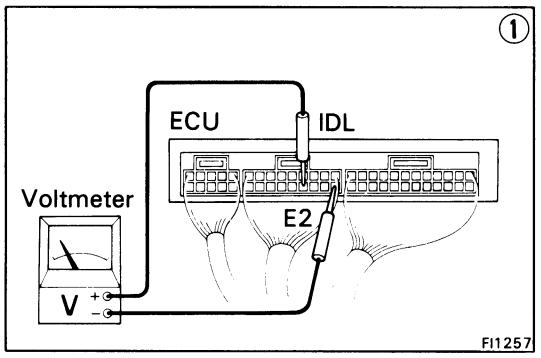

FI1257

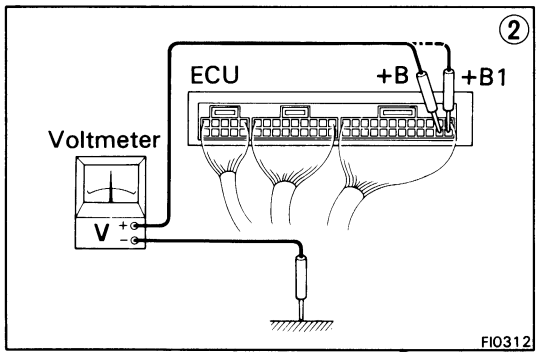

FI0312

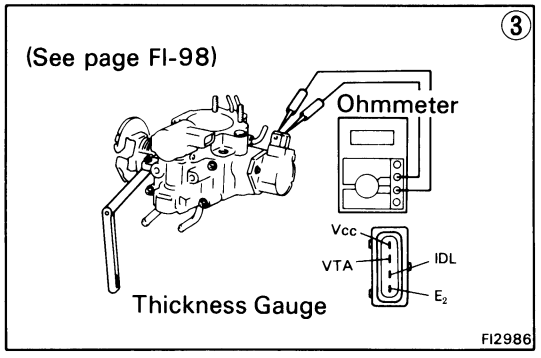

FI2986

• IDL ↔ E2

① There is no voltage between ECU terminals IDL and E2. **(IG SW ON)** (Throttle valve open)

↓

② Check that there is voltage between ECU terminal +B1 or +B and body ground. **(IG SW ON)**

- NO → Refer to No. 1 (See page FI-49)
- OK → Check wiring between ECU terminal E1 and body ground.
  - BAD → Repair or replace
  - OK → Refer to No. 1 (See page FI-49)

Refer to No. 1 (See page FI-49)
- BAD → Repair or replace
- OK → ③ Check throttle position sensor.

③ Check throttle position sensor.
- BAD → Repair or replace throttle position sensor.
- OK → Check wiring between ECU and throttle position sensor.
  - BAD → Repair or replace
  - OK → Try another ECU

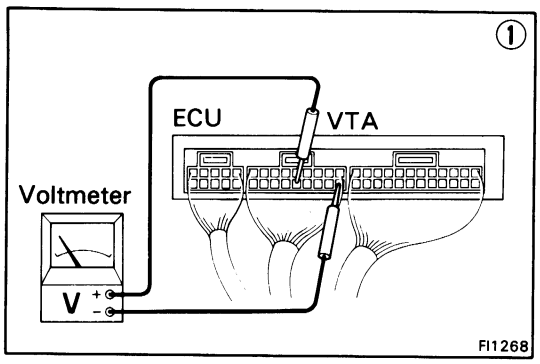

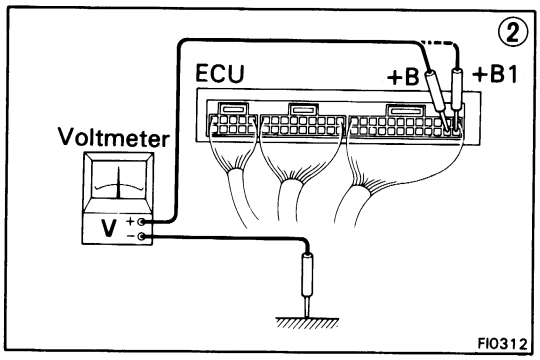

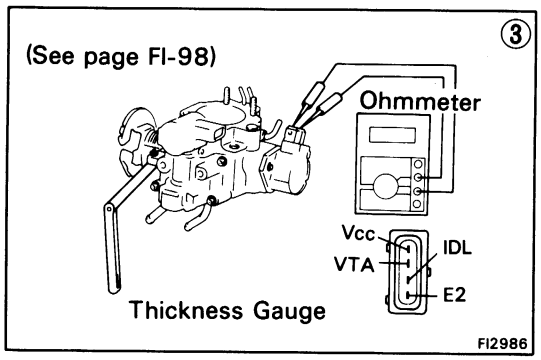

- **VTA ↔ E2**

① There is no specified voltage at ECU terminals VTA and E2. **(IG SW ON)**

↓

② Check that there is voltage between ECU terminal +B1 or +B and body ground. **(IG SW ON)**

- NO → Refer to No. 1 (See Page FI-49)
- OK → Check wiring between ECU terminal E1 and body ground.
  - BAD → Repair or replace

Refer to No. 1 (See Page FI-49)
- BAD → Repair or replace
- OK ↓

③ Check throttle position sensor.
- BAD → Repair or replace
- OK ↓

Check wiring between ECU and throttle position sensor.
- BAD → Repair or replace
- OK ↓

Try another ECU.

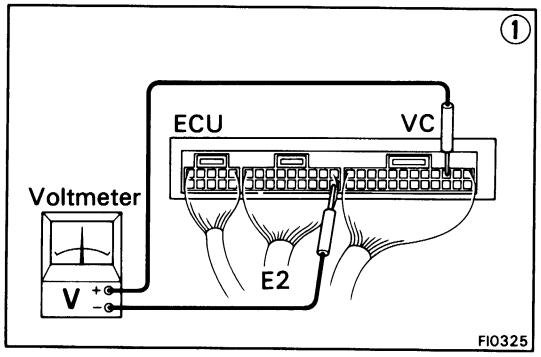

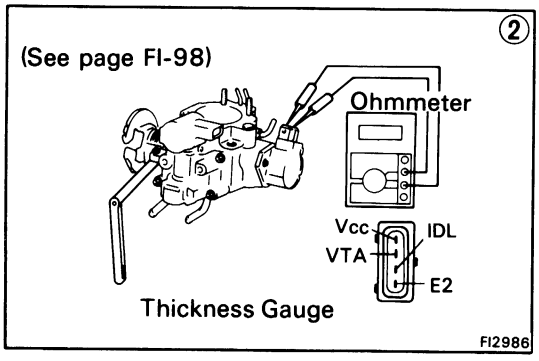

- **VC ↔ E2**

① There is no voltage between ECU terminals VC and E2. **(IG SW ON)**

↓

Check that there is voltage between ECU terminal +B1 or +B and body ground. **(IG SW ON)**

- NO → Refer to No. 1. (See page FI-49)
- OK ↓

② Check throttle position sensor.
- BAD → Repair or replace
- OK ↓

Check wiring between ECU and throttle position sensor.
- OK → Try another ECU.
- BAD → Repair or replace wiring.

No.	Terminals	Trouble	Condition		STD Voltage
4	Vc – E2	No voltage	IG SW ON	–	4 – 6V
	Vs – E2			Measuring plate fully closed	3.7 – 4.3 V
				Measuring plate fully open	0.2 – 0.5 V
			Idling	–	2.3 – 3.8 V

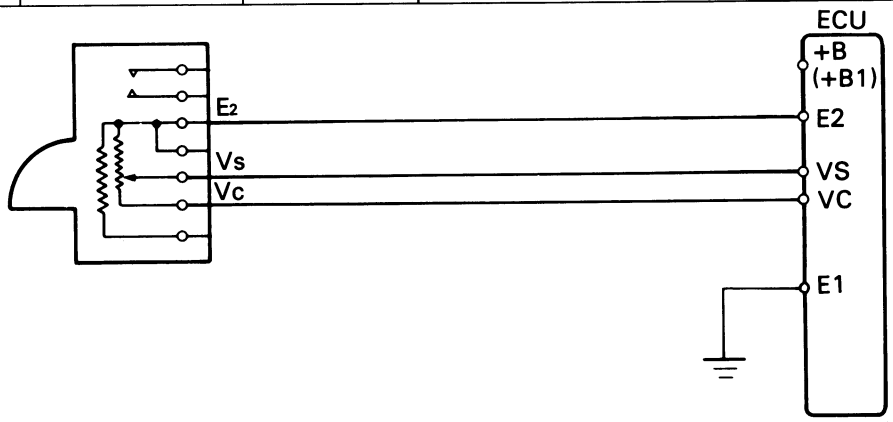

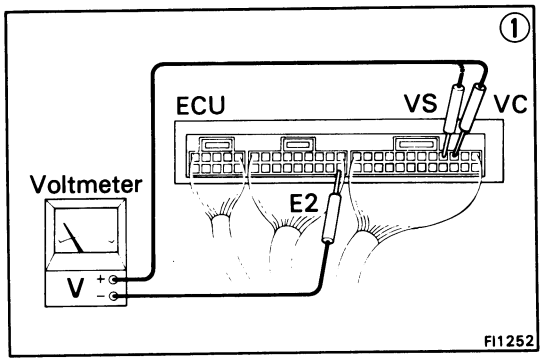

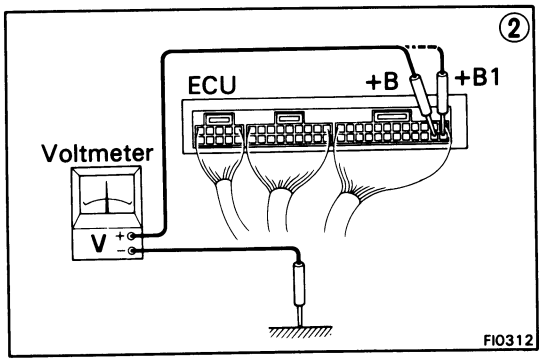

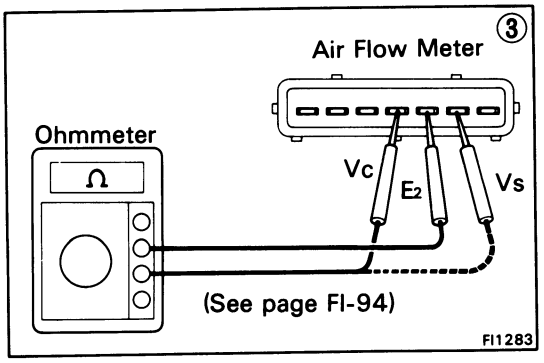

• VC – E2, VS – E2

① No specified voltage at ECU terminals Vc or Vs and E2. **(IG SW ON)**

↓

② Check that there is voltage between ECU terminal +B or +B1 and body ground. **(IG SW ON)**

- NO → Refer to No. 1 (See page FI-49)
- OK ↓

Check wiring between ECU terminal E1 and body ground.

- BAD → Repair or replace.
- OK ↓

③ Check air flow meter.

- BAD → Repair or replace air flow meter.
- OK ↓

Check wiring between ECU and air flow meter.

- BAD → Repair or replace.
- OK ↓

Try another ECU.

No.	Terminals	Trouble	Condition	STD Voltage
5	No. 10 — E No. 20 — E	No voltage	Ignition switch ON	9 – 14V

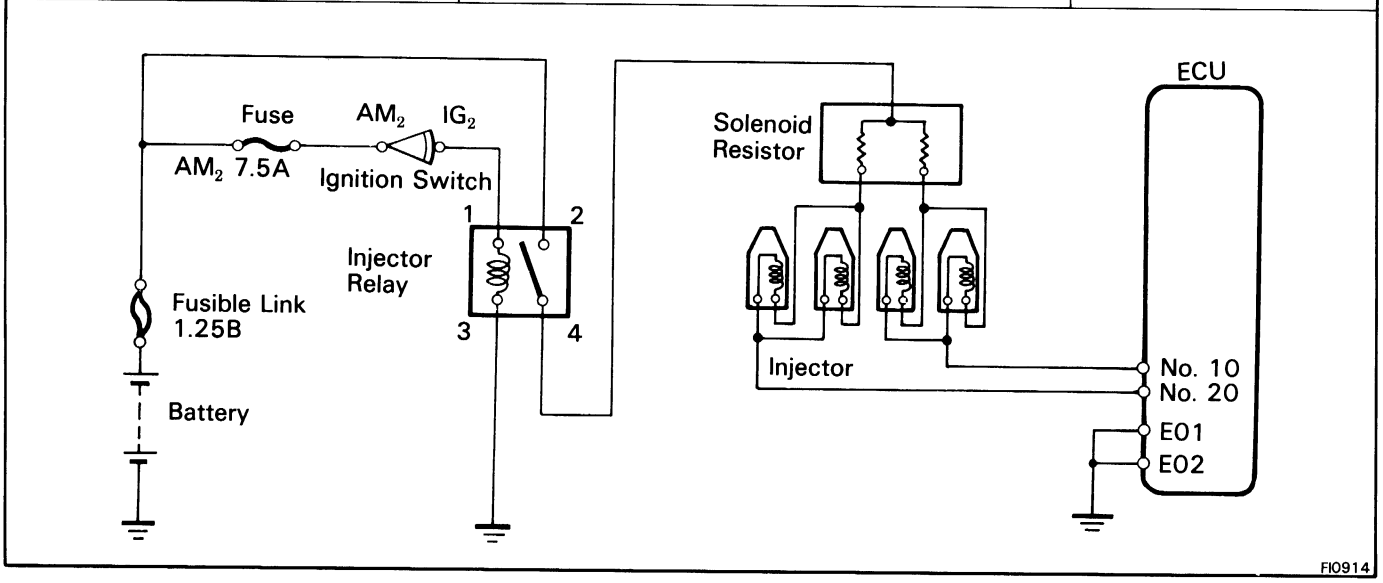

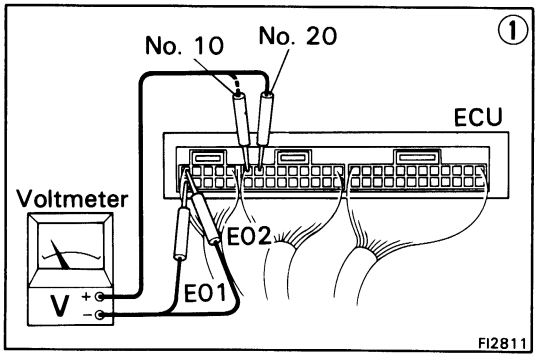

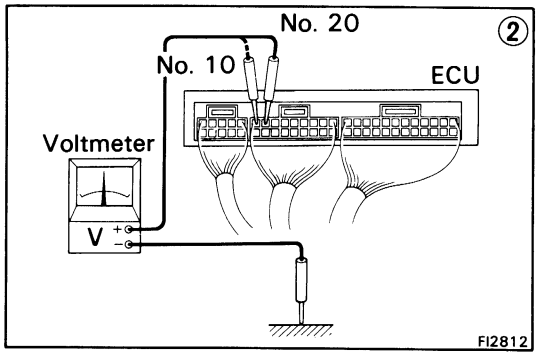

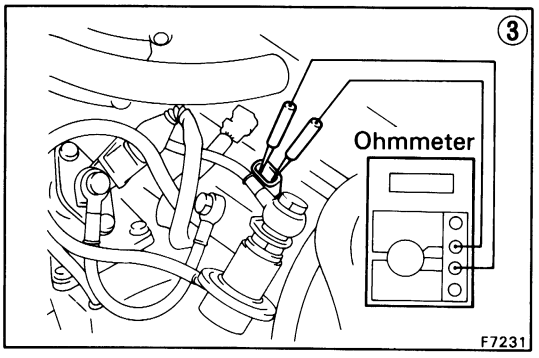

① There is no voltage between computer terminal No. 10 and/or No. 20 and E01 and/or E02. **(IG SW ON)**

↓

② Check that there is specified voltage between resistor terminal (+) and body ground. **STD voltage: 9 – 14V**

OK → ↓ NO → Check fuse, fusible link, injector relay and ignition switch. → BAD → Repair or replace

↓

② Check that there is specified voltage between resistor terminal (–) and body ground. **STD voltage: 9 – 14V**

OK → ↓ NO → Replace resistor

↓

③ Check resistance of the magnetic coil in each injector.
STD resistance: Approx. 2.9 Ω

OK → ↓ BAD → Replace injector

↓

Check wiring between computer and resistor.

No.	Terminals	Trouble	Condition	STD Voltage
6	W – E_1	No voltage	No trouble ("CHECK ENGINE" warning light off) and engine running.	9 – 14V

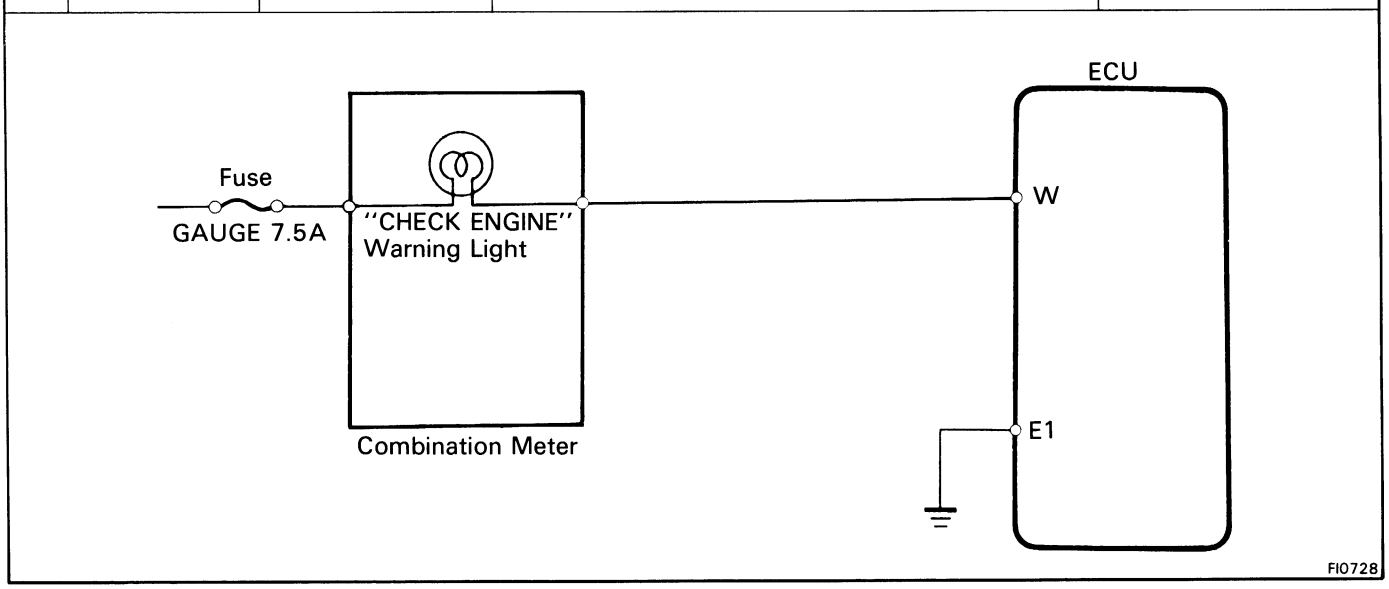

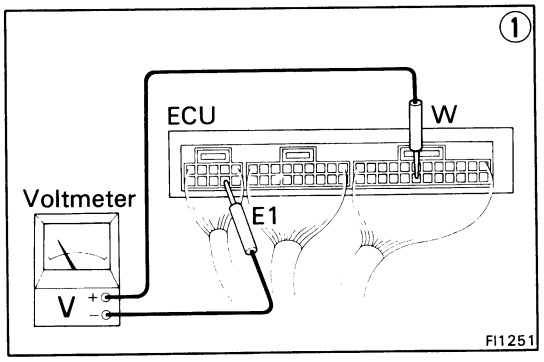

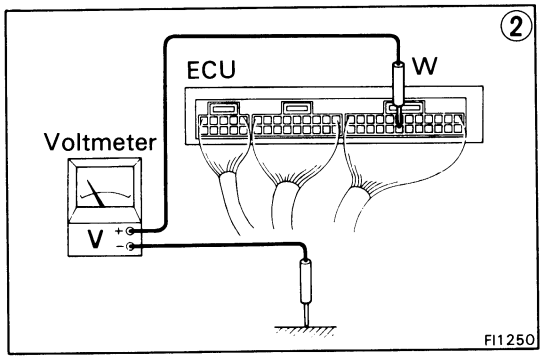

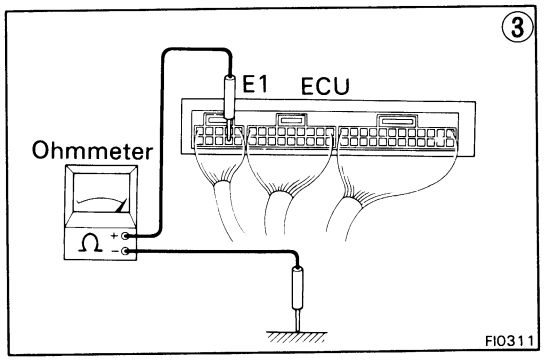

① No voltage between ECU terminals W and E1. **(Idling)**

↓

② Check that there is voltage between ECU terminal W and body ground.

- NO → Check GAUGE fuse (7.5 A) and "CHECK ENGINE" warning light.
- OK → ③ Check wiring between ECU terminal E1 and body ground.
  - OK → Try another ECU.
  - BAD → Repair or replace.

Check GAUGE fuse (7.5 A) and "CHECK ENGINE" warning light.

- OK → Check wiring between ECU terminal W and fuse.
- BAD → Repair or replace.
  - Fuse blows again → Check wiring between ECU terminal W and fuse.

Check wiring between ECU terminal W and fuse.

- BAD → Repair or replace.

No.	Terminals	Trouble	Condition		STD voltage
7	THA – E2	No voltage	Ignition switch ON	Intake air temperature 20°C (68°F)	1 – 3 V

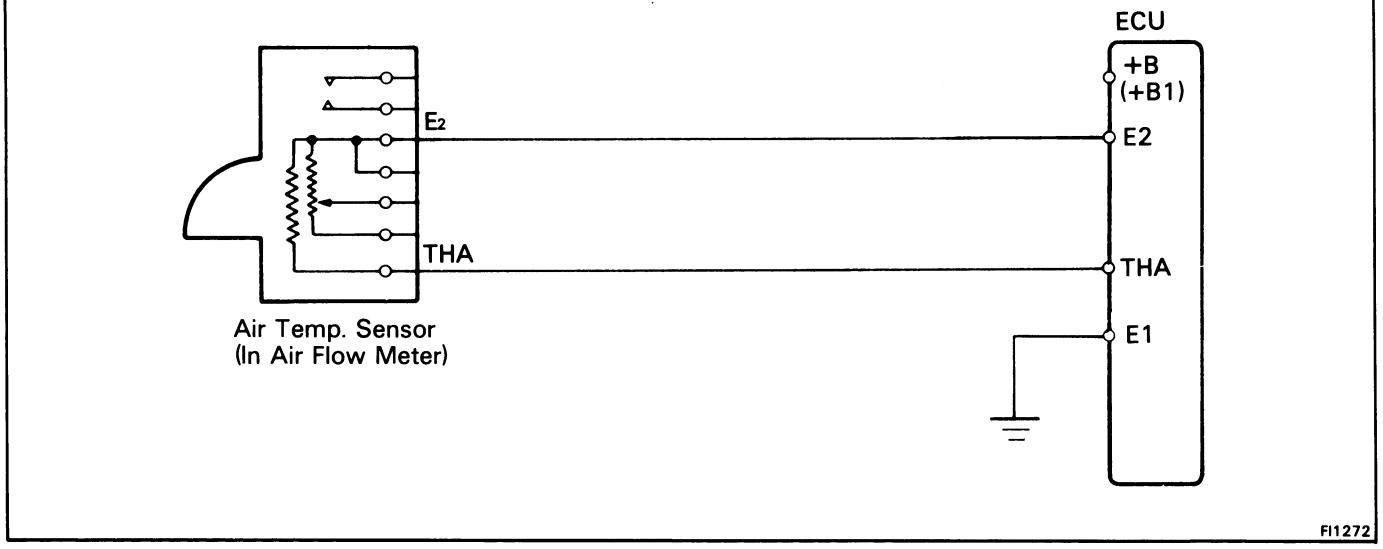

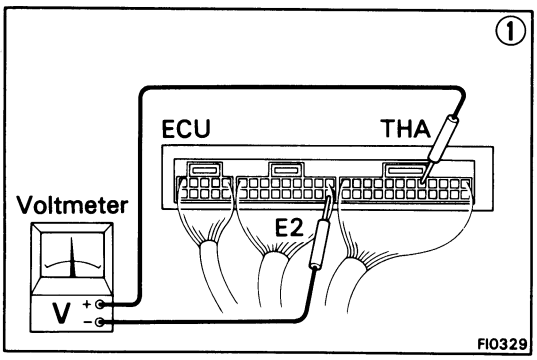

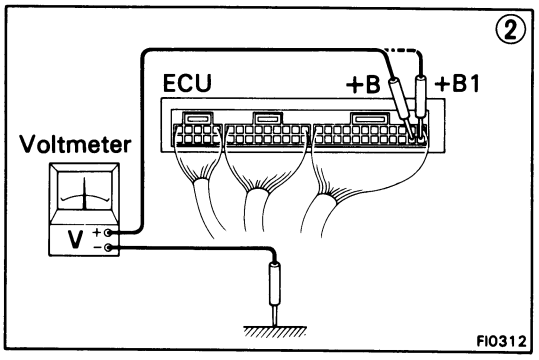

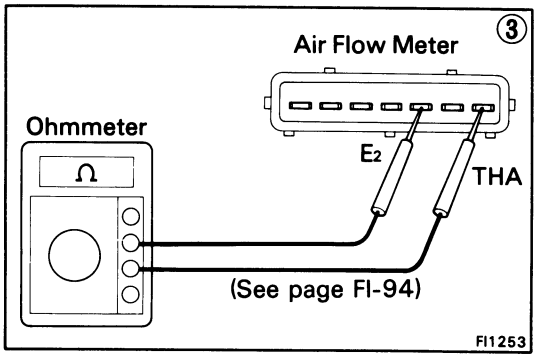

① There is no specified voltage between ECU terminals THA and E2. **(IG SW ON)**

↓

② Check that there is voltage between ECU terminal +B1 or +B and body ground. **(IG SW ON)**

- NO → Refer to No. 1. (See page FI-49)
- OK ↓

③ Check air temp. sensor.

- BAD → Replace air temp. sensor.
- OK ↓

Check wiring between ECU and air temperature sensor.

- OK → Try another ECU.
- BAD → Repair or replace wiring.

No.	Terminals	Trouble	Condition		STD Voltage
8	THW – E2	No voltage	Ignition switch ON	Coolant temperature 80°C (176°F)	0.1 – 1.0 V

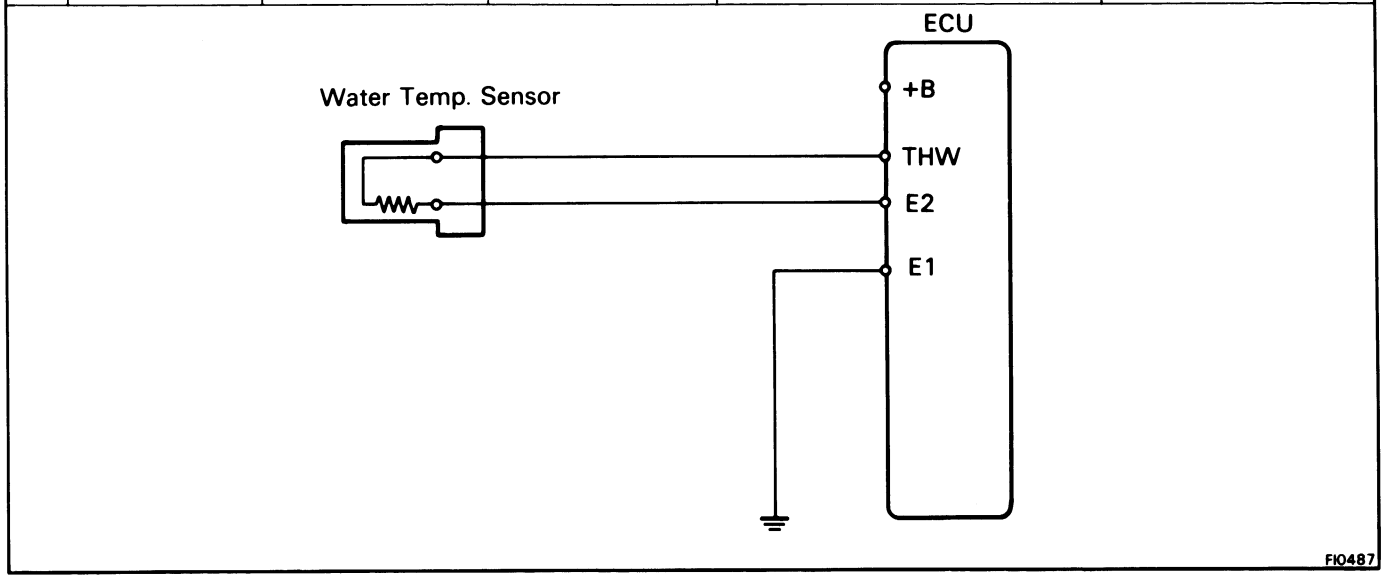

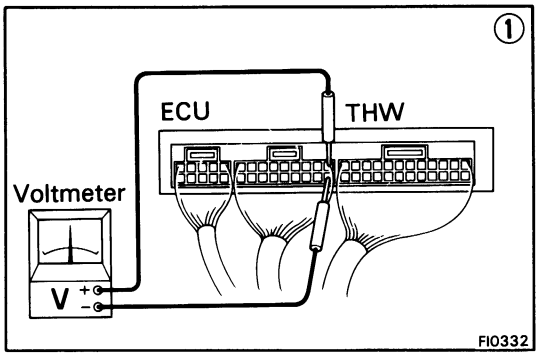

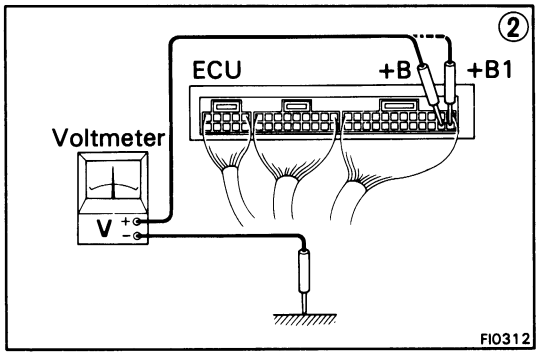

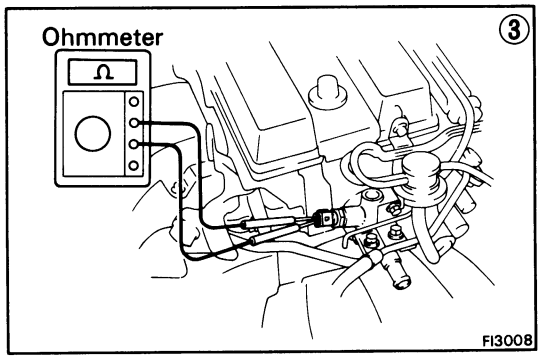

① There is no specified voltage between ECU terminals THW and E2. **(IG SW ON)**

↓

② Check that there is voltage between ECU terminal +B1 or +B and body ground. **(IG SW ON)**

- OK → ③ Check water temp. sensor.
  - BAD → Replace water temp. sensor.
  - OK → Check wiring between ECU and air temp. sensor.
    - OK → Try another ECU.
    - BAD → Repair or replace wiring.
- NO → Refer to No. 1. (See page FI-49)

No.	Terminals	Trouble	Condition	STD Voltage
9	STA – E1	No voltage	Ignition switch ST position	6 – 14 V

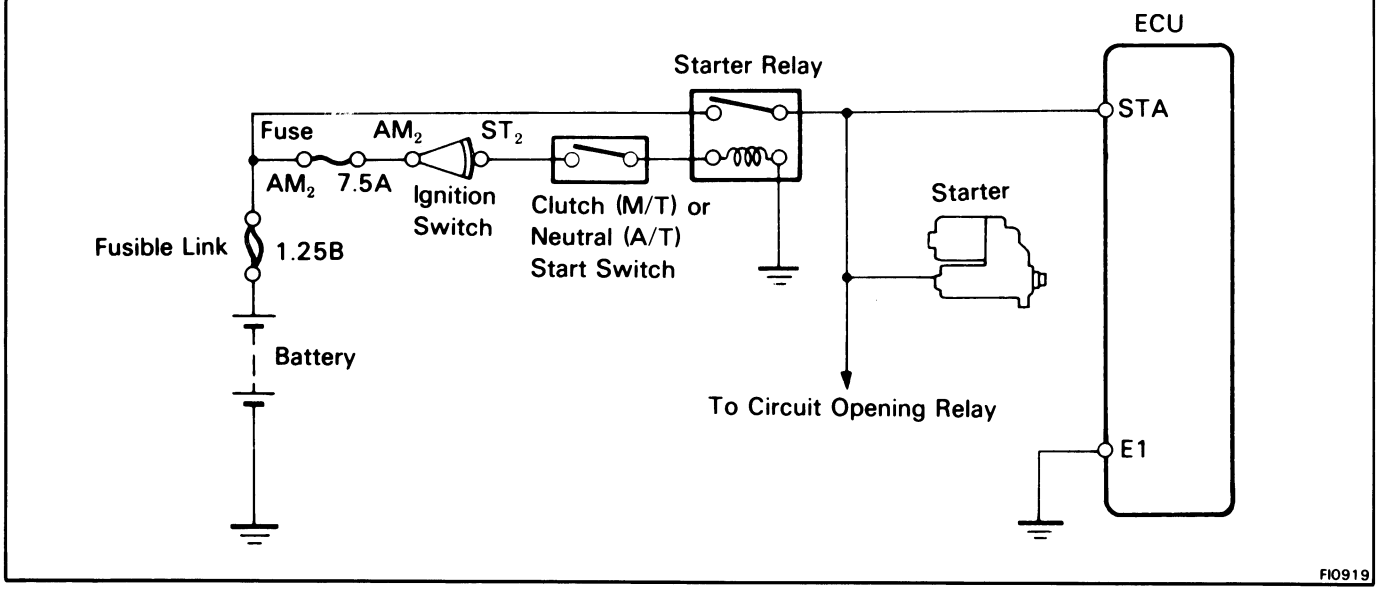

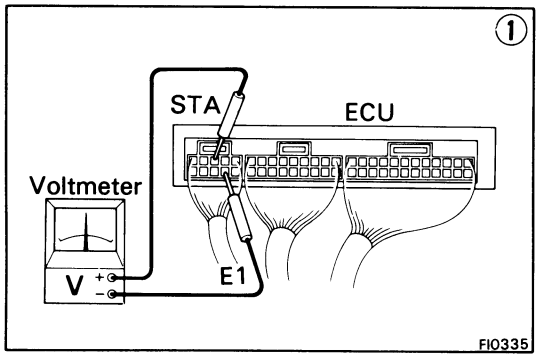

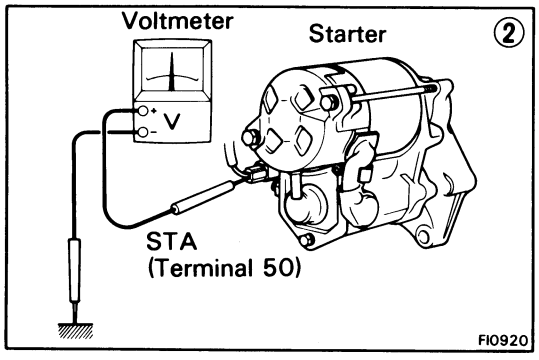

① There is no voltage between ECU terminals STA and E1. **(IG SW ON)**

Check starter operation.
- OK → Check wiring between ECU and starter terminal 50.
  - OK → Check wiring between ECU terminal E1 and body ground.
    - BAD → Repair or replace
  - BAD → Repair or replace
- BAD → Check fusible link, battery, wiring ignition switch, starter relay and clutch start switch.
  - BAD → Repair or replace
  - OK → ② Check that there is voltage at STA (50) terminal of starter. **(IG SW ST) STD voltage: 6 – 14V**
    - OK → Check Starter
    - NO → Check wiring between ignition switch ST terminal and starter STA (50) terminal.

No.	Terminals	Trouble	Condition	STD Voltage
10	IGT – E_1	No voltage	Idling	0.7 – 1.0 V

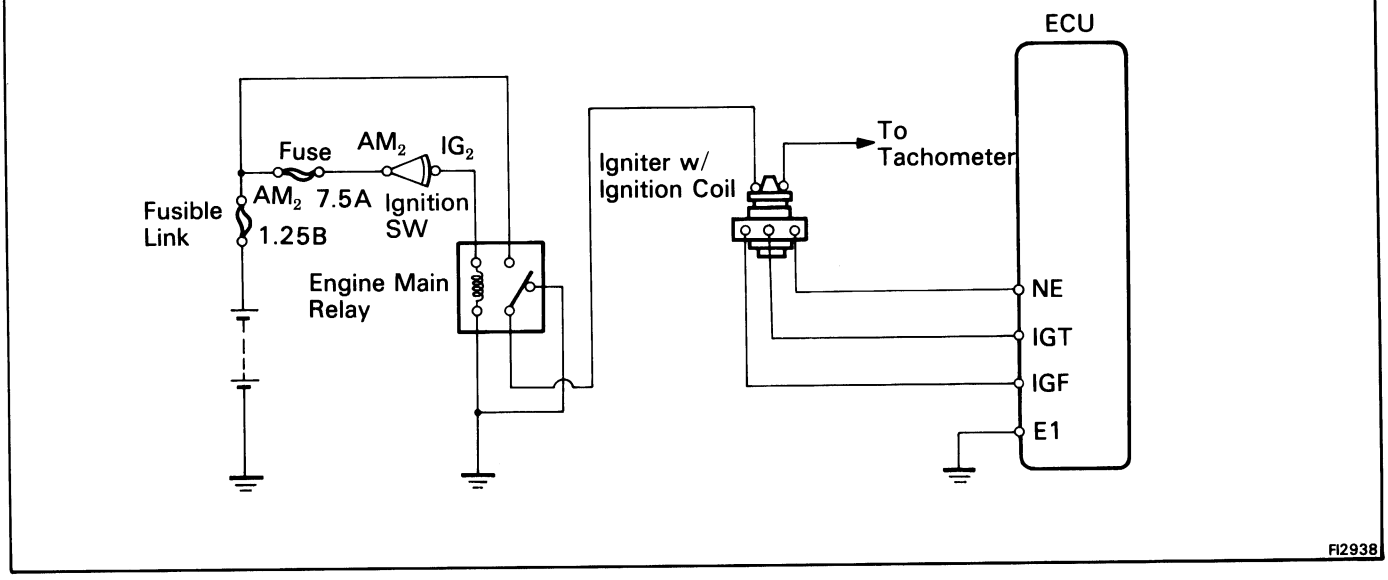

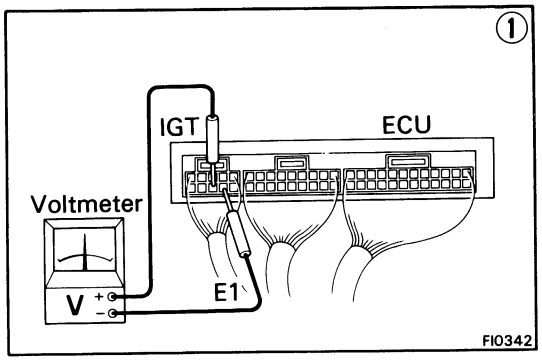

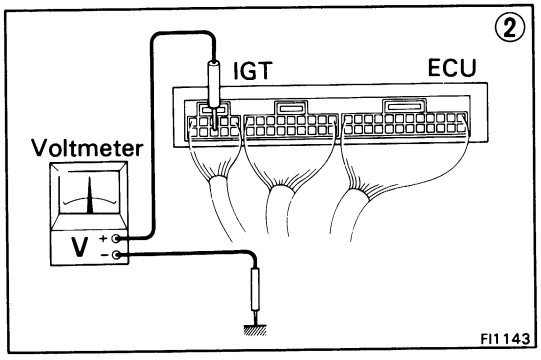

① There is no voltage between ECU terminal IGT and E1. (Idling)

② Check that there is voltage between ECU terminal IGT and body ground. (Idling)

- NO → Refer to No. 1 (See page FI-69)
- OK → Check wiring between ECU terminal E1 and body ground.
  - BAD → Repair or replace

Refer to No. 1 (See page FI-69)
- BAD → Repair or replace
- OK → Check wiring between ECU and distributor.

Check wiring between ECU and distributor.
- BAD → Repair or replace
- OK → Check distributor.

Check distributor.
- BAD → Replace
- OK → Check wiring between ECU and Igniter.

Check wiring between ECU and Igniter.
- BAD → Repair or replace
- OK → Check igniter. (See page IG-4)

Check igniter. (See page IG-4)
- BAD → Repair or replace
- OK → Try another ECU.

No.	Terminals	Trouble	Condition	STD Voltage
11	$1SC_1$ $1SC_2$ – E1	No voltage	IG SW ON	9 – 14 V

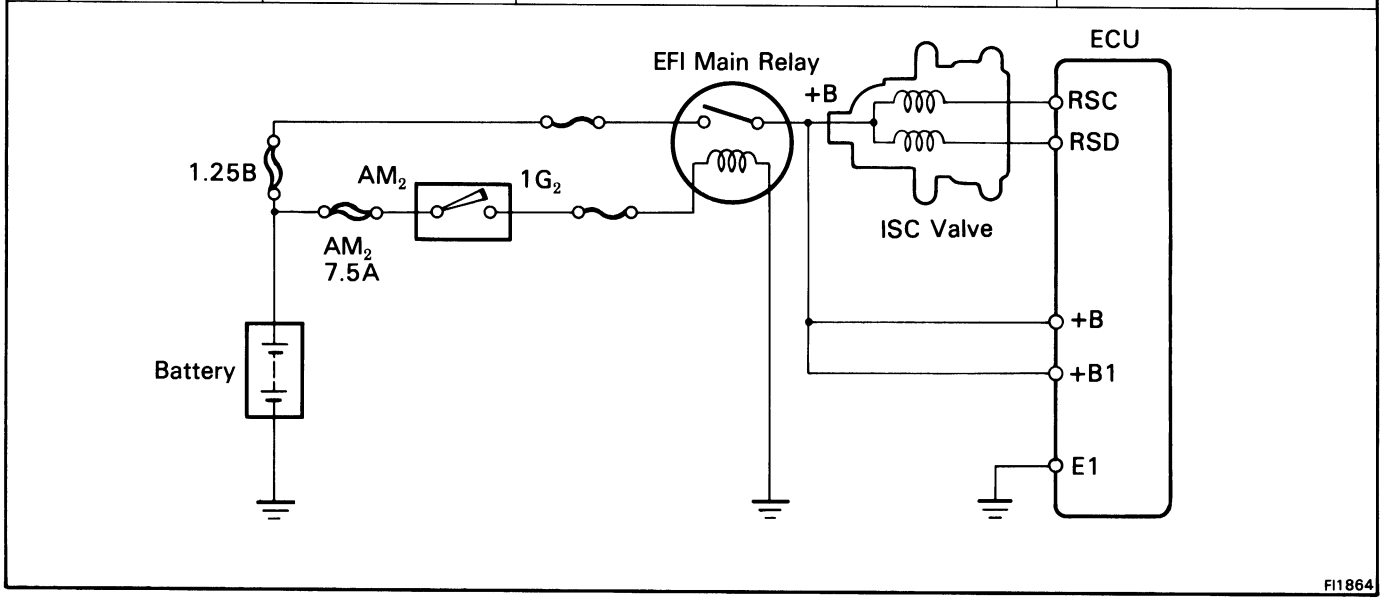

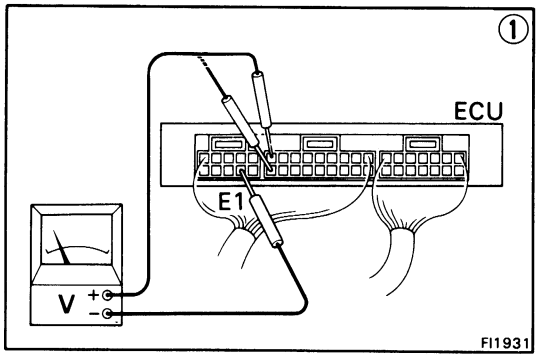

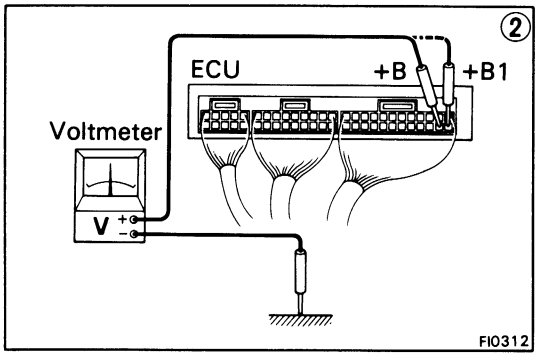

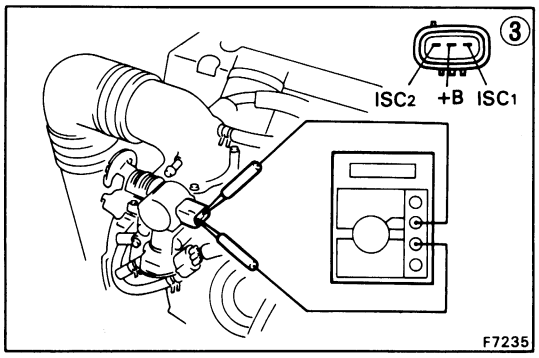

① There is no voltage between ECU terminal RSC or RSO and E1. **(IG SW ON)**

↓

② Check that there is voltage between ECU terminals +B or +B1 and body ground. **(IG SW ON)**

- NO → Refer to No. 1. (See page FI-49)
- OK ↓

③ Check resistance between ISC valve terminals +B and ISC_1 or ISC_2
STD resistance: 16.0 – 17.0 Ω

- BAD → Replace ISC valve.
- OK ↓

Check wiring between ECU and ISC valve.

- BAD → Repair or replace wiring
- OK ↓

Try another ECU.

No.	Terminals	Trouble	Condition	STD Voltage
12	A/C – E1	No voltage	Air conditioning ON	5 – 14 V

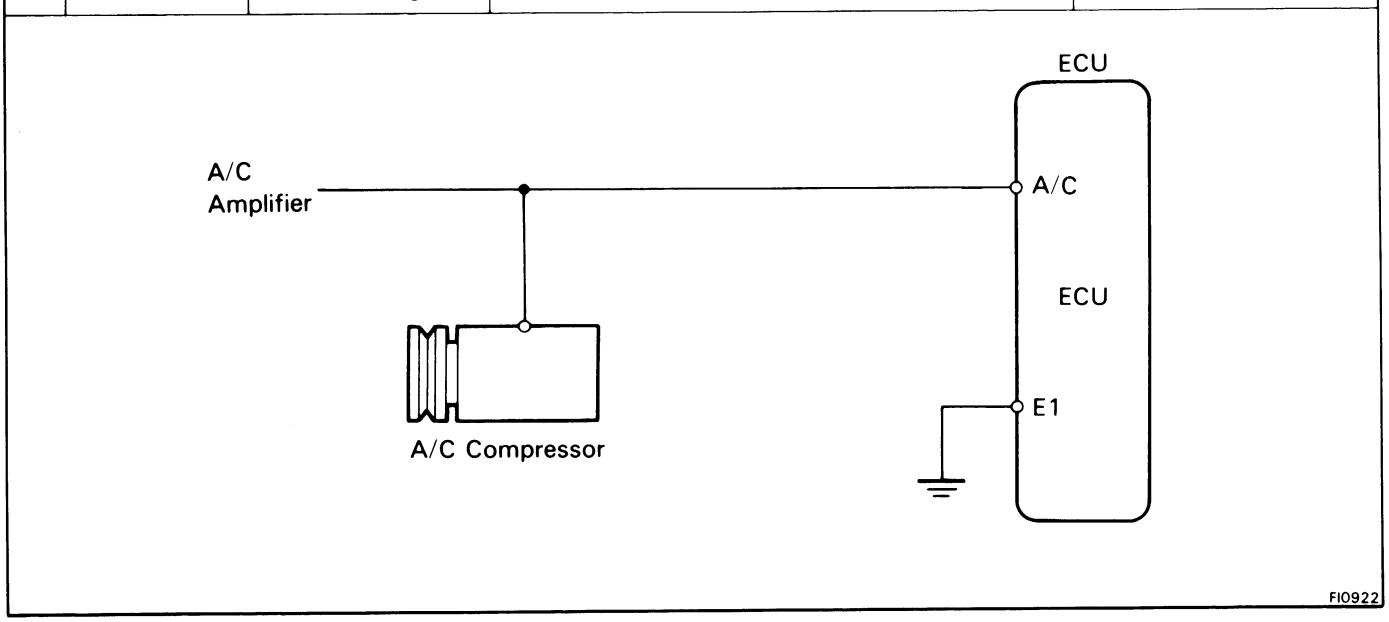

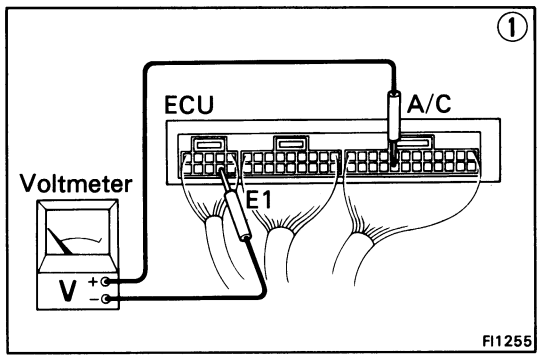

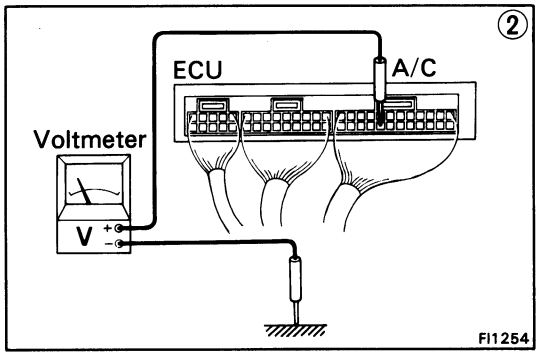

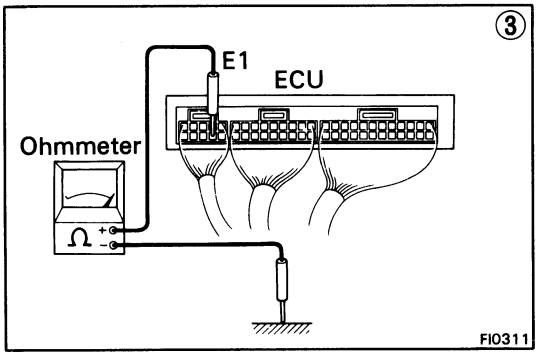

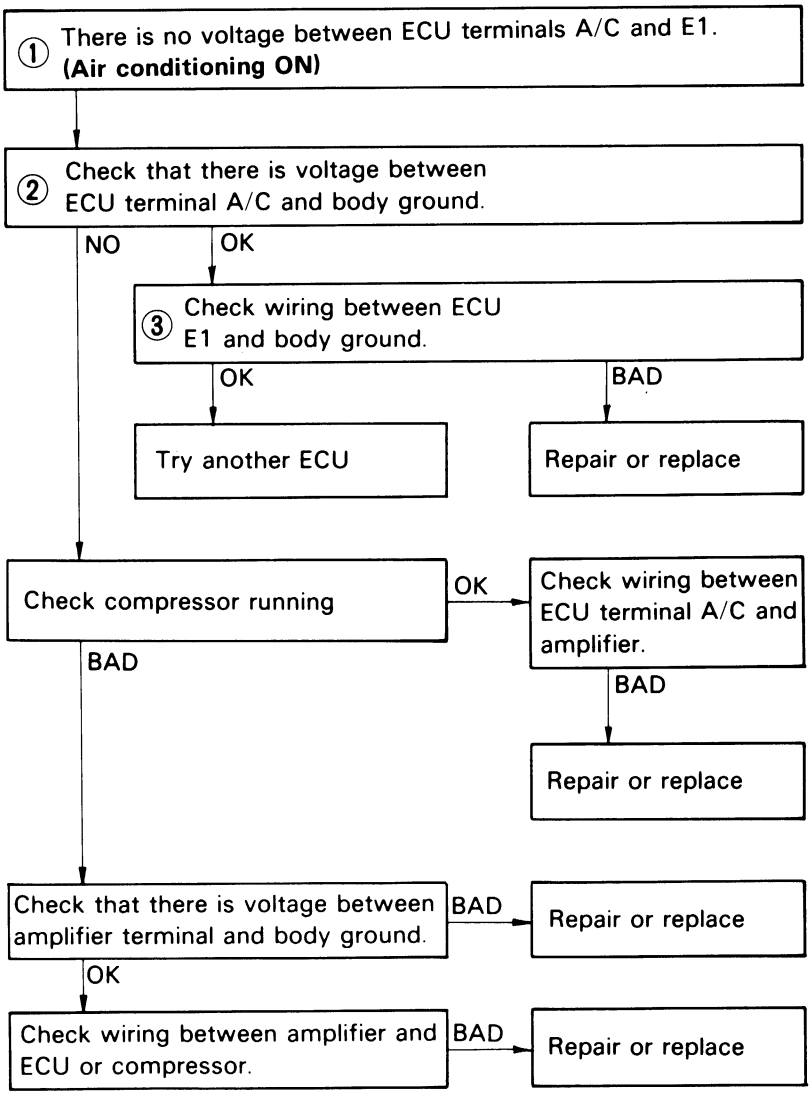

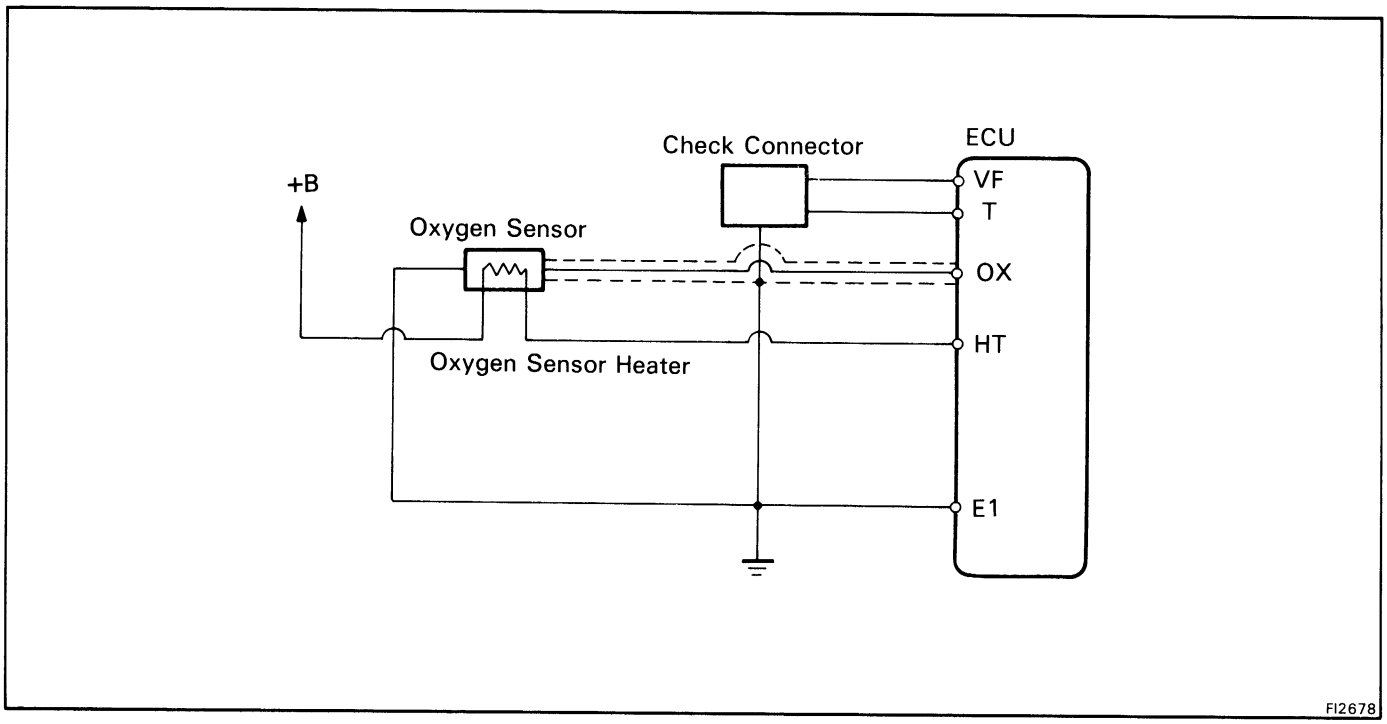

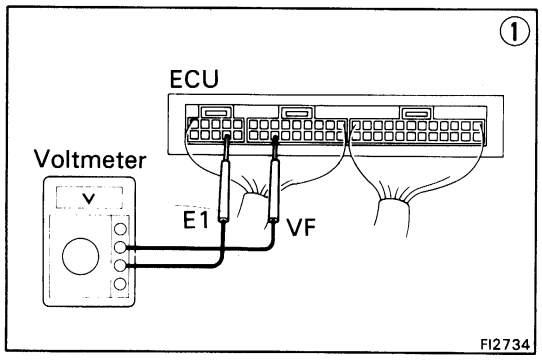

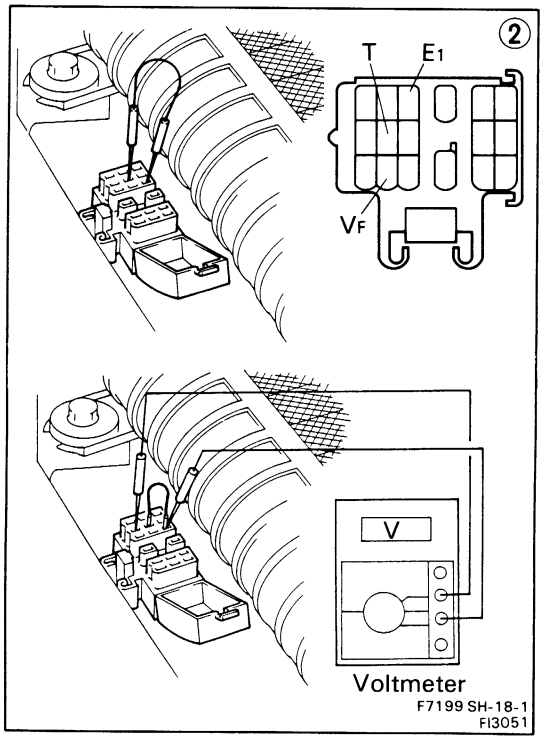

① There is no voltage between ECU terminals VF and E1.

Check that there is voltage between ECU terminal VF and body ground.

- NO → Is air leaking into air intake system?
- OK → Check wiring between ECU terminal E1 and body ground.
  - OK → Try another ECU.
  - BAD → Repair or replace.

Is air leaking into air intake system?
- BAD → Repair air leak.
- OK ↓

Check spark plugs.
- BAD → Repair or replace.
- OK ↓

Check distributor and ignition system.
- BAD → Repair or replace.
- OK ↓

Check fuel pressure.
- BAD → Repair or replace.
- OK ↓

Check injector.
- BAD → Repair or replace.
- OK ↓

Check cold start injector. *
- BAD → Repair or replace.
- OK ↓

Check air flow meter.
- BAD → Repair or replace.
- OK ↓

② Check operation of oxygen sensor.
- OK → System normal.
- BAD ↓

Check wiring between oxygen sensor and ECU connector.
- BAD → Repair wiring.
- OK ↓

Replace oxygen sensor.

* Rich malfunction only

California

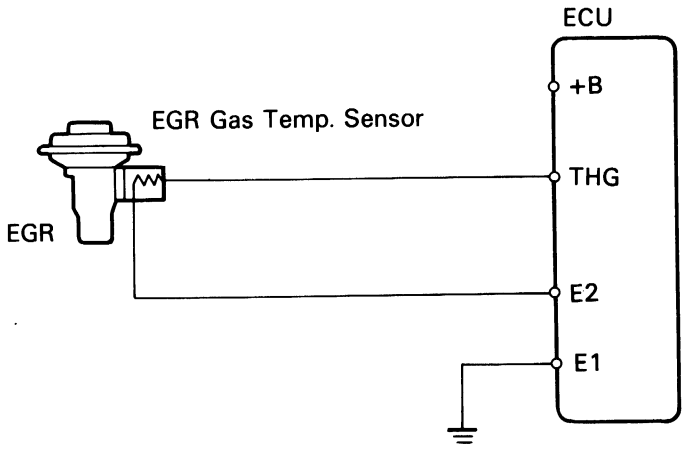

FI2680

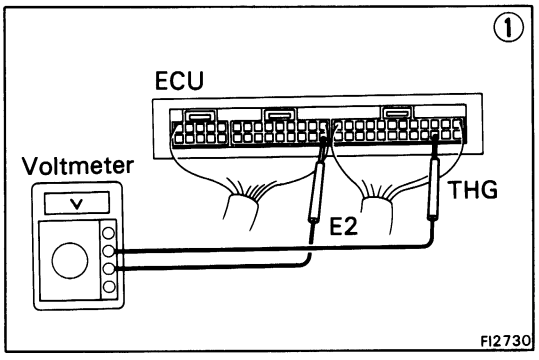

FI2730

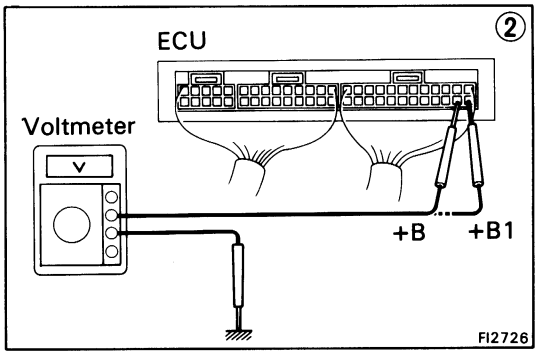

FI2726

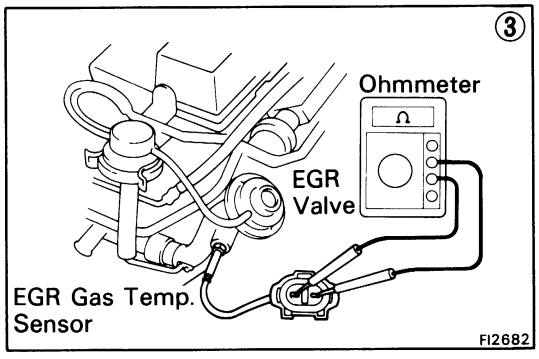

FI2682

No voltage between ECU terminals THG and E2.
(Engine running at 2,000 rpm)

↓

Check that there is voltage between ECU terminal +B or +B1 and body ground. **(IG SW ON)**

- OK → ↓
- NO → Refer to No. 1 (See page FI-49)

↓

Check wiring between ECU terminal E1 and body ground.

- OK → ↓
- BAD → Repair or replace.

↓

Check EGR system.

- BAD → Repair or replace.
- OK → ↓

↓

Check EGR gas temp. sensor.

- BAD → Replace EGR gas temp. sensor.
- OK → Check wiring between ECU and EGR gas temp. sensor.
  - OK → Try another ECU.
  - BAD → Repair or replace.

FUEL SYSTEM
Fuel Pump

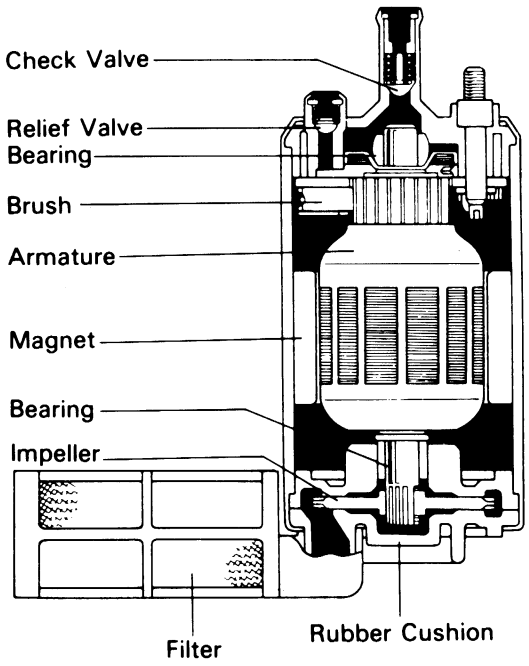

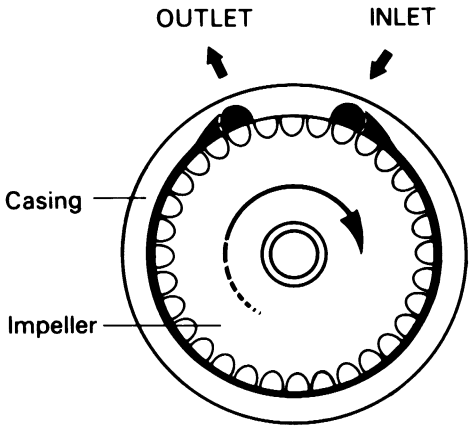

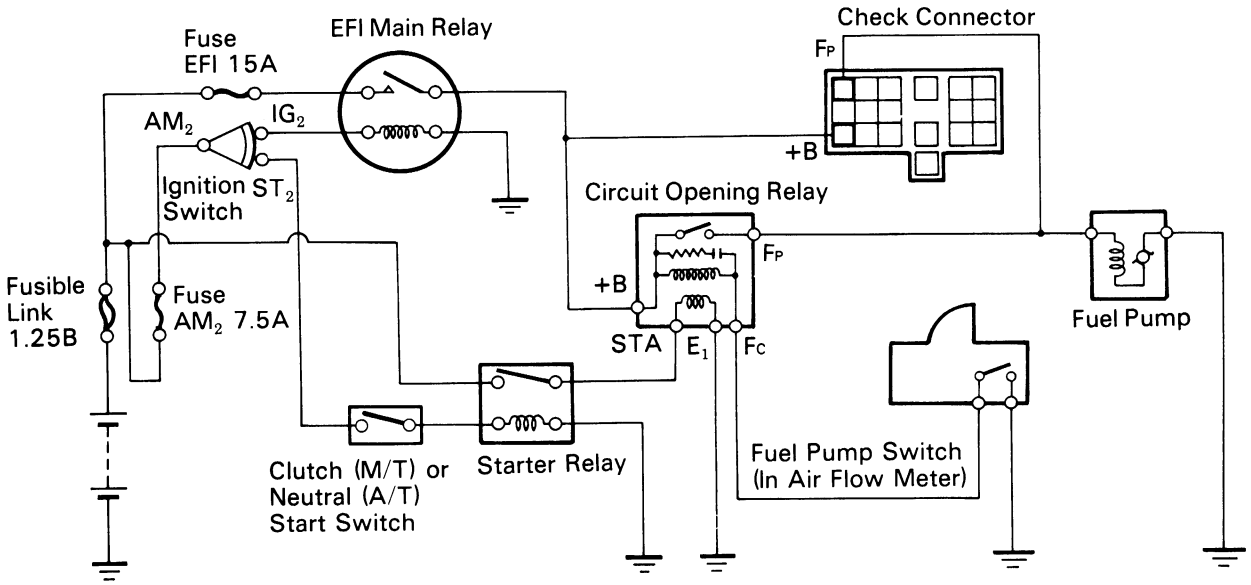

FI0491 FI1479
FI0925

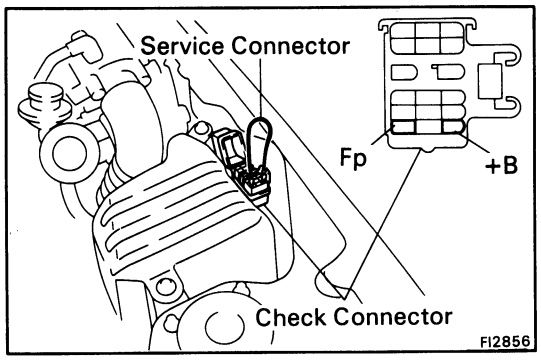

ON-VEHICLE INSPECTION (4A-GE)

1. CHECK FUEL PUMP OPERATION

(a) Turn the ignition switch ON.

NOTE: Do not start the engine.

(b) Short the terminals Fp and +B of the check connector.

NOTE: The check connector is located near the resonator.

(c) Check that there is pressure in the pressure regulator fuel return hose.

NOTE: At this time, you will hear fuel return noise from the pressure regulator.

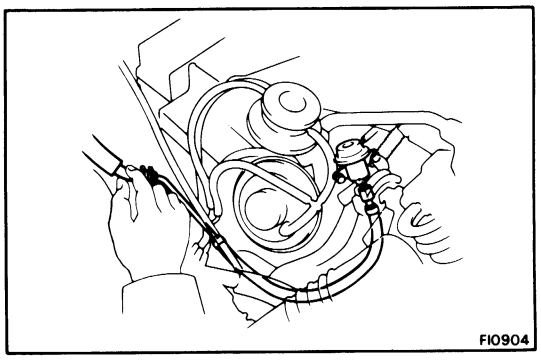

(d) Remove the service wire.

(e) Turn the ignition switch OFF.

If there is no pressure, check the following parts.

- Fusible link (1.25B)
- Fuse (EFI 15A, AM_2 7.5A)
- EFI main relay
- Circuit opening relay
- Fuel pump
- Wiring connections

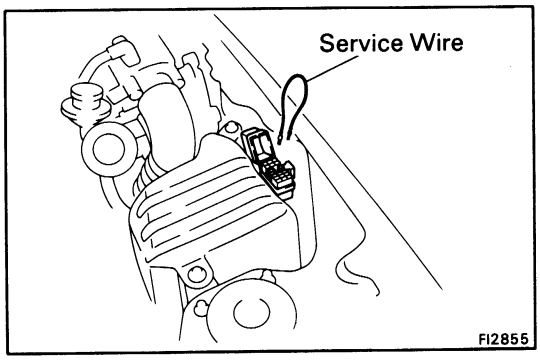

2. CHECK FUEL PRESSURE

(a) Check that battery voltage is above 12 volts.

(b) Disconnect the battery ground cable.

(c) Disconnect the wiring connector from the cold start injector.

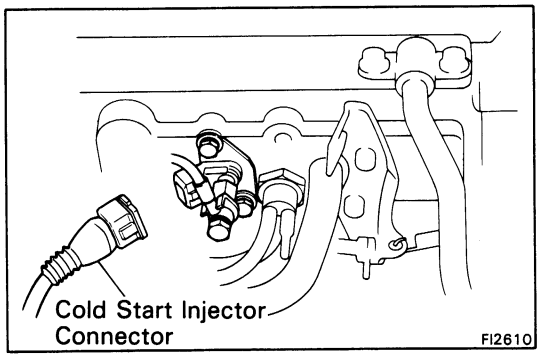

(d) Place a suitable container or shop towel under the cold start injector pipe.

(e) Slowly loosen the union bolt of the cold start injector pipe and remove the bolt and two gaskets from the delivery pipe.

(f) Drain the fuel in the delivery pipe.

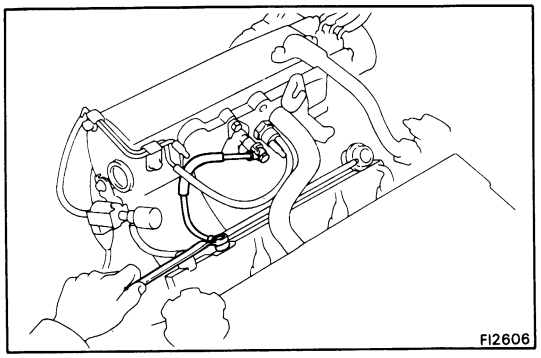

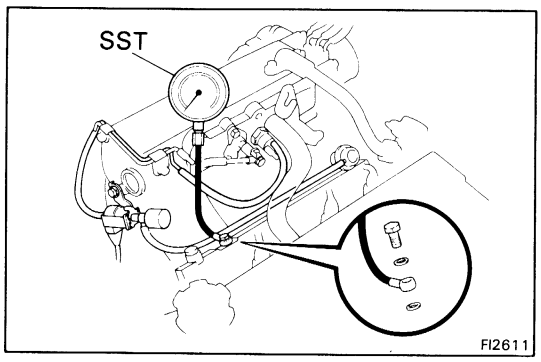

(g) Install a gasket, SST, another gasket and union bolt to the delivery pipe as shown in the figure.

SST 09268-45012

(h) Wipe off any splattered gasoline.

(i) Reconnect the battery cable.

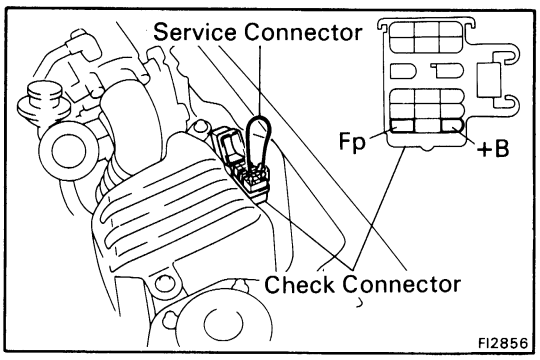

(j) Short the terminals Fp and +B of the check connector.

NOTE: The check connector is located near the resonator.

(k) Turn on the ignition switch.

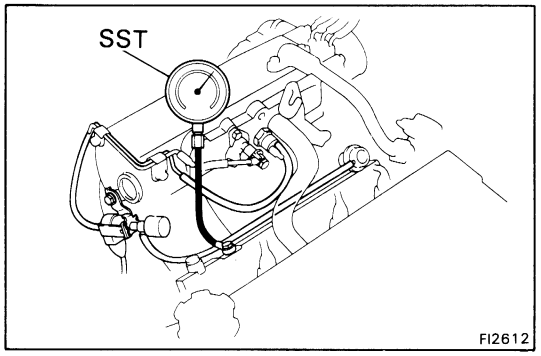

(l) Measure the fuel pressure.

Fuel pressure: 2.7 – 3.1 kg/cm^2 (38 – 44 psi, 265 – 304 kPa)

If high, replace the pressure regulator.

If low, check the following parts.

- Fuel hoses and connection
- Fuel Pump
- Fuel filter
- Pressure regulator

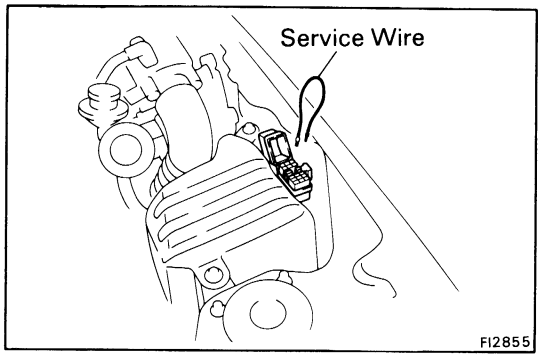

(m) Remove the service wire from the check connector.

(n) Start the engine.

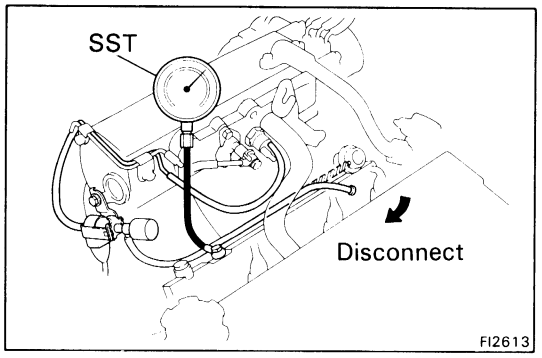

(o) Disconnect the vacuum sensing hose from the pressure regulator and plug it.

(p) Measure the fuel pressure at idling.

Fuel pressure: 2.7 – 3.1 kg/cm^2 (38 – 44 psi, 265 – 304 kPa)

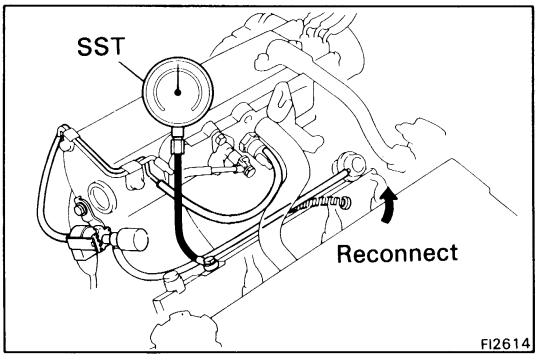

(q) Reconnect the vacuum sensing hose to the pressure regulator.

(r) Measure the fuel pressure at idling after 90 seconds.

Fuel pressure: 2.1 – 2.3 kg/cm^2 (30 – 33 psi, 206 – 226 kPa)

If no pressure, check the vacuum sensing hose and pressure regulator.

(s) Stop the engine. Check that the fuel pressure remains above 1.5 kg/cm^2 (21 psi, 147 kPa) for 5 minutes after the engine is turned off.

If not within specification, check the fuel pump, pressure regulator and/or injectors.

(t) After checking fuel pressure, disconnect the battery ground cable and carefully remove the SST to prevent gasoline from splashing.

(u) Using new gaskets, reconnect the cold start injector hose to the delivery pipe.

(v) Connect the wiring connector to the cold start injector.

(w) Check for fuel leakage.

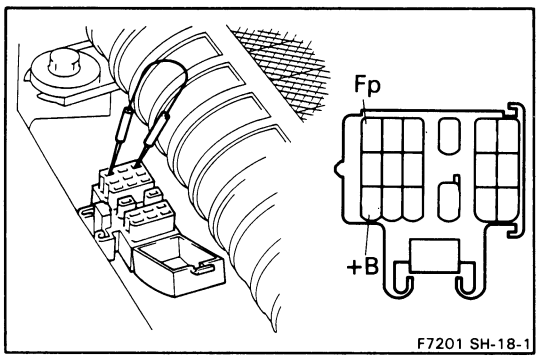

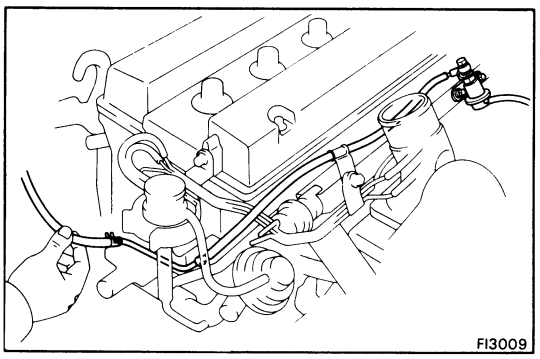

ON-VEHICLE INSPECTION (4A-GZE)

1. CHECK FUEL PUMP OPERATION

(a) Turn the ignition switch ON.

NOTE: Do not start the engine.

(b) Short the terminals Fp and +B of the check connector.

NOTE: The check connector is located near the intercooler.

(c) Check that there is pressure in the pressure regulator fuel return hose.

NOTE: At this time, you will hear fuel return noise from the pressure regulator.

(d) Remove the service wire.

(e) Turn the ignition switch OFF.

If there is no pressure, check the following parts.

- Fusible link (1.25B)
- Fuse (EFI 15A, AM_2 7.5A)
- EFI main relay
- Circuit opening relay
- Fuel pump
- Wiring connections

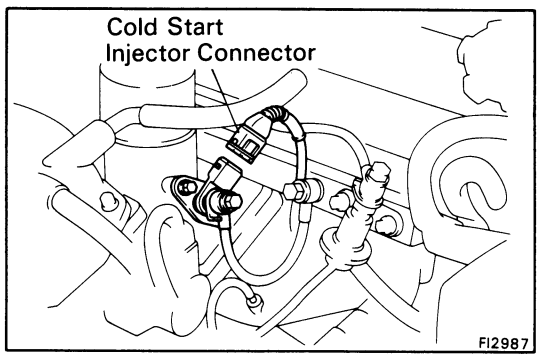

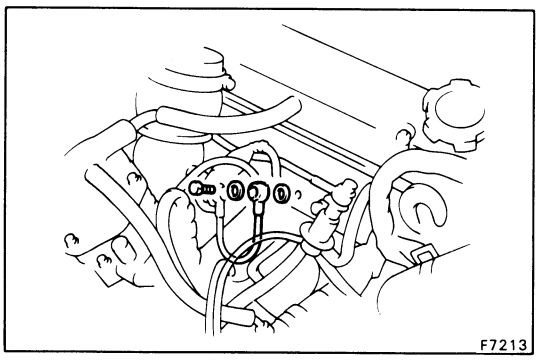

2. CHECK FUEL PRESSURE

(a) Check that battery voltage is above 12 volts.

(b) Disconnect the battery ground cable.

(c) Disconnect the wiring connector from the cold start injector.

(d) Place a suitable container or shop towel under the cold start injector pipe.

(e) Slowly loosen the union bolt of the cold start injector pipe and remove the bolt and two gaskets from the delivery pipe.

(f) Drain the fuel in the delivery pipe.

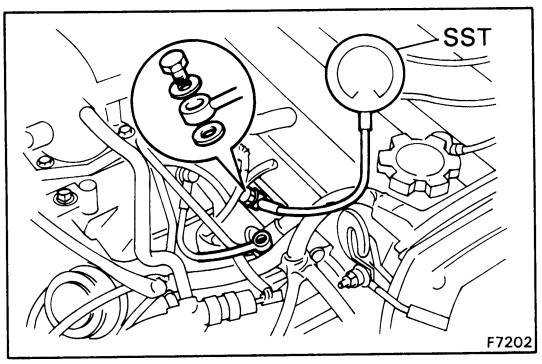

(g) Install a gasket, SST, another gasket and union bolt to the delivery pipe as shown in the figure.

SST 09268-45012

(h) Wipe off any splattered gasoline.

(i) Reconnect the battery cable.

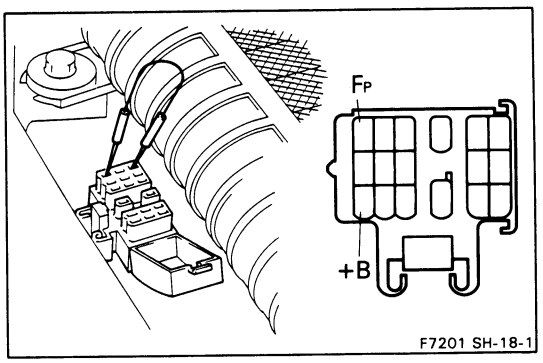

(j) Short the terminals Fp and +B of the check connector.

NOTE: The check connector is located near the intercooler.

(k) Turn on the ignition switch.

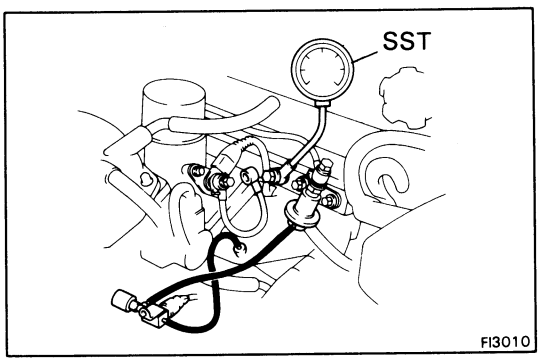

(l) Measure the fuel pressure.

Fuel pressure: 2.3 – 2.8 kg/cm^2 (33 – 40 psi, 265 – 304 kPa)

If high, replace the pressure regulator.

If low, check the following parts.

- Fuel hoses and connection
- Fuel Pump
- Fuel filter
- Pressure regulator

(m) Remove the service wire from the check connector.

(n) Start the engine.

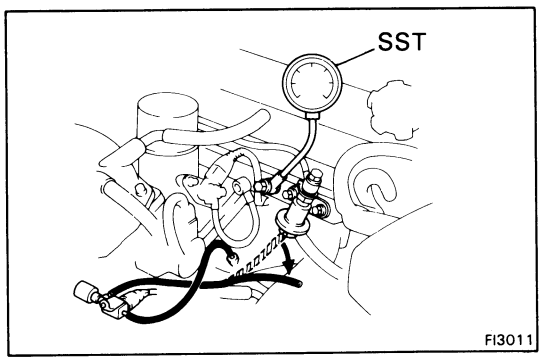

(o) Disconnect the vacuum sensing hose from the pressure regulator and plug it.

(p) Measure the fuel pressure at idling.

Fuel pressure: 2.3 – 2.8 kg/cm^2 (33 – 40 psi, 265 – 304 kPa)

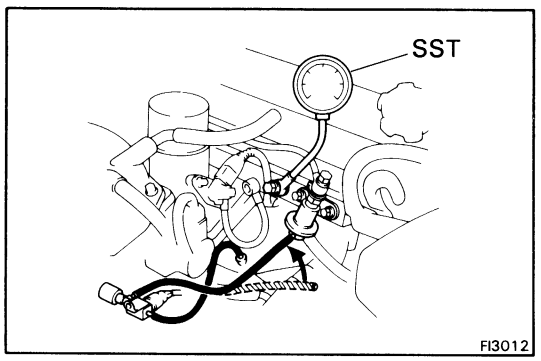

(q) Reconnect the vacuum sensing hose to the pressure regulator.

(r) Measure the fuel pressure at idling after 90 seconds.

Fuel pressure: 1.4 – 1.9 kg/cm^2 (20 – 27 psi, 137 – 186 kPa)

If no pressure, check the vacuum sensing hose and pressure regulator.

(s) Stop the engine. Check that the fuel pressure remains above 1.5 kg/cm^2 (21 psi, 147 kPa) for 5 minutes after the engine is turned off.

If not within specification, check the fuel pump, pressure regulator and/or injectors.

(t) After checking fuel pressure, disconnect the battery ground cable and carefully remove the SST to prevent gasoline from splashing.

(u) Using new gaskets, reconnect the cold start injector hose to the delivery pipe.

(v) Connect the wiring connector to the cold start injector.

(w) Check for fuel leakage.

REMOVAL OF FUEL PUMP

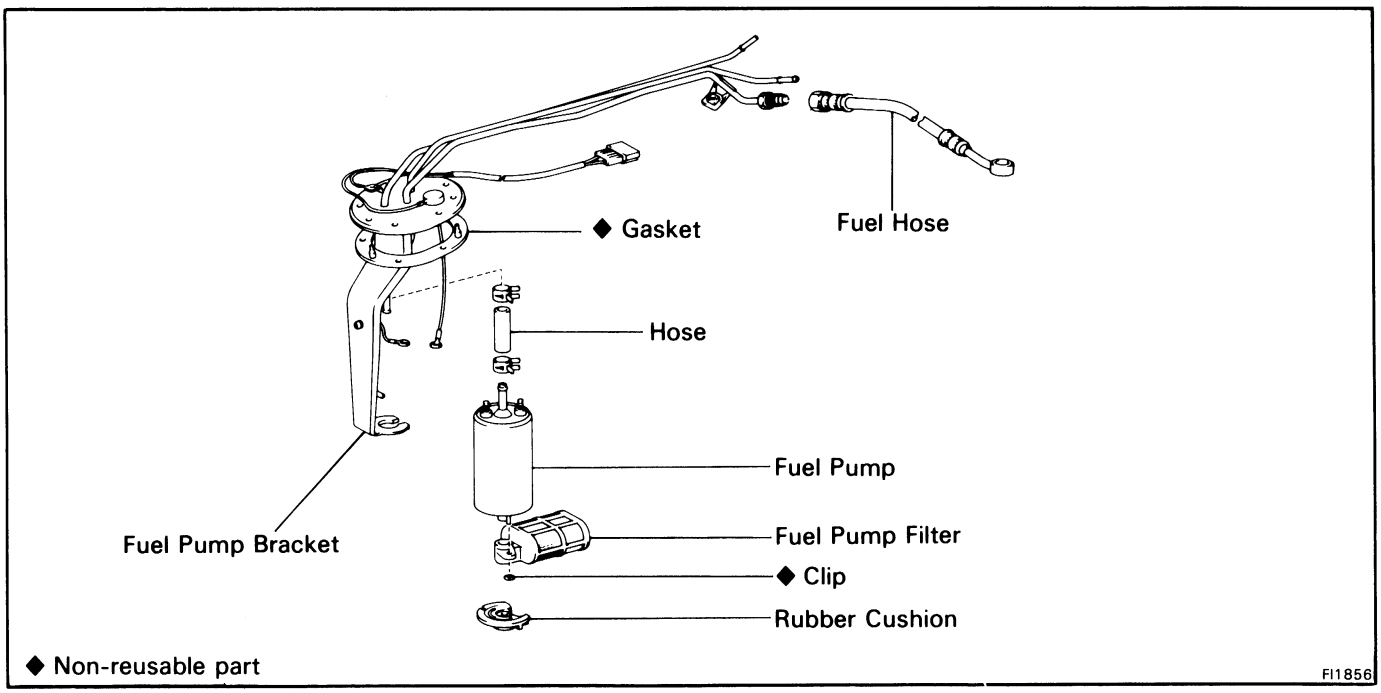

WARNING: Do not smoke or work near an open flame when working on the fuel pump.

1. **DRAIN GASOLINE FROM FUEL TANK**

2. **REMOVE FUEL TANK**

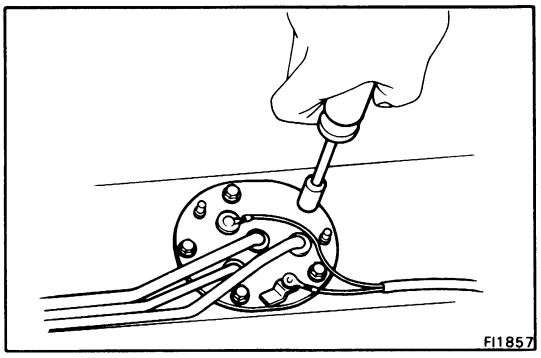

3. **REMOVE FUEL PUMP BRACKET FROM FUEL TANK**
   (a) Remove the clamp bolt from the fuel tank.
   (b) Remove the five bolts.
   (c) Pull out the fuel pump bracket.

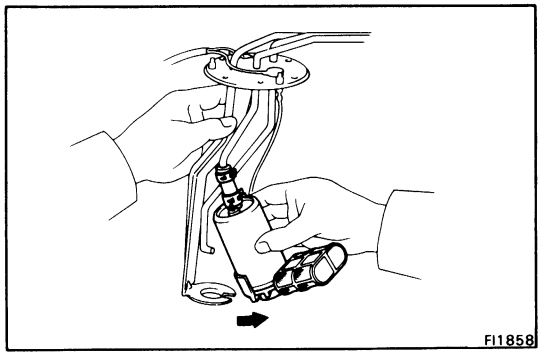

4. **REMOVE FUEL PUMP FROM FUEL PUMP BRACKET**
   (a) Remove the two nuts and disconnect the wires from the fuel pump.
   (b) Pull off the lower side of the fuel pump from the bracket.
   (c) Remove the fuel pump from the fuel hose.

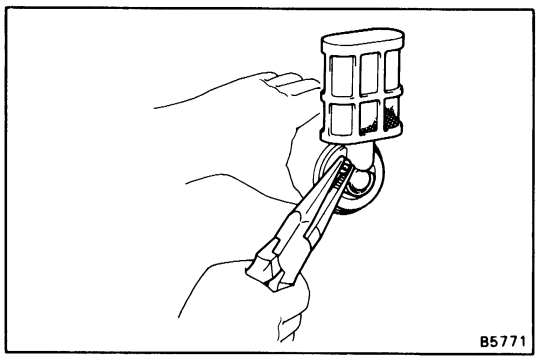

5. **REMOVE FUEL PUMP FILTER FROM FUEL PUMP**
   (a) Remove the rubber cushion.
   (b) Remove the clip and pull out the filter.

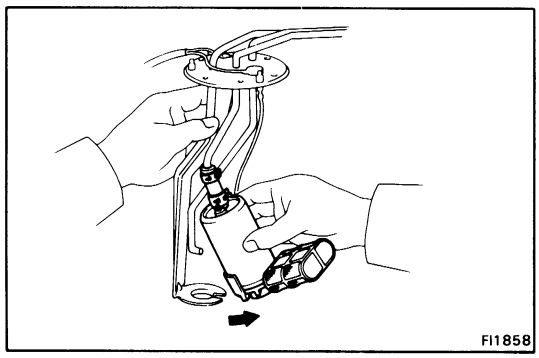

INSTALLATION OF FUEL PUMP

(See page FI-71)

1. **INSTALL FUEL PUMP FILTER TO FUEL PUMP**
2. **INSTALL FUEL PUMP TO FUEL PUMP BRACKET**
   (a) Insert the outlet port of the fuel pump into the fuel hose.
   (b) Install the rubber cushion to the lower side of the fuel pump.
   (c) Push the lower side of the fuel pump together with the rubber cushion into the fuel pump bracket.

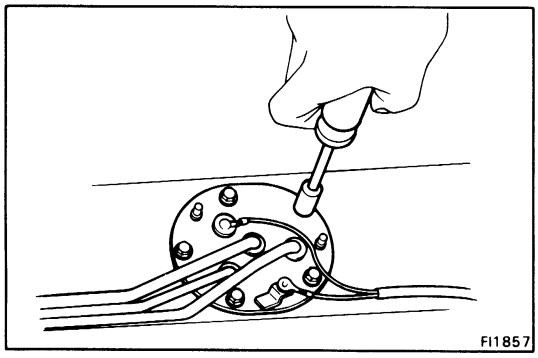

3. **INSTALL FUEL PUMP BRACKET**
   (a) Place the bracket with a new gasket on the fuel tank.
   (b) Install and torque the five screws.
   Torque: 20 — 60 kg-cm (18 — 52 in.-lb, 2.0 — 5.8 N·m)
   (c) Install the clamp bolt to the fuel tank.

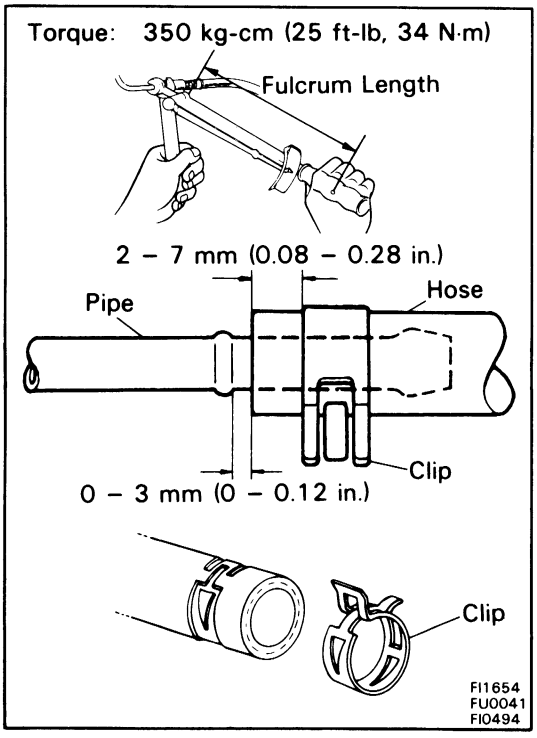

4. **INSTALL FUEL TANK**
   (a) Apply a thin coat of oil to the flare and tighten the flare nut.
   (b) Then using SST, tighten the nut to the specified torque.

   SST 09631-22020

   Torque: 310 kg-cm (22 ft-lb, 30 N·m)

   NOTE: Use a torque wrench with a fulcrum length of 30 cm (11.81 in.)

   CAUTION:
   - **Tighten the fuel tank mounting bolts, etc. to the specified torque.**
   - **Push in the pipe and insert-type hose to the specified position, and install the clip to the specified location.**
   - **If reusing the hose, reinstall the clip to the original location.**
5. **REFILL GASOLINE**

Cold Start Injector

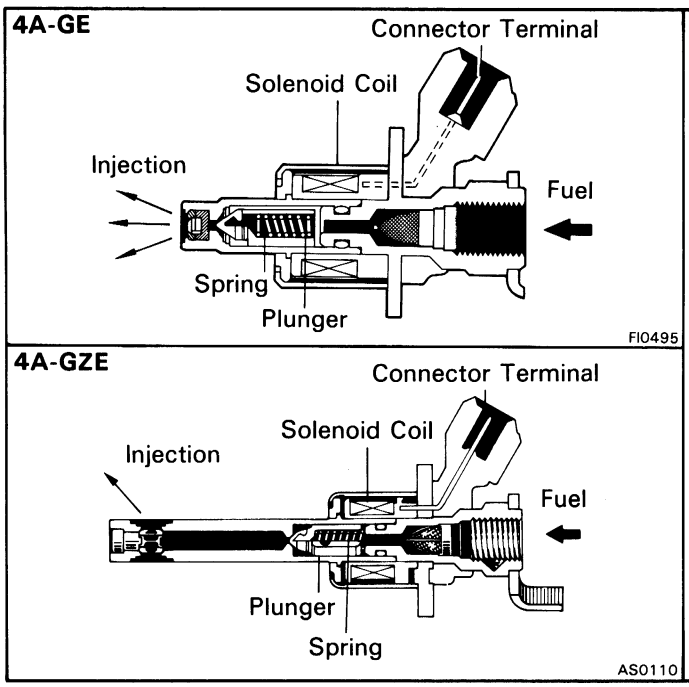

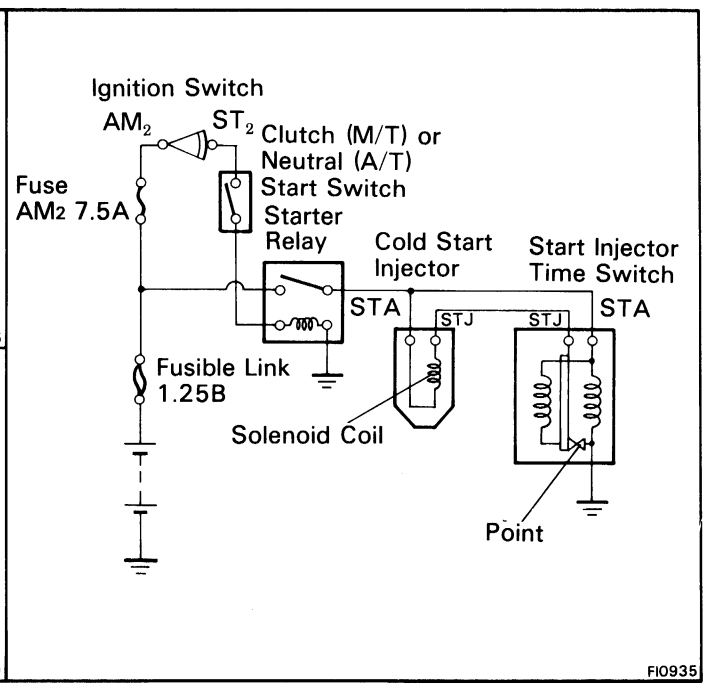

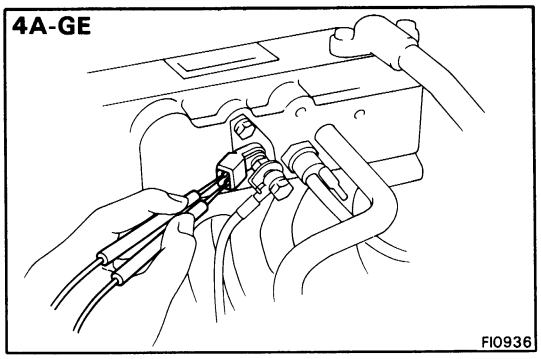

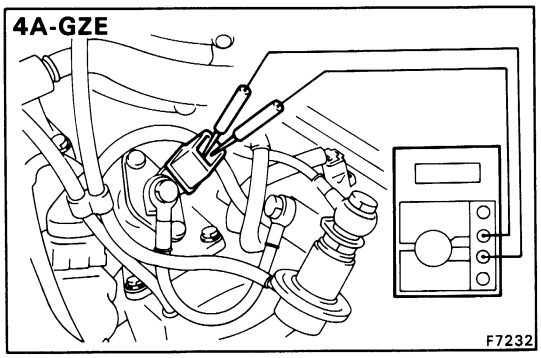

ON-VEHICLE INSPECTION

MEASURE RESISTANCE OF COLD START INJECTOR

(a) Disconnect the cold start injector connector.

(b) Using an ohmmeter, check the resistance of the injector.

Resistance: **4A-GE** **3 – 5 Ω**
4A-GZE **2 – 4 Ω**

(c) Connect the cold start injector connector.

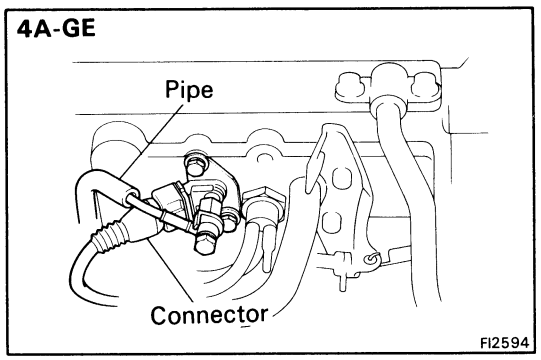

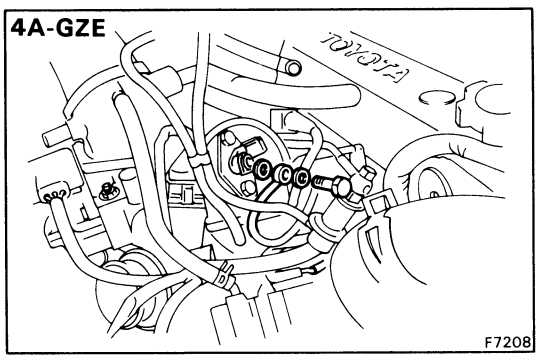

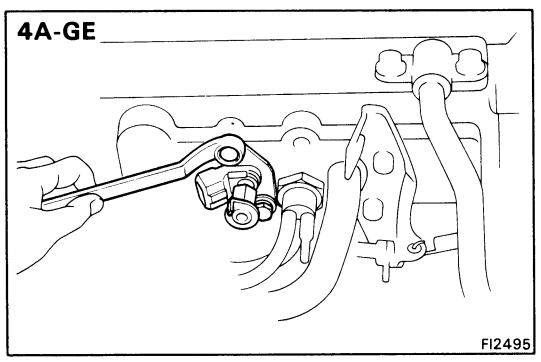

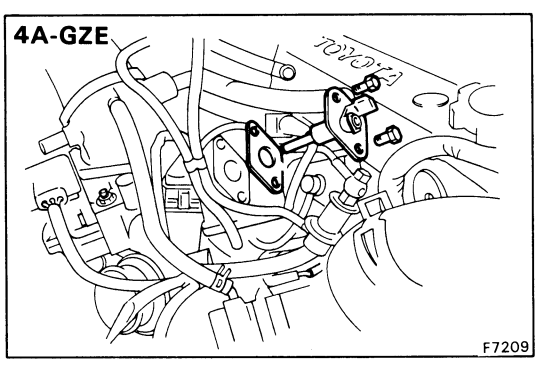

REMOVAL OF COLD START INJECTOR

1. **DISCONNECT CABLE FROM NEGATIVE TERMINAL OF BATTERY**

2. **DISCONNECT COLD START INJECTOR CONNECTOR**

3. **REMOVE COLD START INJECTOR PIPE**

   (a) Put a suitable container or shop towel under the cold start injector pipe.

   (b) Remove the two union bolts and the cold start injector pipe with the gaskets.

   NOTE: Slowly loosen the union bolts.

4. **REMOVE COLD START INJECTOR**

   Remove the two bolts and cold start injector with the gasket.

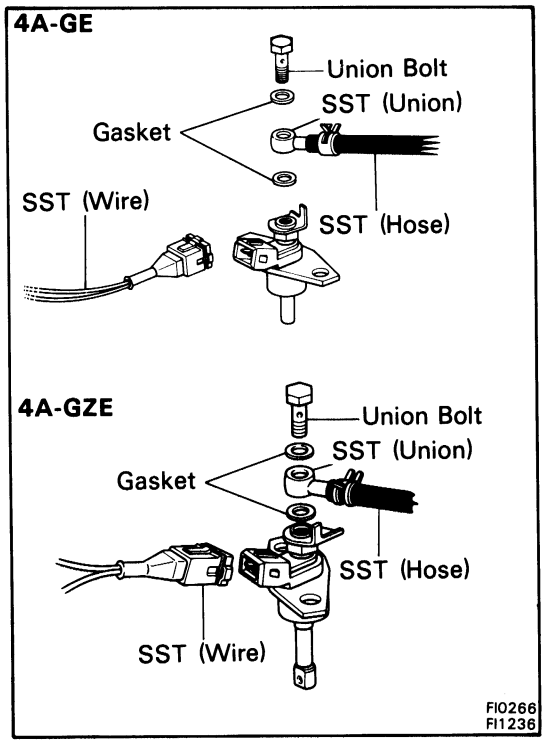

INSPECTION OF COLD START INJECTOR

CHECK INJECTION OF COLD START INJECTOR

(a) Install the gasket, SST (Two unions), another gasket and two union bolts to the delivery pipe and injector.

(b) Connect the SST (Hose) from the unions.

SST 09268-41045 (09268-41080)

(c) Connect the SST (Wire) to the injector.

SST 09842-30050

WARNING: Position the injector as far away from the battery as possible.

(d) Put a container under the injector.

(e) Turn the ignition switch ON.

NOTE: Do not start the engine.

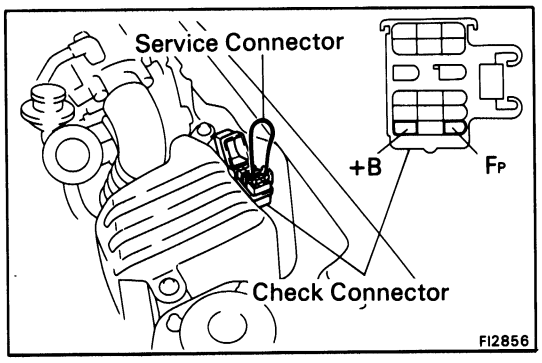

(f) Short terminals F_P and +B of the check connector with a service wire.

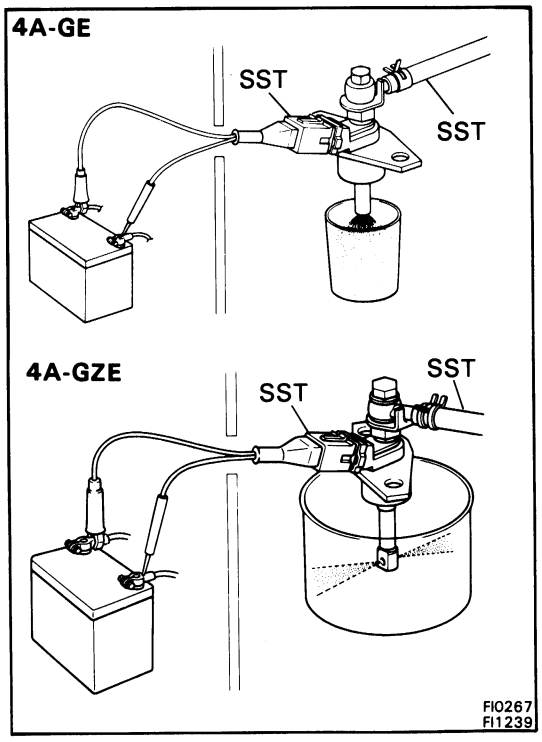

(g) Connect the test probes of the SST to the battery and check that the fuel spray is as shown.

SST 09842-30050

CAUTION: Perform this check within the shortest possible time.

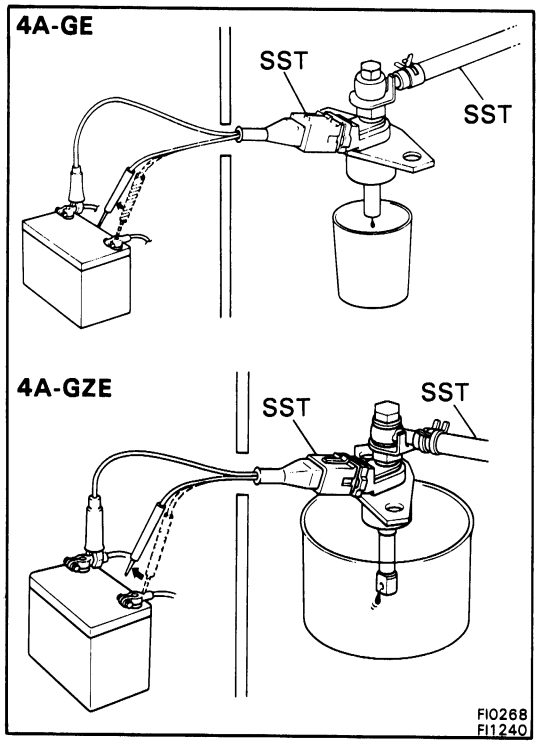

(h) Disconnect the test probes from the battery and check that there is less than one drop of fuel per minute from the injector.

(i) After checking, remove SST and restore the following parts to their original condition.

- Fuel pump check connector
- Ignition switch OFF
- Cold start injector
- Injector wiring

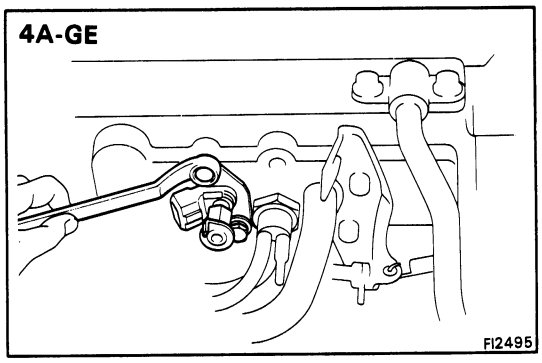

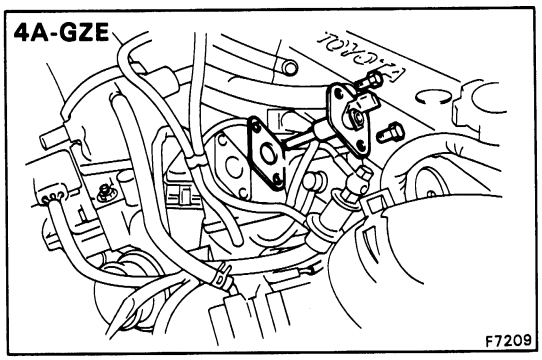

INSTALLATION OF COLD START INJECTOR

1. INSTALL COLD START INJECTOR

Place on a new gasket and install the cold start injector with the two bolts.

Torque: 75 kg-cm (65 in-lb, 7.4 N·m)

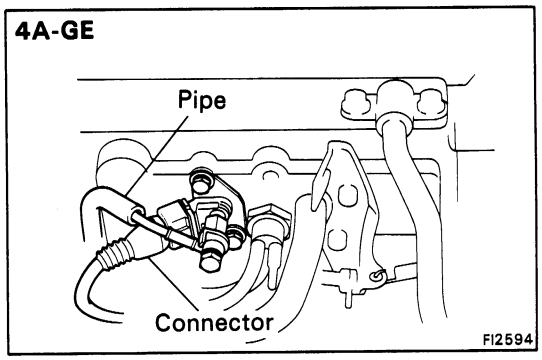

2. INSTALL COLD START INJECTOR PIPE

Using new gaskets, connect the cold start injector pipe to the delivery pipe and cold start injector. Install the union bolts.

Torque: 180 kg-cm (13 ft-lb, 18 N·m)

3. CONNECT COLD START INJECTOR CONNECTOR

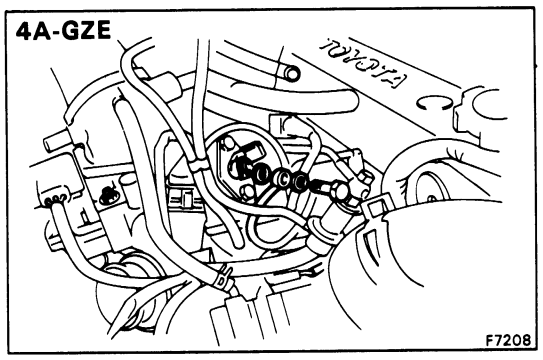

4. CONNECT CABLE TO NEGATIVE TERMINAL OF BATTERY

5. CHECK FOR FUEL LEAKAGE

Pressure Regulator (4A-GE)

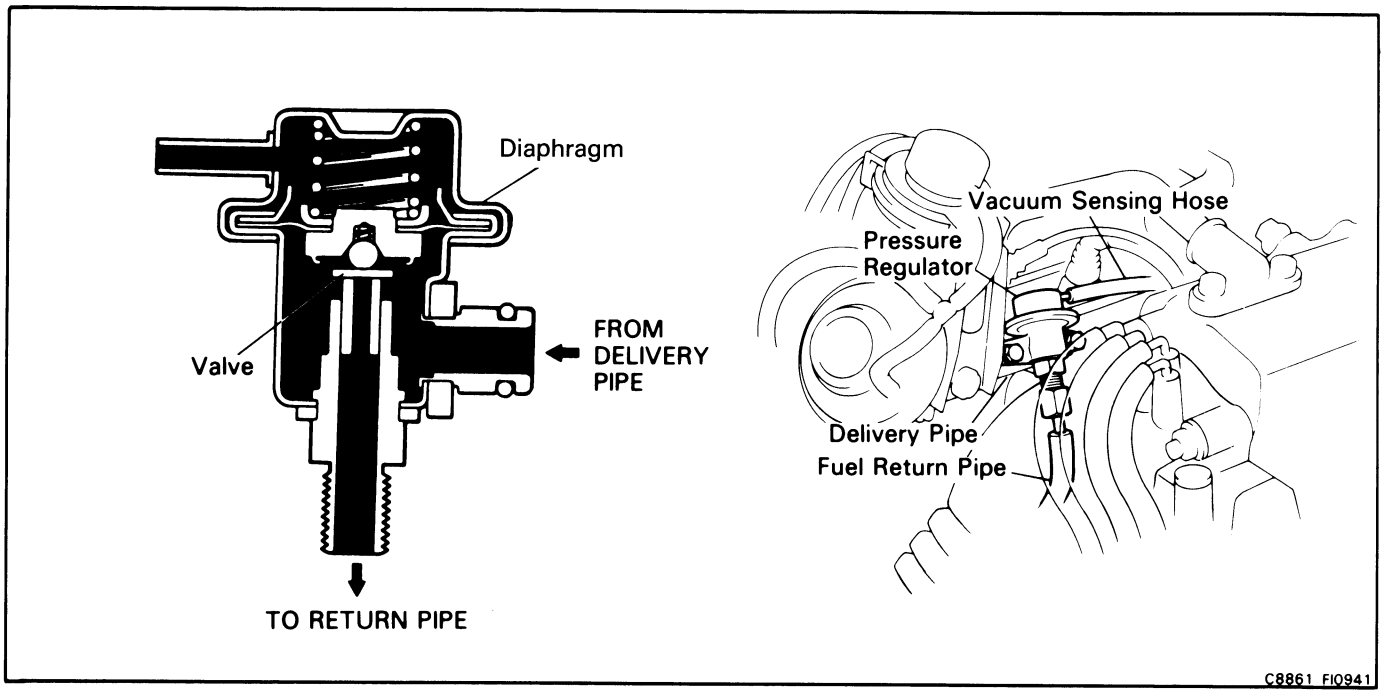

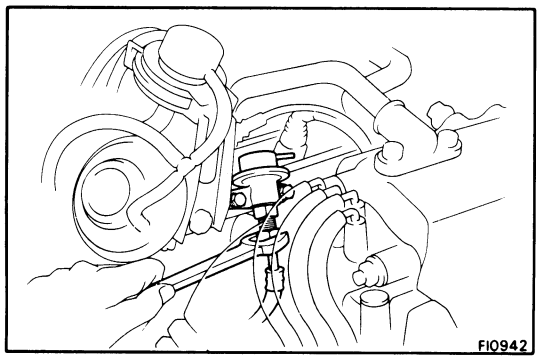

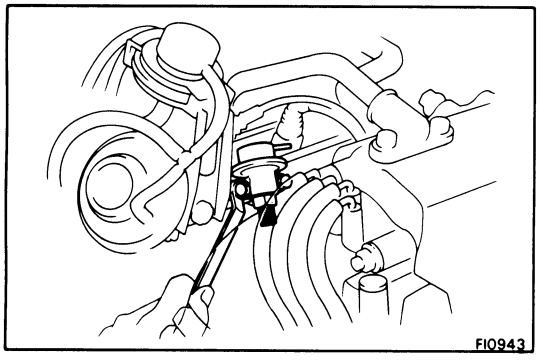

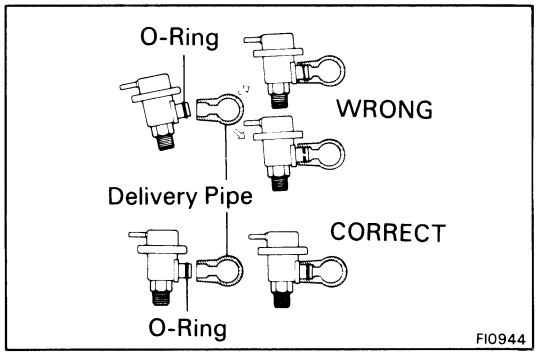

ON-VEHICLE INSPECTION

CHECK FUEL PRESSURE (See page FI-40)

REMOVAL OF PRESSURE REGULATOR

1. **DISCONNECT VACUUM SENSING HOSE FROM PRESSURE REGULATOR**
2. **DISCONNECT FUEL PIPE FROM PRESSURE REGULATOR**
   (a) Put a suitable container or shop towel under the pressure regulator.
   (b) Remove the flare nut and fuel pipe.
3. **REMOVE PRESSURE REGULATOR**
   Remove the two bolts and pull out the pressure regulator from the delivery pipe.

INSTALLATION OF PRESSURE REGULATOR

1. **INSTALL PRESSURE REGULATOR**
   Install a new o-ring and the pressure regulator, ana torque the two bolts.
   Torque: 75 kg-cm (65 in-lb, 7.4 N·m)
2. **CONNECT FUEL PIPE**
   Torque: 300 kg-cm (22 ft-lb, 29 N·m)
3. **CONNECT VACUUM SENSING HOSE**
4. **CHECK FOR FUEL LEAKAGE (See page FI-8)**

Pressure Regulator (4A-GZE)

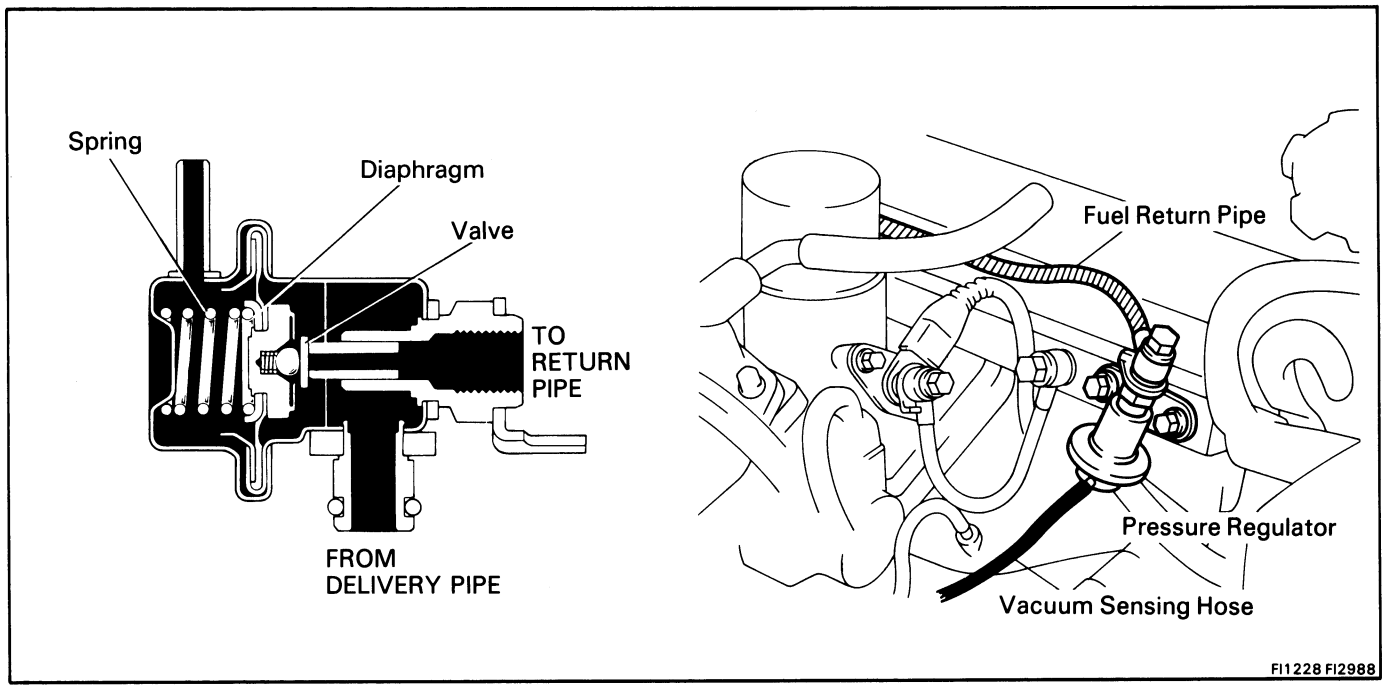

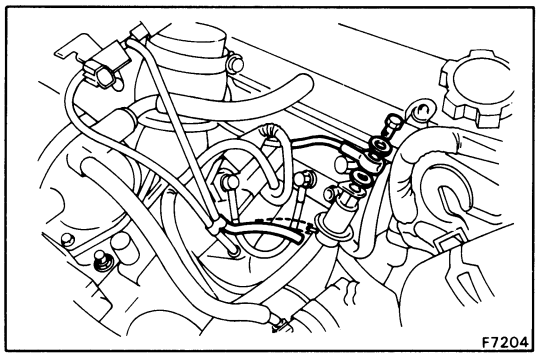

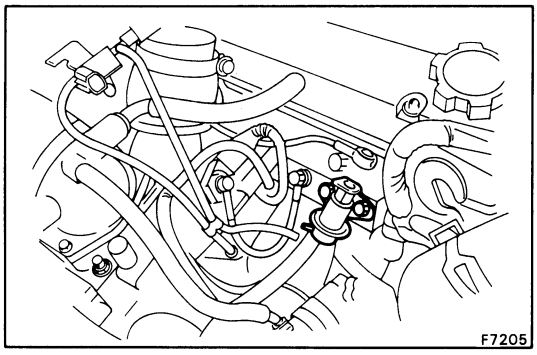

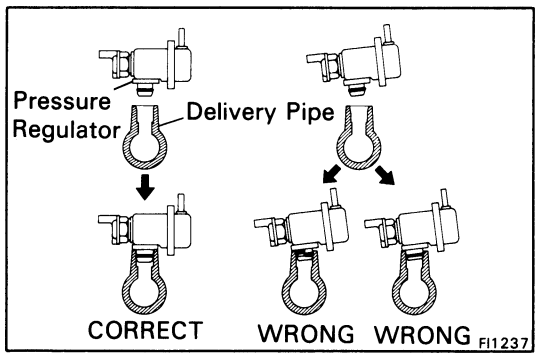

ON-VEHICLE INSPECTION

CHECK FUEL PRESSURE (See page FI-65)

REMOVAL OF PRESSURE REGULATOR

1. **DISCONNECT VACUUM SENSING HOSE FROM PRESSURE REGULATOR**

2. **DISCONNECT FUEL PIPE FROM PRESSURE REGULATOR**
   (a) Put a suitable container or shop towel under the pressure regulator.
   (b) Remove the union bolt, two gaskets and disconnect the fuel pipe.

3. **REMOVE PRESSURE REGULATOR**
   Remove the two bolts and pull out the pressure regulator from the delivery pipe.

INSTALLATION OF PRESSURE REGULATOR

1. **INSTALL PRESSURE REGULATOR**
   Install a new o-ring and the pressure regulator, and torque the two bolts.
   Torque: 75 kg-cm (65 in-lb, 7.4 N·m)

2. **CONNECT FUEL HOSE**
   Install two new gasket, fuel hose and union bolt.
   Torque: 150 kg-cm (11 ft-lb, 15 N·m)

3. **CONNECT VACUUM SENSING HOSE**

4. **CHECK FOR FUEL LEAKAGE (See page FI-8)**

Injector

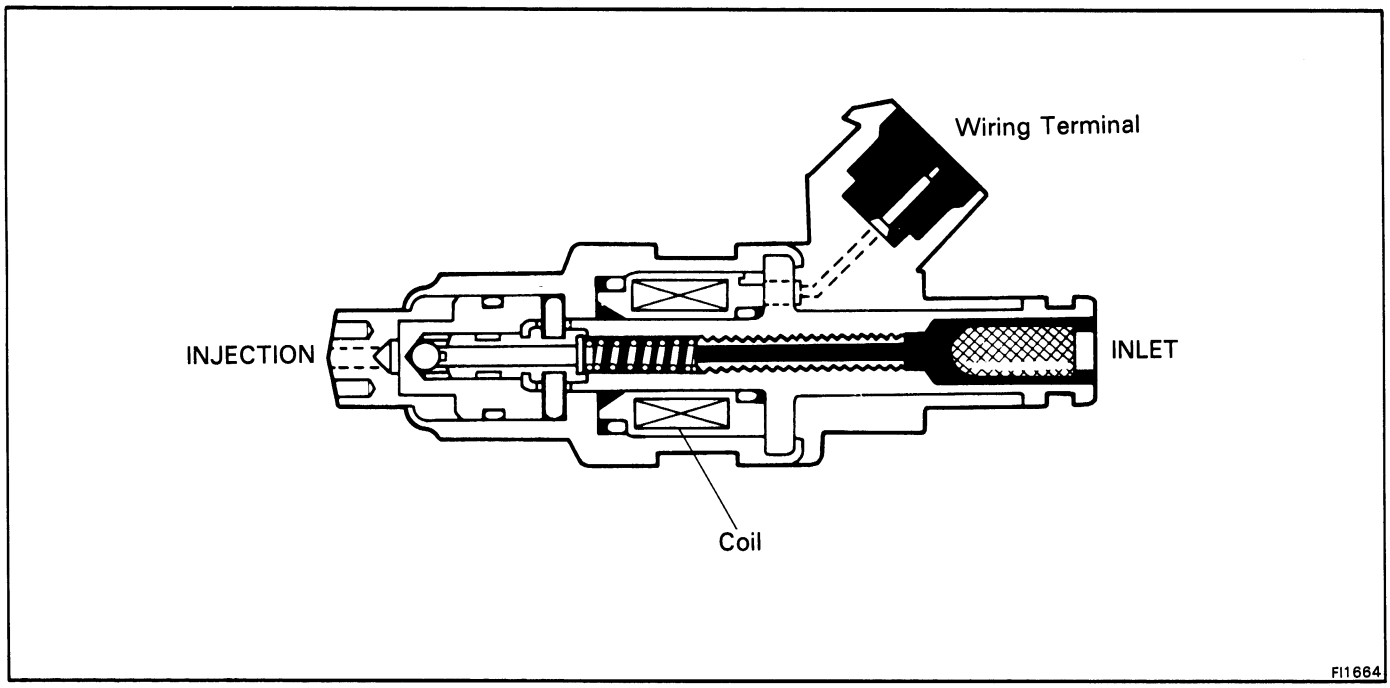

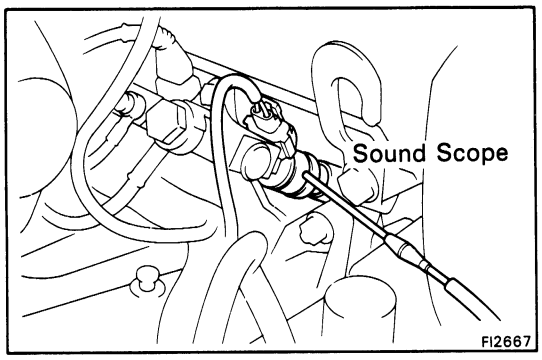

ON-VEHICLE INSPECTION

1. CHECK INJECTOR OPERATION

Check the operating sound from each injector.

(a) With the engine running or cranking, use a sound scope to check that there is normal operating noise in proportion to engine rpm.

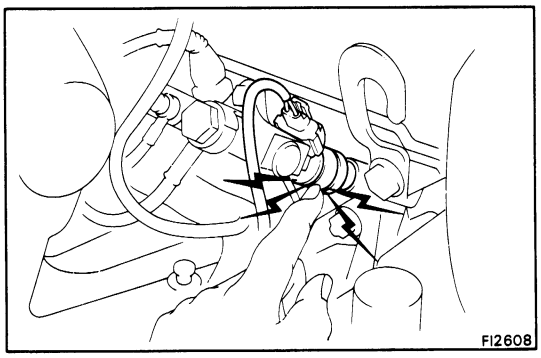

(b) If you have no sound scope, you can check the injector transmission operation with your finger.

If no sound or an unusual sound is heard, check the wiring connector, injector, resistor or injection signal from the computer.

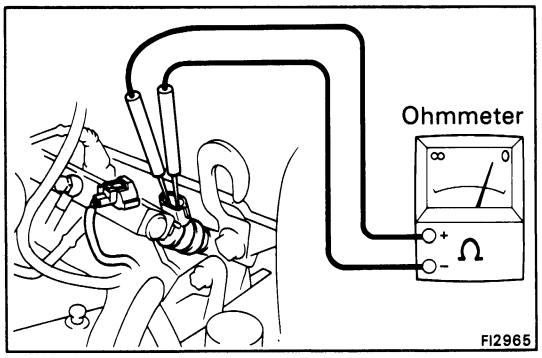

2. MEASURE RESISTANCE OF INJECTOR

(a) Disconnect the injector connector.

(b) Using an ohmmeter, check the resistance of both terminals.

Resistance:	**4A-GE**	**Approx. 13.8 Ω**
	4A-GZE	**Approx. 2.9 Ω**

REMOVAL OF INJECTOR (4A-GE)

1. **DISCONNECT CABLE FROM NEGATIVE TERMINAL OF BATTERY**

2. **DISCONNECT FOLLOWING HOSES:**
   (a) PCV hose from cylinder head cover
   (b) Vacuum sensing hose from pressure regulator

3. **REMOVE PRESSURE REGULATOR**
   (See page FI-78)

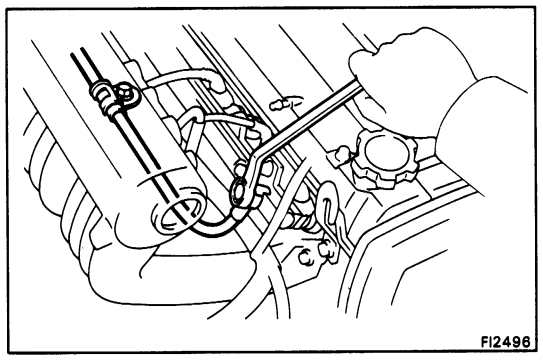

4. **REMOVE COLD START INJECTION PIPE**
   (See step 3 on page FI-74)

5. **DISCONNECT FUEL PIPE**
   (a) Remove the inlet pipe mounting bolt.
   (b) Remove the union bolt, two gaskets and fuel pipe.

6. **DISCONNECT INJECTOR CONNECTORS**

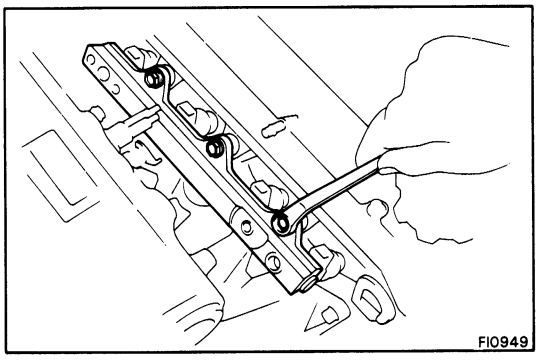

7. **REMOVE DELIVERY PIPE**
   (a) Remove the three bolts, and then remove the delivery pipe with the injectors.

   NOTE: When removing the delivery pipe, be careful not to drop the injectors.

   (b) Remove the four insulators and three collars from the cylinder head.

8. **REMOVE INJECTORS**
   Pull out the injectors from the delivery pipe.

REMOVAL OF INJECTOR (4A-GZE)

1. **DISCONNECT CABLE FROM NEGATIVE TERMINAL OF BATTERY**

2. **REMOVE THROTTLE BODY (See page FI-99)**

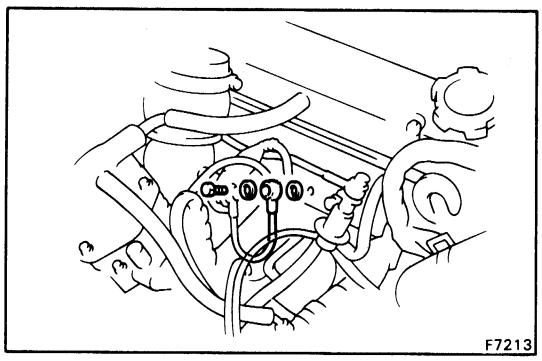

3. **DISCONNECT COLD START INJECTOR PIPE**
   (a) Disconnect the cold start injector connector.
   (b) Remove the union bolt and two gaskets, and disconnect the fuel pipe.

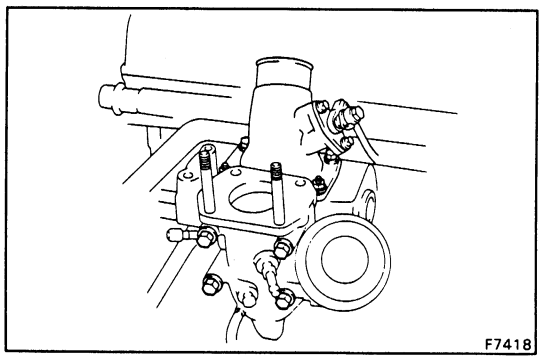

4. **LOOSEN AIR OUT LET DUCT**
   Loosen the two bolts, two nuts of air outlet duct.

5. **REMOVE ACCELERATOR CABLE BRACKET**

6. **DISCONNECT INJECTOR CONNECTORS**

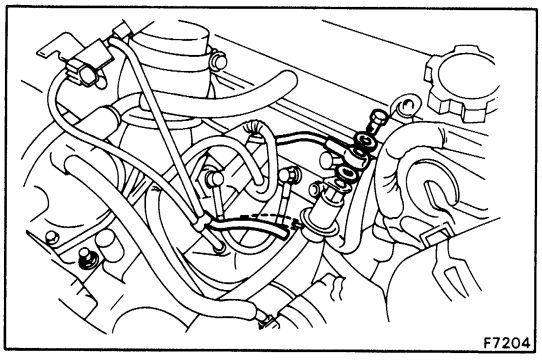

7. **DISCONNECT FUEL RETURN PIPE**
   (a) Remove the clamp bolt, union bolt and two gaskets, and disconnect the fuel pipe.
   (b) Disconnect the vacuum hose from pressure regulator.

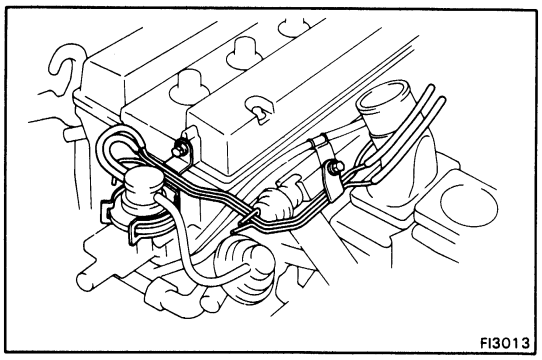

8. **DISCONNECT EGR VACUUM HOSE FROM MODULATOR**

9. **REMOVE VACUUM PIPE**
   Remove the three clamp bolts and vacuum pipe.

10. **REMOVE PRESSURE REGULATOR (See page FI-79)**

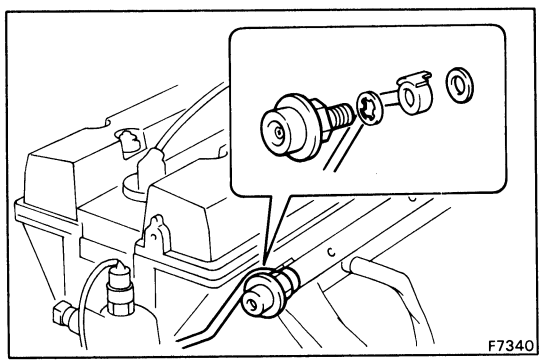

8. REMOVE FUEL INLET PIPE

(a) Remove the clamp bolt.

(b) Remove the pulsation damper and two gaskets, and disconnect the fuel inlet pipe from the delivery pipe.

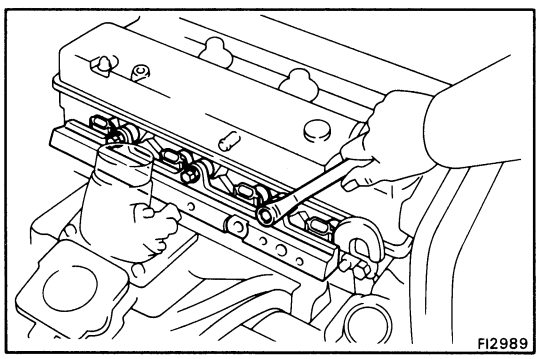

9. REMOVE DELIVERY PIPE

(a) Remove the three bolts,and then remove the delivery pipe with the injectors.

NOTE: When removing the delivery pipe, be careful not to drop the injectors.

(b) Remove the four insulators and three collars from the cylinder head.

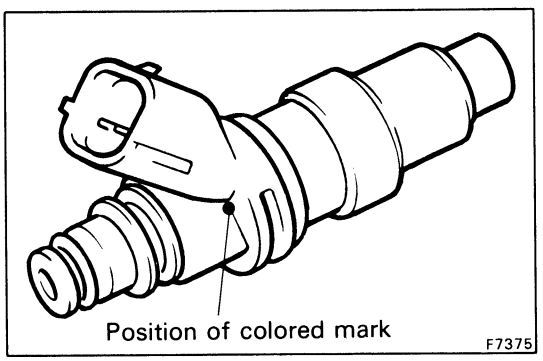

10. REMOVE INJECTORS

Pull out the injectors from the delivery pipe.

CAUTION: When replacing the injector, replace it with one having the same-colored painted mark. Colors: blue, yellow, black, white.

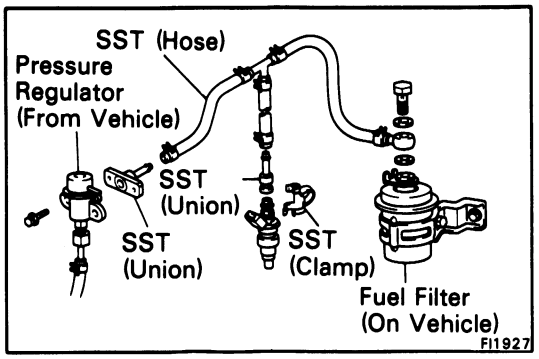

INSPECTION OF INJECTOR (4A-GE)

1. TEST INJECTION OF INJECTORS

WARNING: Keep clear of sparks during the test.

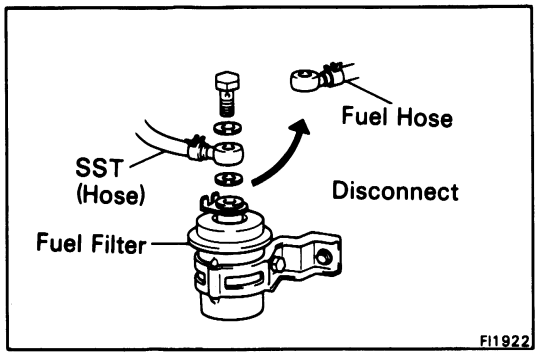

(a) Disconnect the fuel hose from the fuel filter outlet.

(b) Connect SST (Union) to the fuel filter outlet.

SST 09268-41045 (90405-09015)

NOTE: Use the vehicle's fuel filter.

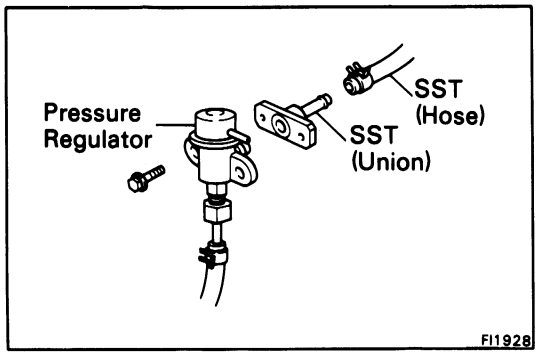

(c) Install SST (Union) to the removed pressure regulator.

SST 09268-41045 (09268-41090)

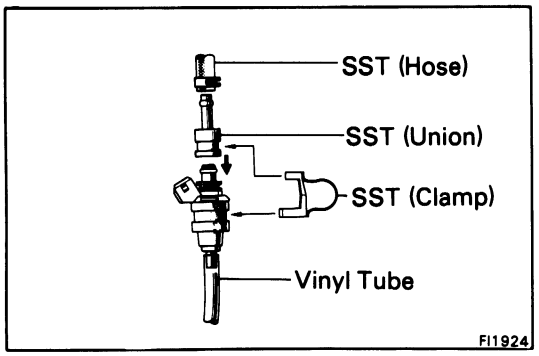

(d) Install SST (Union) to the injector and hold the injector and union with SST (Clamp.)

SST 09268-41045

(e) Put the injector into the graduated cylinder.

NOTE: Install a suitable vinyl tube onto the injector to prevent gasoline from splashing out.

(f) Connect the battery cable.

(g) Turn the ignition switch ON.

NOTE: Do not start the engine.

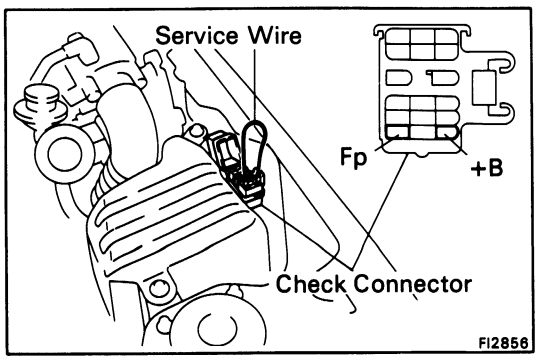

(h) Using a service wire, short terminals Fp and +B of the check connector.

NOTE:
- The fuel pump will operate.
- The check connector is located near the resonator.

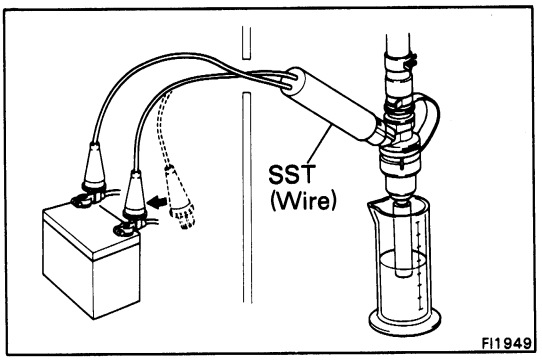

(i) Connect SST (Resistor Wire) to the injector and battery for 15 seconds and measure the injection volume with a graduated cylinder.

Test each injector two or three times. If not within specified volume, replace the injector.

SST 09842-30070

Volume: 45 – 55 cc/15 sec. (2.7 – 3.4 cu in.)
Difference between each injector:
Less than 5 cc (0.3 cu in.)

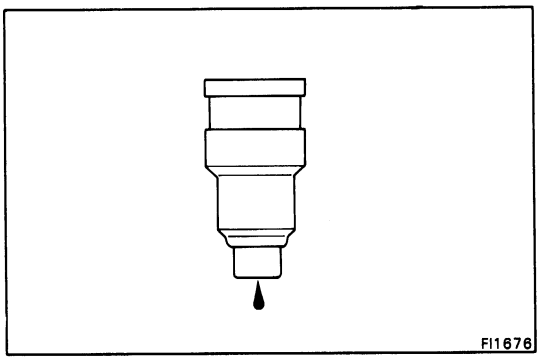

2. CHECK LEAKAGE

(a) In the condition above, disconnect SST from the battery and check for fuel leakage from the injector nozzle.

SST 09842-30070

Fuel drop: Less than one fuel drop of fuel per minute

(b) Disconnect the battery cable.

(c) Remove the SST and disconnect the service wire from the terminals Fp and +B.

SST 09268-41045

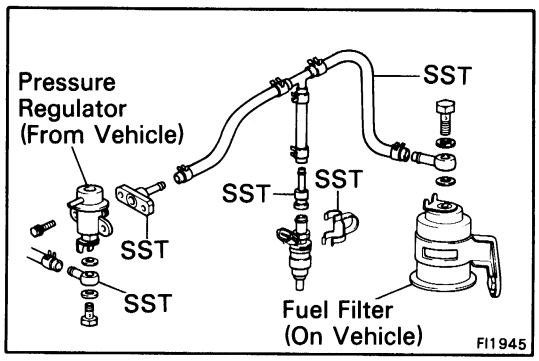

INSPECTION OF INJECTOR (4A-GZE)

1. TEST INJECTION OF INJECTORS

WARNING: Keep clear of sparks during the test.

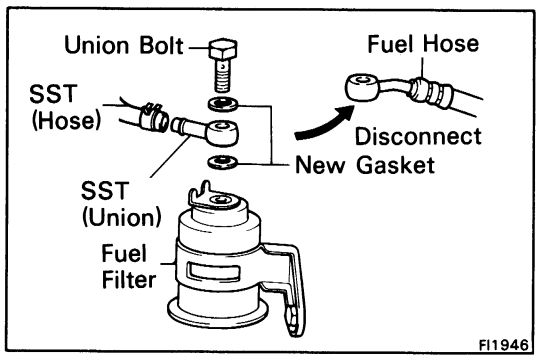

(a) Disconnect the fuel hose from the fuel filter outlet.

(b) Connect SST (Union) to the fuel filter outlet.

SST 09268-41045 (90405-09015)

NOTE: Use the vehicle's fuel filter.

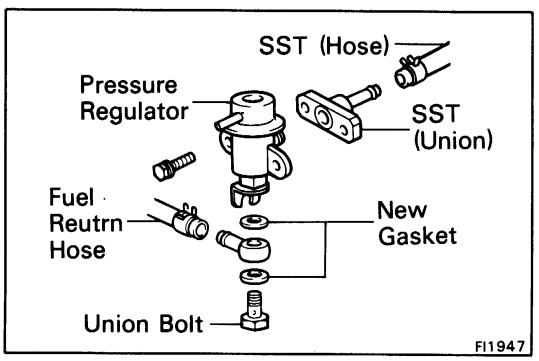

(c) Install SST (Union) to the removed pressure regulator.

SST 09268-41045 (09268-41090)

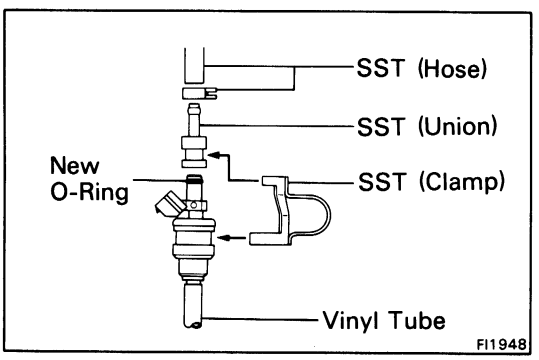

(d) Install SST (Union) to the injector and hold the injector and union with SST (Clamp.)

SST 09268-41045

(e) Put the injector into the graduated cylinder.

NOTE: Install a suitable vinyl tube onto the injector to prevent gasoline from splashing out.

(f) Connect the battery cable.

(g) Turn the ignition switch ON.

NOTE: Do not start the engine.

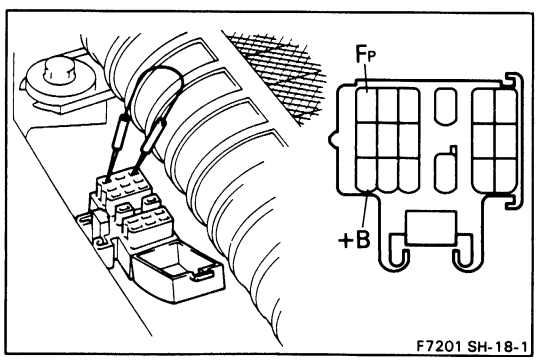

(h) Using a service wire, short terminals Fp and +B of the check connector.

NOTE:
- The fuel pump will operate.
- The check connector is located near the intercooler.

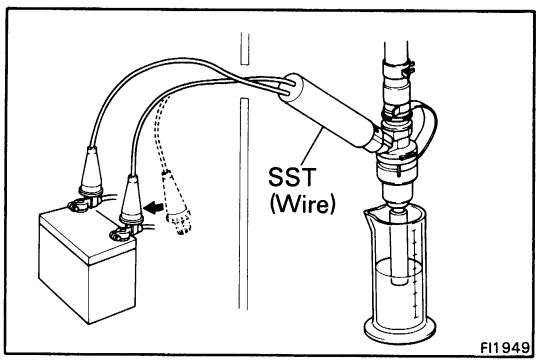

(i) Connect SST (Resistor Wire) to the injector and battery for 15 seconds and measure the injection volume with a graduated cylinder.

Test each injector two or three times. If not within specified volume, replace the injector.

SST 09842-30060

Volume: 80 – 100 cc/15 sec. (4.9 – 6.1 cu in.)
Difference between each injector:
Less than 5 cc (0.3 cu in.)

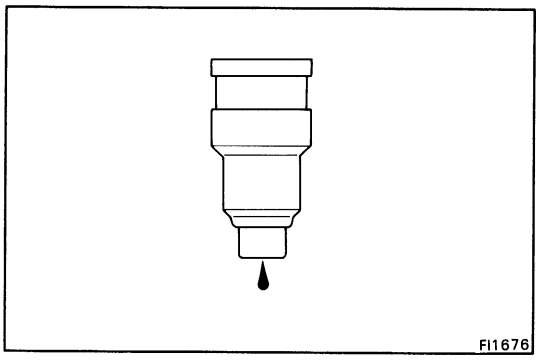

2. CHECK LEAKAGE

(a) In the condition above, disconnect SST from the battery and check for fuel leakage from the injector nozzle.

SST 09842-30060

Fuel drop: Less than one fuel drop of fuel per minute

(b) Disconnect the battery cable.

(c) Remove the SST and disconnect the service wire from the terminals Fp and +B.

SST 09268-41045

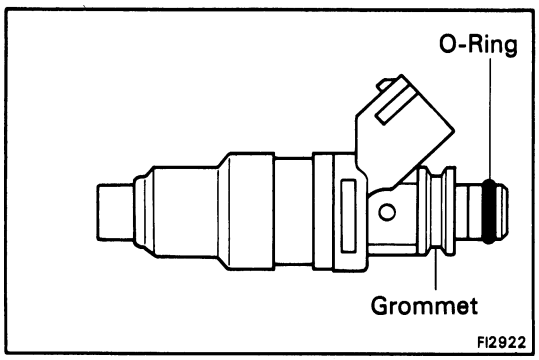

INSTALLATION OF INJECTORS (4A-GE)

1. INSTALL INJECTORS INTO DELIVERY PIPE

(a) Replace the O-ring on to the injector.

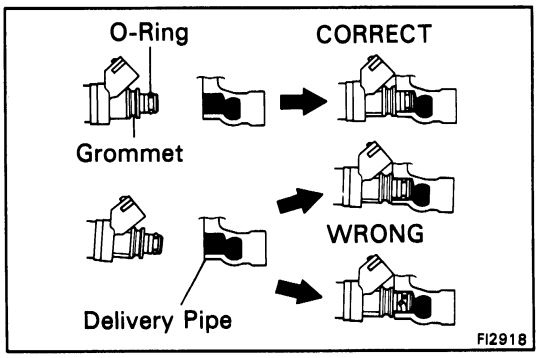

(b) Apply a thin coat of gasoline to the O-rings and install the injectors into the delivery pipe.

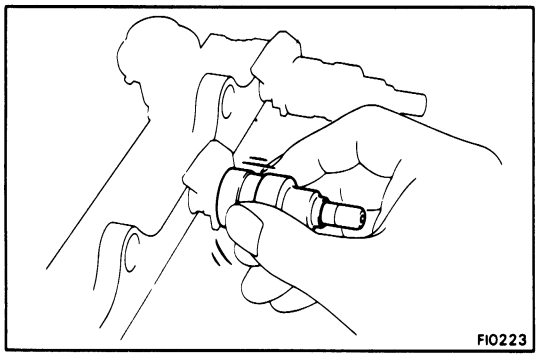

(c) Make sure that the injectors rotate smoothly.

NOTE: If the injectors do not rotate smoothly, the probable cause is incorrect installation of O-rings. Replace the O-rings.

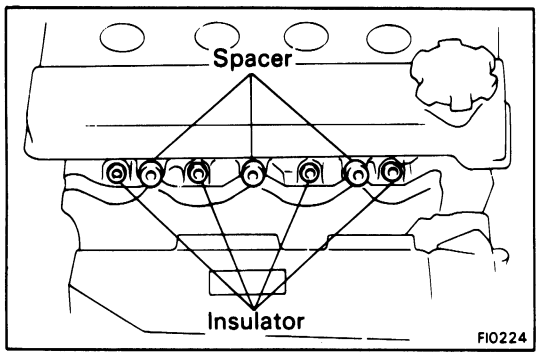

2. INSTALL DELIVERY PIPE WITH INJECTORS

(a) Install the four insulators into the injector hole of the cylinder head.

(b) Install the three collars on the delivery pipe mounting hole of the cylinder head.

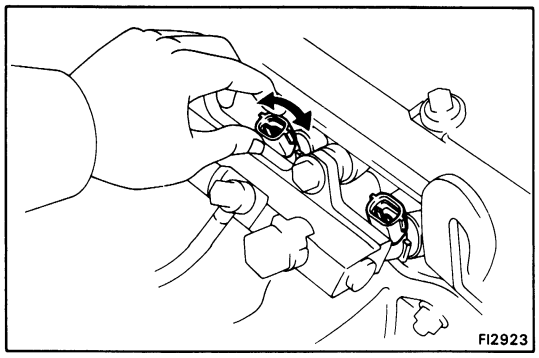

(c) Place the injectors together with the delivery pipe on the cylinder head.

(d) Make sure that the injectors rotate smoothly.

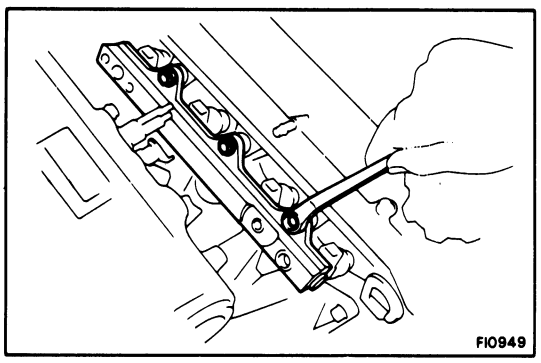

(e) Install the three thinner spacers and bolts.
Torque the bolts.

Torque: 175 kg-cm (13 ft-lb, 17 N·m)

3. CONNECT INJECTOR CONNECTORS

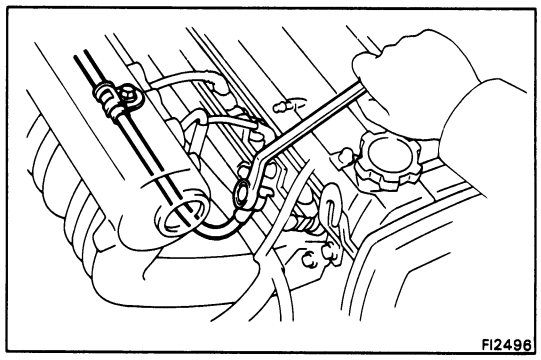

4. CONNECT FUEL INLET PIPE

(a) Place the fuel inlet pipe with two new gaskets on the delivery pipe.

(b) Install and torque the union bolt.

Torque: 300 kg-cm (22 ft-lb, 29 N·m)

5. INSTALL COLD START INJECTION PIPE (See steps 3 on page FI-74)

6. INSTALL PRESSURE REGULATOR (See page FI-78)

7. CONNECT FOLLOWING HOSES:

(a) PCV hose to the cylinder head cover.

(b) Vacuum sensing hose to the pressure regulator.

8. CONNECT CABLE TO NEGATIVE TERMINAL OF BATTERY

9. CHECK FOR FUEL LEAKAGE (See page FI-8)

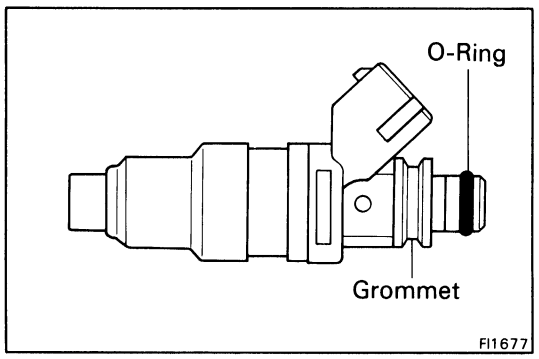

INSTALLATION OF INJECTORS (4A-GZE)

1. INSTALL INJECTORS INTO DELIVERY PIPE

(a) Replace the O-ring on to the injector.

(b) Apply a thin coat of gasoline to the O-rings and install the injectors into the delivery pipe.

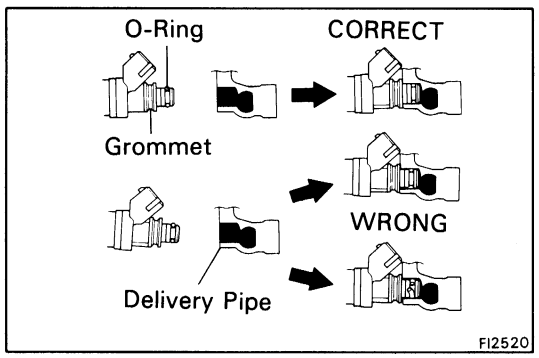

(c) Make sure that the injectors rotate smoothly.

NOTE: If the injectors do not rotate smoothly, the probable cause is incorrect installation of O-rings. Replace the O-rings.

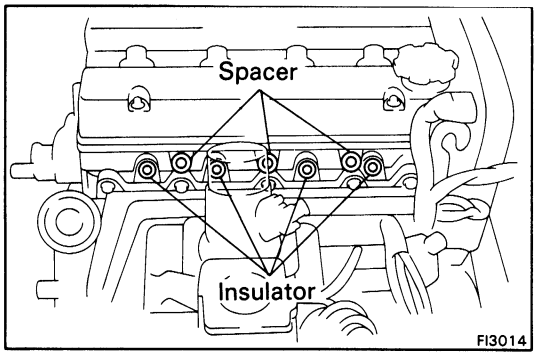

2. INSTALL DELIVERY PIPE WITH INJECTORS

(a) Install the four insulators into the injector hole of the cylinder head.

(b) Install the three collars on the delivery pipe mounting hole of the cylinder head.

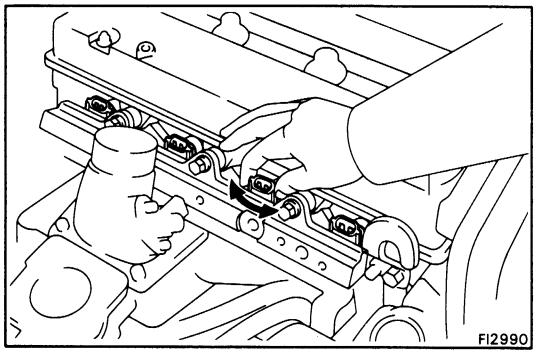

(c) Place the injectors together with the delivery pipe on the cylinder head.

(d) Make sure that the injectors rotate smoothly.

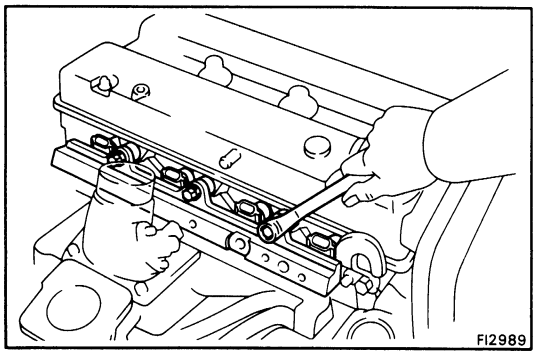

(e) Install the three thinner spacers and bolts.

Torque the bolts.

Torque: 175 kg-cm (13 ft-lb, 17 N·m)

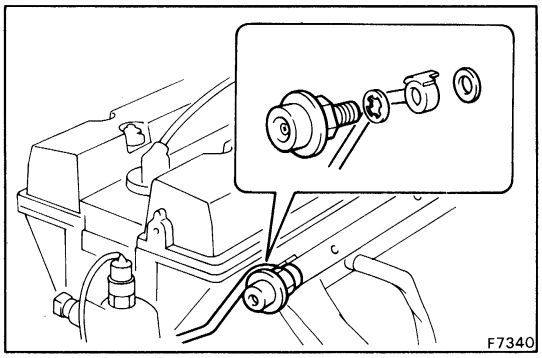

3. INSTALL FUEL INLET PIPE

(a) Place the fuel pipe with two new gaskets on the delivery pipe.

(b) Install and torque the union bolt.

Torque: 300 kg-cm (22 ft-lb, 29 N·m)

(c) Install the clamp bolt.

4. INSTALL PRESSURE REGULATOR
(See page FI-79)

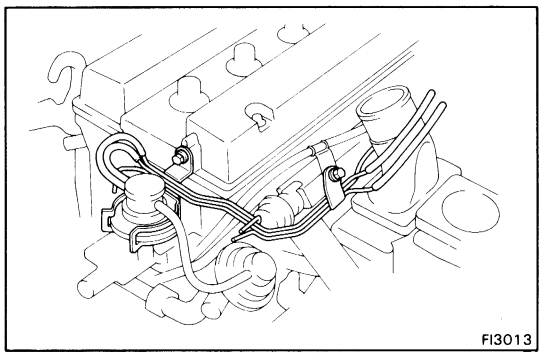

5. INSTALL VACUUM PIPE

Install the vacuum pipe and three clamp bolts.

6. CONNECT EGR VACUUM HOSE TO MODULATOR

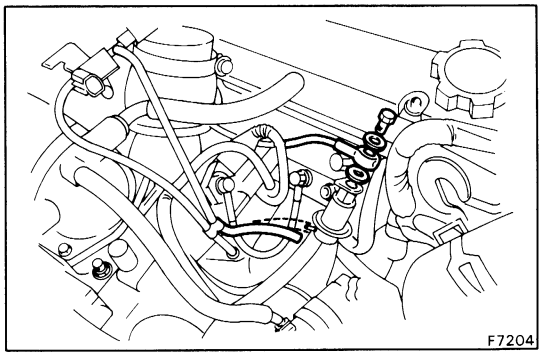

7. CONNECT FUEL RETURN PIPE

(a) Connect the vacuum hose to the pressure regulator.

(b) Place the fuel with two new gaskets on the pressure regulator.

(c) Install and torque the union bolt.

(d) Install the clamp bolt.

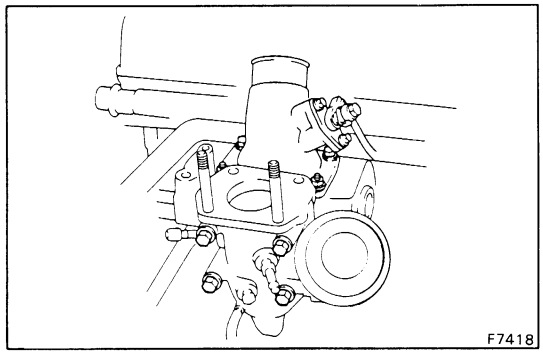

8. CONNECT INJECTOR CONNECTORS

9. INSTALL ACCELERATOR CABLE BRACKET

10. INSTALL AIR OUTLET DUCT

Tighten the two bolts and two nuts of air outlet duct.

Torque: 100 kg-cm (7 ft-lb, 10 N·m)

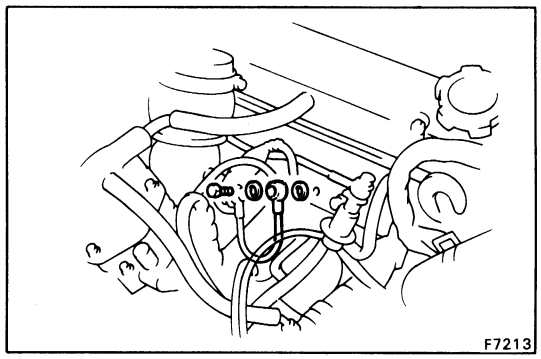

11. CONNECT COLD START INJECTOR PIPE

(a) Place the fuel pipe and two new gaskets.

(b) Install and torque the union bolt.

Torque: 150 kg-cm (11 ft-lb, 15 N·m)

(c) Connect the cold start injector connector.

12. INSTALL THROTTLE BODY (See page FI-104)

13. CONNECT CABLE TO NEGATIVE TERMINAL OF BATTERY

Fuel Tank and Line

COMPONENTS

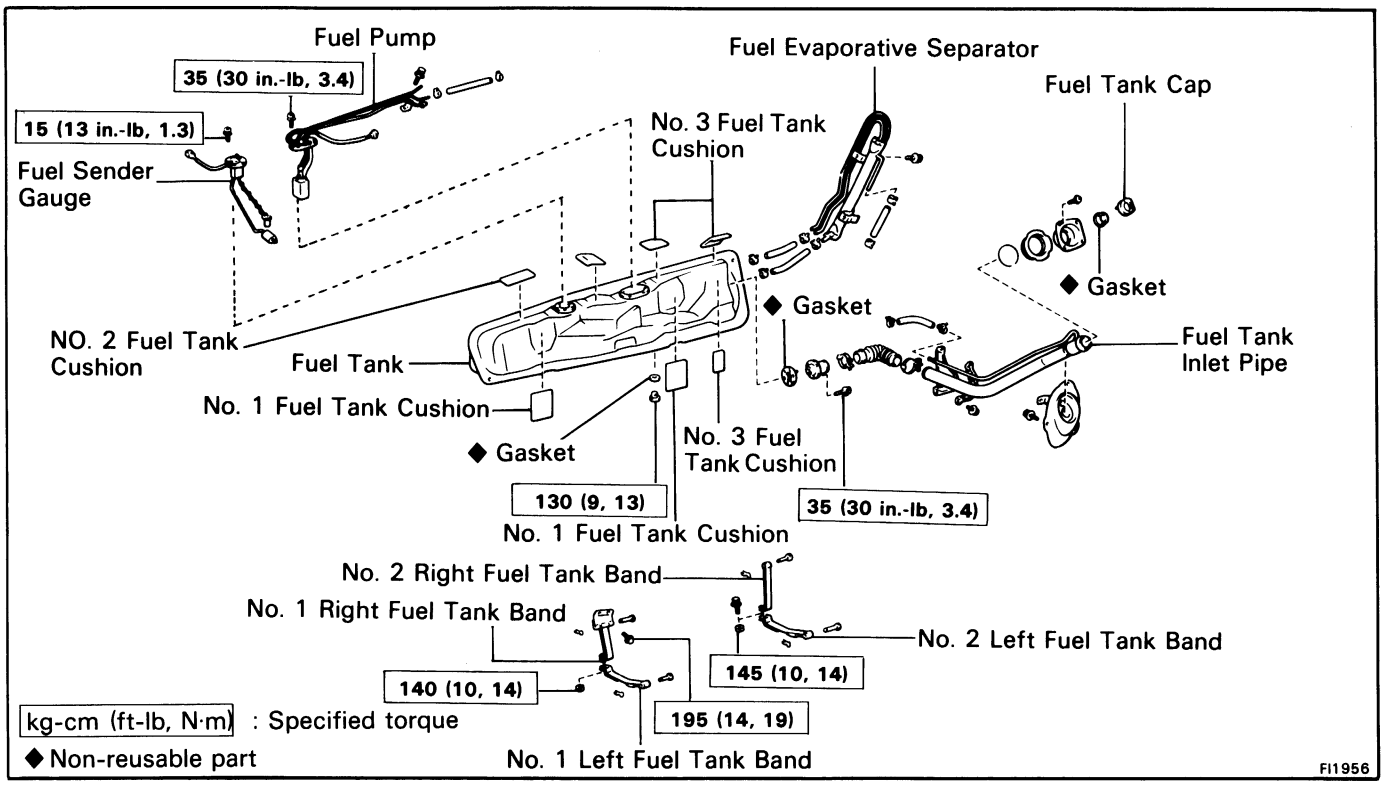

PRECAUTIONS

1. **Always use new gaskets when replacing the fuel tank or component part.**
2. **When re-installing, be sure to include the rubber protectors on the upper surfaces of the fuel tank and tank band.**
3. **Apply the proper torque to all parts tightend.**

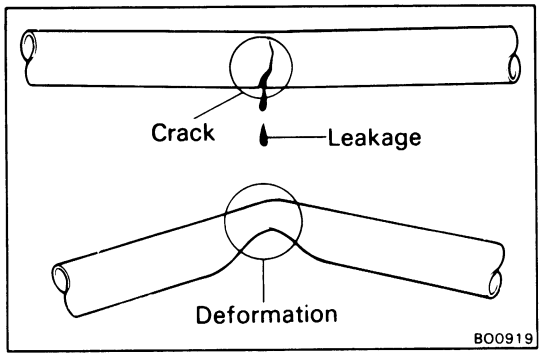

INSPECT FUEL LINES AND CONNECTIONS

(a) Inspect the fuel lines for cracks or leakage, and all connections for deformation.

(b) Inspect the fuel tank vapor vent system hoses and connections for looseness, kinks or damage.

(c) Inspect the fuel tank for deformation, cracks, fuel leakage or tank band looseness.

(d) Inspect the filler neck for damage or fuel leakage.

(e) Hose and tube connections are as shown in the illustration.

If a problem is found, repair or replace the parts as necessary.

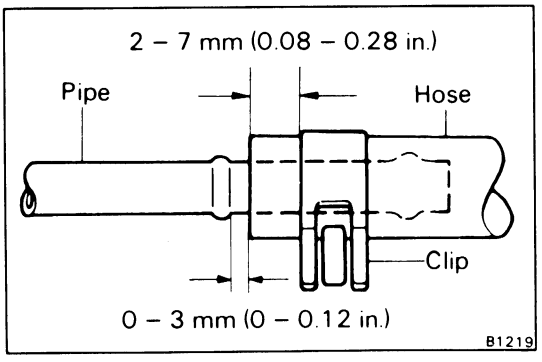

AIR INDUCTION SYSTEM

Air Flow Meter

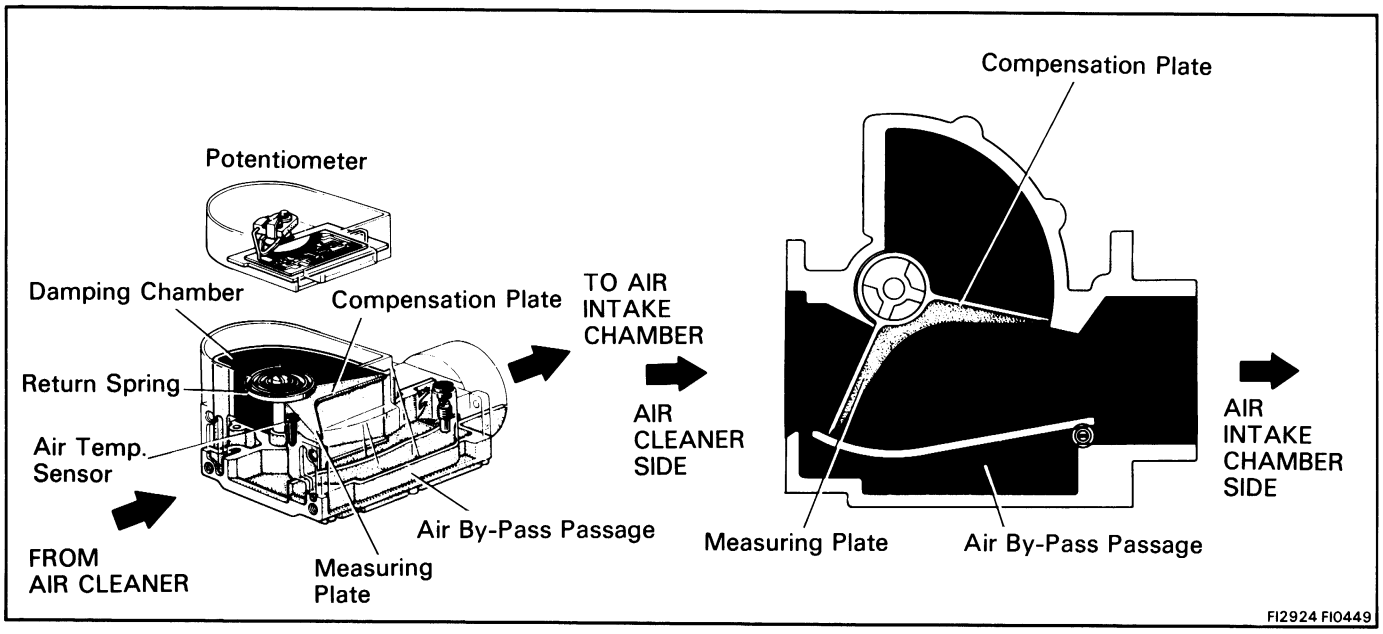

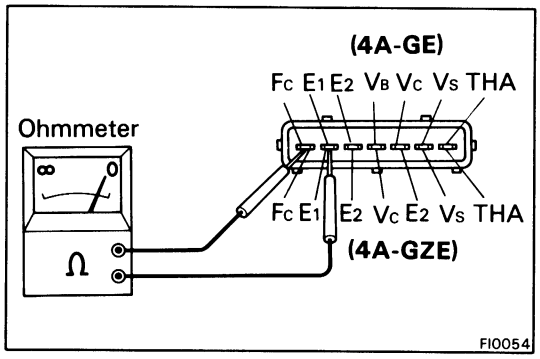

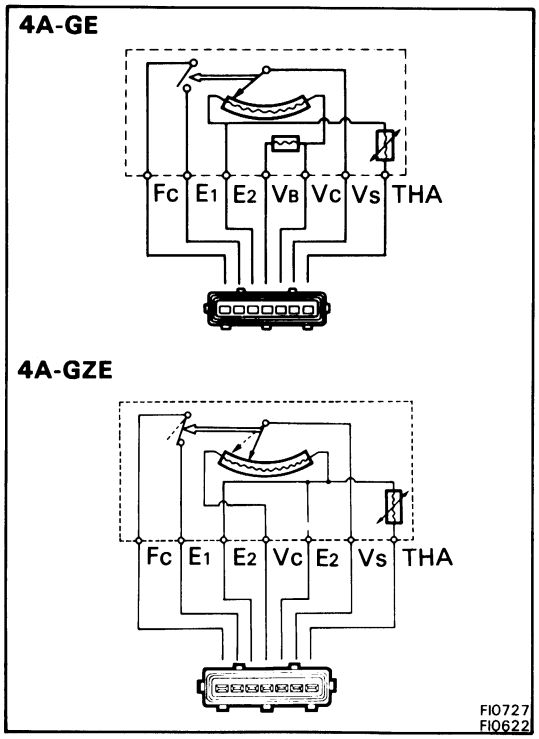

ON-VEHICLE INSPECTION

MEASURE RESISTANCE OF AIR FLOW METER

(a) Disconnect the wiring connector from the air flow meter.

(b) Using an ohmmeter, measure the resistance between each terminal.

Terminals	Resistance		Temperature
	4A-GE	4A-GZE	
E_2 – Vs	20 – 3,000 Ω	20 – 1,200 Ω	–
E_2 – Vc	100 – 300 Ω	200 – 400 Ω	–
E_2 – V_B	200 – 400 Ω	–	–
E_2 – THA	10 – 20 kΩ 4 – 7 kΩ 2 – 3 kΩ 0.9 – 1.3 kΩ 0.4 – 0.7 kΩ		−20°C (−4°F) 0°C (32°F) 20°C (68°F) 40°C (104°F) 60°C (140°F)
E_1 – Fc	Infinity		–

If not within specification, replace the air flow meter.

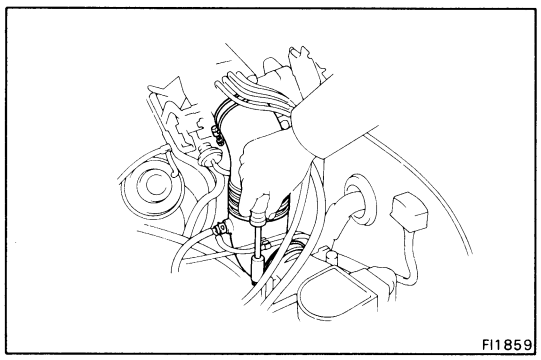

REMOVAL OF AIR FLOW METER

1. **REMOVE RESONATOR (4A-GE) OR INTERCOOLER (4A-GZE)**
2. **DISCONNECT AIR FLOW METER CONNECTOR**
3. **DISCONNECT AIR CLEANER HOSES FROM AIR FLOW METER**

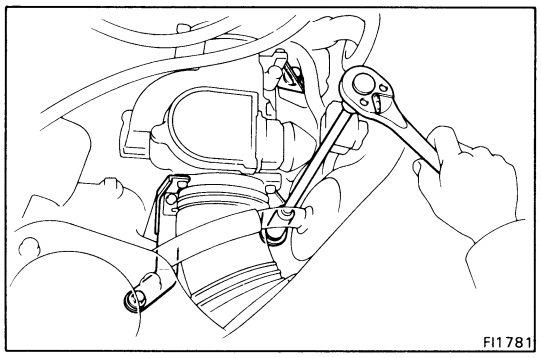

4. **REMOVE AIR FLOW METER**

   Remove the three bolts and air flow meter.

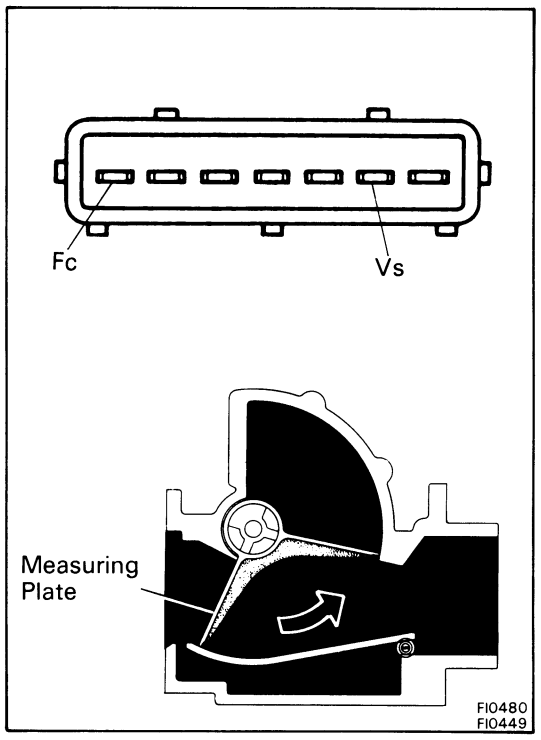

INSPECTION OF AIR FLOW METER

MEASURE RESISTANCE OF AIR FLOW METER

Using an ohmmeter, measure the resistance between each terminal by moving the measuring plate.

Terminals	Resistance Ω		Measuring plate opening
	4A-GE	4A-GZE	
E_1 – Fc	Infinity		Fully closed
	Zero		Other than closed
E_2 – Vs	20 – 400	200 – 600	Fully closed
	20 – 3,000	20 – 1,200	Fully open

NOTE: Resistance between terminals E_2 and Vs will change in a wave pattern as the measuring plate slowly opens.

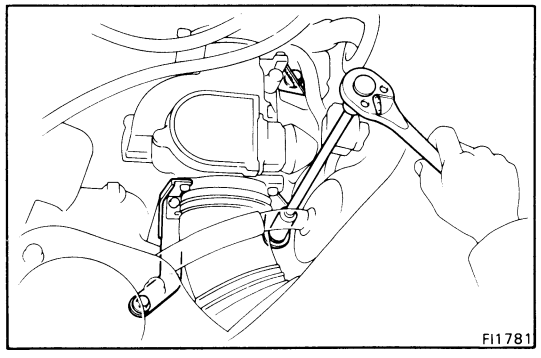

INSTALLATION OF AIR FLOW METER

1. **INSTALL AIR FLOW METER**
2. **CONNECT AIR CLEANER HOSES TO AIR FLOW METER**
3. **CONNECT AIR FLOW METER CONNECTOR**
4. **INSTALL RESONATOR (4A-GE) OR INTERCOOLER (4A-GZE)**

Component

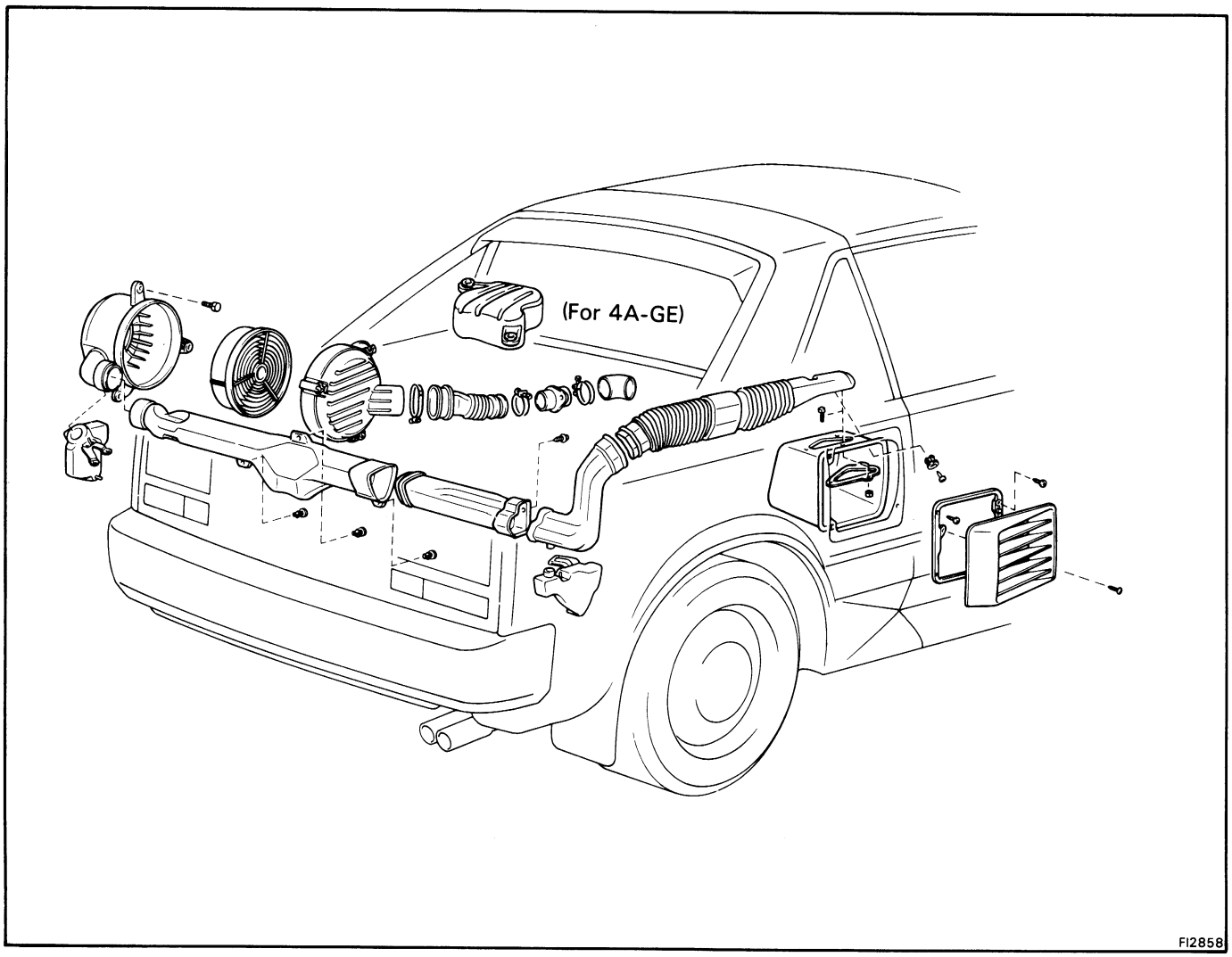

Throttle Body

4A-GE

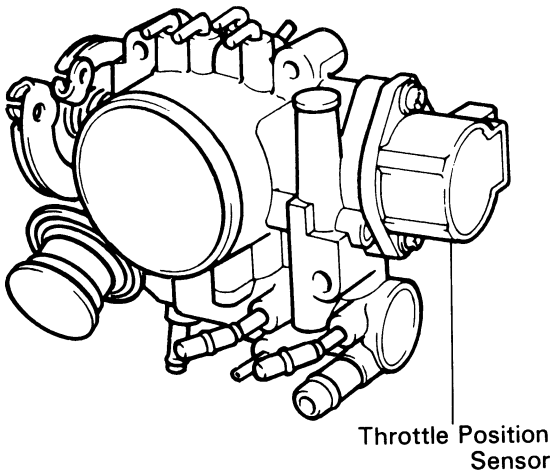

4A-GZE

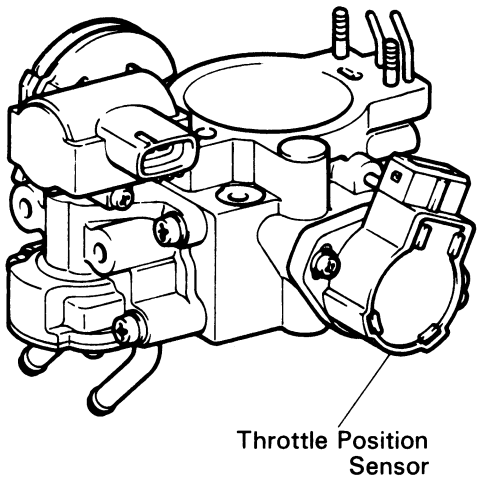

Throttle Position Sensor

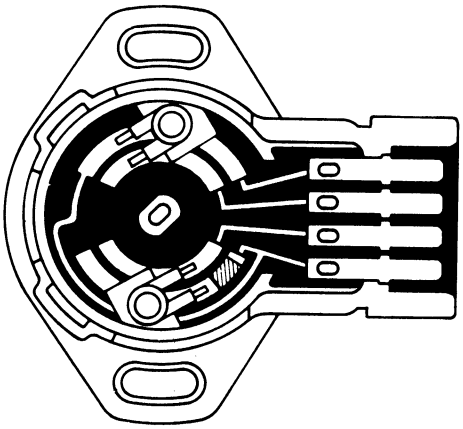

FI2497 FI2991
FI2973

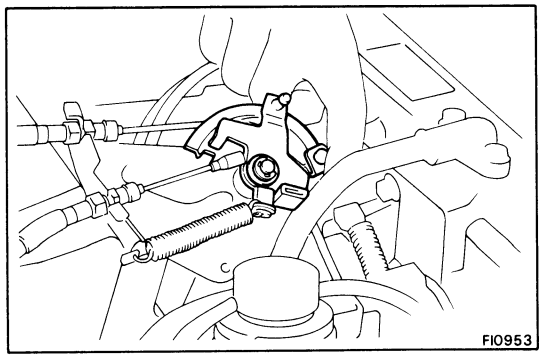

ON-VEHICLE CHECK

1. CHECK THROTTLE BODY

(a) Check that the throttle linkage moves smoothly.

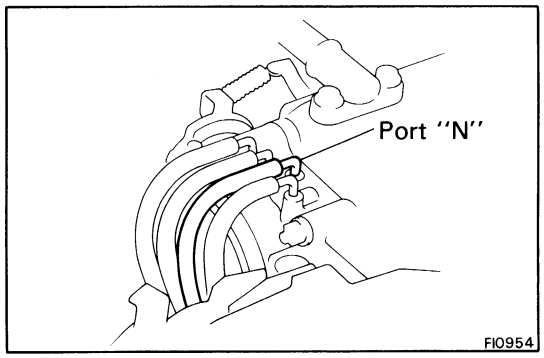

(b) Check the vacuum at port "N."
- Start the engine.
- Check the vacuum with your finger.

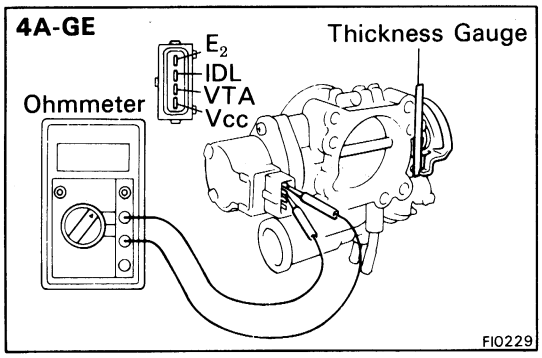

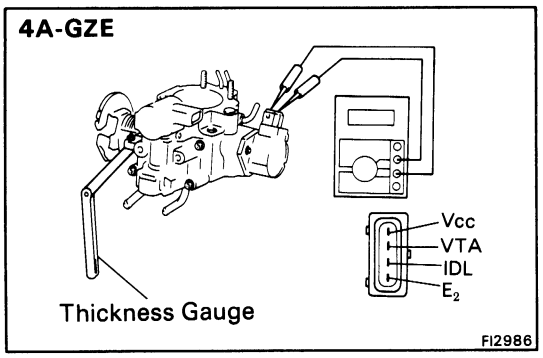

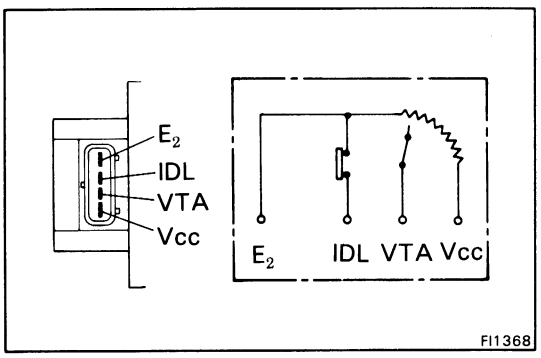

2. CHECK THROTTLE POSITION SENSOR

Check the resistance between the terminals.
- Unplug the connector from the sensor.
- Insert a thickness gauge between the throttle stop screw and stop lever.
- Using an ohmmeter, check the resistance between each terminal.

4A-GE

Clearance between Lever and stop screw	Between terminals	Resistance
0 mm (0 in.)	VTA – E_2	0.2 – 0.8 kΩ
0.35 mm (0.0138 in.)	IDL – E_2	2.3 kΩ or less
0.59 mm (0.0232 in.)	IDL – E_2	Infinity
Throttle valve fully opened position	VTA – E_2	3.3 – 10 kΩ
—	Vcc – E_2	3 – 7 kΩ

4A-GZE

Clearance between Lever and stop screw	Between terminals	Resistance
0 mm (0 in.)	VTA – E_2	0.2 – 0.8 kΩ
0.40 mm (0.0157 in.)	IDL – E_2	2.3 kΩ or less
0.65 mm (0.0256 in.)	IDL – E_2	Infinity
Throttle valve fully opened position	VTA – E_2	3.3 – 10 kΩ
—	Vcc – E_2	3 – 7 kΩ

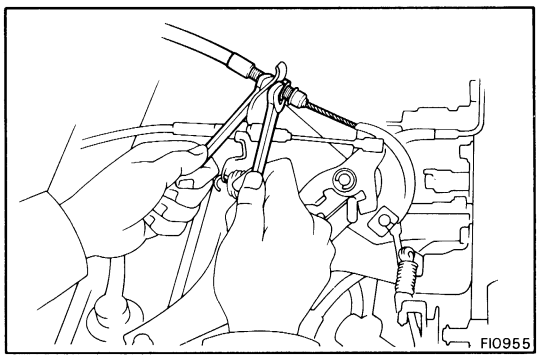

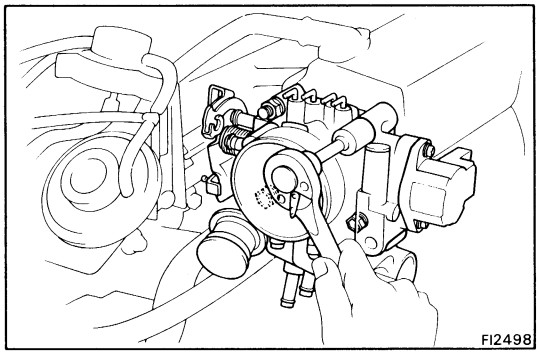

REMOVAL OF THROTTLE BODY (4A-GE)

1. **DRAIN COOLANT FROM THROTTLE BODY**
2. **REMOVE AIR CLEANER HOSE NO. 1**
3. **DISCONNECT THROTTLE POSITION SENSOR CONNECTOR**
4. **DISCONNECT WATER AND VACUUM HOSES**
5. **REMOVE ACCELERATOR RETURN SPRING**
6. **DISCONNECT ACCELERATOR CABLE**
7. **REMOVE THROTTLE BODY**

   Remove the two bolts, two nuts and the throttle body with the gasket.

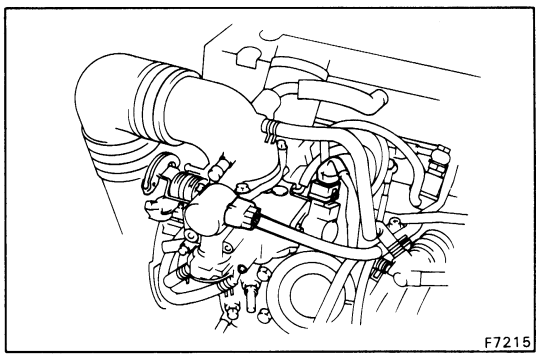

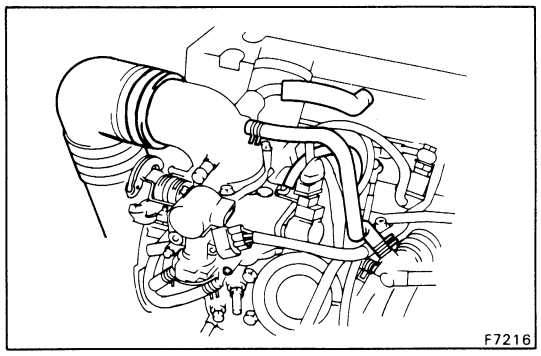

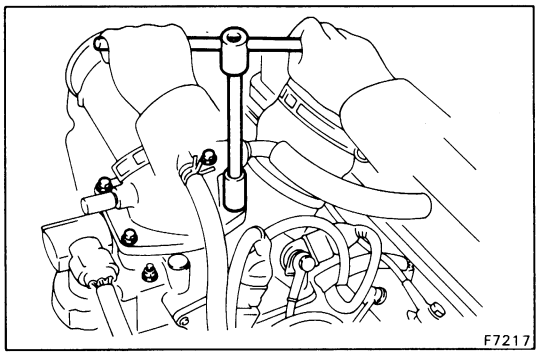

(4A-GZE)

1. **DRAIN COOLANT FROM THROTTLE BODY**
2. **DISCONNECT FOLLOWING CONNECTORS:**
   (a) Throttle position sensor connector
   (b) ISC valve connector
3. **DISCONNECT FOLLOWING HOSES:**
   (a) Air cleaner hose
   (b) Charcoal canister hose
   (c) ABV vacuum hose
   (d) PCV hose
   (e) EGR vacuum hose
4. **DISCONNECT THROTTLE CABLE**
5. **DISCONNECT THROTTLE CABLE (A/T)**
6. **REMOVE INTAKE AIR CONNECTOR**

   Remove the two bolts, nuts, air connector and gasket.
7. **DISCONNECT TWO WATER BY-PASS HOSES**

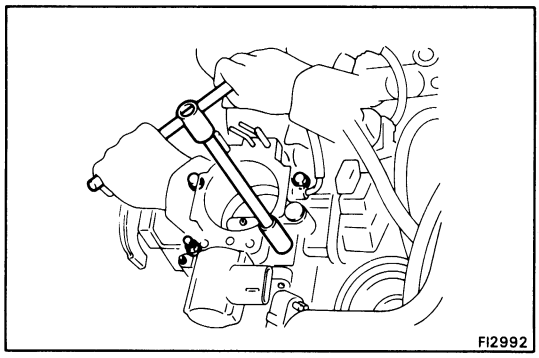

8. REMOVE THROTTLE BODY

Remove the two bolts, two nuts and the throttle body with the gasket.

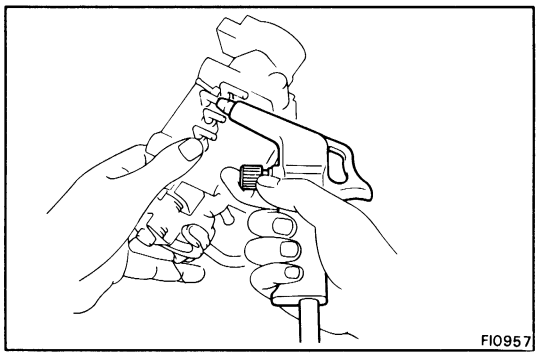

INSPECTION OF THROTTLE BODY

1. CLEAN THROTTLE BODY BEFORE INSPECTION

(a) Wash and clean the cast parts with a soft brush and carburetor cleaner.

(b) Using compressed air, blow all passages and apertures in the throttle body.

CAUTION: To prevent deterioration, do not clean the throttle position sensor and dash pot.

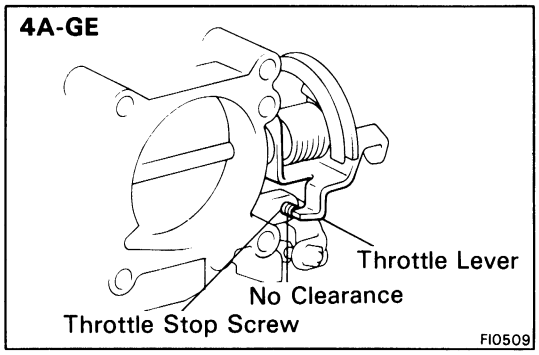

2. CHECK THROTTLE VALVE

Check that there is no clearance between the throttle stop screw and throttle lever when the throttle valve is fully closed.

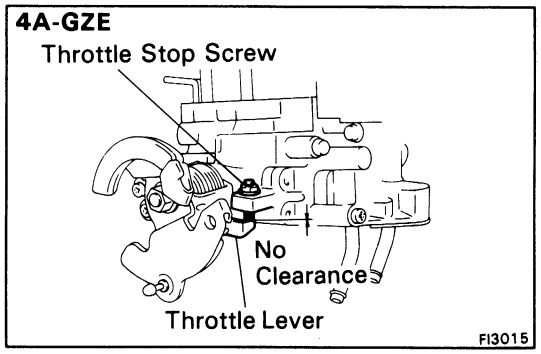

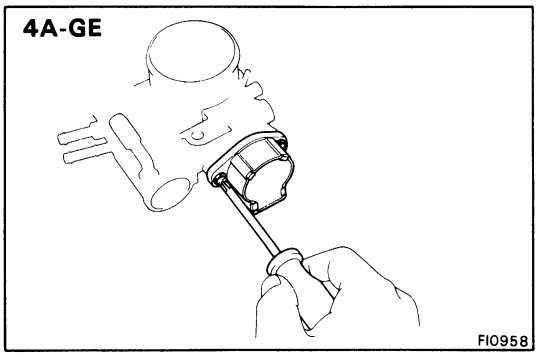

3. CHECK THROTTLE POSITION SENSOR
(See step 2 on page FI-98)

4. IF NECESSARY, ADJUST THROTTLE POSITION SENSOR

(a) Loosen the two screws of the sensor.

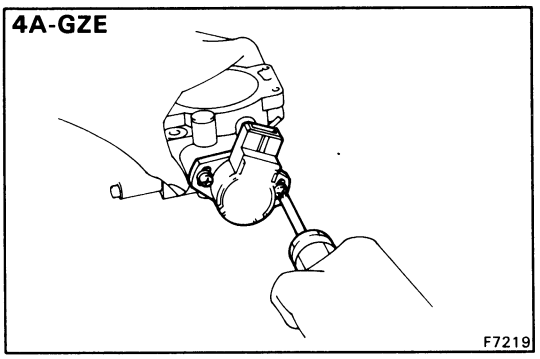

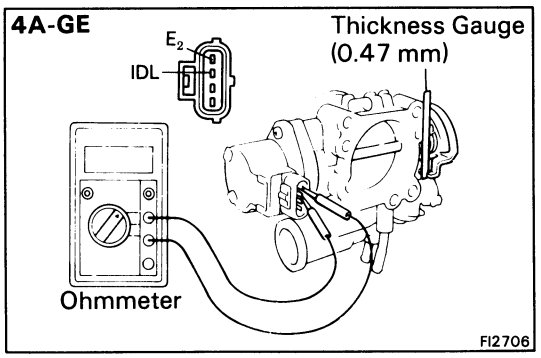

(b) (4A-GE)
Insert a thickness gauge (0.47 mm or 0.0185 in.) between the throttle stop screw and lever, and connect the ohmmeter to terminals IDL and E_2.
Gradually turn the sensor clockwise until the ohmmeter deflects, and secure the sensor with two screws.

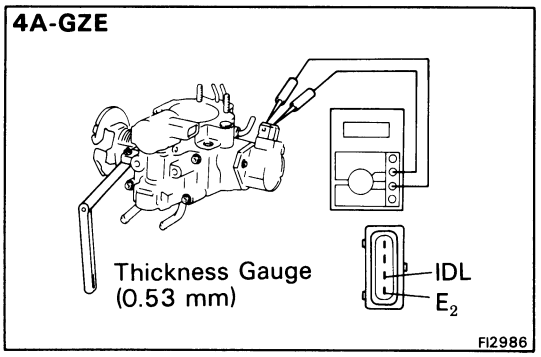

(b) (4A-GZE)
Insert a thickness gauge (0.53 mm or 0.0209 in.) between the throttle stop screw and lever, and connect the ohmmeter to terminals IDL and E_2.
Gradually turn the sensor clockwise until the ohmmeter deflects, and secure the sensor with two screws.

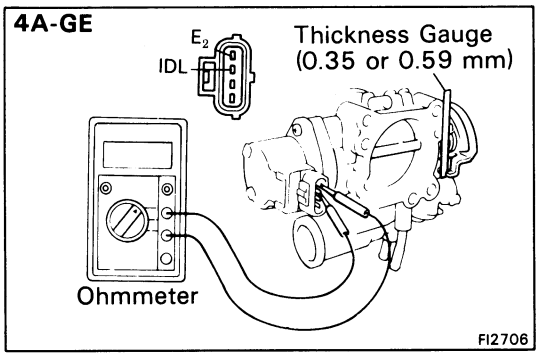

(c) Using a thickness gauge, recheck the continuity between terminals IDL and E_2.

(4A-GE)

Clearance between lever and stop screw	Continuity (IDL – E_2)
0.35 mm (0.0138 in.)	Continuity
0.59 mm (0.0232 in.)	No continuity

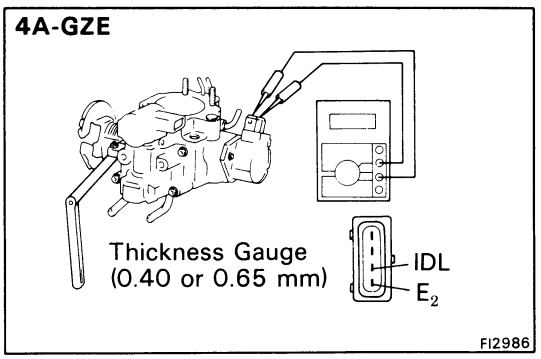

(4A-GZE)

Clearance between lever and stop screw	Continuity (IDL – E_2)
0.40 mm (0.0157 in.)	Continuity
0.65 mm (0.0256 in.)	No continuity

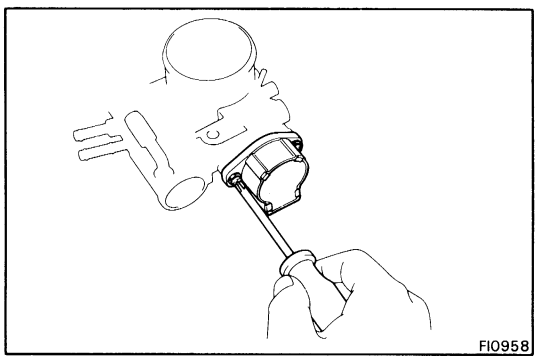

DISASSEMBLY OF THROTTLE BODY (4A-GE)

1. REMOVE THROTTLE POSITION SENSOR

Remove the two screws and sensor.

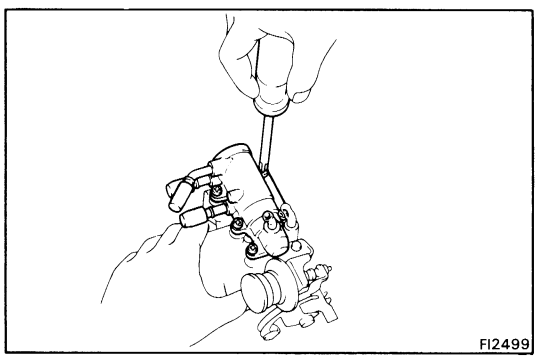

2. REMOVE AIR VALVE

Remove the five screws, air valve, gasket and O-ring.

3. REMOVE DASH POT

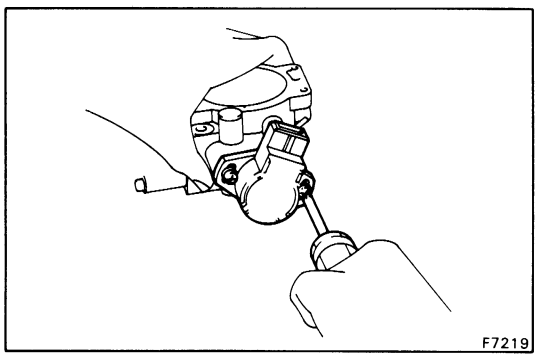

(4A-GZE)

1. REMOVE THROTTLE POSITION SENSOR

Remove the two screws and sensor.

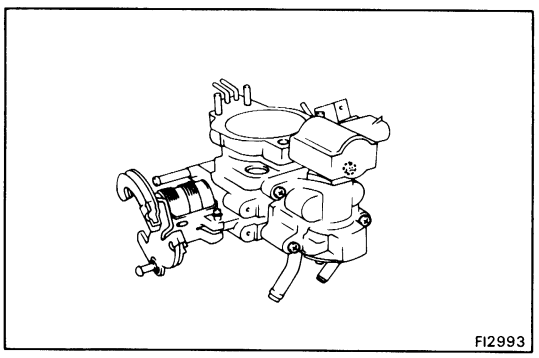

2. REMOVE ISC VALVE

Remove the four screws and ISC valve with the gasket.

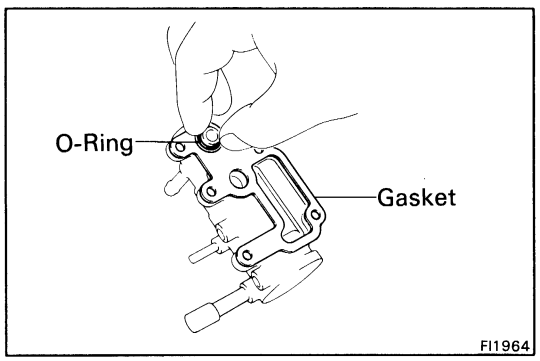

ASSEMBLY OF THROTTLE BODY (4A-GE)

1. INSTALL DASH POT

2. INSTALL AIR VALVE

(a) Place the gasket and O-ring on the throttle body.

(b) Install the air valve with five screws.

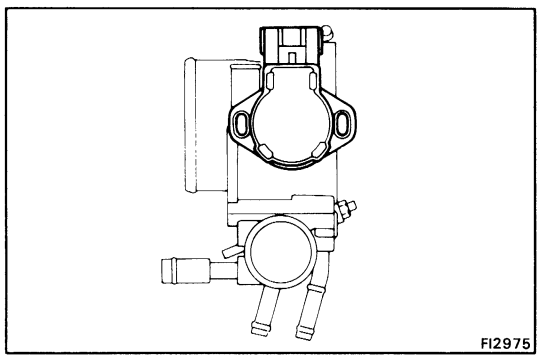

3. INSTALL THROTTLE POSITION SENSOR

(a) Check that the throttle valve is fully closed.

(b) Place the sensor on the throttle body as shown in the figure.

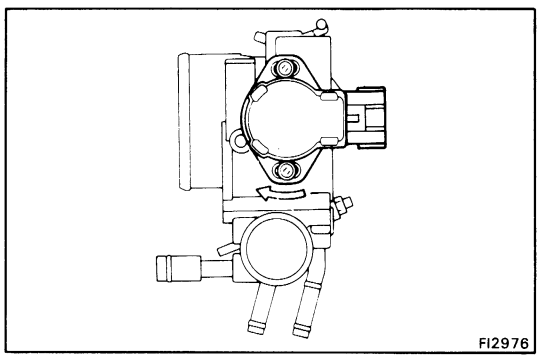

(c) Turn the sensor clockwise, and temporarily install the two screws.

4. ADJUST THROTTLE POSITION SENSOR
(See step 4 on page FI-100)

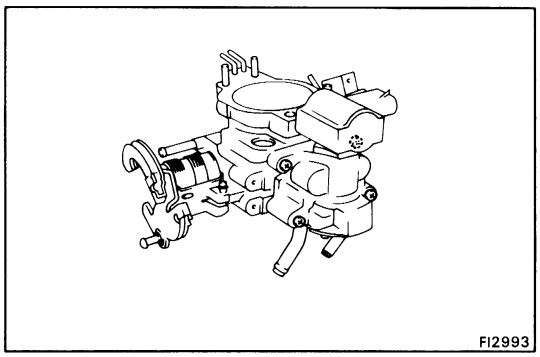

(4A-GZE)

1. INSTALL ISC VALVE

Install a new gasket, ISC valve and four screws.

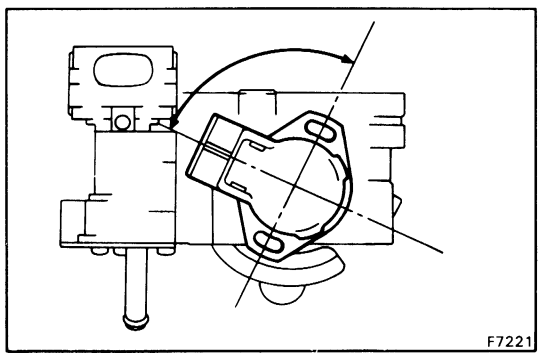

2. INSTALL THROTTLE POSITION SENSOR

(a) Check that the throttle valve is fully closed.

(b) Place the sensor on the throttle body as shown in the figure.

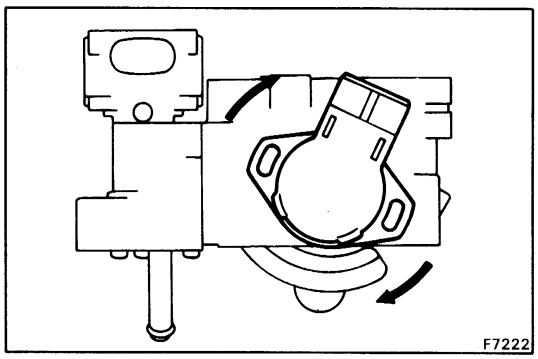

(c) Turn the sensor clockwise, and temporarily install the two screws.

3. **ADJUST THROTTLE POSITION SENSOR**
(See step 4 on page FI-100)

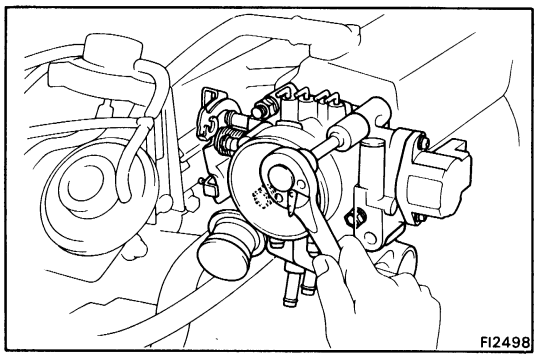

INSTALLATION OF THROTTLE BODY (4A-GE)

1. **INSTALL THROTTLE BODY**
   Place on a new gasket and install the throttle body with two bolts and two nuts.
   Torque: 220 kg-cm (16 ft-lb, 22 N·m)
2. **CONNECT ACCELERATOR CABLE**
3. **INSTALL ACCELERATOR RETURN SPRING**
4. **CONNECT WATER AND VACUUM HOSES**
5. **CONNECT THROTTLE POSITION SENSOR CONNECTOR**
6. **INSTALL AIR CLEANER HOSE NO. 1**
7. **REFILL WITH COOLANT**

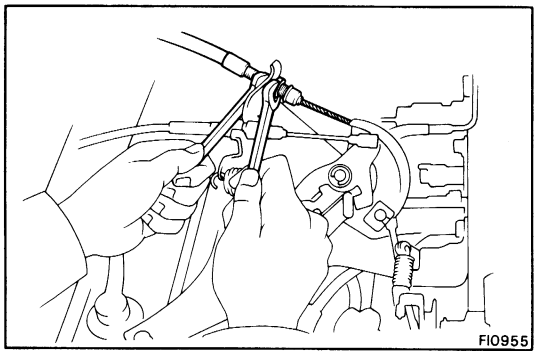

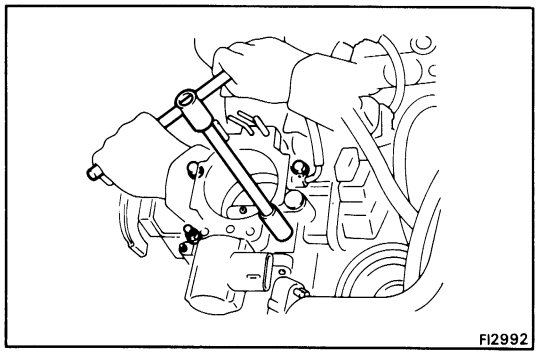

(4A-GZE)

1. **INSTALL THROTTLE BODY**
   Place on a new gasket and install the throttle body with two bolts and two nuts.
   Torque: 220 kg-cm (16 ft-lb, 22 N·m)
2. **CONNECT TWO WATER BY-PASS HOSES**

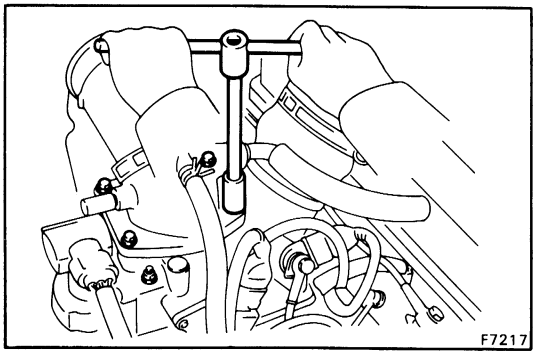

3. **INSTALL INTAKE AIR CONNECTOR**
   Place on a new gasket and install the throttle body with two bolts and two nuts.
   Torque: 100 kg-cm (7 ft-lb, 10 N·m)
4. **CONNECT THROTTLE CABLE (A/T)**
5. **CONNECT ACCELERATOR CABLE**

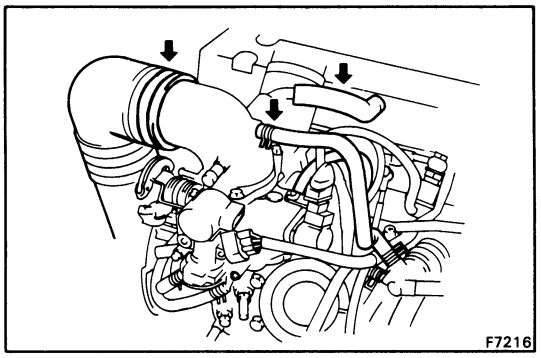

6. CONNECT FOLLOWING HOSES:

(a) PCV hose

(b) ABV vacuum hose

(c) Charcoal canister hose

(d) Air cleaner hose

(e) EGR vacuum hose

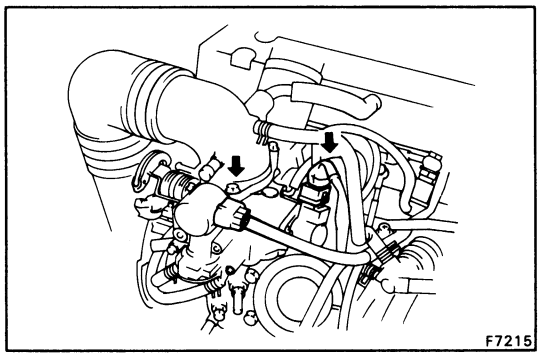

7. CONNECT FOLLOWING CONNECTORS:

(a) ISC valve connector

(b) Throttle position sensor connector

8. REFILL WITH COOLANT

Idle Speed Control (ISC) Valve (4A-GZE)

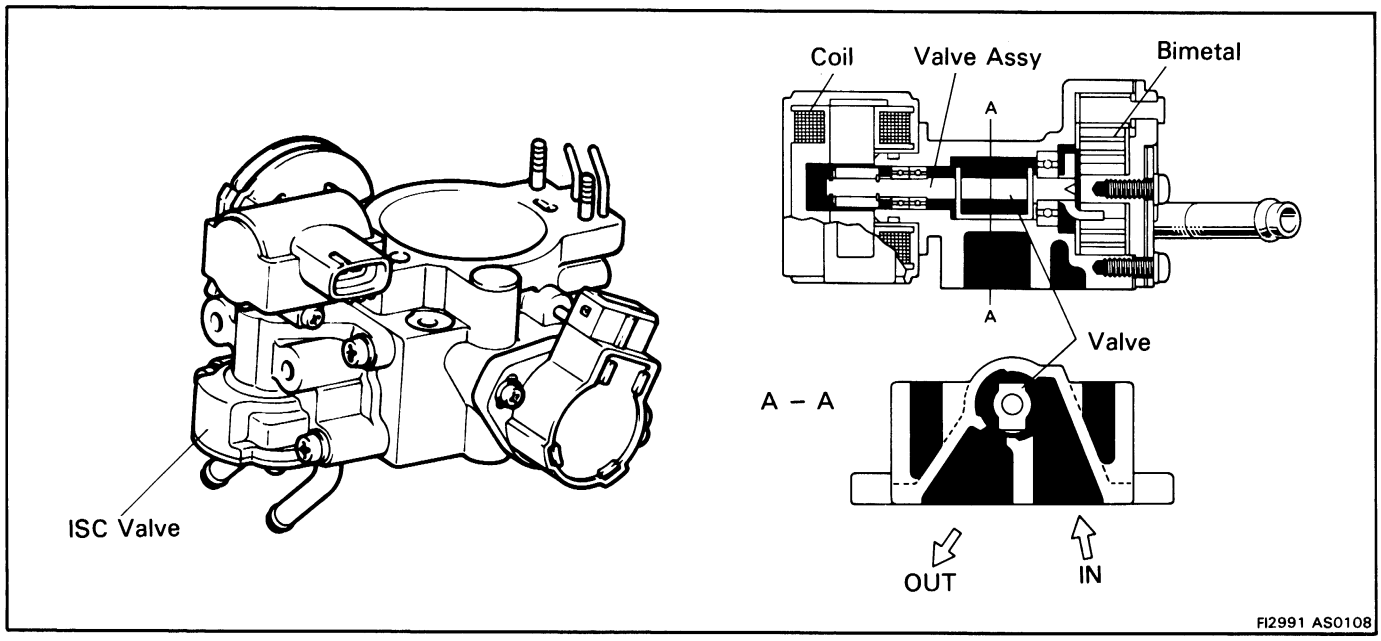

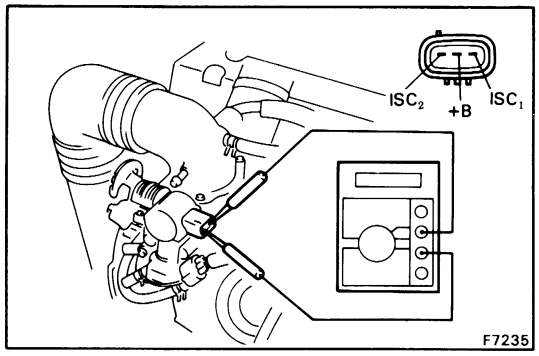

ON-VEHICLE INSPECTION

INSPECT RESISTANCE OF ISC VALVE

(a) Disconnect the ISC valve connector.

(b) Using on ohmmeter, measure the resistance between each terminal.

Resistance:	**ISC_1 – +B**	**16 – 17 Ω**
	ISC_2 – +B	**16 – 17 Ω**

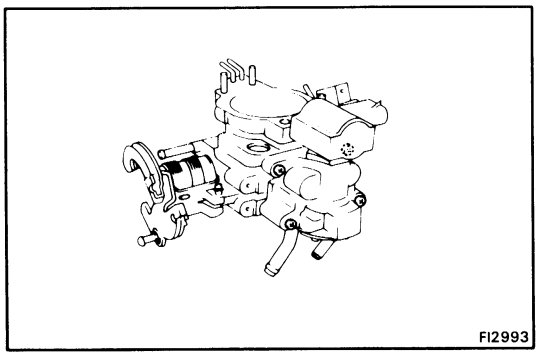

REMOVAL OF ISC VALVE

1. **DRAIN COOLANT FROM THROTTLE BODY**
2. **DISCONNECT ISC VALVE CONNECTOR**
3. **DISCONNECT TWO WATER BY-PASS HOSES**
4. **REMOVE ISC VALVE**
   (See page FI-102)

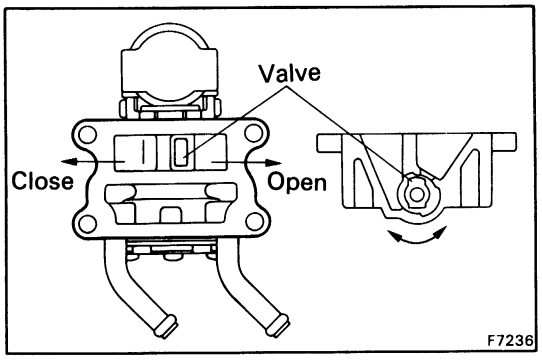

INSPECT OPERATION OF ISC VALVE

(a) Apply battery voltage, connect the positive terminal to +B terminal and the negative terminal to ISC_1, terminal. Check that the valve moves foward the closed position.

(b) Apply terminal voltage, connect the positive terminal to +B terminal and the negative terminal to ISC_2 terminal. Check that the valve moves foward the open position.

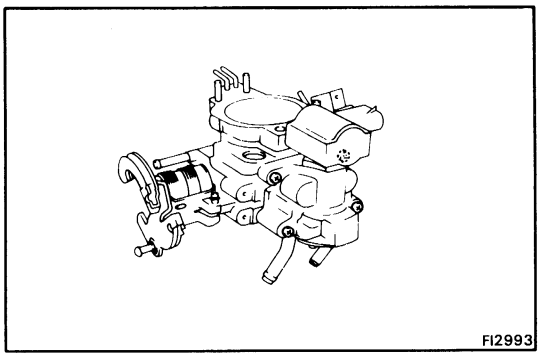

INSTALLATION OF ISC VALVE

1. **INSTALL ISC VALVE**
   (See page FI-103)
2. **CONNECT TWO WATER BY-PASS HOSES**
3. **CONNECT ISC VALVE CONNECTOR**
4. **REFILL WITH COOLANT**

Auxiliary Air Valve (4A-GE)

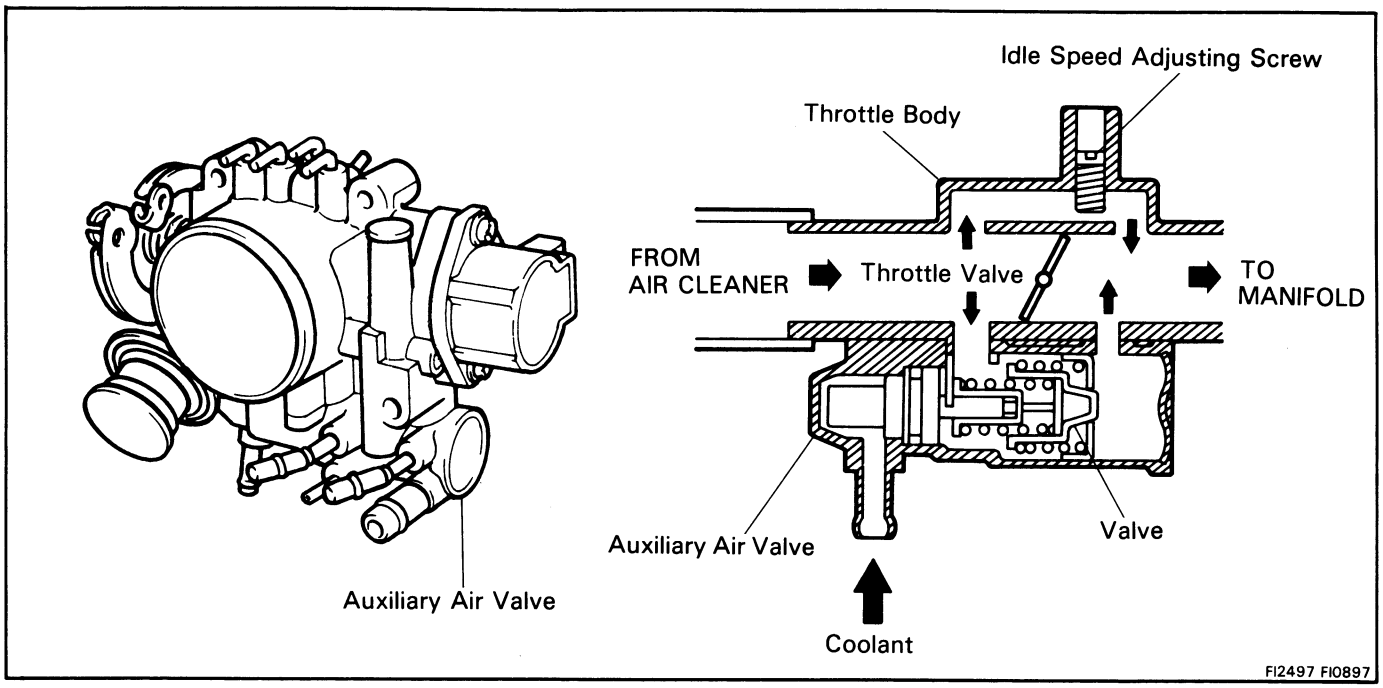

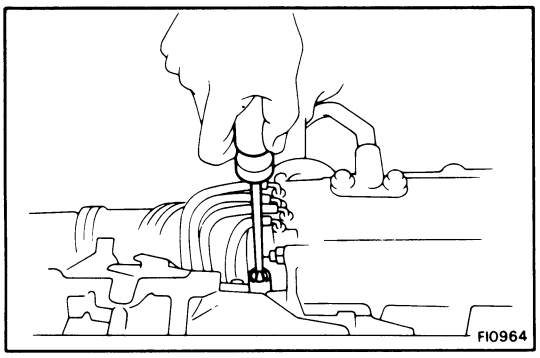

ON-VEHICLE INSPECTION

CHECK OPERATION OF AUXILIARY AIR VALVE

Check the engine rpm by fully screwing in the idle speed adjusting screw.

At low temp. (Coolant temp.: below 80°C or 176°F)

- When the idle speed adjusting screw is in, the engine rpm should drop.

After warm-up

- When the idle speed adjusting screw is in, the engine rpm should drop below 600 rpm or stop.

REMOVAL OF AUXILIARY AIR VALVE

1. **REMOVE THROTTLE BODY (See page FI-99)**
2. **REMOVE AIR VALVE (See step 2 on page FI-102)**

INSTALLATION OF AUXILIARY AIR VALVE

1. **INSTALL AIR VALVE (See step 2 on page FI-103)**
2. **INSTALL THROTTLE BODY (See page FI-104)**

ELECTRONIC CONTROL SYSTEM

Location of Electronic Control Parts

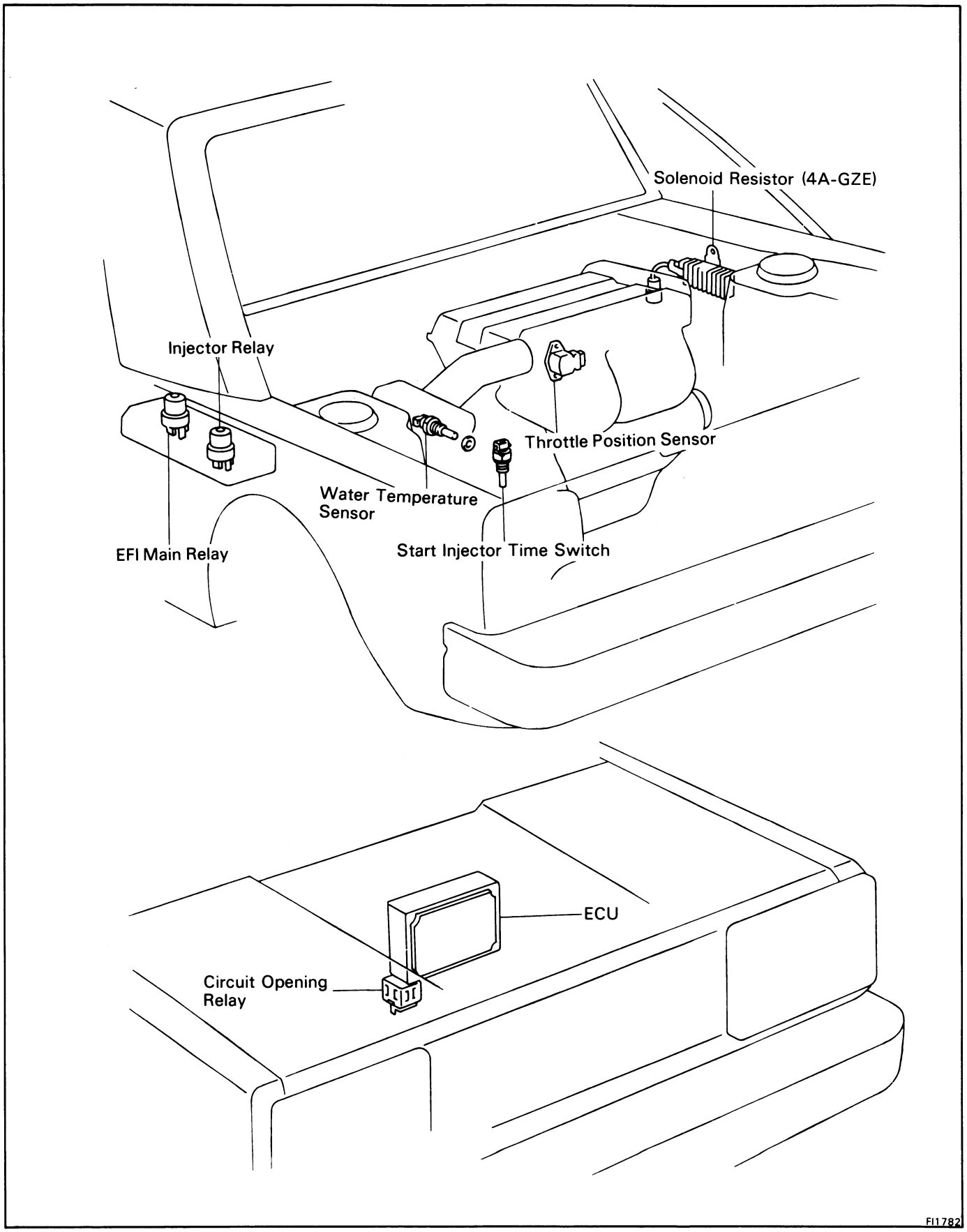

EFI Main Relay

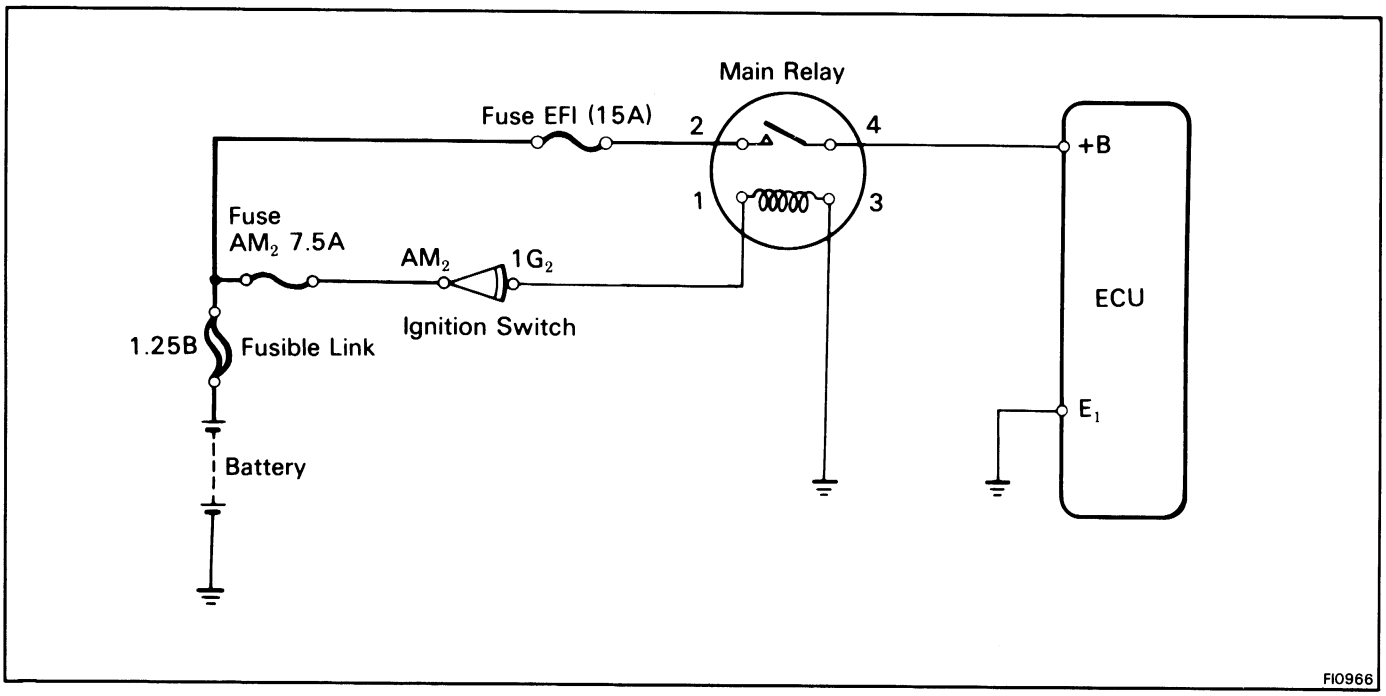

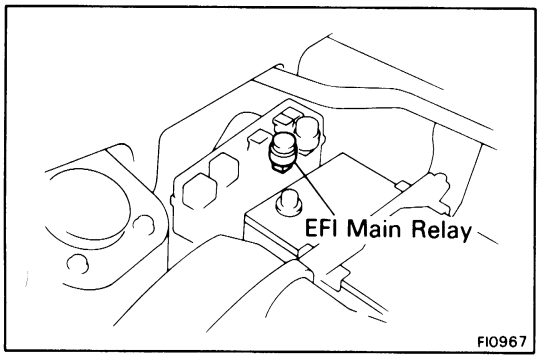

INSPECTION OF EFI MAIN RELAYS

1. CHECK OPERATION OF MAIN RELAYS

Turn the ignition switch ON. At this time an operation noise will occur from the relay.

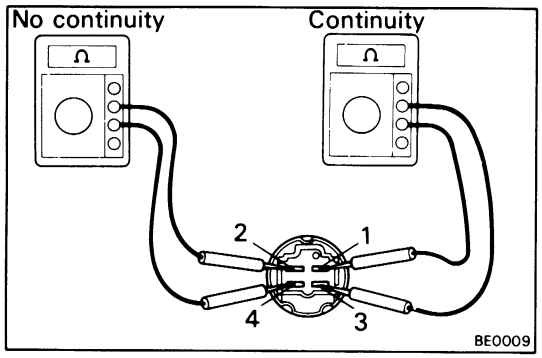

2. INSPECT RELAY CONTINUITY

(a) Check that there is continuity between terminals 1 and 3.

(b) Check that there is no continuity between terminals 2 and 4.

(c) Check that there is no continuity between terminals 3 and 4.

If continuity is not as specified, replace the relay.

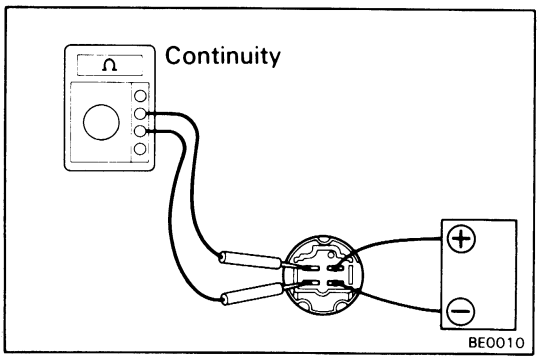

3. INSPECT RELAY OPERATION

(a) Apply battery voltage across terminals 1 and 3.

(b) Check that there is continuity between terminals 2 and 4.

If operation is not as specified, replace the relay.

Circuit Opening Relay

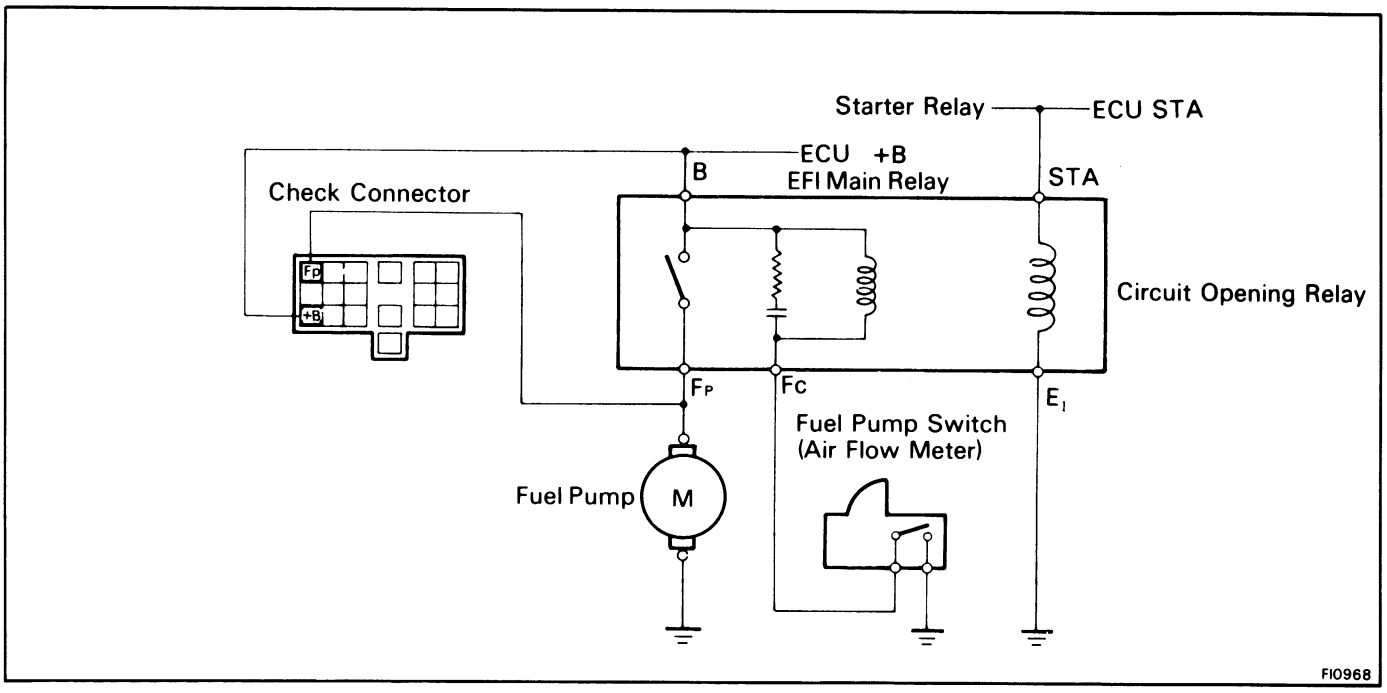

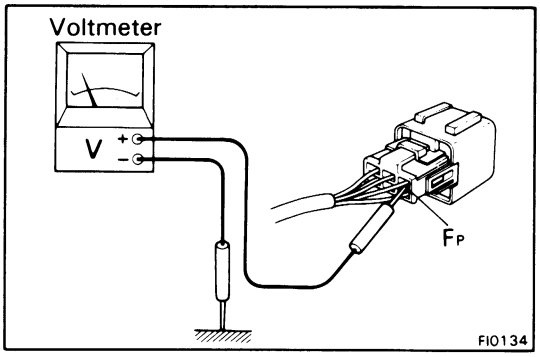

INSPECTION OF CIRCUIT OPENING RELAY

1. CHECK CIRCUIT OPENING RELAY OPERATION

(a) Remove the rear luggage compartment trim.

(b) Remove the circuit opening relay with the wiring.

(c) Using a voltmeter, check that the meter indicates voltage at terminal F_P during engine cranking and running.

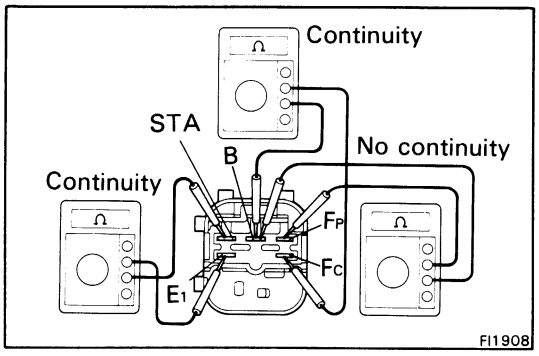

2. INSPECT RELAY CONTINUITY

(a) Using an ohmmeter, check that there is continuity between terminals STA and E_1.

(b) Check that there is continuity between terminals B and F_C.

(c) Check that there is no continuity between terminals B and F_P.

If continuity is not as specified, replace the relay.

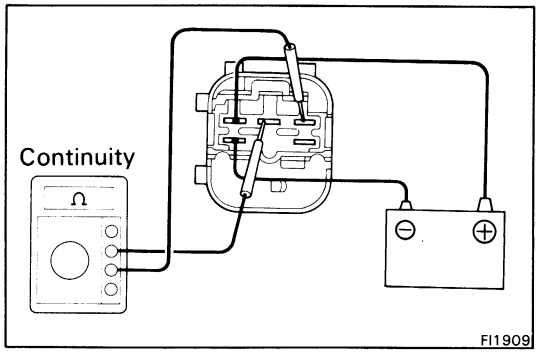

3. INSPECT RELAY OPERATION

(a) Apply battery voltage across terminals STA and E_1.

(b) Using an ohmmeter, check that there is continuity between terminals B and F_P.

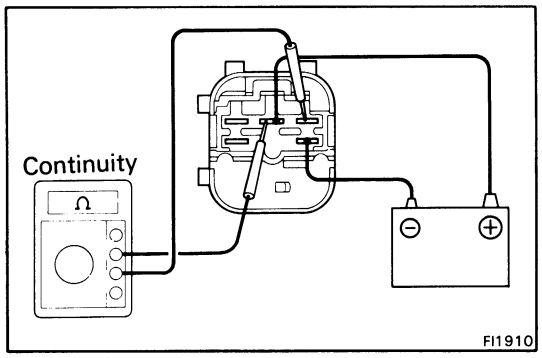

(c) Apply battery voltage across terminals B and F_C.

(d) Check that there is continuity between terminals B and F_P.

If operation is not as specified, replace the relay.

Solenoid Resistor (4A-GZE) and Injector Relay

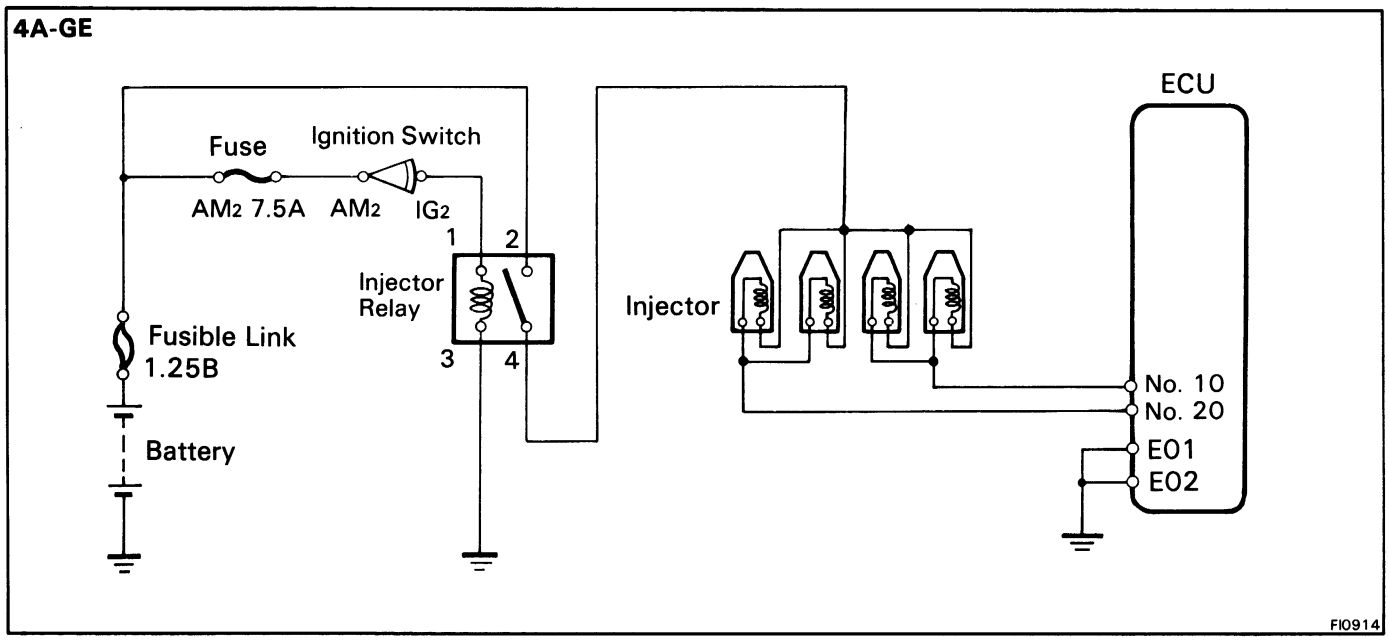

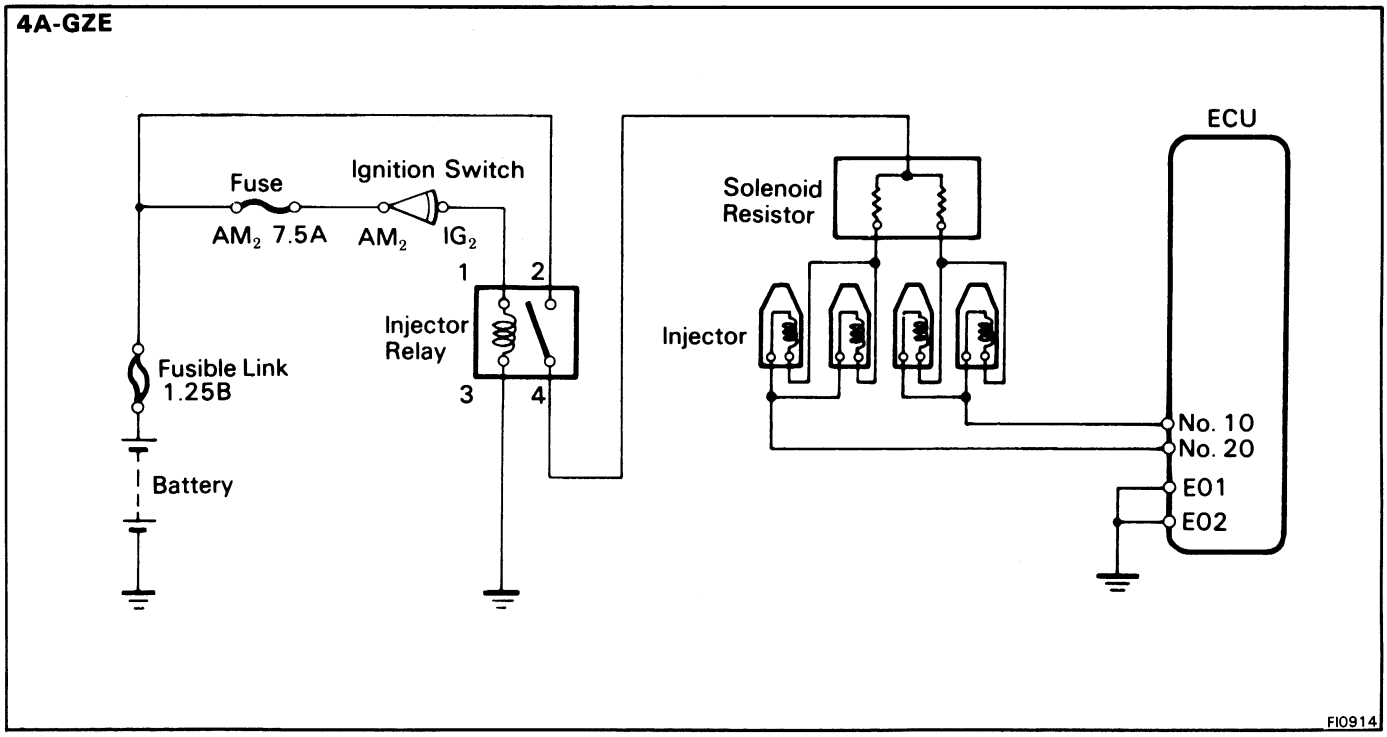

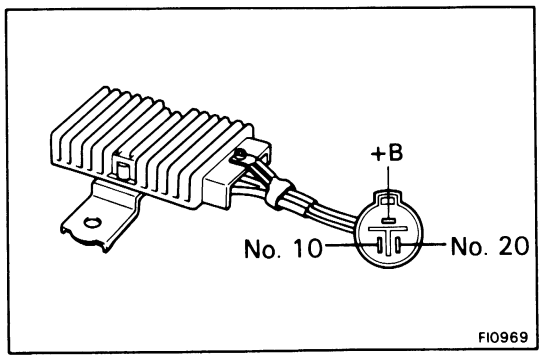

INSPECTION OF SOLENOID RESISTOR (4A-GZE)

MEASURE RESISTANCE OF SOLENOID RESISTOR

Using an ohmmeter, measure the resistance between +B and other terminals.

Resistance: 3 Ω each

INSPECT INJECTOR RELAY

INSPECT INJECTOR RELAY

NOTE: The injector relay is located in the No. 2 junction block.

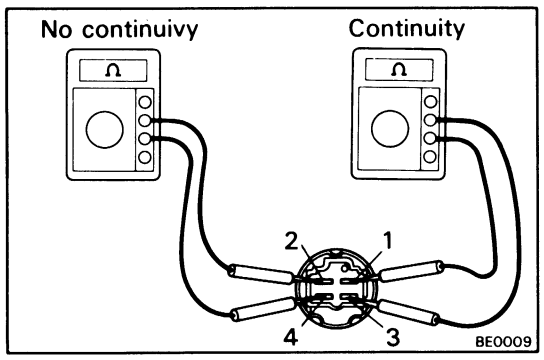

Inspect Relay Continuity

(a) Check that there is continuity between terminals 1 and 3.

(b) Check that there is no continuity between terminals 2 and 4.

(c) Check that there is no continuity between terminals 3 and 4.

If continuity is not as specified, replace the relay.

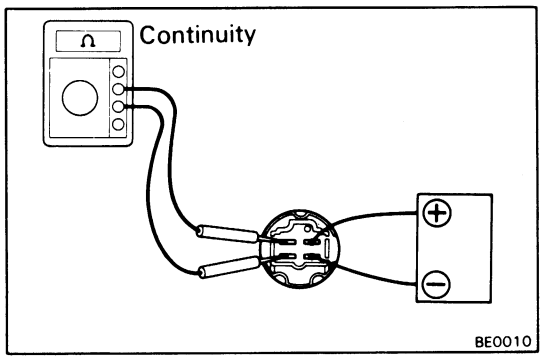

Inspect Relay Operation

(a) Apply battery voltage across terminals 1 and 3.

(b) Check that there is continuity between terminals 2 and 4.

If operation is not as specified, replace the relay.

Start Injector Time Switch

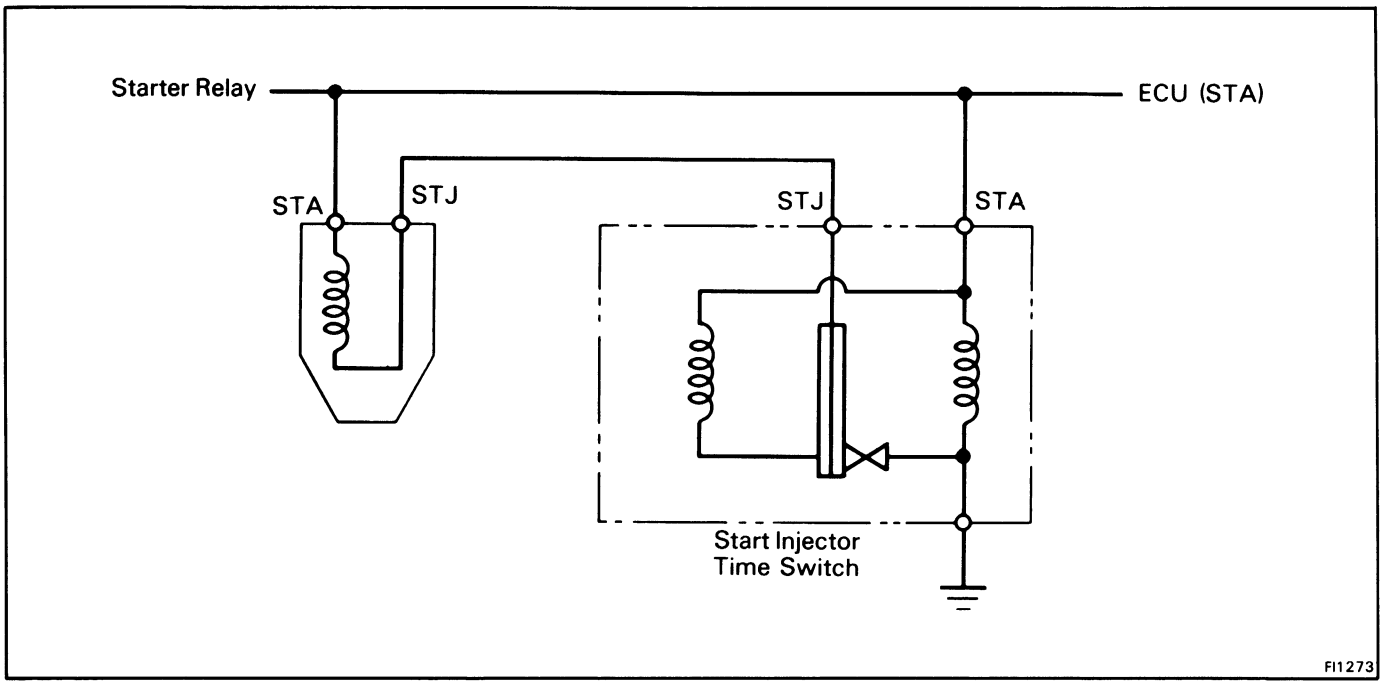

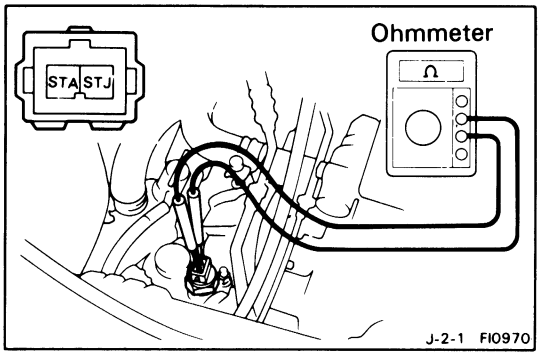

INSPECTION OF START INJECTOR TIME SWITCH

1. MEASURE RESISTANCE OF START INJECTOR TIME SWITCH

(a) Disconnect the connector.

(b) Using an ohmmeter, measure the resistance between each terminal.

Between terminals	Resistance (Ω)	Coolant temp.
STA – STJ	20 – 40 40 – 60	Below 30°C (95°F) Above 40°C (95°F)
STA – Ground	20 – 80	—

Water Temperature Sensor

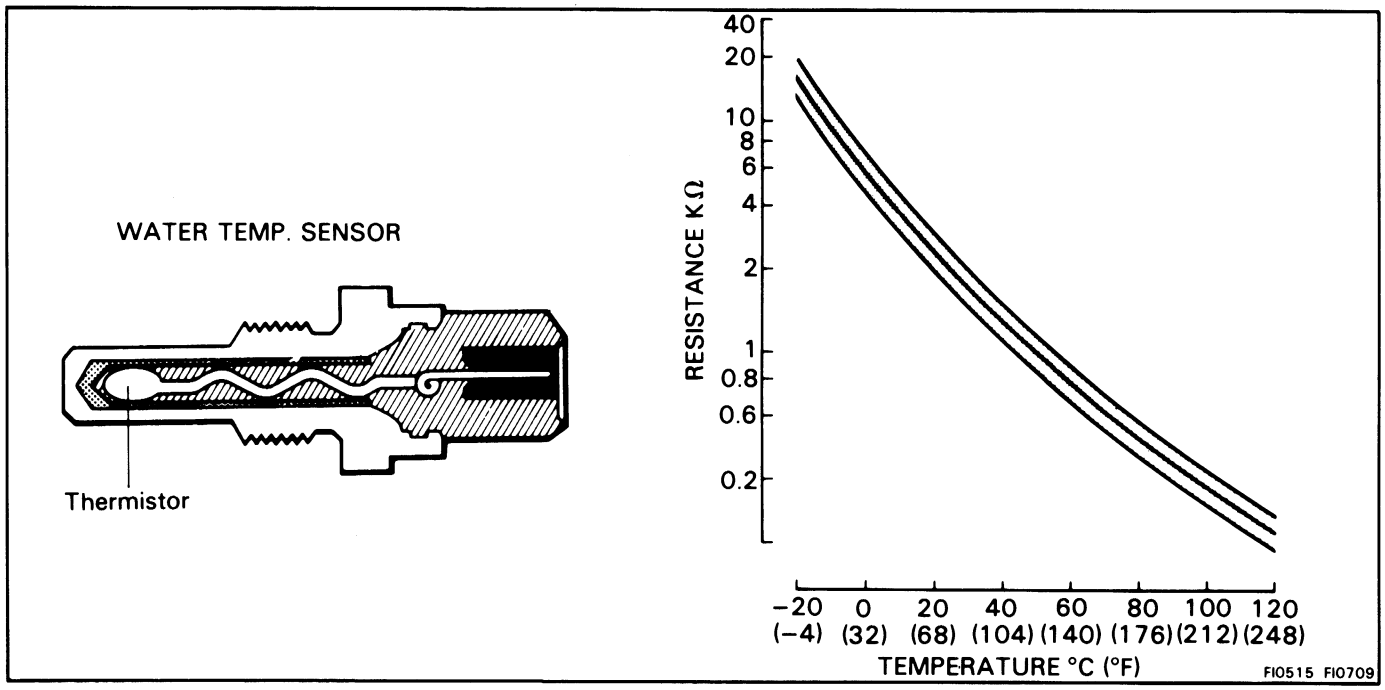

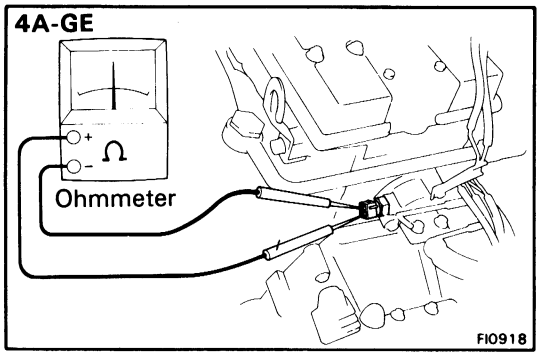

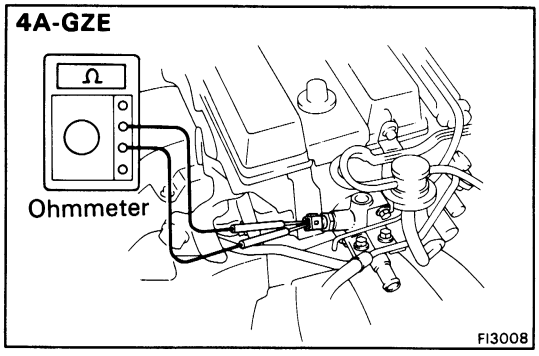

INSPECTION OF WATER TEMPERATURE SENSOR

MEASURE RESISTANCE OF WATER TEMPERATURE SENSOR

(a) Disconnect the connector.

(b) Using an ohmmeter, measure the resistance between both terminals.

Resistance: Refer to chart.

EGR Gas Temperature Sensor (For California)

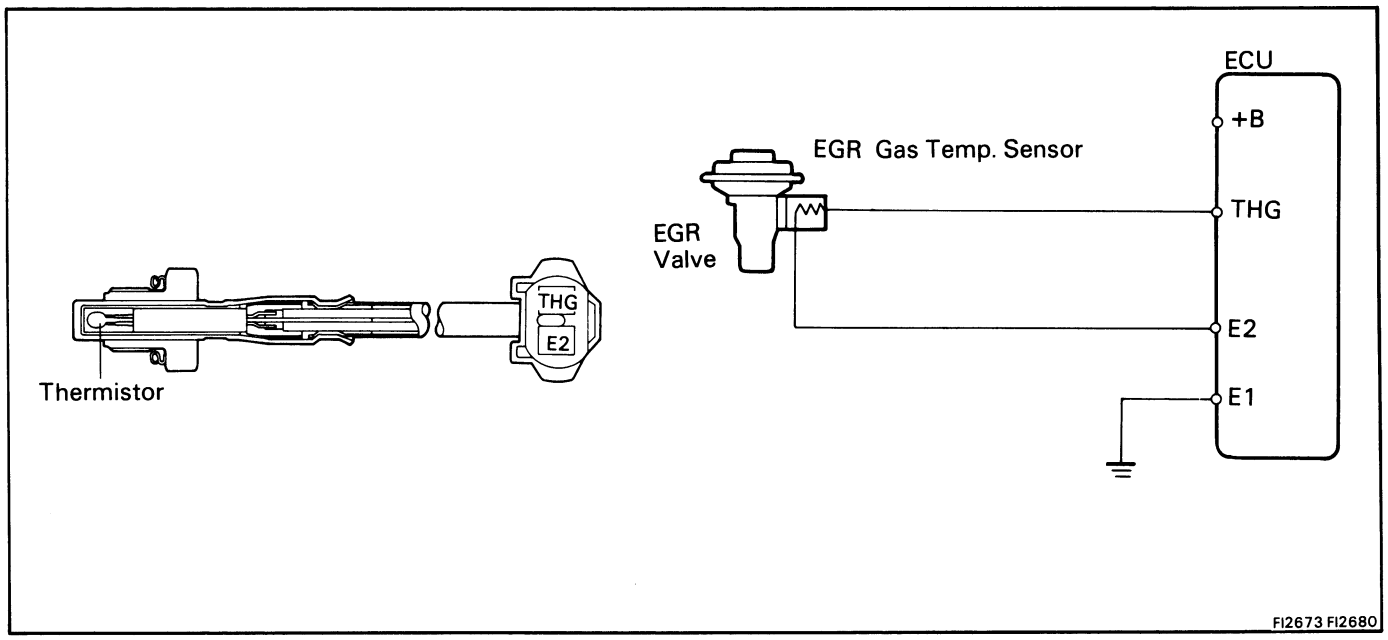

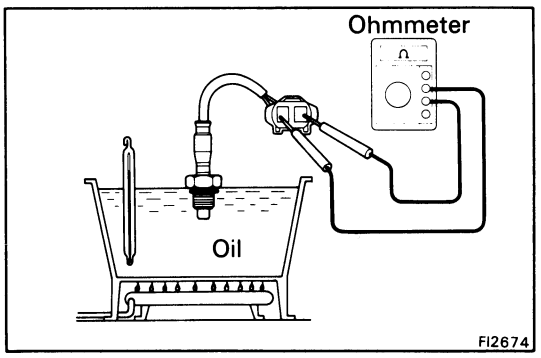

INSPECTION OF EGR GAS TEMPERATURE SENSOR

INSPECT EGR GAS TEMPARATURE SENSOR

Using an ohmmeter, measure the resistance between the terminals.

Resistance:

69.40 – 88.50 kΩ at 50°C (112°F)
11.89 – 14.37 kΩ at 100°C (212°F)
2.79 – 3.59 kΩ at 150°C (302°F)

If the resistance is not as specified, replace the sensor.

High Temperature Line Pressure Up System

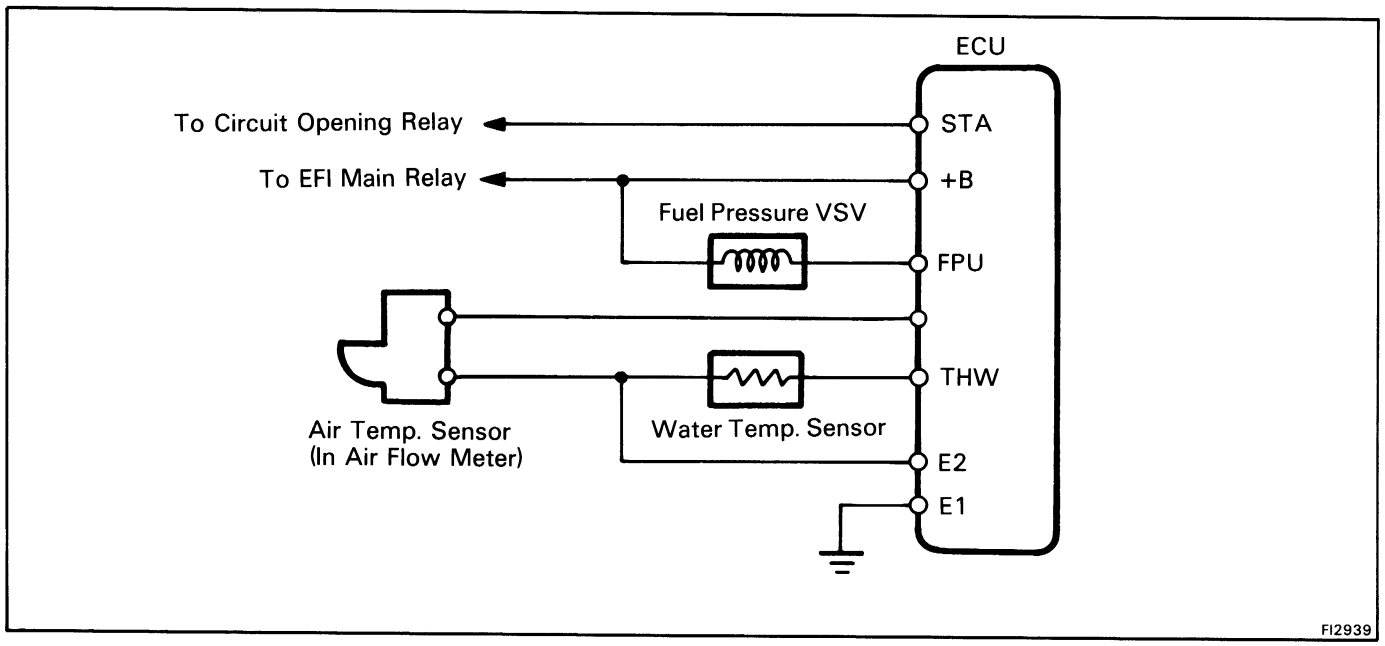

INSPECTION OF HIGH TEMPERATURE LINE PRESSURE UP SYSTEM

1. **INSPECT WATER TEMPERATURE SENSOR**
   (See page FI-116)

2. **INSPECT AIR TEMPERATURE SENSOR**
   (See page FI-94)

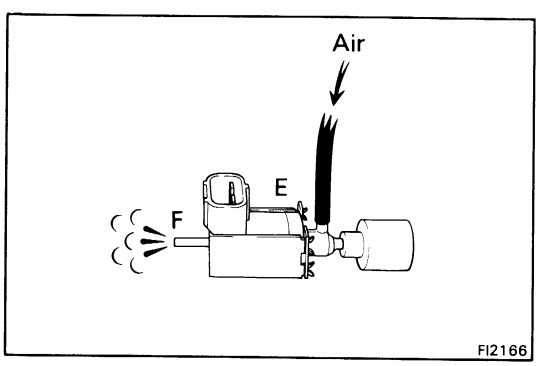

3. **INSPECT FUEL PRESSURE VSV**
   (a) Check that air does not flow pipe E to pipe F.

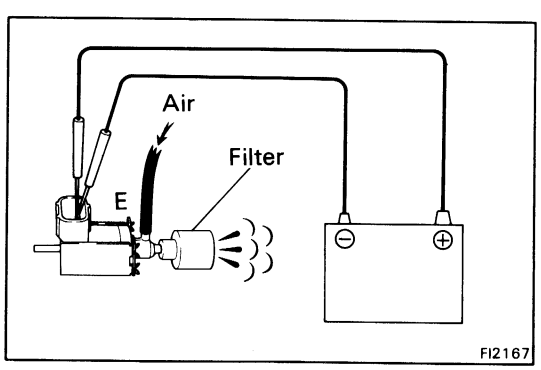

   (b) Apply battery voltage across the terminals.
   (c) Check that air flows from pipe E to pipe F.

   If operation is not as specified, replace the VSV.

Idle-up System

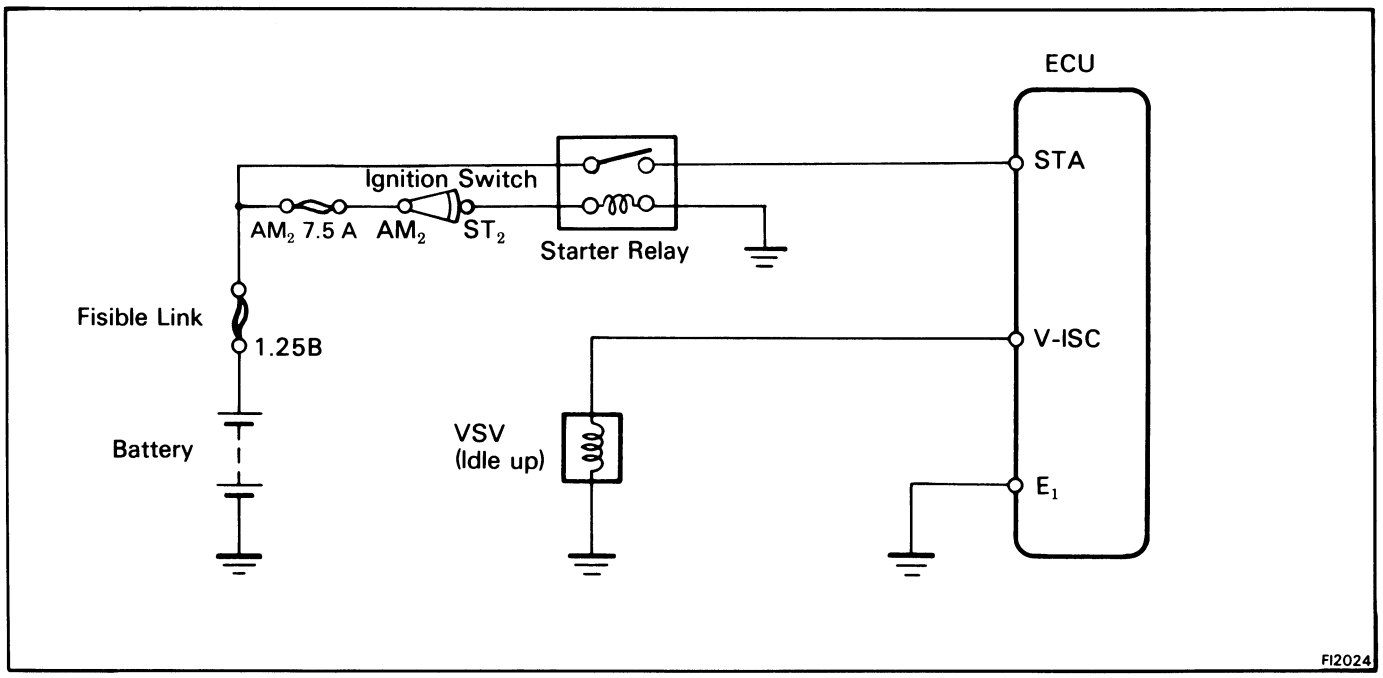

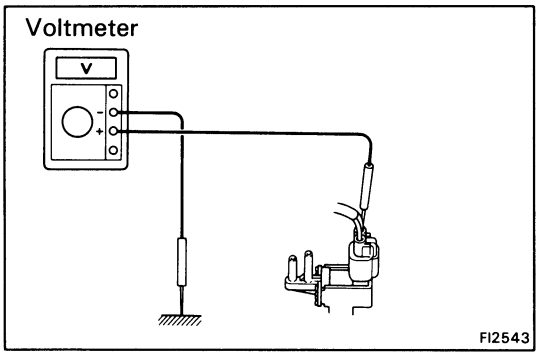

INSPECTION OF VSV (Idle-up)

1. MEASURE BATTERY VOLTAGE OF VSV

(a) All accessories switched "OFF"

(b) Using a voltmeter, check that the meter indicates battery voltage during cranking and for ten seconds after starting.

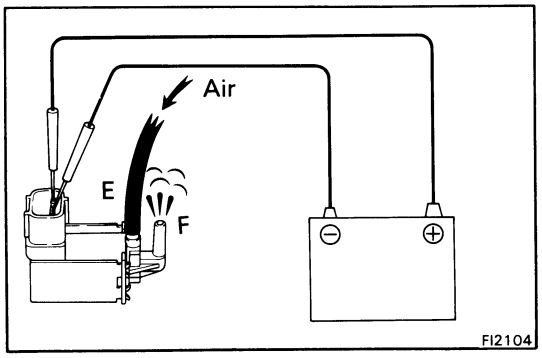

2. INSPECT VSV OPERATION

(a) Remove the VSV.

(b) Connect the VSV terminals to the battery terminals as illustrated.

(c) Blow into pipe E and check that air comes out of pipe F.

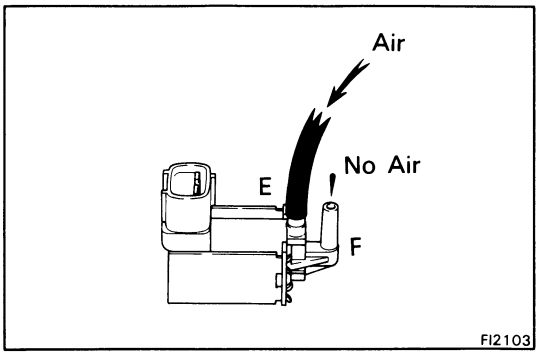

(d) Disconnect the battery terminals.

(e) Closed VSV.

If a problem is found, replace the VSV.

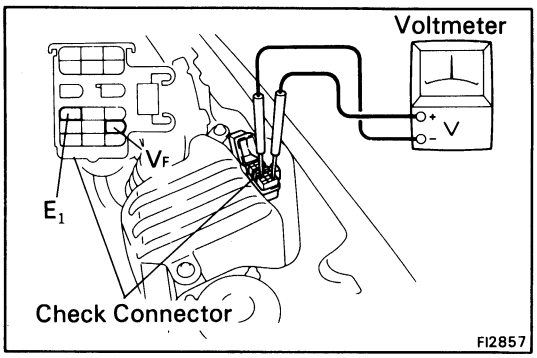

Oxygen Sensor

INSPECTION OF FEEDBACK VOLTAGE (V_F)

1. Warm up the engine.
2. Connect the positive (+) lead of a voltmeter to terminal V_F of the check connector and negative (−) lead to terminal E_1.

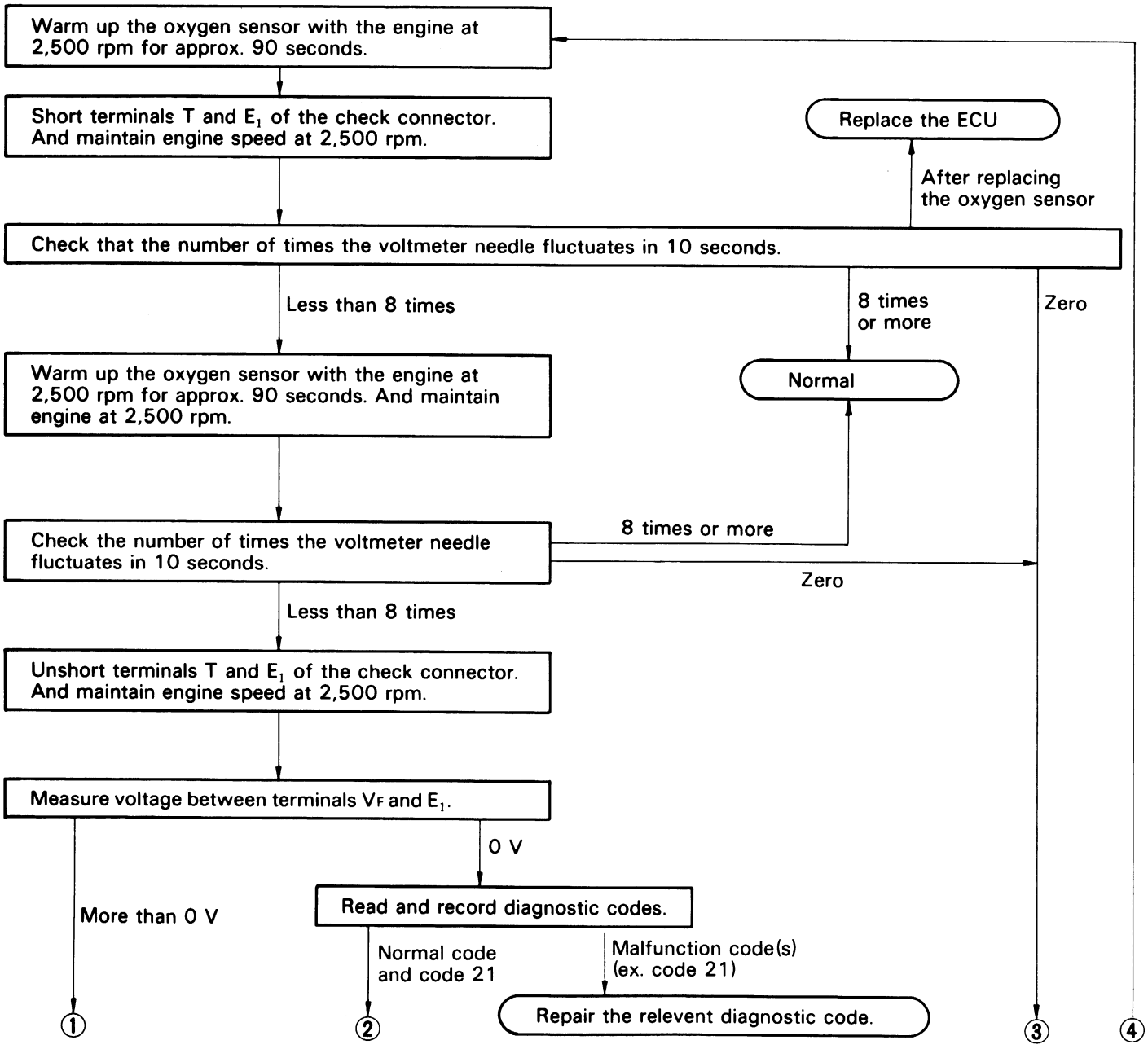

CONTINUED ON PAGE FI-121

CONTINUED FROM PAGE FI-120

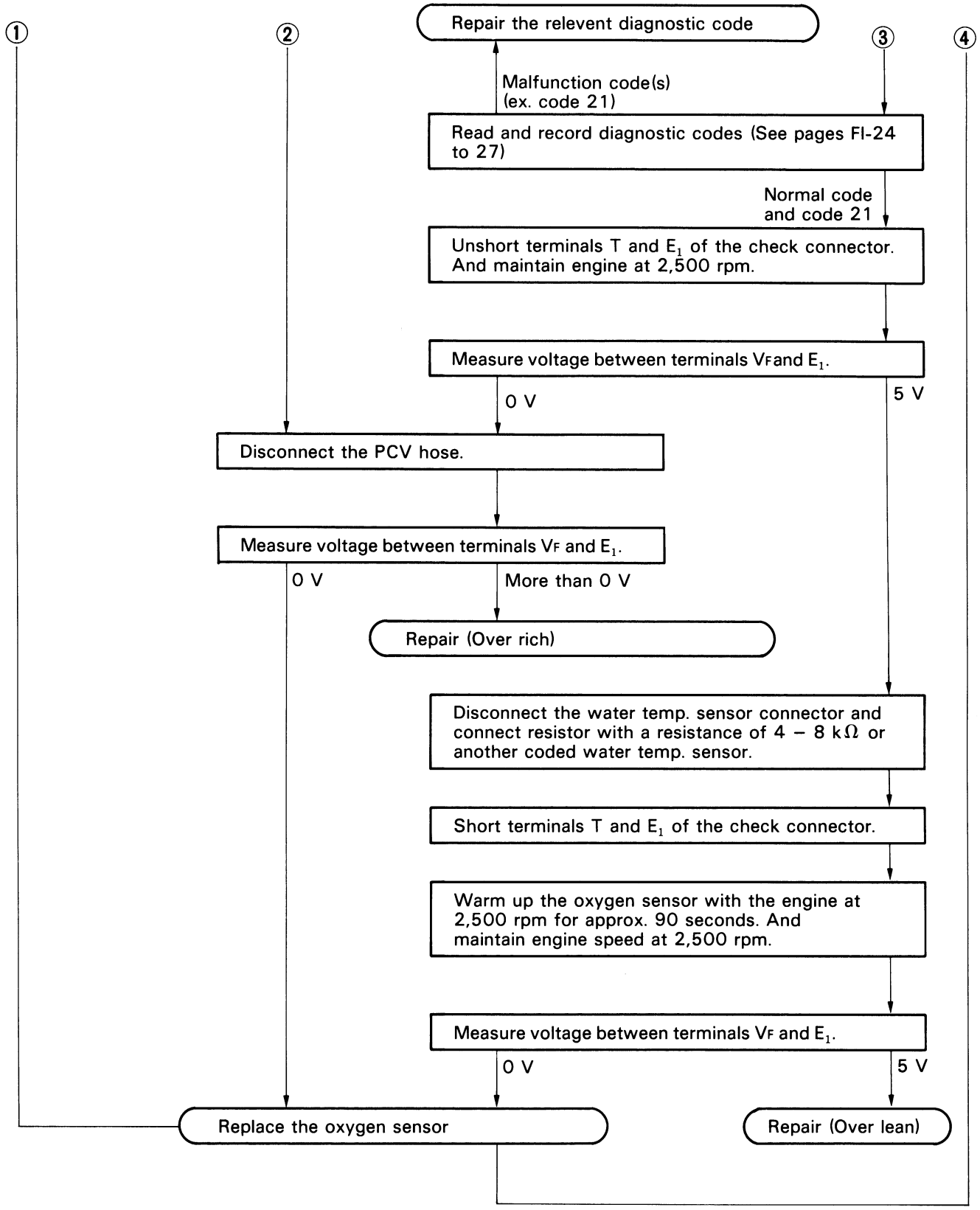

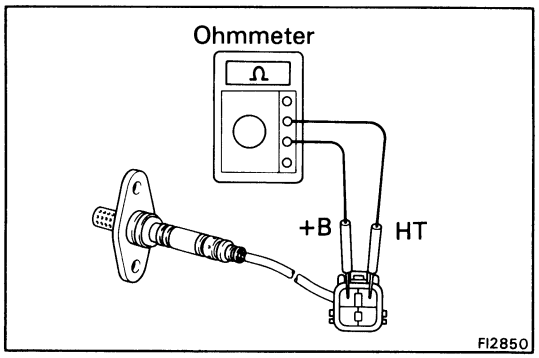

3. INSPECT HEATER COIL RESISTANCE OF OXYGEN SENSOR

Using an ohmmeter, measure the resistance between the terminals +B and HT.

Resistance: 5.1 – 6.3 Ω

If the resistance is not as specified, replace the sensor.

Electronic Controlled Unit (ECU)

INSPECTION OF ECU

1. MEASURE VOLTAGE OF ECU

NOTE: The EFI circuit can be checked by measuring the resistance and voltage at the wiring connectors of the ECU.

Check the voltages at the wiring connectors.

- Remove the rear luggage compartment trim.
- Turn the ignition switch ON.
- Measure the voltage at each terminal.

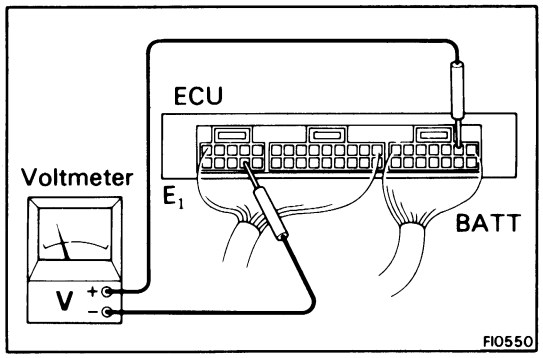

NOTE: 1. Perform all voltage measurements with the connectors connected.
2. Verify that the battery voltage is 11 V or above when the ignition switch is ON.

Connectors of ECU (4A-GE)

Symbol	Terminal	Symbol	Terminal	Symbol	Terminal
E01	Engine ground (Power)	T	Service connector	*L3	ECT Computor
E02	Engine ground (Power)	TSW	Water temperature switch	*ECT	ECT Computor
No. 10	No.3, 4 injector	IDL	Throttle position sensor	*L1	ECT Computor
No. 20	No.1, 2 injector	A/C	A/C Magnet clutch	*L2	ECT Computor
STA	Starter switch	IGF	Igniter	VC	Air flow meter
IG	Igniter	E2	Sensor ground	E21	Sensor ground
VF	Service connector	G ⊖	Engine revolution sensor	VS	Air flow meter
E1	Engine ground	OX	Oxygen sensor	STP	Stop light switch
*1 NSW	Neutral Start Switch	G ⊕	Engine revolution sensor	THA	Inlet air temp. sensor
S/TH	VSV (T-VIS)	VCC	Throttle position sensor	SPD	Speedometer sensor
FPU	VSV (FPU)	*2 THG	EGR temperature sensor	BATT	Battery
V-ISC	VSV (ISC)	VTA	Throttle position sensor	—	—
W	Warning light	NE	Engine revolution sensor	+B1	EFI main relay
HT	Oxygen sensor heater	THW	Water temp. sensor	+B	EFI main relay

*1 : For A/T
*2 : For Calif.

ECU Connectors

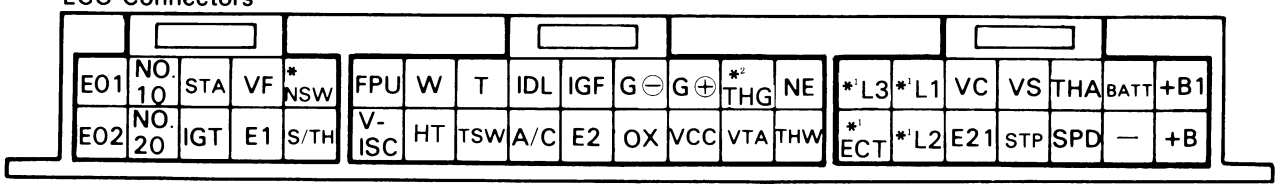

FI0234

Voltage at ECU Wiring Connectors (4A-GE)

Terminals	STD voltage	Condition	
BATT – E1	10 – 14	—	
+B – E1		Ignition SW ON	
+B1 – E1			
IDL – E2	M/T 4 – 5 A/T 10 – 14	Ignition SW ON	Throttle valve open
VTA – E2	0.1 – 1.0		Throttle valve fully closed
	4 – 5		Throttle valve fully open
VCC – E2	4 – 6	Ignition SW ON	
VC – E2	6 – 10	Ignition SW ON	—
VS – E2	2 – 5.5		Measuring plate fully closed
	6 – 9		Measuring plate fully open
	2 – 8	Idling	—
THA – E2	1 – 3	Ignition SW ON	Intake air temperature 20°C (68°F)
THW – E2	0.1 – 1.0	Ignition SW ON	Coolant temperature 80°C (176°F)
STA – E1	6 – 14	Ignition SW ST position and press on the clutch pedal (M/T)	
No. 10 – E01 No. 20 – E02	9 – 14	Ignition SW ON	
IGT – E1	0.7 – 1.0	Idling	
T – E1	10 – 14	Ignition SW ON	Service connector T ↔ E_1 not short
	0.5 or less		Service connector T ↔ E_1 short
A/C – E1	5 – 14	Ignition SW ON	A/C switch ON
	0.5 or less		A/C switch OFF
W – E1	0.5 or less	Ignition SW ON	
	9 – 14	Engine start	
S/TH – E1	0 – 2	Idling	
	10 – 14	More than 4,350 rpm	
* NSW – E1	0	Ignition SW ON	Shift position P or N range
	10 – 14		Ex. P or N range
	6 – 11	Cranking	

* : For A/T

Connectors of ECU (4A-GZE)

Symbol	Terminal	Symbol	Terminal	Symbol	Terminal
E01	Engine ground (Power)	G2	Engine revolution sensor	TIL	Super charger indicator lamp.
E02	Engine ground (Power)	VTA	Throttle position sensor	A/C	A/C Magnet clutch
RSC	ISC valve	NE	Engine revolution sensor	SPD	Speedometer sensor
RSO	ISC valve	IDL	Throttle position sensor	W	Warning light
STA	Starter switch	VSV3	VSV (Air bypass)	ELS1	Stop light
IGT	Igniter	HT	Oxygen sensor heater	FPU	VSV (FPU)
EGR	EGR valve	IGF	Igniter	THA	Inlet air temp. sensor
E1	Engine ground	OX	Oxygen sensor	KNK	Knock sensor
*1 NSW	Neutral start switch	THW	Water temperature sensor	VS	Air flow meter
SMC	Super charger relay	E2	Sensor ground	–	—
No. 10	No. 3, 4 injector	R/P	Fuel control switch	VC	Air flow meter
–	—	E22	Sensor ground	*2 THG	EGR temperature sensor
No. 20	No. 1, 2 injector	VSV2	VSV (Air bleed)	BATT	Battery
–	—	–	—	+B	EFI main relay
G ⊖	Engine revolution sensor	*1 L1	ECT computer	ELS2	Accessory switch
VF	Service connector	*1 L3	ECT computer	+B1	EFI main relay
G1	Engine revolution sensor	*1 L2	ECT computer	–	—
T	Service connector	ECT1	ECT computer	–	—

*1 : For A/T
*2 : For Calif.

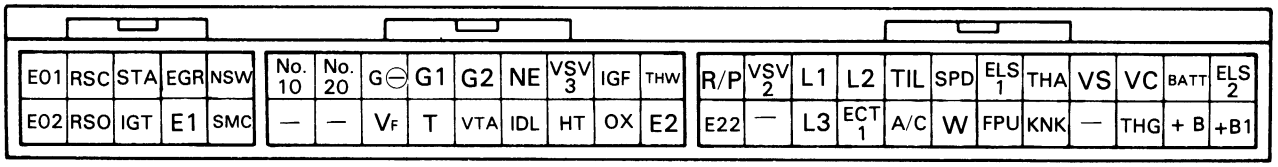

FI0574

Voltage at ECU Wiring Connectors (4A-GZE)

Terminals	STD voltage	Condition	
BATT – E1	10 – 14	—	
+ B1 + B – E1		Ignition SW ON	
IDL – E2	M/T 4 – 5 A/T 10 – 14	Ignition SW ON	Throttle valve open
VTA – E2	0.1 – 1.0		Throttle valve fully closed
	4 – 5		Throttle valve fully open
VC – E2	4 – 6		—
VS – E2	4 – 5	Ignition SW ON	Measuring plate fully closed
	0.02 – 0.5		Measuring plate fully open
	2 – 4	Idling	
THA – E2	1 – 3	Ignition SW ON	Intake air temperature 20°C (68°F)
THW – E2	0.1 – 1.0	Ignition SW ON	Coolant temperature 80°C (176°F)
STA – E1	6 – 14	Ignition SW ST position and press on the clutch pedal (M/T)	
No. 10 – E01 No. 20 – E02	9 – 14	Ignition SW ON	
IGT – E1	0.7 – 1.0	Idling	
T – E1	10 – 14	Ignition SW ON	Service connector T ↔ E_1 not short
	0.5 or less		Service connector T ↔ E_1 short
A/C – E1	5 – 14	Ignition SW ON	A/C switch ON
	0.5 or less		A/C switch OFF
W – E1	0.5 or less	Ignition SW ON	
	9 – 14	Engine start	
RSC – E1 RSO	9 – 14	Ignition SW ON	
* NSW – E1	0	Ignition SW ON	Shift position P or N range
	10 – 14		Ex. P or N range
	6 – 11	Cranking	

*: For A/T

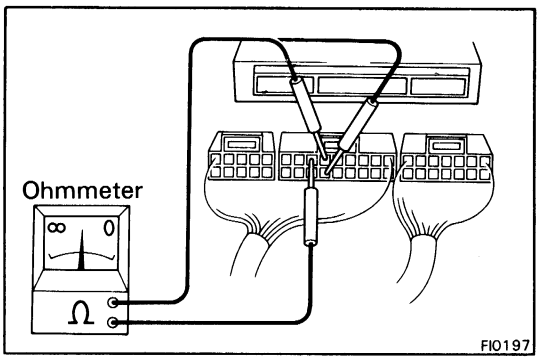

2. MEASURE RESISTANCE OF ECU

CAUTION:

1. Do not touch the ECU terminals.

2. The tester probe should be inserted into the wiring connector from the wiring side.

Check the resistance between each terminal of the wiring connector.

- Remove the rear luggage compartment trim.
- Unplug the wiring connectors from the ECU.
- Measure the resistance between each terminal of the wiring connectors.

Resistances at ECU Wiring Connectors (4A-GE)

Terminals	Condition	Resistance
IDL – E2	Throttle valve open	Infinity
	Throttle valve fully closed	2.3 kΩ or less
VTA – E2	Throttle valve fully open	3.3 – 10 kΩ
	Throttle valve fully closed	0.2 – 0.8 kΩ
VC – E2	—	100 – 300 Ω
VS – E2	Measuring plate fully closed	20 – 400 Ω
	Measuring plate fully open	20 – 3,000 Ω
VCC – E2	—	3 – 7 kΩ
THA – E2	Intake air temperature 20°C (68°F)	2 – 3 kΩ
THW – E2	Coolant temperature 80°C (176°F)	0.2 – 0.4 kΩ
G + – G ⊖	—	140 – 180 Ω

Resistances at ECU Wiring Connectors (4A-GZE)

Terminals	Condition	Resistance
IDL – E2	Throttle valve open	Infinity
	Throttle valve fully closed	2.3 kΩ or less
VTA – E2	Throttle valve fully open	3.3 – 10 kΩ
	Throttle valve fully closed	0.2 – 0.8 kΩ
VS – E2	Measuring plate fully closed	200 – 600 Ω
	Measuring plate fully open	20 – 1,200 Ω
THA – E2	Intake air temperature 20°C (68°F)	2 – 3 kΩ
THW – E2	Coolant temperature 80°C (176°F)	0.2 – 0.4 kΩ
G1 – G ⊖, G2 – G ⊖, NE – G⊖	—	140 – 180 Ω

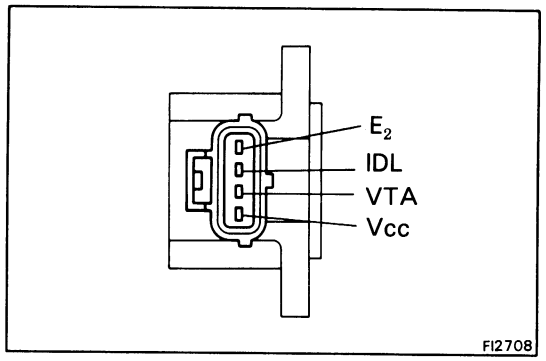

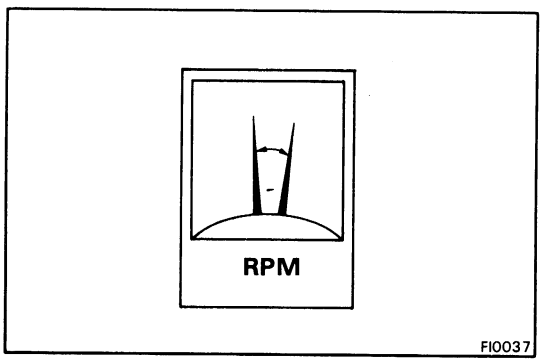

Fuel Cut RPM

INSPECTION OF FUEL CUT RPM

(a) Start and warm up the engine.

(b) Disconnect the throttle position sensor connector from the throttle position sensor.

(c) Short circuit terminals IDL and E_2 on the wire connector side.

(d) Gradually raise the engine rpm and check that there is fluctuation between the fuel cut and fuel return points.

NOTE: The vehicle should be stopped.

Fuel cut rpm:	**1,600 rpm (A/C OFF)**
	1,900 rpm (A/C ON)
Fuel return rpm:	**1,200 rpm (A/C OFF)**
	1,500 rpm (A/C ON)

COOLING SYSTEM

	Page
TROUBLESHOOTING	CO-2
CHECK OF ENGINE COOLANT	CO-2
REPLACEMENT OF ENGINE COOLANT	CO-3
WATER PUMP	CO-6
THERMOSTAT	CO-10
RADIATOR	CO-11
ELECTRIC COOLING FAN (RADIATOR)	CO-13
ELECTRIC COOLING FAN (ENGINE COMPARTMENT)	CO-17

TROUBLESHOOTING

Problem	Possible cause	Remedy	Page
Engine overheats	Check coolant	Replenish coolant	CO-3
	Water pump drive belt loose or missing	Adjust or replace belt	CO-9
	Dirt, leaves or insects on radiator	Clean radiator	
	Hoses, water pump, thermostat housing, radiator, heater, core plugs or head gasket leakage	Repair as necessary	
	Thermostat faulty	Check thermostat	CO-10
	Ignition timing retarded	Set timing	
	Electric cooling system faulty	Inspect electric cooling system	CO-13
	Radiator hose plugged or rotted	Replace hose	
	Water pump faulty	Replace water pump	CO-6
	Radiator plugged faulty	Check radiator	CO-11
	Cylinder head or block cracked or plugged	Repair as necessary	

NOTE: The thermostat on the A series engine is equipped with a by-pass valve. Therefore, if the engine tends to overheat, removal of the thermostat will an adversely effect, cooling efficiency.

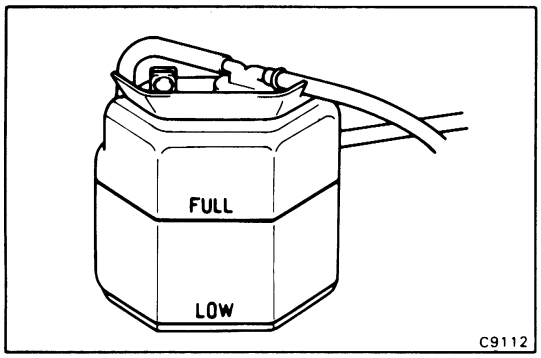

CHECK OF ENGINE COOLANT

1. CHECK COOLANT LEVEL

The coolant level should be between the LOW and FULL lines. If low, check for leakage and add coolant up to the FULL line.

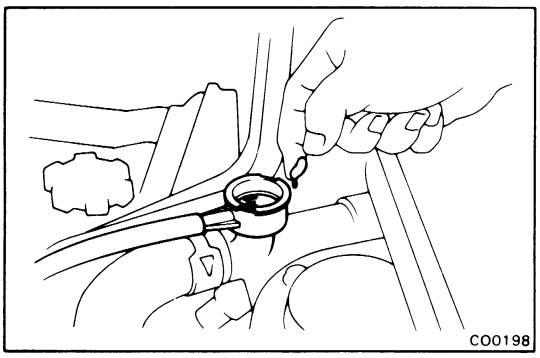

2. CHECK COOLANT QUALITY

There should not be any excessive deposits of rust or scales around the radiator cap (water filler cap) or radiator filler hole, and the coolant should also be free from oil. Replace the coolant if excessively dirty.

REPLACEMENT OF ENGINE COOLANT

COOLING CIRCUIT

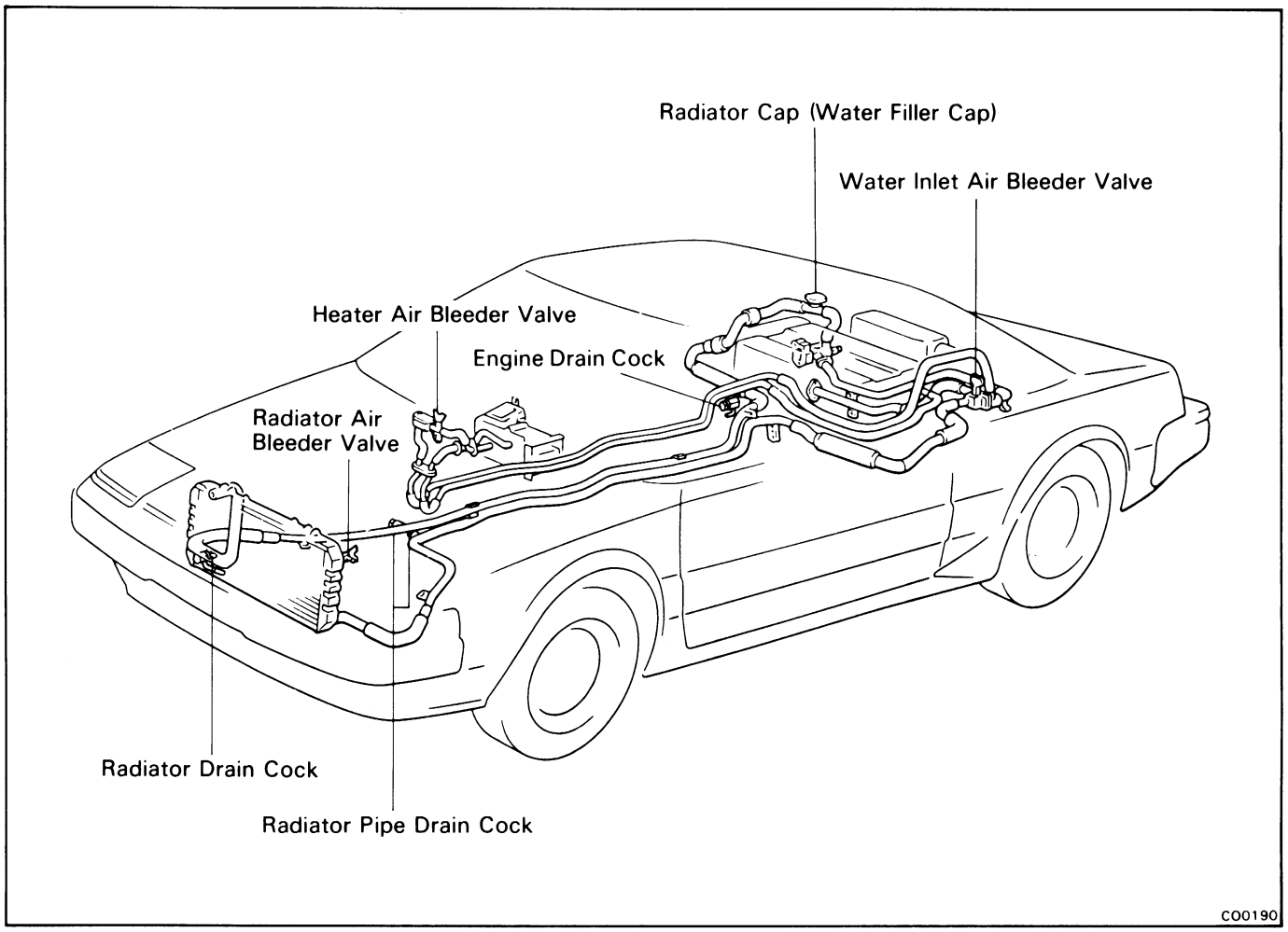

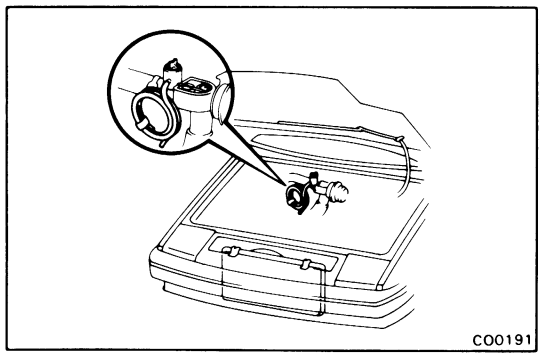

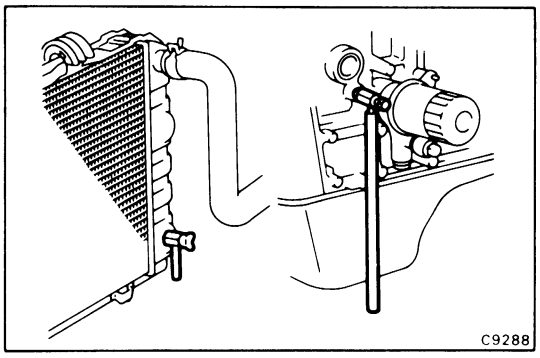

DRAINAGE OF ENGINE COOLANT

1. **REMOVE SPARE TIRE AND LUGGAGE COMPARTMENT TRIM**
2. **REMOVE SERVICE HOSE**
3. **REMOVE NO. 1 FUEL TANK PROTECTOR**
4. **SET HEATER CONTROL LEVER TO MAX HOT**
5. **REMOVE WATER FILER CAP**
6. **DRAIN COOLANT**
   (a) Connect the service hose to the drain cock.
   (b) Drain the coolant from the radiator and engine dra cocks.

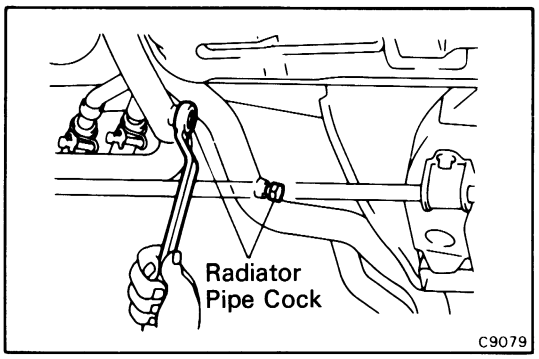

(c) Drain the coolant from the two radiator pipe's cocks.

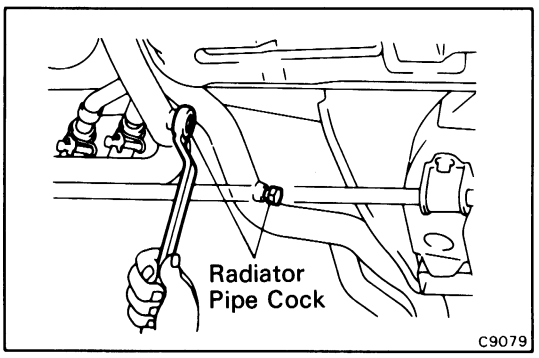

REPLACEMENT OF ENGINE COOLANT

1. CLOSE DRAIN COCKS

Tight the radiator drain cock and torque the engine and radiator pipes drain cocks.

Torque:

Radiator pipe	**170 kg-cm (12 ft-lb, 17 N·m)**
Engine	**130 kg-cm (9 ft-lb, 13 N·m)**

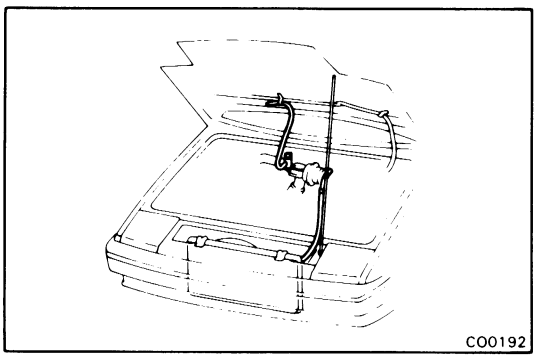

2. CONNECT SERVICE HOSES

(a) Connect the service hoses to the radiator and heater air bleeder valves.

(b) Suspend the opposite end of the hose connected to the radiator to the hood stay.

(c) Suspend the opposite end of the hose connected to the heater air bleeder valve to the windshield washer tube.

NOTE: Do not close-off or pinch any of the tubes.

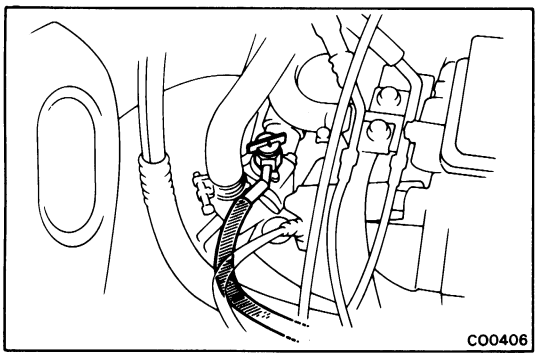

3. REFILL WITH COOLANT

NOTE: Use a good brand of ethylene-glycol base coolant, mixed according to the manufacturer's directions.

(a) Open the water inlet, radiator and heater air bleeder valves about three turns.

(b) Pour the coolant into the water filler.

(c) When the coolant begins to come out of the engine air bleeder valve, stop pouring and close the air drain valve.

(d) Again, pour coolant into the water filler hole until it is full.

(e) Check that the coolant levels in the suspended tubes come up to the level of the water filler nozzle.

If the coolant level in either tube does not come up to filler nozzle lever, check the tube for folds or obstructions. Repeat steps (d) and (e) above.

Total capacity:

12.4 liters (13.1 US qts, 10.9 Imp. qts)

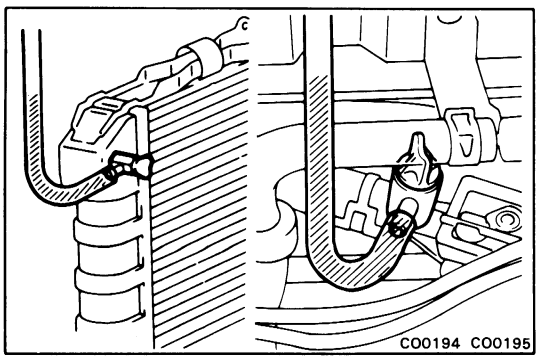

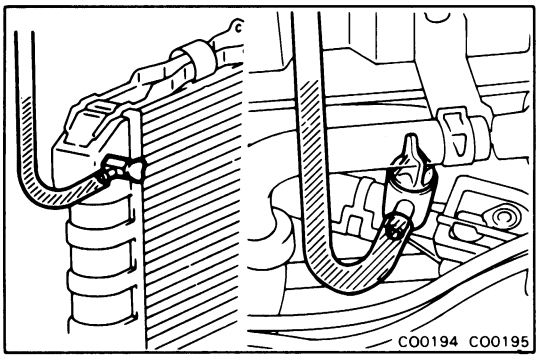

(f) Close the radiator and heater air bleeder valves.

(g) Disconnect the service hoses.

NOTE: When removing the service hoses, place a rag beneath the valve to catch any dripping coolant.

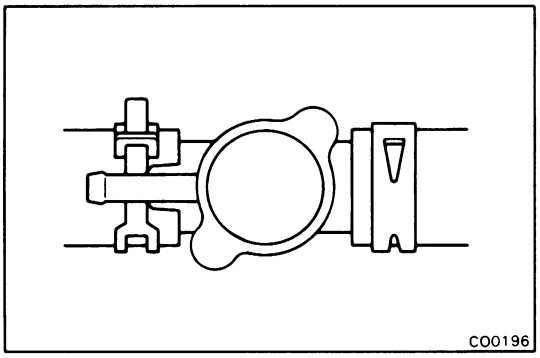

(h) Fasten the radiator cap (water filler cap) to the first stop point.

NOTE: Do not tighten the radiator cap completely (to the second stop point).

(i) Start the engine and run at fast idle for about 3 minutes, and then turn it off.

If the level of the radiator filler hole falls add coolant as before.

Then repeat steps (h) and (i) above.

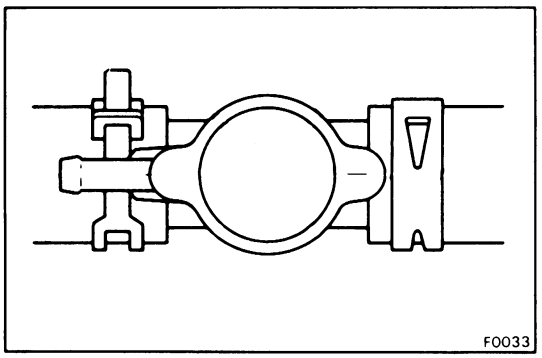

(j) Completely tighten the radiator cap.

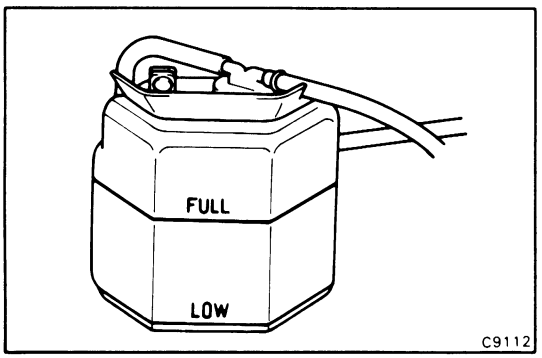

(k) Fill coolant into the reservoir tank up to the "FULL" mark.

4. INSTALL NO. 1 FUEL TANK PROTECTOR

5. INSTALL SERVICE HOSE

NOTE: Thoroughly flush out remaining coolant in hoses.

6. START ENGINE AND CHECK FOR LEAKS

7. INSTALL FRONT LUGGAGE COMPARTMENT TRIM AND SPARE TIRE

WATER PUMP

COMPONENTS

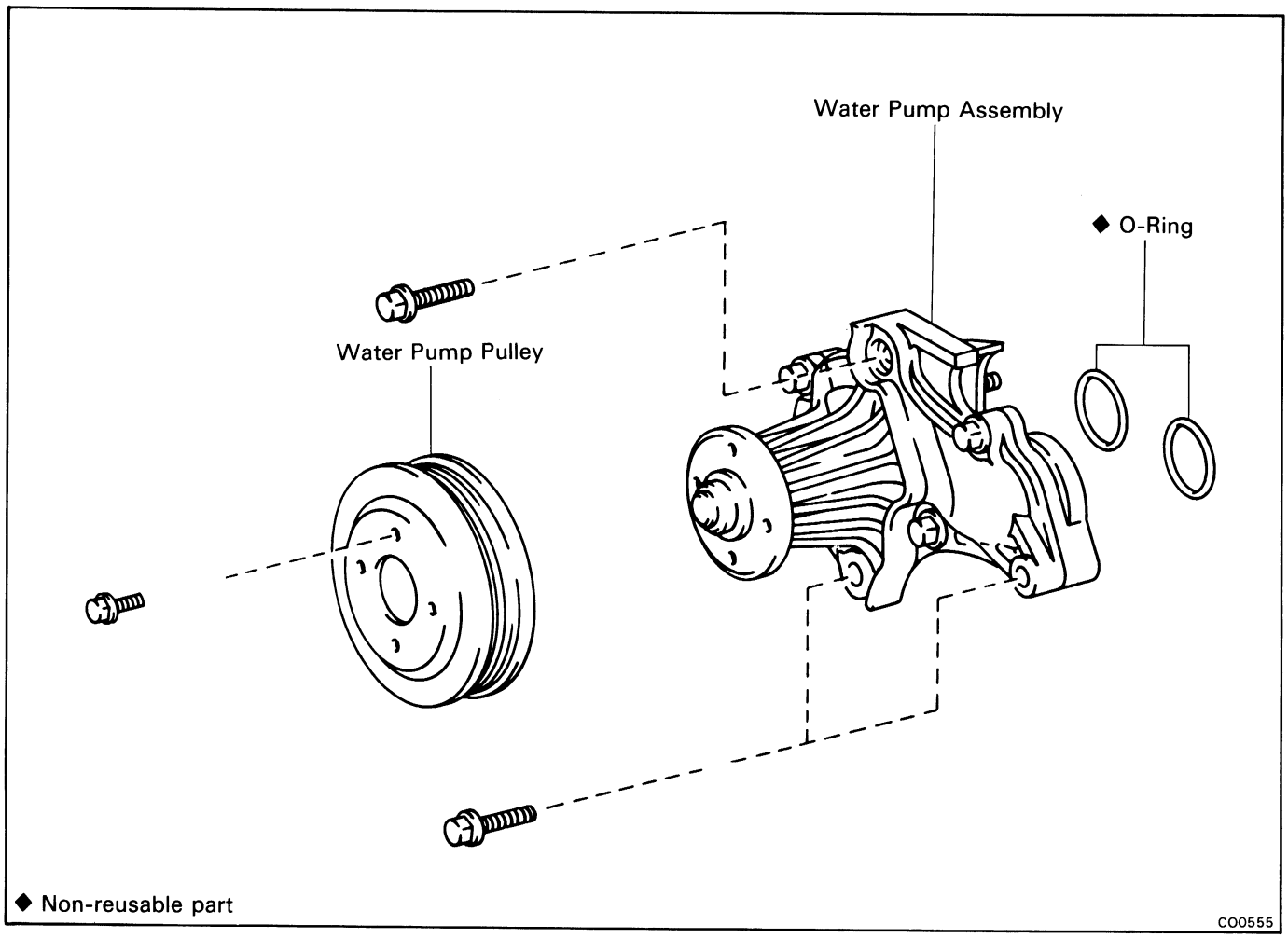

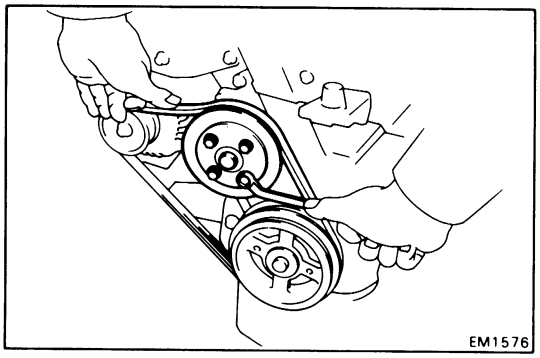

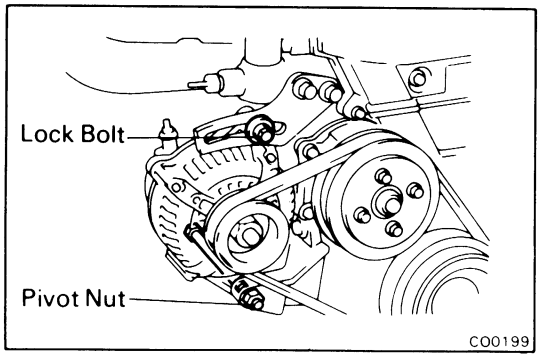

REMOVAL OF WATER PUMP

1. **DRAIN COOLANT (See page CO-3)**
2. **IF VEHICLE HAS AIR CONDITIONING, REMOVE COMPRESSOR DRIVE BELT AND IDLE PULLEY**
3. **REMOVE ALTERNATOR DRIVE BELT**
   (a) Loosen the water pump pulley bolts.
   (b) Loosen the lock bolt and pivot nut.
   (c) Move the alternator fully right, and remove the drive belt.
4. **REMOVE WATER PUMP PULLEY**
   Remove the four bolts and pump pulley.

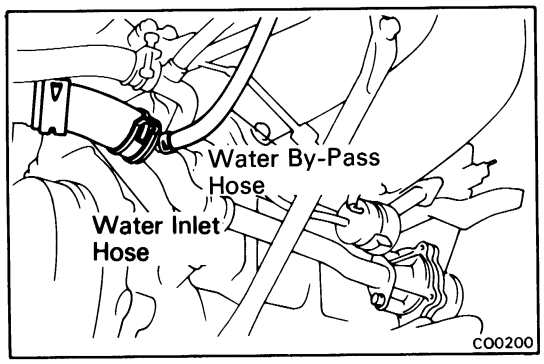

5. REMOVE WATER INLET PIPE

(a) Disconnect the water inlet and water by-pass hoses from the inlet pipe.

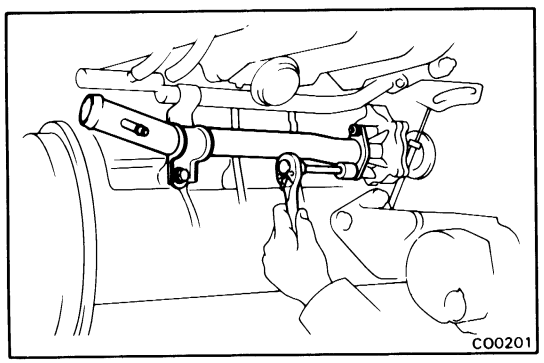

(b) Remove the two nut and clamp bolts.

(c) Remove the water inlet pipe and O-ring.

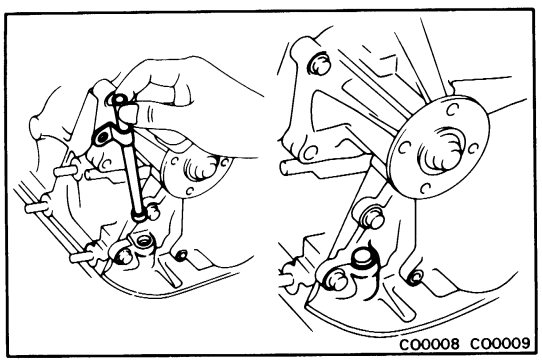

6. REMOVE OIL DIPSTICK GUIDE AND DIPSTICK

Remove the mounting bolt and pull out the oil dipstick guide and dipstick.

NOTE: After pulling out the oil dipstick guide, be sure to plug the oil pump body hole.

7. REMOVE NO. 3 AND NO. 2 TIMING BELT COVERS AND GASKETS

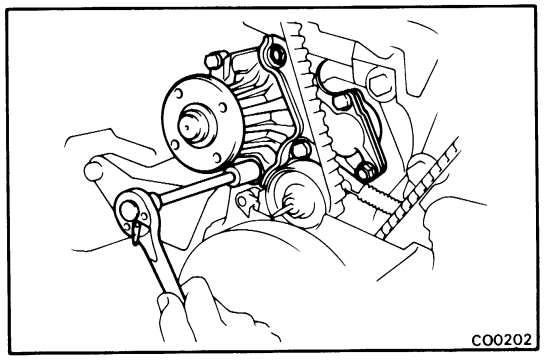

8. REMOVE WATER PUMP

Remove the three bolts and water pump.

CAUTION: Be careful not to get coolant on the timing belt.

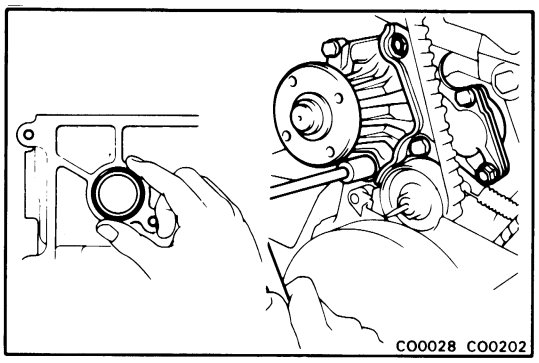

INSTALLATION OF WATER PUMP

1. INSTALL WATER PUMP

Place the water pump O-ring on the block and install the pump with three bolts.
Torque the bolts.

Torque: 150 kg-cm (11 ft-lb, 15 N·m)

2. INSTALL NO. 2 AND NO. 3 TIMING BELT COVERS WITH GASKETS

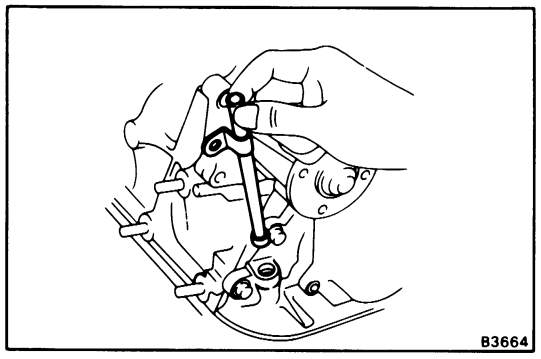

3. INSTALL OIL DIPSTICK GUIDE AND DIPSTICK

(a) Install a new O-ring on the oil dipstick guide.
(b) Apply small amount of engine oil to O-ring.
(c) Push in the oil dipstick guide with the O-ring.
(d) Install the mounting bolt.

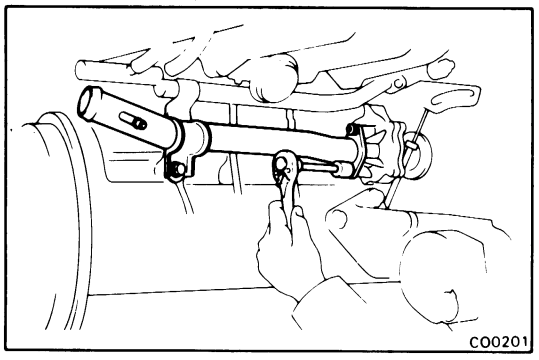

4. INSTALL INLET PIPE

(a) Install the inlet pipe and a new O-ring to the water pump with the two nuts.
(b) Install the inlet pipe clamp bolt.

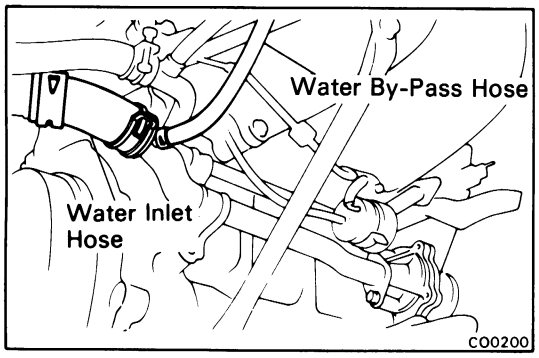

(c) Connect the water inlet and water by-pass hoses to the inlet pipe.

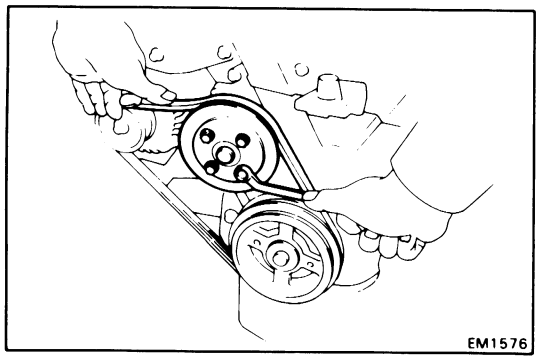

5. INSTALL WATER PUMP PULLEY AND ALTERNATOR DRIVE BELT

(a) Install the water pump pulley and temporarily tighten the four bolts.
(b) Place the drive belt the each pulley and set up the drive belt.
(c) Tighten the four bolts.

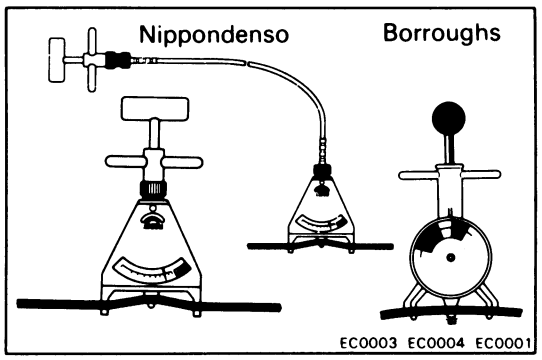

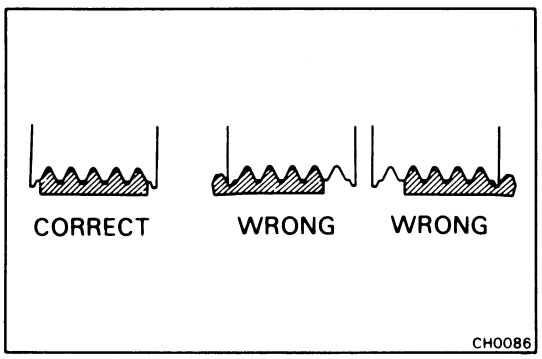

6. ADJUST DRIVE BELT TENSION

Using a belt tension gauge, adjust the drive belt tension.

Belt tension gauge:

Nippondenso	BTG-20 (95506-00020) or
Borroughs	No. BT-33-73F

Drive belt tension:

Alternator	**New belt**	**175 ± 5 lb**
	Used belt	**115 ± 20 lb**
A/C	**New belt**	**160 ± 20 lb**
	Used belt	**105 ± 10 lb**

NOTE:

- "New belt" refers to a belt which has been used less than 5 minutes on a running engine.
- "Used belt" refers to a belt which has been used on a running engine for 5 minutes or more.
- After installing the drive belt, check that it fits properly in the ribbed grooves.

7. REFILL WITH COOLANT (See page CO-4)

8. START ENGINE AND CHECK FOR LEAKS

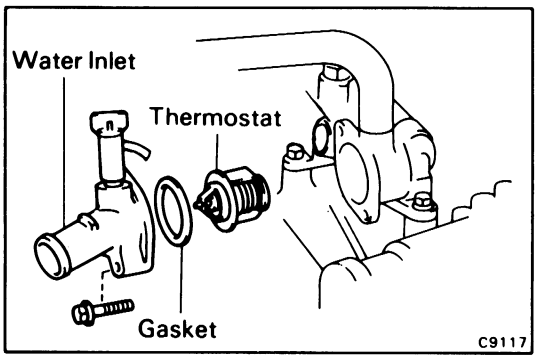

THERMOSTAT

REMOVAL OF THERMOSTAT

1. **DRAIN COOLANT (See page CO-3)**

2. **REMOVE WATER INLET AND THERMOSTAT**

   Remove the two bolts, the water inlet and thermostat from the water inlet housing.

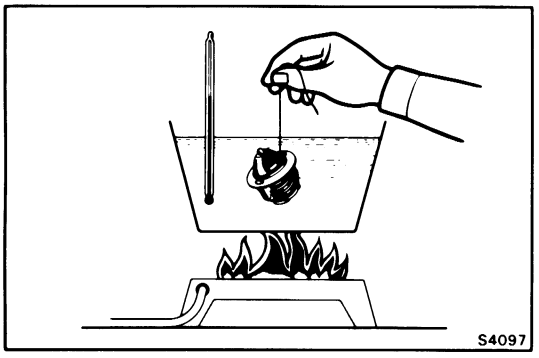

INSPECTION OF THERMOSTAT

NOTE: The thermostat is numbered according to the valve opening temperature.

(a) Immerse the thermostat in water and heat the water gradually.

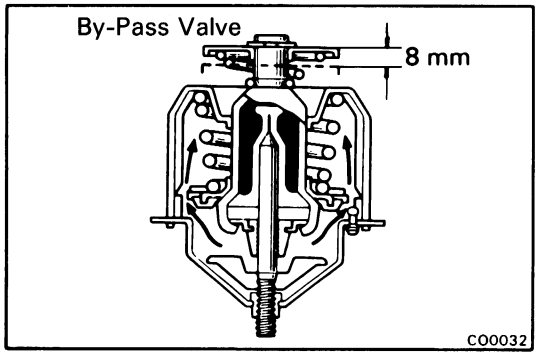

(b) Check the valve opening temperature and valve lift.

If the valve opening temperature and valve lift are not within the following specifications, replace the thermostat.

Low temperature type:

Valve opening temperature	**80 – 84°C (176 – 183°F)**
Valve lift	**More than 8 mm (0.31 in.) at 95°C (203°F)**

(c) Check that valve spring is tight when the thermostat is fully closed. Replace as necessary.

INSTALLATION OF THERMOSTAT

1. **INSTALL THERMOSTAT AND WATER INLET**

   Install the water inlet on a new gasket with two bolts.

2. **REFILL RADIATOR WITH COOLANT (See page CO-4)**

3. **START ENGINE AND CHECK FOR LEAKS**

RADIATOR

CLEANING OF RADIATOR

Using water or steam cleaner, remove any mud and dirt from the radiator core.

CAUTION: If using a high pressure type cleaner, be careful not to deform radiator core fins. Keep a distance of more than 40 – 50 cm (15.75 – 19.69 in.) between the radiator core and cleaner nozzle when the cleaner nozzle pressure is 30 – 35 kg-cm² (427 – 498 psi, 2,942 – 3,432 kPa).

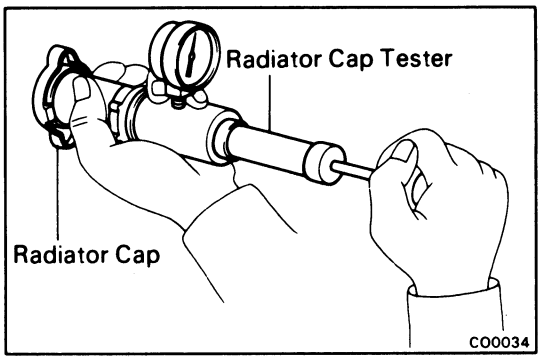

INSPECTION OF RADIATOR

1. **CHECK RADIATOR CAP (WATER FILLER CAP)**

   Using a radiator cap tester, pump the tester until the relief valve opens. Check that the valve opens between 0.75 kg/cm² (10.7 psi, 74 kPa) and 1.05 kg/cm² (15 psi, 103 kPa).

   Check that the pressure gauge does not drop rapidly when pressure on the cap is below 0.6 kg/cm² (8.5 psi, 59 kPa).

   If either check is not within limits, replace the cap.

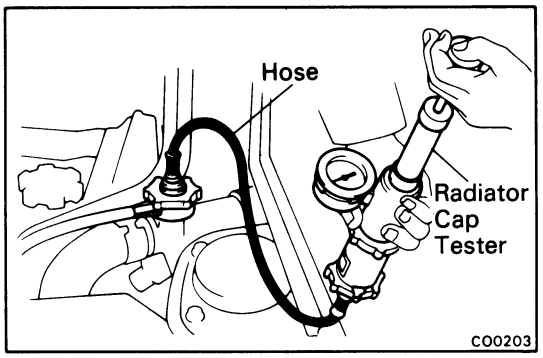

2. **CHECK COOLING SYSTEM FOR LEAKS**

   (a) Fill the radiator with coolant and attach a radiator cap tester.

   (b) Warm up the engine.

   (c) Pump it to 1.2 kg/cm² (17 psi, 118 kPa), check that pressure does not drop.

   If the pressure drops, check for leaks from the hoses, pipes, radiator or water or water pump. If no external leaks are found, check the heater core, block and head.

REMOVAL OF RADIATOR

1. **DRAIN COOLANT (See page CO-3)**
2. **REMOVE ELECTRIC COOLING FAN(S) (See page CO-16)**
3. **DISCONNECT TEMPERATURE SWITCH CONNECTOR**
4. **DISCONNECT TWO RADIATOR HOSES**
5. **REMOVE TWO RADIATOR SUPPORTS AND RADIATOR**

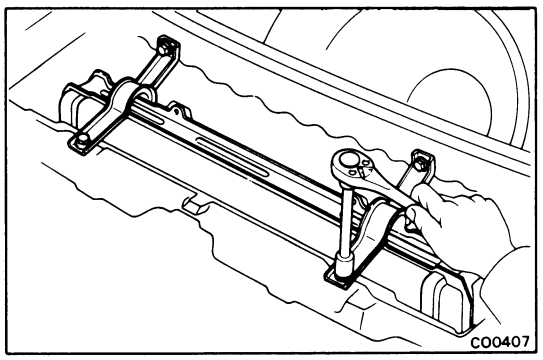

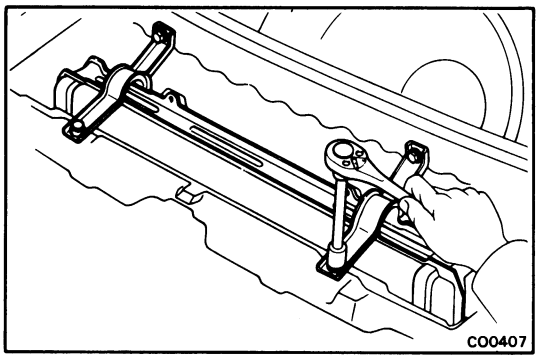

INSTALLATION OF RADIATOR

1. **INSTALL RADIATOR AND SUPPORT**

   Place the radiator in installed position and install the two supports with two bolts.

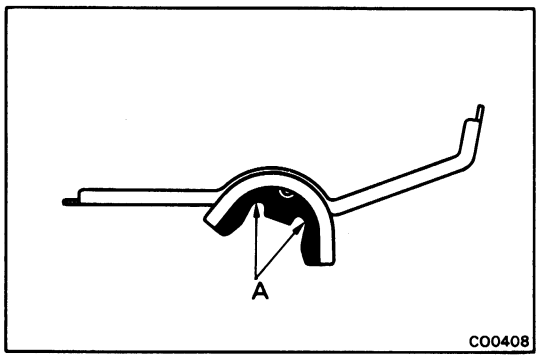

NOTE: After installation, confirm that the rubber cushion (A) of the support is not depressed.

2. **CONNECT TWO RADIATOR HOSES**
3. **CONNECT TEMPERATURE SWITCH CONNECTOR**
4. **INSTALL ELECTRIC COOLING FANS (See page CO-16)**
5. **REFILL WITH COOLANT (See page CO-4)**
6. **START ENGINE AND CHECK FOR LEAKS**

ELECTRIC COOLING FAN (RADIATOR)

COMPONENTS

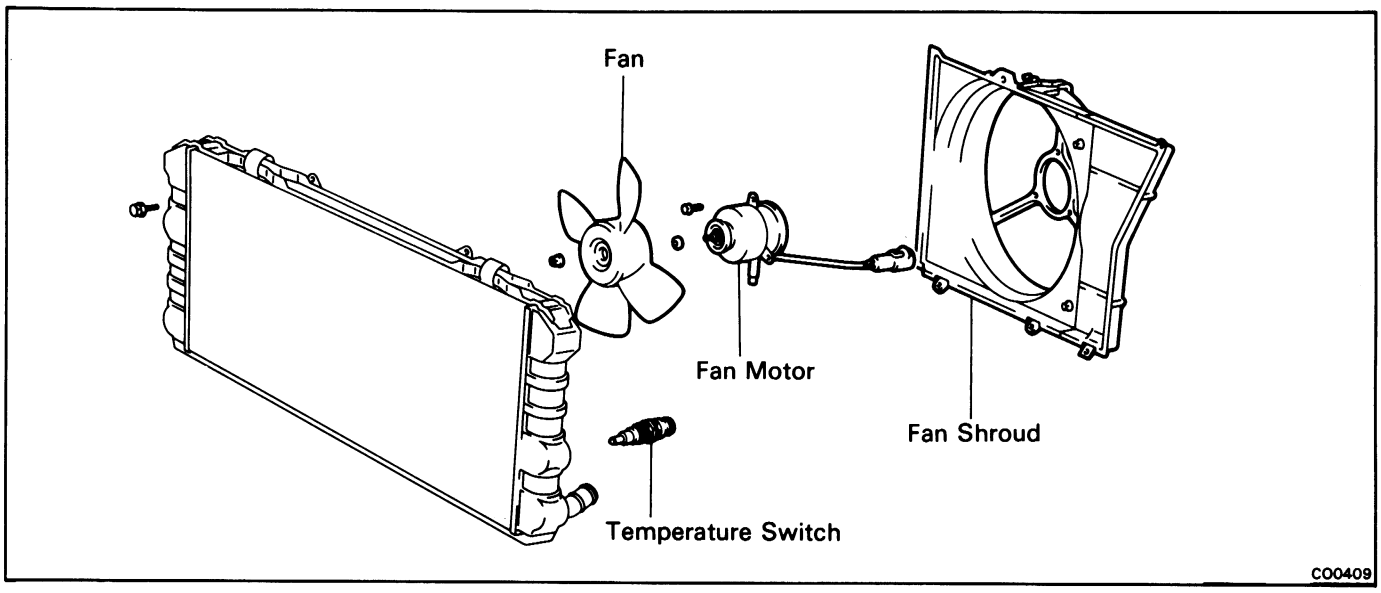

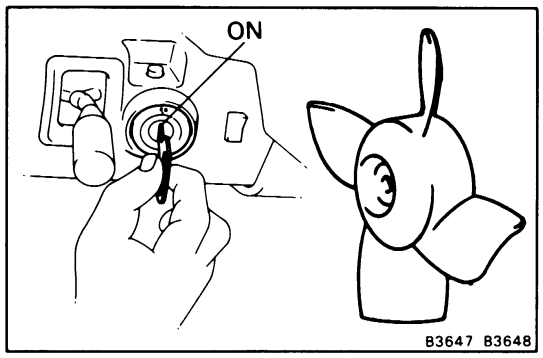

ON-VEHICLE INSPECTION

Low Temperature [below 83°C (181°F)]

1. TURN IGNITION SWITCH ON

Confirm that the fan stops.

If it doesn't, check the fan relay and temperature switch, and check for a separated connector or severed wire between the relay and temperature switch.

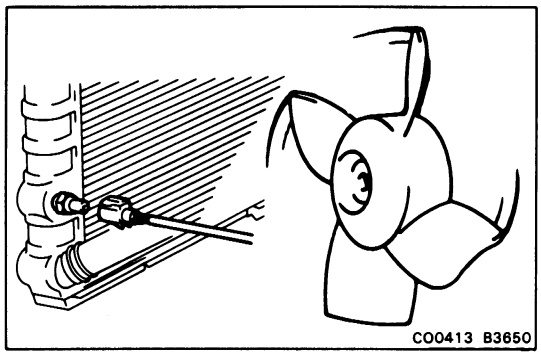

2. DISCONNECT TEMPERATURE SWITCH CONNECTOR

Confirm that the fan rotates.

If it doesn't, check the fan relay, fan motor, ignition relay and fuse, and check for a short circuit between the fan relay and temperature switch.

3. CONNECT TEMPERATURE SWITCH CONNECTOR

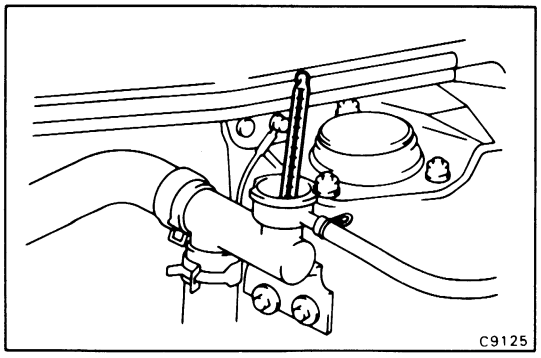

High Temperature [above 93°C (199°F)]

4. START ENGINE

(a) Raise the engine temperature to above 93°C (199°F).

(b) Confirm that the fan rotates.

If it doesn't, replace the temperature switch.

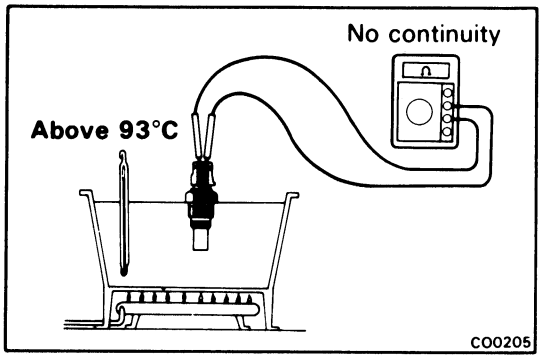

INSPECTION OF ELECTRIC COOLING FAN

1. INSPECT TEMPERATURE SWITCH

NOTE: The switch is located at the radiator right side.

(a) Using an ohmmeter, check that there is no continuity when the coolant is above 93°C (199°F).

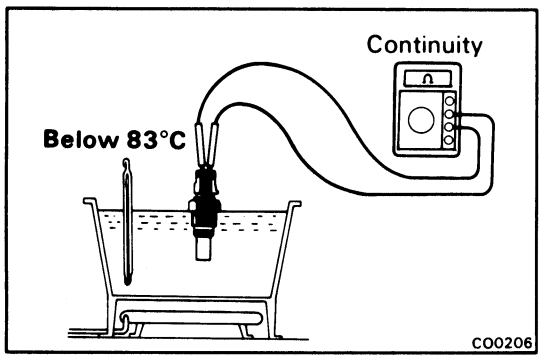

(b) Check that there is continuity when the coolant temperature is below 83°C (181°F).

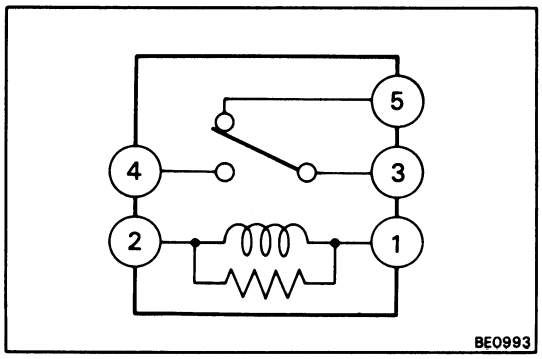

2. INSPECT FAN MAIN RELAY

NOTE: The relay is located in the No. 5 junction block of the front luggage compartment.

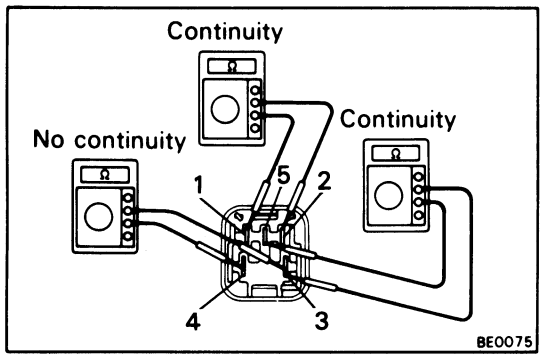

Inspect Relay Continuity

(a) Using an ohmmeter, check that there is continuity between terminals 1 and 2.

(b) Check that there is continuity between terminals 3 and 5.

(c) Check that there is no continuity between terminals 3 and 4.

If continuity is not as specified, replace the relay.

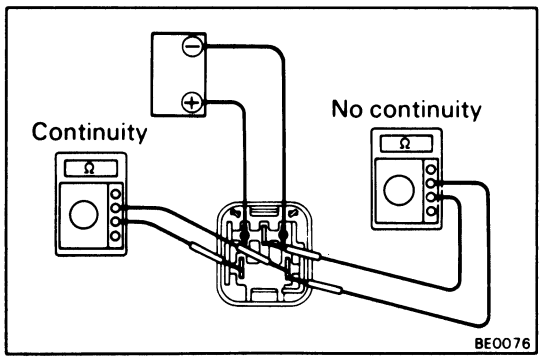

Inspect Relay Operation

(a) Apply battery voltage across terminals 1 and 2.

(b) Using an ohmmeter, check that there is continuity between terminals 3 and 4.

(c) Check that there is no continuity between terminals 3 and 5.

If operation is not as described, replace the relay.

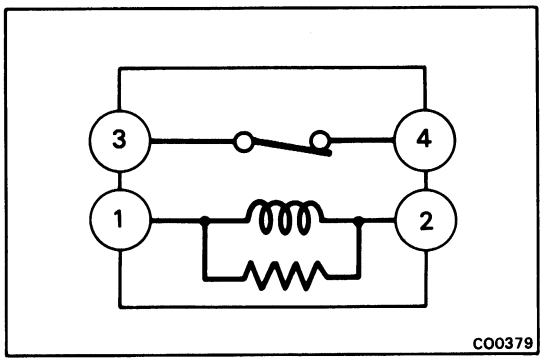

3. INSPECT NO. 1 FAN RELAY

NOTE: The relay located in the No. 5 junction block of the front luggage compartment.

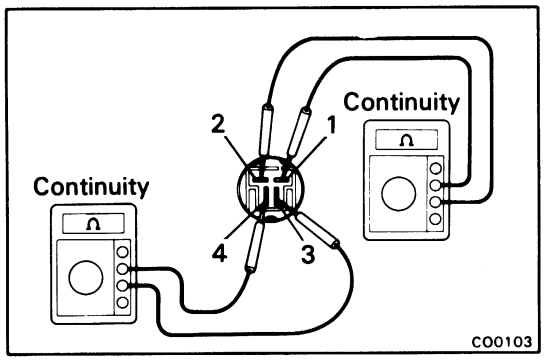

Inspect Relay Continuity

(a) Using an Ohmmeter, check that there is continuity between terminals 1 and 2.

(b) Check that there is continuity between terminals 3 and 4.

If continuity is not as specified, replace the relay.

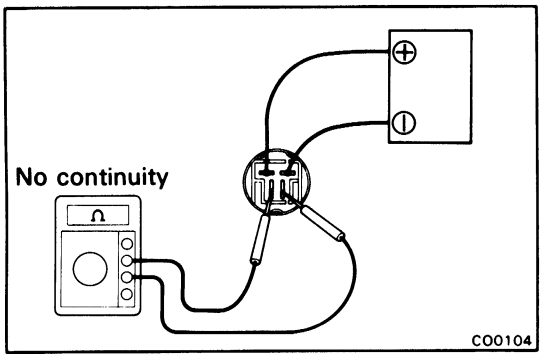

Inspect Relay Operation

(a) Apply battery voltage across terminals 1 and 2.

(b) Check that there is no continuity between terminals 3 and 4.

If operation is not as described, replace the relay.

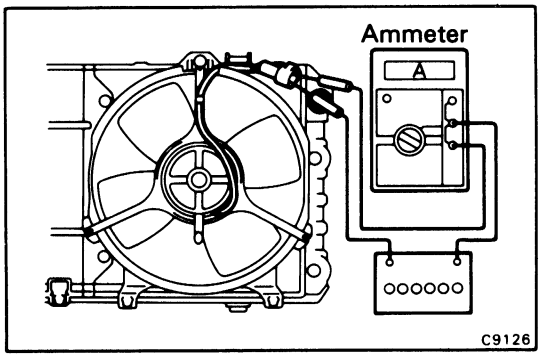

4. INSPECT FAN MOTOR

(a) Connect the battery and ammeter to the fan motor connector.

(b) Check to see that the motor rotates smoothly, and current is as follows:

Current: 5.8 – 7.4 A (M/T)
8.8 – 10.8 A (A/T)

REMOVAL OF ELECTRIC COOLING FAN

1. **DISCONNECT CONNECTOR OF FAN MOTOR**
2. **REMOVE ELECTRIC COOLING FAN**
   Remove the five bolts and electric cooling fan.

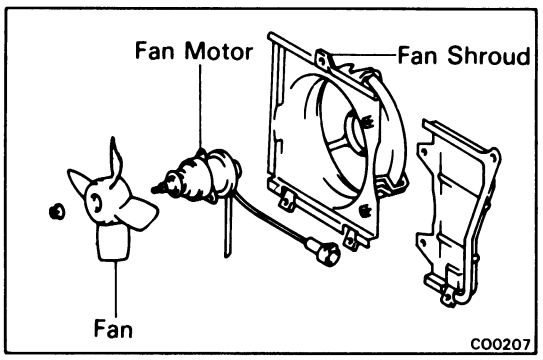

DISASSEMBLY OF ELECTRIC COOLING FAN

(See page CO-13)

1. **REMOVE FAN**
   Remove the nut and fan.
2. **REMOVE FAN MOTOR**
   Remove the three screws and fan motor.

ASSEMBLY OF ELECTRIC COOLING FAN

(See page CO-13)

1. **INSTALL FAN MOTOR**
   Install the fan with the three screws.
2. **INSTALL FAN**
   Install the fan with the nut.

INSTALLATION OF ELECTRIC COOLING FAN

1. **INSTALL ELECTRIC COOLING FAN(S)**
2. **CONNECT CONNECTOR OF FAN MOTOR**

ELECTRIC COOLING FAN (ENGINE COMPARTMENT)

COMPONENTS

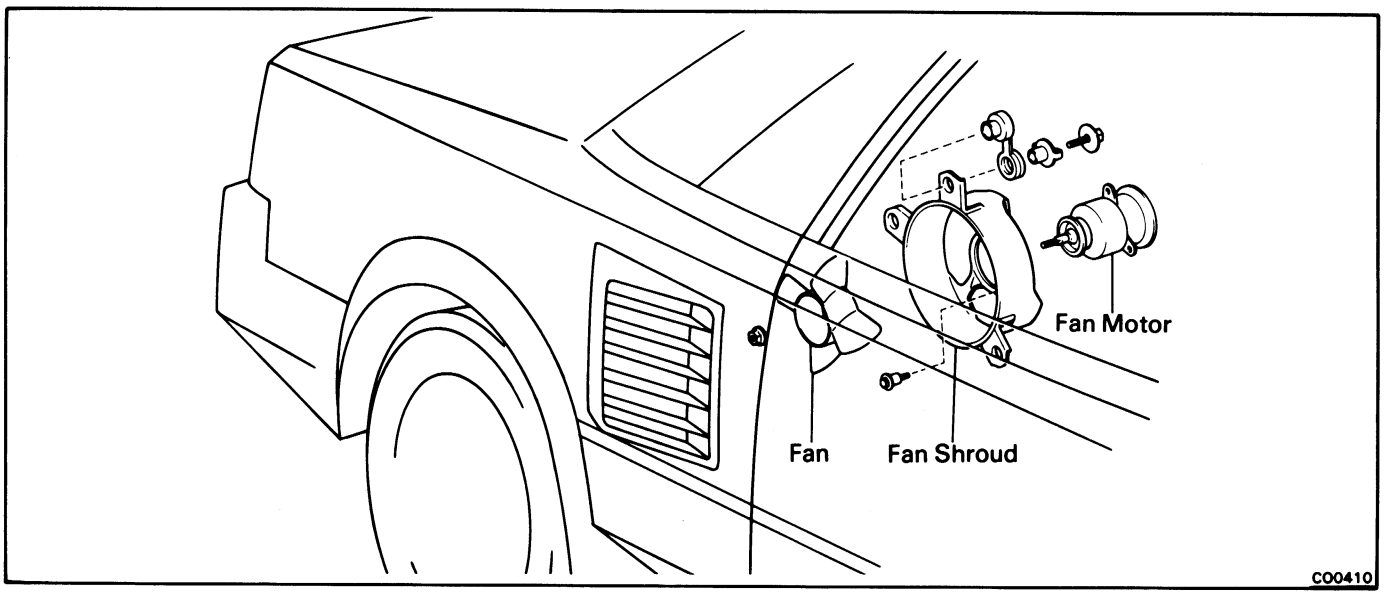

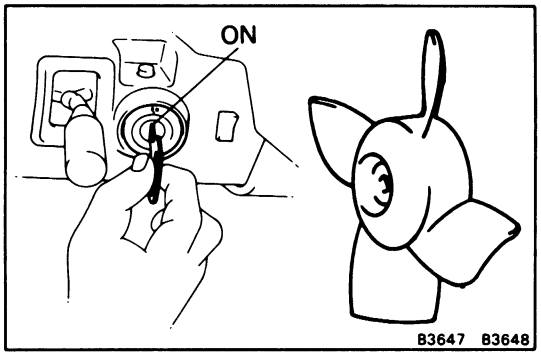

ON-VEHICLE INSPECTION

Low Temperature [below 54°C (129°F)]

1. **TURN IGNITION SWITCH ON**

   Confirm that the fan stops.

   If it doesn't, then check the fan relay and temperature sensor, and check for a separated connector or severed wire between the relay and temperature sensor.

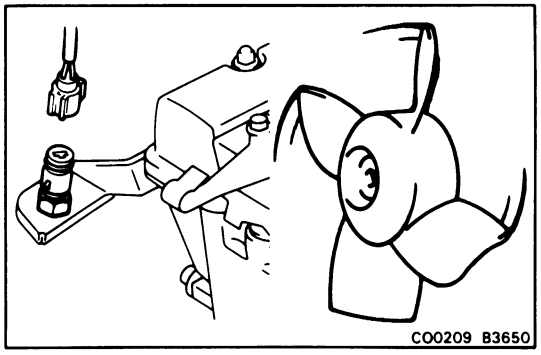

2. **DISCONNECT TEMPERATURE SENSOR CONNECTOR**

   Confirm that the fan rotates.

   If it doesn't, then check the fan relay, fan motor, engine main relay, temperature sensor and cooling fan computer.

3. **CONNECT TEMPERATURE SENSOR CONNECTOR**

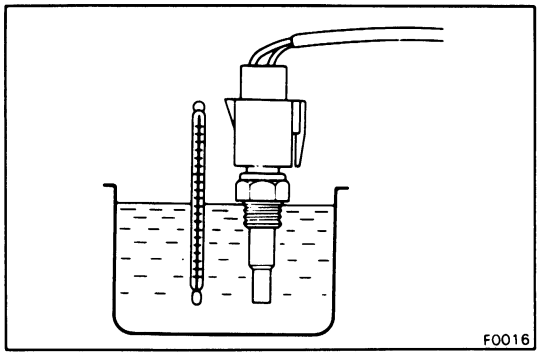

High Temperature [above 70°C (158°F)]

4. **START ENGINE**

   (a) Raise the engine temperature to above 70°C (158°F).

   (b) Confirm that the fan rotates.

   If it doesn't, replace the temperature sensor.

INSPECTION OF COOLING FAN CIRCUIT

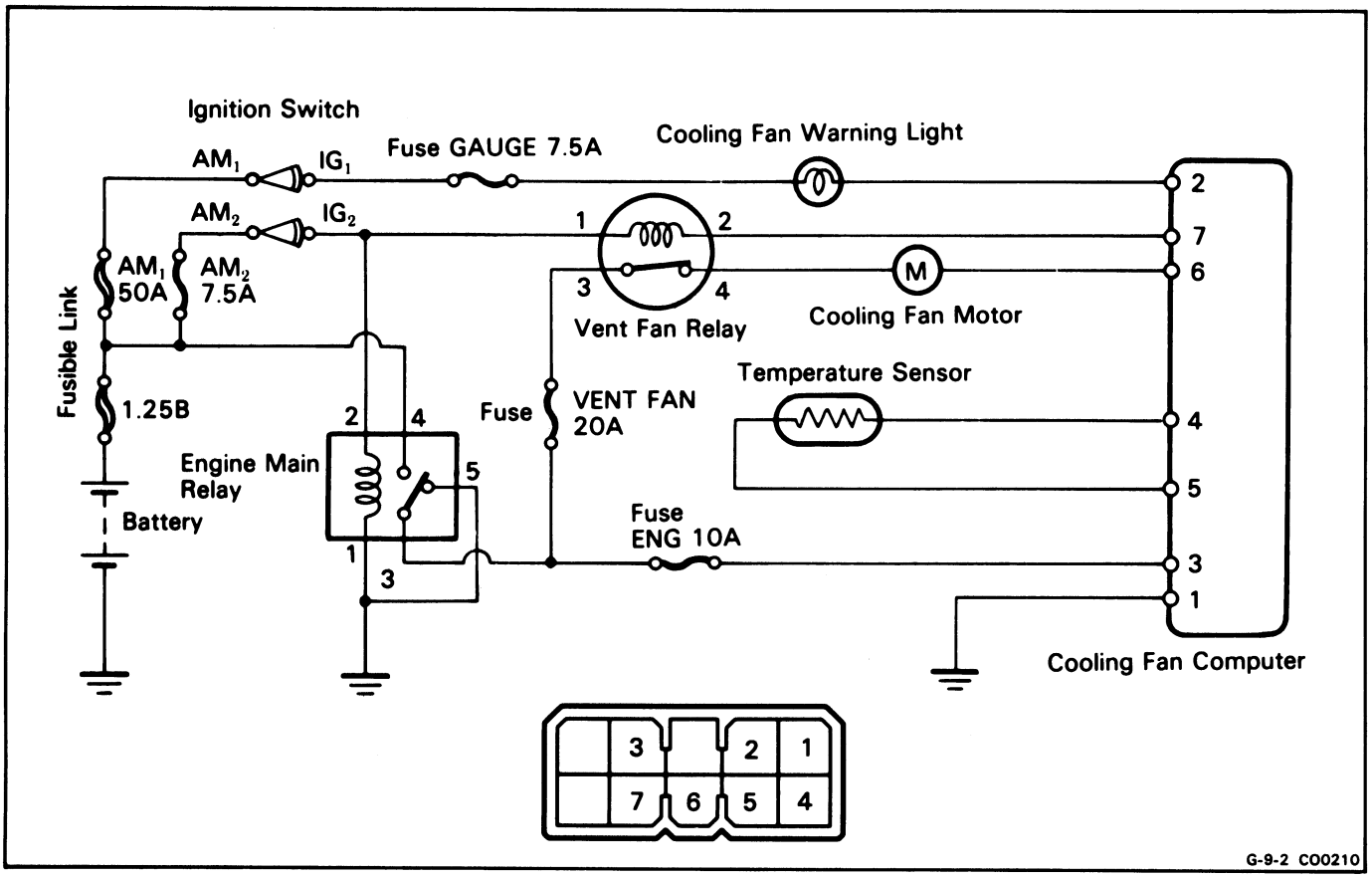

Terminals	Condition	Result
1 – Body ground	——	Coninuty
1 – 3	Ignition SW ON	There is battery voltage.
4 – 5	Less than 54°C (129°F) (Temp. sensor) More than 70°C (158°F)	More than 600 Ω (Sensor resistance) Less than 415 Ω
1 – 2	Ignition SW ON	The cooling fan warning light lights
1 – 6		Fan motor runs and warning light lights
1 – 6	Ignition SW ON and Continuity 7-1	Fan motor stops

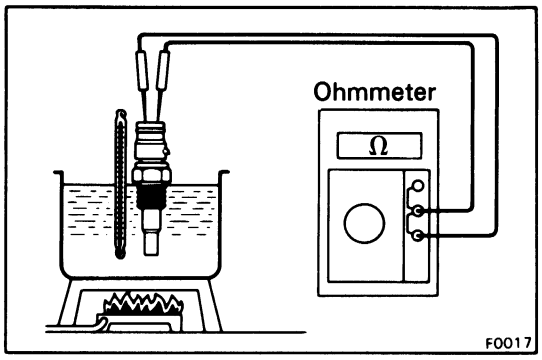

INSPECTION OF ELECTRIC COOLING FAN

1. INSPECT TEMPERATURE SENSOR

NOTE: The sensor located at the cylinder head rear plate.

Using an ohmmeter, measure the resistance of the temperature sensor.

Resistance

Less than 54°C (129°F)	**More than 600 Ω**
More than 70°C (158°F)	**Less than 415 Ω**

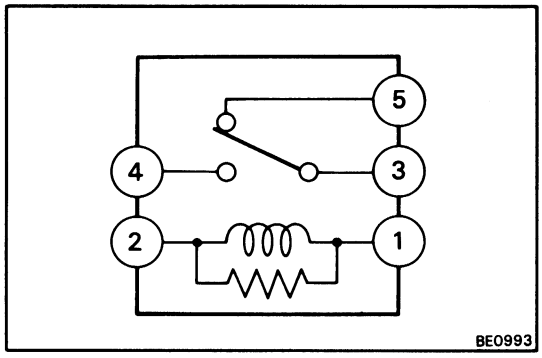

2. INSPECT ENGINE MAIN RELAY

NOTE: The relay is located in the No. 2 junction block of the engine compartment.

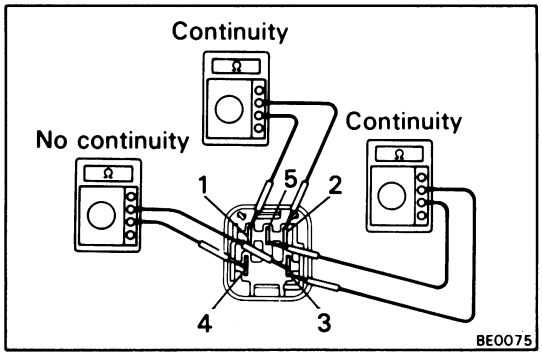

Inspect Relay Continuity

(a) Using an ohmmeter, check that there is continuity between terminals 1 and 2.

(b) Check that there is continuity between terminals 3 and 5.

(c) Check that there is no continuity between terminals 3 and 4.

If continuity is not as specified, replace the relay.

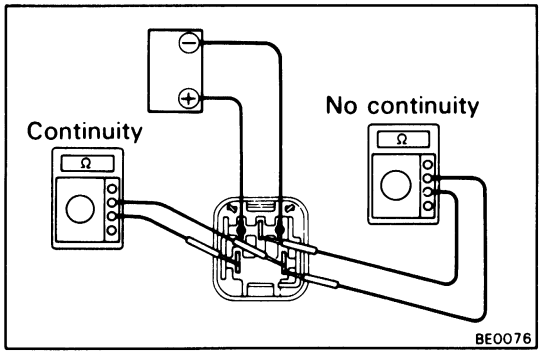

Inspect Relay Operation

(a) Apply battery voltage across terminals 1 and 2.

(b) Using an ohmmeter, check that there is continuity between terminals 3 and 4.

(c) Check that there is no continuity between terminals 3 and 5.

If operation is not as described, replace the relay.

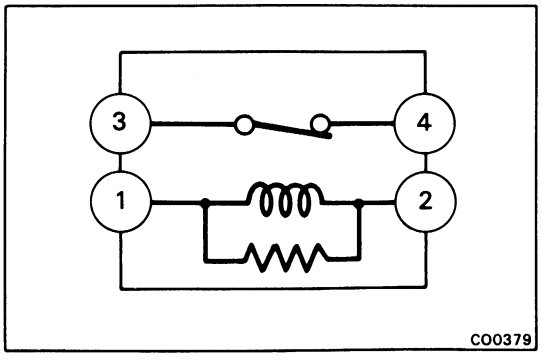

3. INSPECT VENT FAN RELAY

NOTE: The relay located in the No. 2 junction block of the engine compartment.

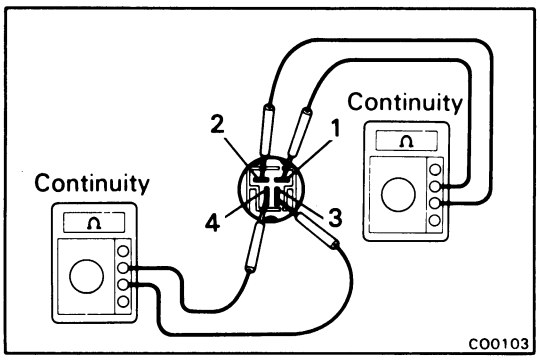

Inspect Relay Continuity

(a) Using an Ohmmeter, check that there is continuity between terminals 1 and 2.

(b) Check that there is continuity between terminals 3 and 4.

If continuity is not as specified, replace the relay.

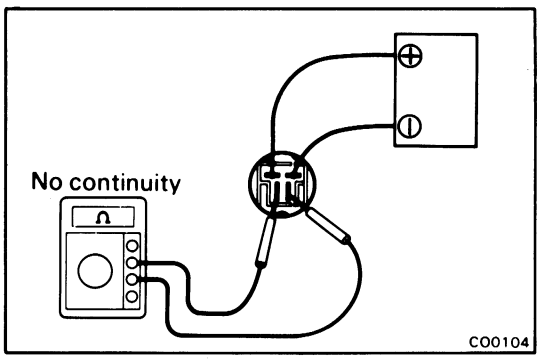

Inspect Relay Operation

(a) Apply battery voltage across terminals 1 and 2.

(b) Check that there is no continuity between terminals 3 and 4.

If operation is not as described, replace the relay.

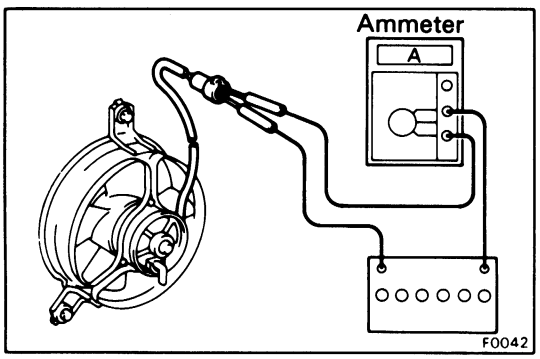

4. INSPECT FAN MOTOR

(a) Connect the battery and ammeter to the fan motor connector.

(b) Check to see that the motor rotates smoothly, and current is as follows:

Current: 1.5 – 2.7 A

REMOVAL OF ELECTRIC COOLING FAN

1. **DISCONNECT CONNECTOR OF FAN MOTOR**
2. **REMOVE ELECTRIC COOLING FAN**
   Remove the three bolts, spacers and cooling fan.

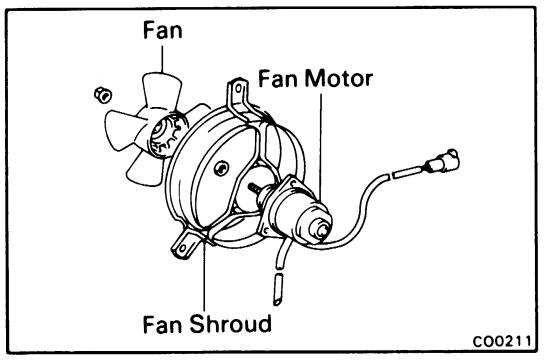

DISASSEMBLY OF ELECTRIC COOLING FAN

(See page CO-17)

1. **REMOVE FAN**
   Remove the nut and fan.
2. **REMOVE FAN MOTOR**
   Remove the three screws and fan motor.

ASSEMBLY OF ELECTRIC COOLING FAN

(See page CO-17)

1. **INSTALL FAN MOTOR**
   Install the fan motor with the three screws.
2. **INSTALL FAN**
   Install the fan with nut.

INSTALLATION OF ELECTRIC COOLING FAN

1. **INSTALL ELECTRIC COOLING FAN**
   Install the cooling fan with the three bolts and spacers.
2. **CONNECT CONNECTOR OF FAN MOTOR**

LUBRICATION SYSTEM

	Page
TROUBLESHOOTING	LU-2
OIL PRESSURE CHECK	LU-2
REPLACEMENT OF ENGINE OIL AND OIL FILTER	LU-3
OIL PUMP	LU-5
OIL COOLER AND PRESSURE REGULATOR	LU-13

TROUBLESHOOTING

Problem	Possible cause	Remedy	Page
Oil leakage	Cylinder head, cylinder block or oil pump body damaged or cracked	Repair as necessary	
	Oil seal faulty	Replace oil seal	LU-9 or EM-94
	Gasket faulty	Replace gasket	
Low oil pressure	Oil leakage	Repair as necessary	
	Relief valve faulty	Repair relief valve	LU-7, 13
	Oil pump faulty	Repair oil pump	LU-5
	Poor quality engine oil	Replace engine oil	LU-3
	Crankshaft bearing faulty	Replace bearing	EM-66
	Connecting rod bearing faulty	Replace bearing	EM-66
	Oil filter clogged	Replace oil filter	LU-4
High oil pressure	Relief valve faulty	Repair relief valve	LU-7, 13

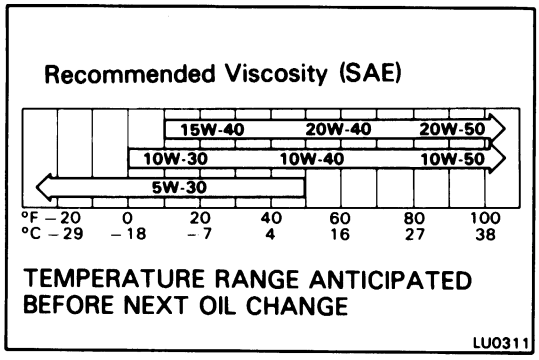

OIL PRESSURE CHECK

1. CHECK ENGINE OIL QUALITY

Check the oil for deterioration, entry of water, discoloring or thinning.
If the quality is poor, replace the oil.
Use API grade SF or SF/CC, fuel-efficient and recommended viscosity oil.

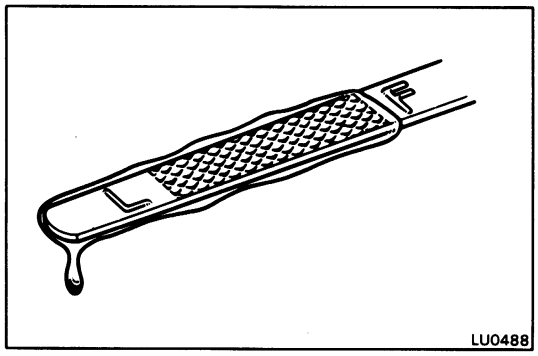

2. CHECK ENGINE OIL LEVEL

The oil level should be between the "L" and "F" marks on the dipstick.
If low, check the for leakage and add oil up to "F" mark.

3. (4A-GZE)
REMOVE ALTERNATOR
(See page CH-7)

4. (4A-GZE)
REMOVE ALTERNATOR BRACKET
(See page EM-60)

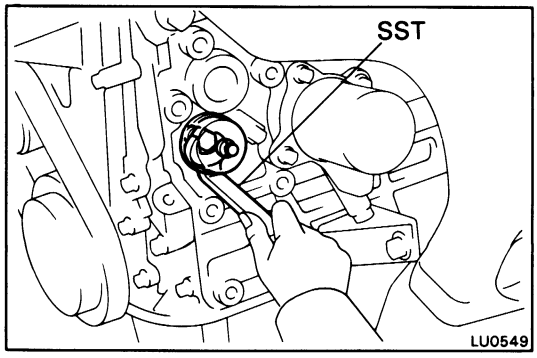

5. REMOVE OIL PRESSURE SENDER GAUGE

Using SST, remove the oil pressure sender gauge.
SST 09027-12140

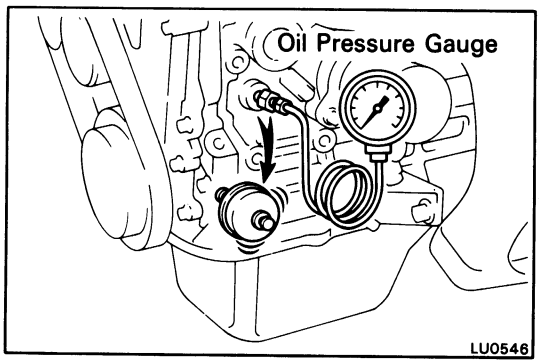

6. INSTALL OIL PRESSURE GAUGE

7. START ENGINE

Start the engine and warm it up to normal operating temperature.

8. CHECK OIL PRESSURE

Oil pressure:

At idling	**0.3 kg/cm² (4.3 psi, 29 kPa) or more**
At 3,000 rpm	**2.5 – 5.0 kg/cm² (36 – 71 psi, 245 – 490 kPa)**

NOTE: Check for oil leakage after reinstalling the oil pressure sender gauge.

9. REINSTALL OIL PRESSURE SENDER GAUGE

10. (4A-GZE)
INSTALL ALTERNATOR BRACKET
(See page EM-61)

11. (4A-GZE)
INSTALL ALTERNATOR
(See page CH-15)

REPLACEMENT OF ENGINE OIL AND OIL FILTER

CAUTION:

- **Prolonged and repeated contact with mineral oil will result in the removal of natural fats from the skin, leading to dryness, irritation and dermatitis. In addition, used engine oil contains potentially harmful contaminants which may cause skin cancer.**
  Adequate means of skin protection and washing facilities should be provided.
- **Care should be taken, therefore, when changing engine oil, to minimize the frequency and length of time your skin is exposed to used engine oil.**
  Protective clothing and gloves, that cannot be penetrated by oil, should be worn. The skin should be thoroughly washed with soap and water, or use water less hand cleaner, to remove any used engine oil. Do not use gasoline, thinners, or solvents.
- **In order to preserve the enviroment, used oil must be disposed of only at designated disposal sites.**

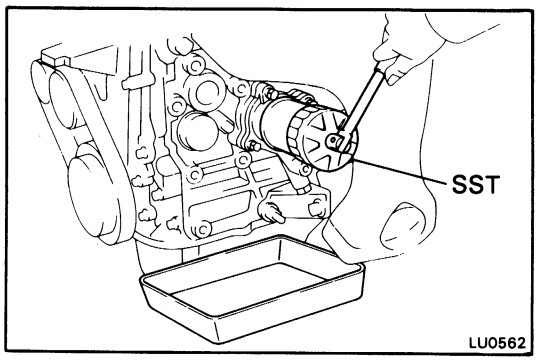

1. DRAIN ENGINE OIL

(a) Remove the oil filler cap.

(b) Remove the oil drain plug, and drain the oil into a container.

2. REPLACE OIL FILTER

(a) Using SST, remove the oil filter.

SST 09228-06500

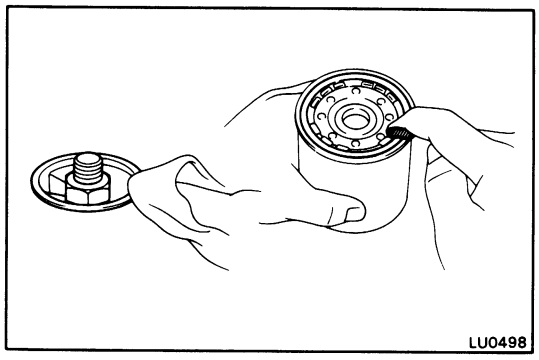

(b) Clean and check the oil filter installation surface.

(c) Apply clean engine oil to the gasket of a new oil filter.

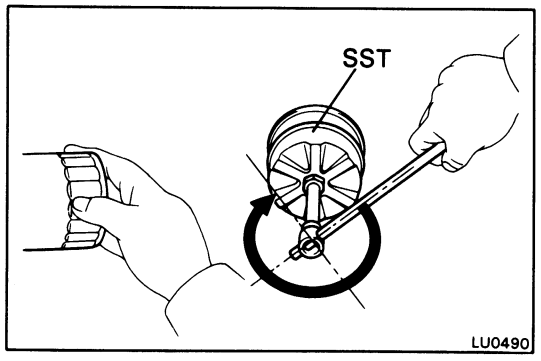

(d) Lightly screw in the oil filter by hand to where you feel resistance.

(e) Using SST, tighten it another 3/4 turn.

SST 09228-06500

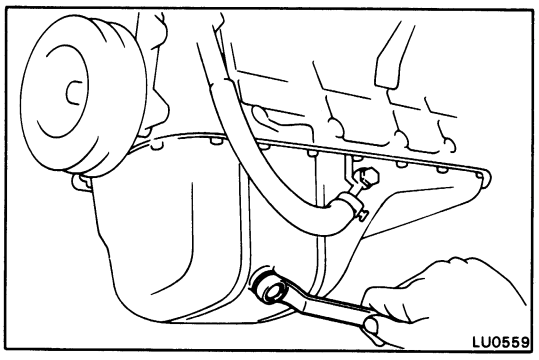

3. FILL WITH ENGINE OIL

(a) Clean and install the oil drain plug with a new gasket.

Torque: 250 kg-cm (18 ft-lb, 25 N·m)

(b) Fill the engine with new oil, API grade SF or SF/CC, multigrade, viscosity and fuel-efficient oil.

Capacity (w/o Oil cooler):
Drain and refill
w/o Oil filter change
3.0 liters (3.2 US qts, 2.6 Imp. qts)
w/ Oil filter change
3.3 liters (3.5 US qts, 2.9 Imp. qts)
Dry fill 3.7 liters (3.9 US qts, 3.3 Imp. qts)

Capacity (w/ Oil cooler):
Drain and refill
w/o Oil filter change
3.1 liters (3.3 US qts, 2.7 Imp. qts)
w/ Oil filter change
3.4 liters (3.6 US qts, 3.0 Imp. qts)
Dry fill 3.8 liters (4.0 US qts, 3.3 Imp. qts)

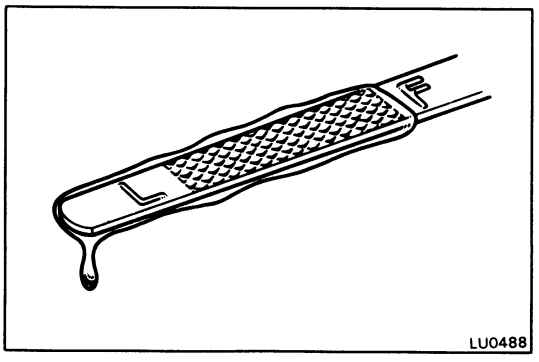

4. START ENGINE AND CHECK FOR LEAKS

5. RECHECK ENGINE OIL LEVEL (See page LU-2)

OIL PUMP

COMPONENTS

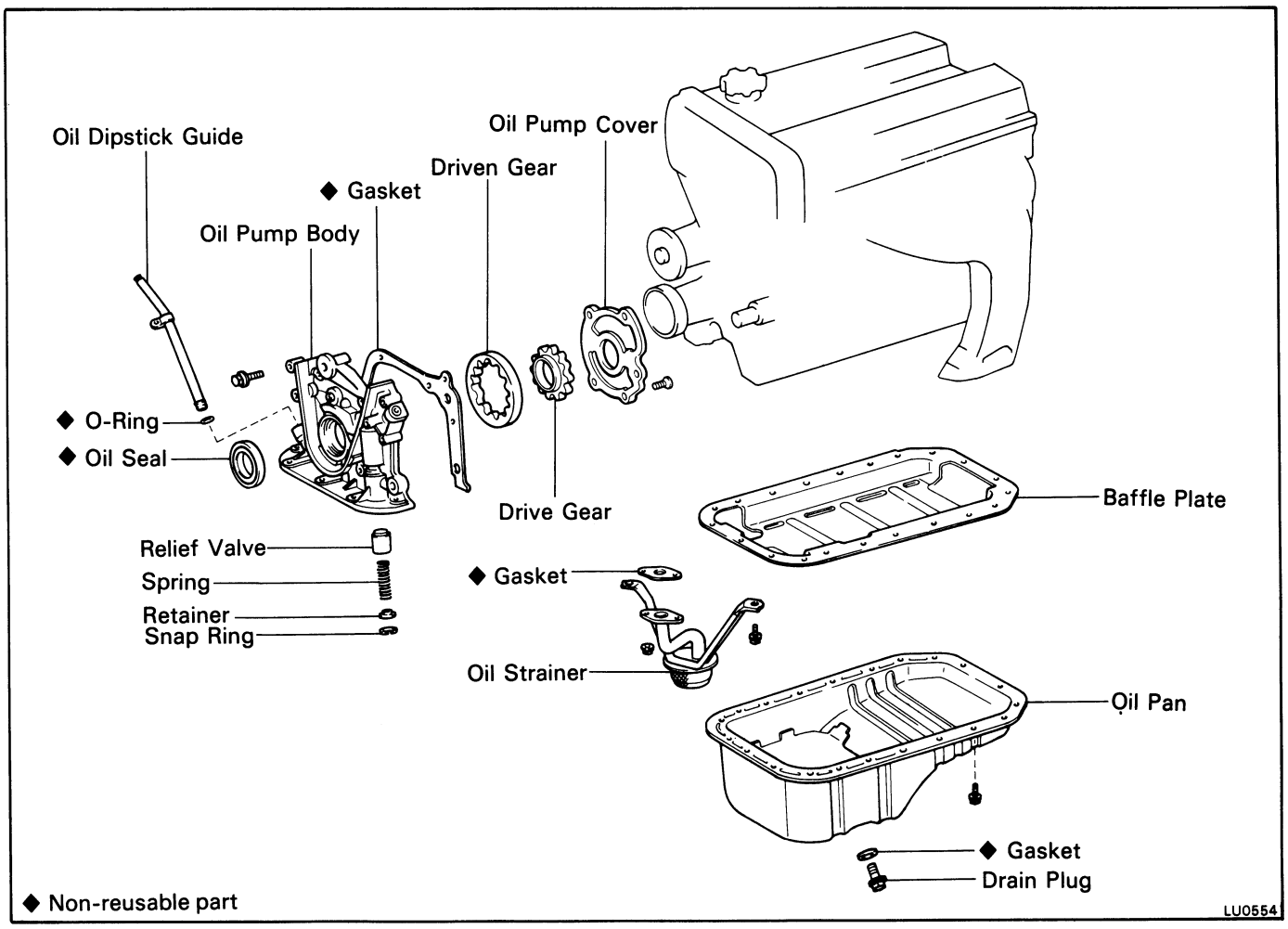

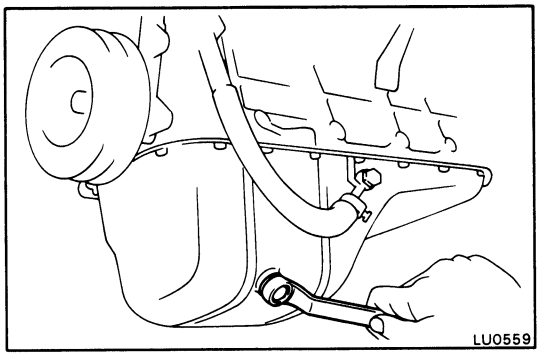

REMOVAL OF OIL PUMP

NOTE: When repairing the oil pump, the oil pan and strainer should be removed and cleaned.

1. **RAISE VEHICLE**

   CAUTION: Be sure the vehicle is securely supported.

2. **DRAIN ENGINE OIL (See page LU-4)**

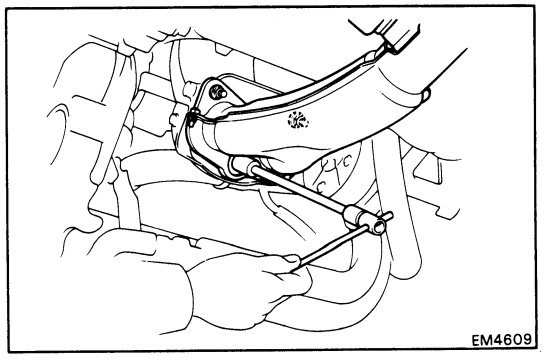

3. **REMOVE FRONT EXHAUST PIPE**

   (a) Disconnect the oxygen sensor connector.

   (b) Remove the three nuts holding the exhaust manifold to exhaust manifold pipe.

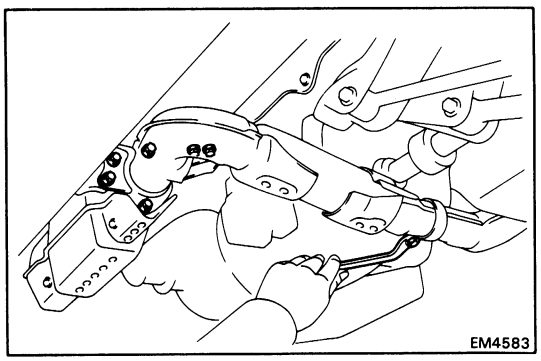

(c) Remove the four bolts, two nuts and exhaust manifold pipe.

4. (w/ Oil cooler)
DISCONNECT OIL COOLER HOSE

5. REMOVE TIMING BELT, IDLER PULLEY AND CRANKSHAFT TIMING PULLEY
(See steps 1 to 14 on pages EM-15 to 18)

6. INSTALL RH ENGINE MOUNTING

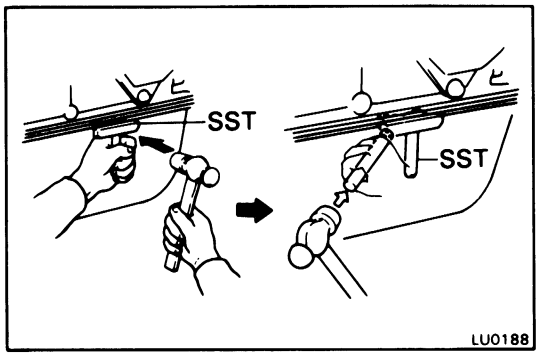

7. REMOVE OIL PAN

(a) Remove the nineteen bolts and two nuts.

(b) Insert the blade of SST between the baffle plate and oil pan, cut off applied sealer and remove the oil pan.

SST 09032-00100

CAUTION: Be careful not to damage the oil pan flange.

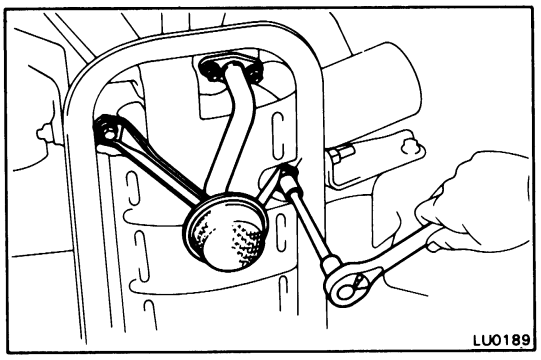

8. REMOVE OIL STRAINER

Remove the two bolts, two nuts, oil strainer and gasket.

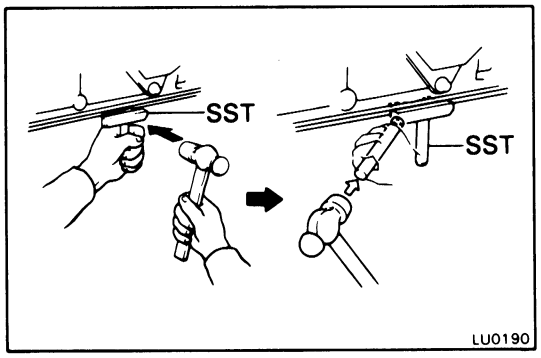

9. REMOVE OIL PAN BAFFLE PLATE

Insert the blade of SST between the cylinder block and baffle plate, cut off applied sealer and remove the baffle plate.

SST 09032-00100

CAUTION:
- **Do not use SST for the oil pump body side and rear oil seal retainer.**
- **Be careful not to damage the baffle plate flange.**

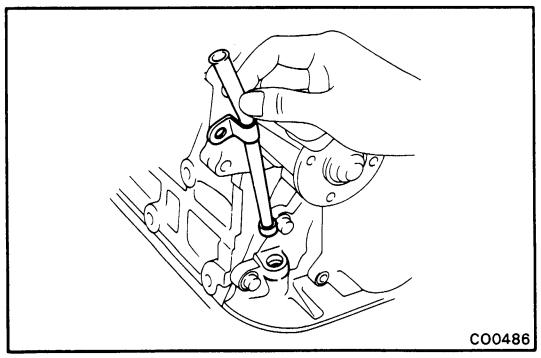

10. REMOVE OIL DIPSTICK AND GUIDE

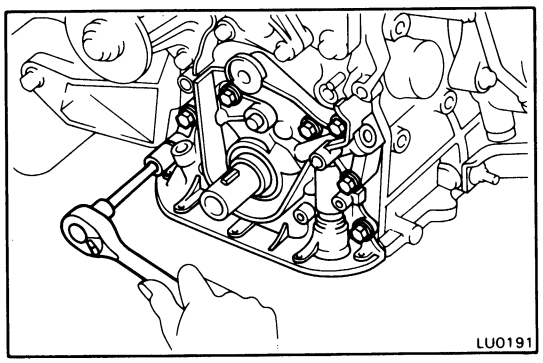

11. REMOVE OIL PUMP

(a) Remove the seven bolts.

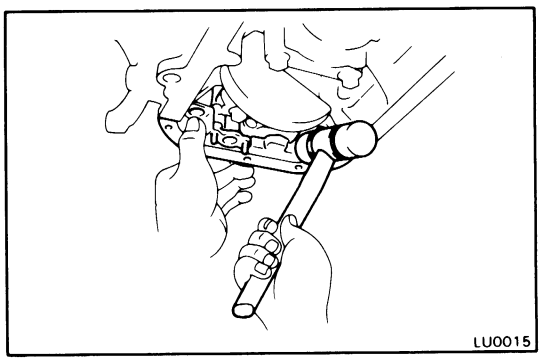

(b) Using a plastic-faced hammer, careful tap off the oil pump.

DISASSEMBLY OF OIL PUMP

(See page LU-5)

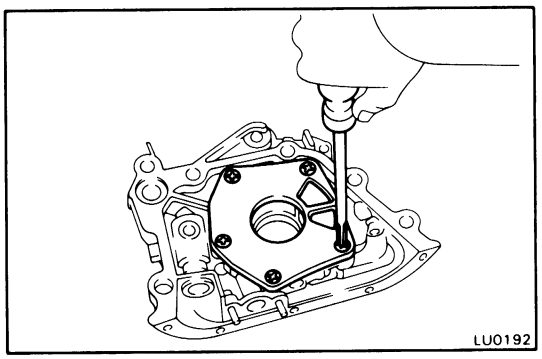

1. REMOVE DRIVE AND DRIVEN GEARS

(a) Remove the five screws and oil pump body cover.

(b) Remove the drive and driven gears.

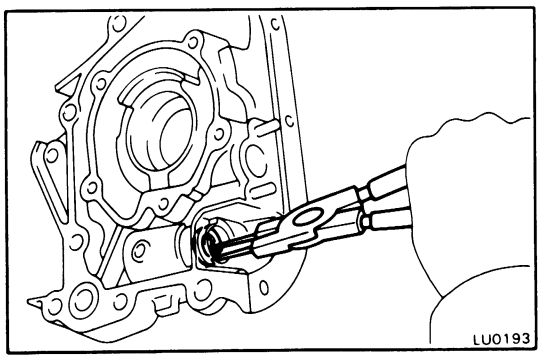

2. REMOVE RELIEF VALVE

(a) Using snap ring pliers, remove the snap ring.

(b) Remove the retainer, spring and relief valve.

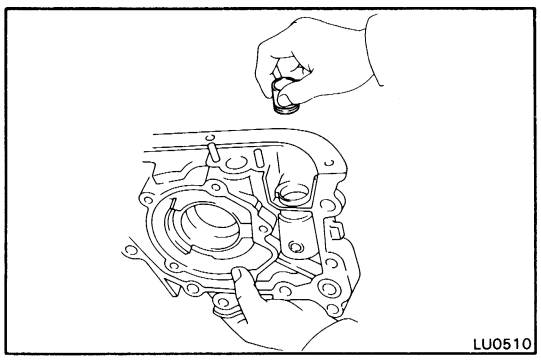

INSPECTION OF OIL OIL PUMP

1. INSPECT RELIEF VALVE

Coat the relief valve with engine oil and check that it falls smoothly into the valve hole by its own weight.

If it is not, replace the relief valve. If necessary, replace the oil pump assembly.

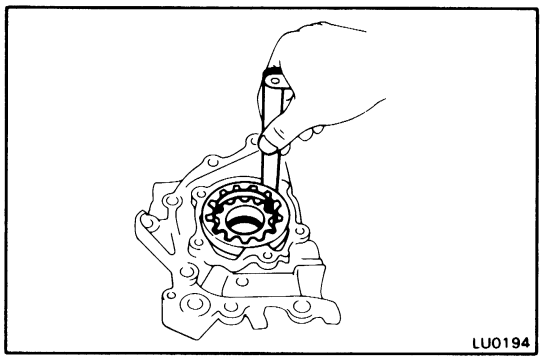

2. INSPECT DRIVE AND DRIVEN GEARS

A. Inspect gear body clearance

Using a thickness gauge, measure the clearance between the driven gear and pump body.

Standard body clearance: 0.100 – 0.191 mm (0.0039 – 0.0075 in.)
Maximum body clearance: 0.20 mm (0.0079 in.)

If the body clearance is greater than maximum, replace the gears as a set. If necessary, replace the oil pump body.

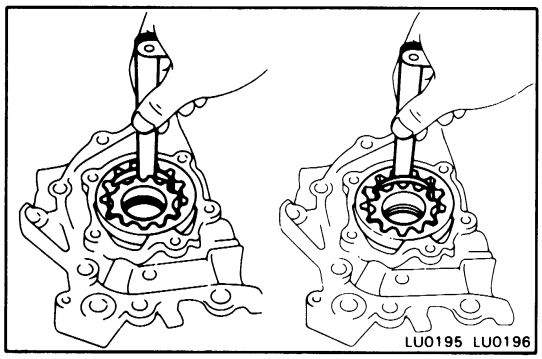

B. Inspect gear tip clearance

Using a thickness gauge, measure the clearance between each gears and the crescent.

Standard tip clearance:
Drive gear to crescent 0.107 – 0.248 mm (0.0042 – 0.0098 in.)
Driven gear to crescent 0.055 – 0.306 mm (0.0022 – 0.0120 in.)
Maximum tip clearance: 0.35 mm (0.0138 in.)

If the tip clearance is greater than maximum, replace the gears as a set. If necessary, replace the oil pump body.

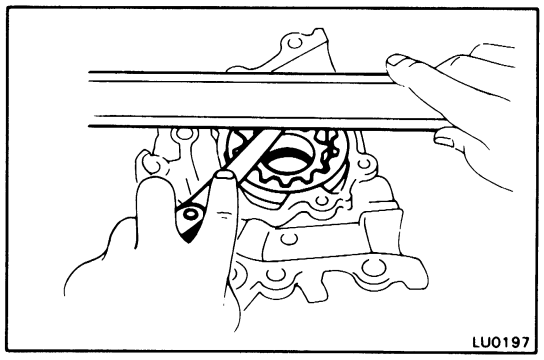

C. Inspect gear side clearance

Using a precision straight edge and thickness gauge, measure the clearance as shown.

Standard side clearance: 0.025 – 0.075 mm (0.0010 – 0.0030 in.)
Maximum side clearance: 0.10 mm (0.0039 in.)

If the side clearance is greater than maximum, replace the gears as a set. If necessary, replace the oil pump body.

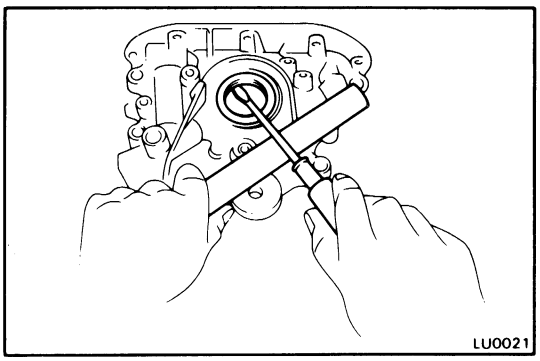

REPLACEMENT OF OIL SEAL

1. REMOVE OIL SEAL

Using a screwdriver, pry out the oil seal.

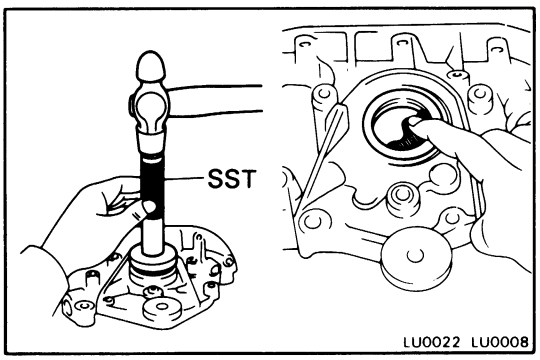

2. INSTALL OIL SEAL

(a) Using SST and a hammer, tap in a new oil seal.

SST 09517-30010

CAUTION: Be careful not to install a new oil seal slantwise.

(b) Apply MP grease to the oil seal lip.

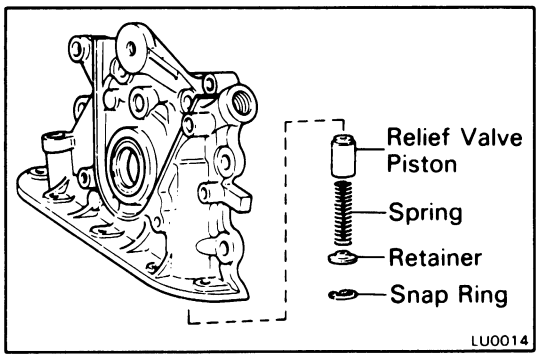

ASSEMBLY OF OIL PUMP

(See page LU-5)

1. INSTALL RELIEF VALVE

(a) Insert the relief valve, spring and retainer into the pump body hole.

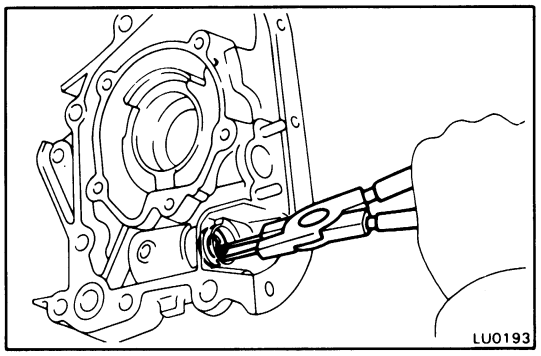

(b) Using snap ring pliers, install the snap ring.

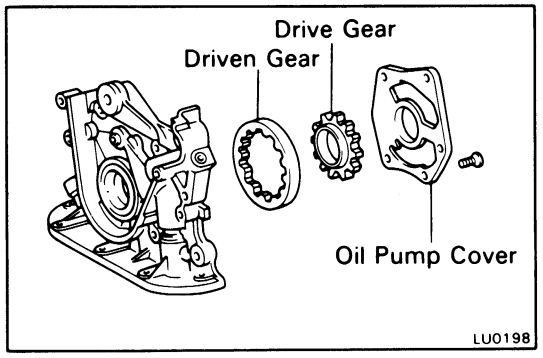

2. INSTALL DRIVE AND DRIVEN GEARS

(a) Insert the drive and driven gears into the pump body.

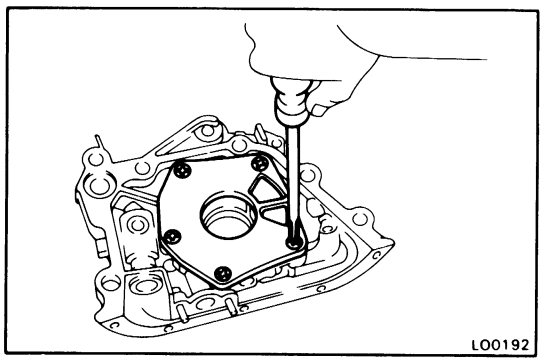

(b) Install the pump body cover with the five screws.

Torque: 105 kg-cm (8 ft-lb, 10 N·m)

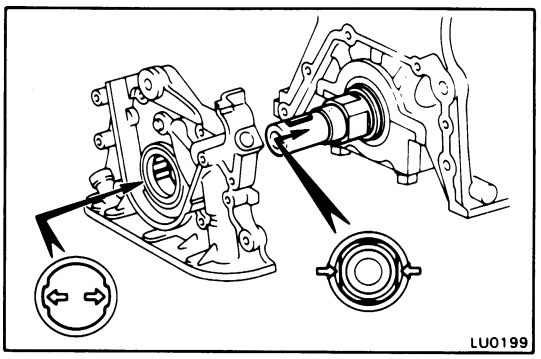

INSTALLATION OF OIL PUMP

(See page LU-5)

1. INSTALL OIL PUMP

(a) Install a new gasket to cylinder block.

(b) Install the oil pump to the crankshaft with the spline teeth of the drive gear engaged with the large teeth of the crankshaft.

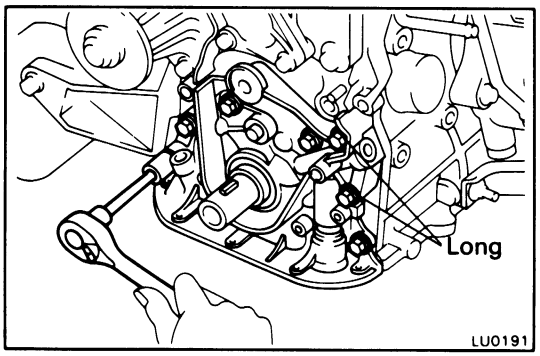

(c) Install and torque the seven bolts.

Torque: 218 kg-cm (16 ft-lb, 21 N·m)

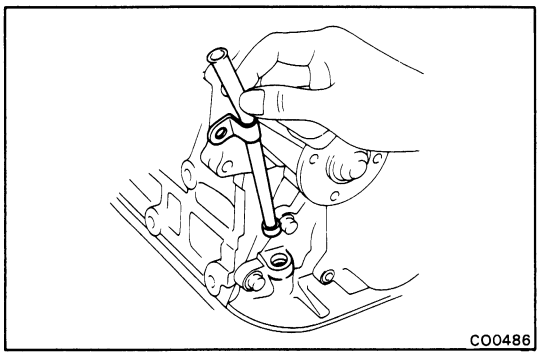

2. INSTALL OIL DIPSTICK GUIDE AND DIPSTICK

(a) Lightly coat a new O-ring with engine oil.

(b) Install the new O-ring to the oil dipstick guide.

(c) Push in the oil dipstick guide and install the mount bolt.

(d) Insert the oil dipstick.

3. INSTALL OIL PAN BAFFLE PLATE

(a) Remove any old packing (FIPG) material and be careful not to drop any oil on the contact surfaces of the oil pan and cylinder block.

- Using a razor blade and gasket scraper, remove all the old packing (FIPG) material from the gasket surfaces and sealing groove.
- Thoroughly clean all components to remove all the loose material.

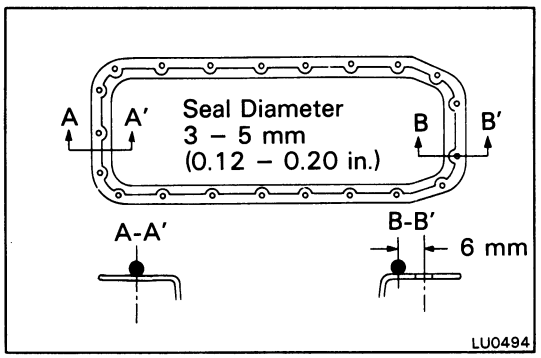

- Using a non-residue solvent, clean both sealing surfaces.

CAUTION: Do not use a solvent which will affect the painted surfaces.

(b) Apply seal packing to the baffle plate as shown in the figure.

Seal packing: Part No.08826-00080 or equivalent

- Install a nozzle that has been cut to a 5 mm (0.20 in.) opening.
- Parts must be assembled within 3 minutes of application. Otherwise the material must be removed and reapplied.
- Immediately remove nozzle from the tube, and reinstall cap.

(c) Install the baffle plate.

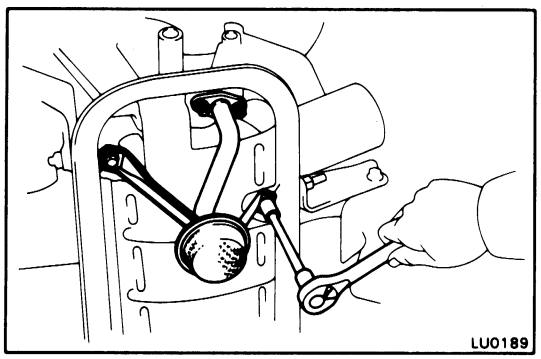

5. INSTALL OIL STRAINER

Install a new gasket and the oil strainer with the two bolts and two nuts.

Torque: 95 kg-cm (82 in.-lb, 9.3 N·m)

6. INSTALL OIL PAN

(a) Remove any old packing (FIPG) material and be careful not to drop any oil on the contact surfaces of the oil pan and baffle plate.

- Using a razor blade and gasket scraper, remove all the old packing (FIPG) material from the gasket surfaces and sealing groove.
- Thoroughly clean all components to remove all the loose material.
- Using a non-residue solvent, clean both sealing surfaces.

CAUTION: Do not use a solvent which will affect the painted surfaces.

(b) Apply seal packing to the oil pan as shown in the figure.

Seal packing: Part No.08826-00080 or equivalent

- Install a nozzle that has been cut to a 5 mm (0.20 in.) opening.

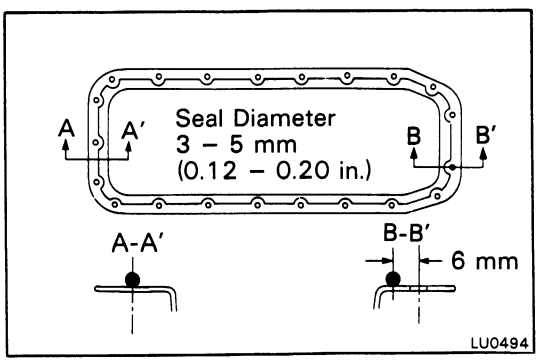

NOTE: Avoid applying an excess amount to the surface. Be particularly careful near oil passages.

- Parts must be assembled within 3 minutes of application. Otherwise the material must be removed and reapplied.
- Immediately remove nozzle from the tube, and reinstall cap.

(c) Install the oil pan with the nineteen bolts and two nuts.

Torque: 50 kg-cm (43 in.-lb, 4.9 N·m)

7. SUPPORT ENGINE AT OIL PAN

8. REMOVE RH ENGINE MOUNTING

9. INSTALL CRANKSHAFT TIMING PULLEY, IDLER PULLEY AND TIMING BELT
(See steps 10 to 24 on pages EM-22 to 25)

10. (w/ Oil cooler)
CONNECT OIL COOLER HOSE

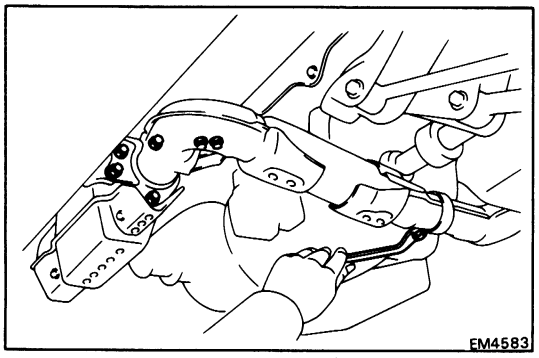

11. INSTALL FRONT EXHAUST PIPE

(a) Install a new gasket and the exhaust pipe with the four bolts and two nuts.

Torque:
Pipe to Catalytic converter
440 kg-cm (32 ft-lb, 43 N·m)

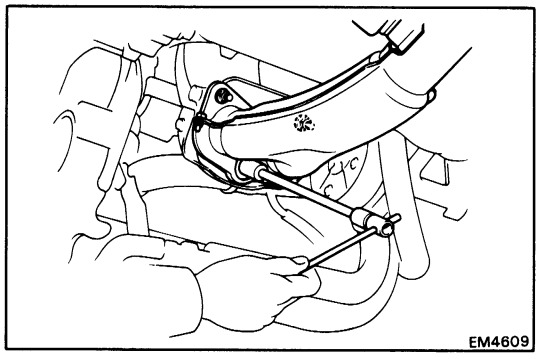

(b) Install two new gaskets and the exhaust pipe with three new nuts to the exhaust manifold. Torque the nuts.

Torque: 630 kg-cm (46 ft-lb, 62 N·m)

(c) Connect the oxygen sensor connector.

12. LOWER VEHICLE

13. FILL WITH ENGINE OIL (See page LU-4)

14. START ENGINE AND CHECK FOR LEAKS

15. RECHECK ENGINE OIL LEVEL (See page LU-2)

OIL COOLER AND PRESSURE REGULATOR

COMPONENTS

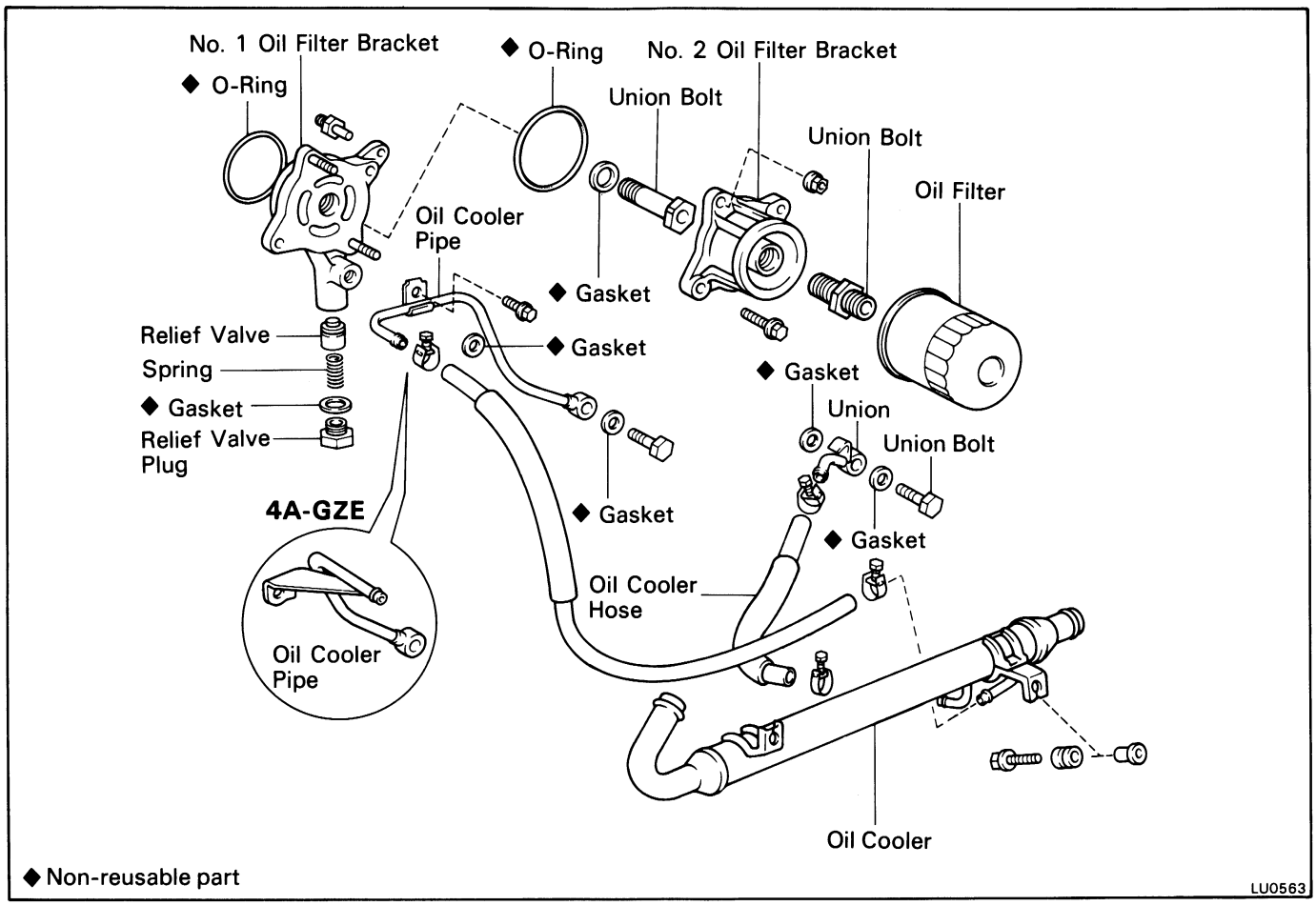

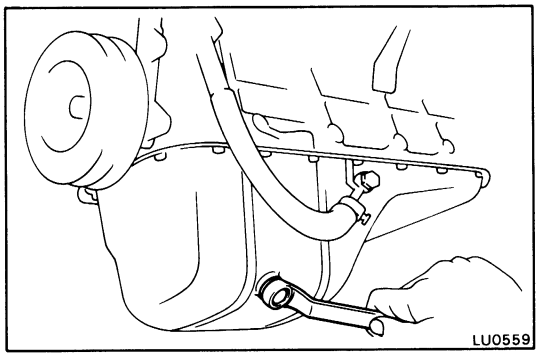

REMOVAL AND DISASSEMBLY OF PRESSURE REGULATOR (RELIEF VALVE)

1. **DRAIN ENGINE OIL (See page LU-4)**

2. **DRAIN ENGINE COOLANT (See page CO-3)**

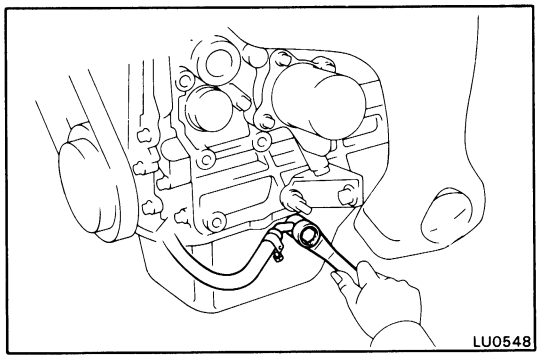

3. **DISCONNECT OIL COOLER PIPES**

   (a) Remove the union bolt, two gaskets oil cooler pipe.

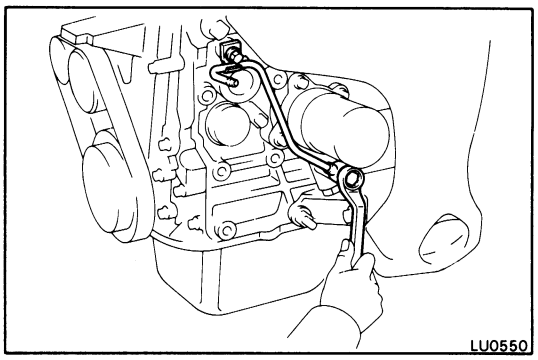

(b) Remove the bolt, union bolt, cooler pipe and two gaskets.

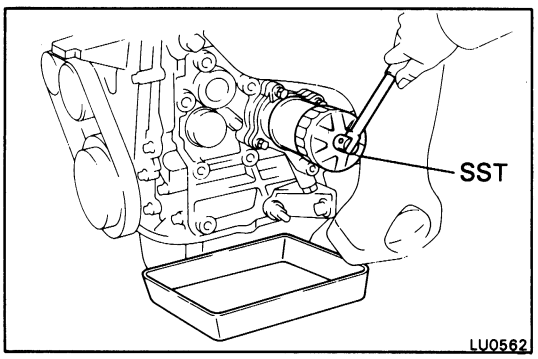

4. REMOVE OIL FILTER

Using SST, remove the oil filter.

SST 09228-06500

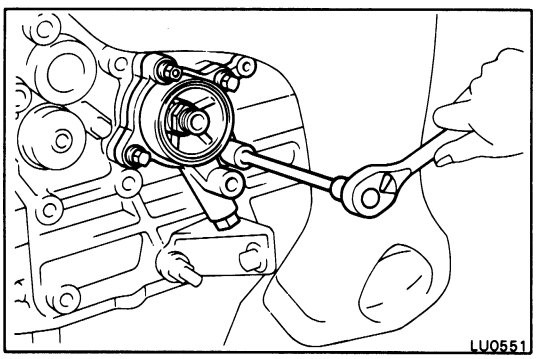

5. REMOVE NO.2 OIL FILTER BRACKET

Remove the two bolts, two nuts, No.2 oil filter bracket and O-ring.

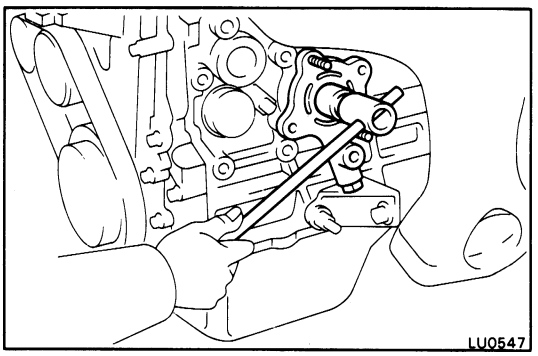

6. REMOVE NO.1 OIL FILTER BRACKET

Remove the union bolt, gasket, gasket, No.1 oil filter bracket and O-ring.

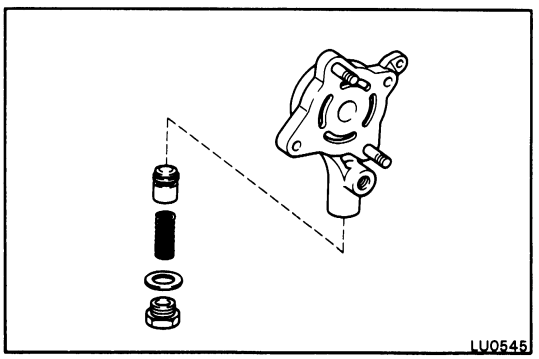

7. REMOVE RELIEF VALVE

Remove the plug, gasket, spring and relief valve.

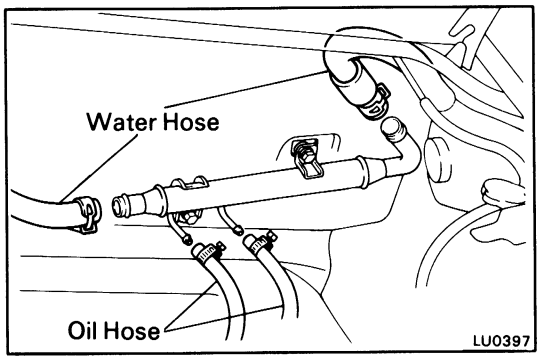

8. REMOVE OIL COOLER

(a) Remove the clamps and disconnect the two water hoses and two oil cooler hoses.

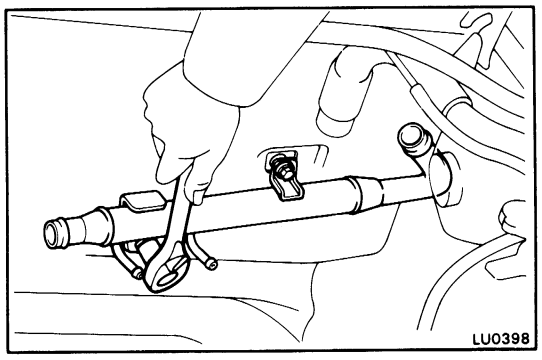

(b) Remove the two bolts, insulator and oil cooler.

INSPECTION OF OIL COOLER AND PRESSURE REGULATOR (RELIEF VALVE)

1. INSPECT OIL COOLER

Check the oil cooler for damage or clogging.

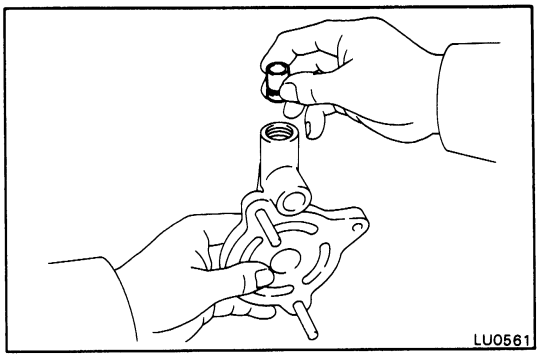

2. INSPECT RELIEF VALVE

Coat the relief valve with engine oil, and check that it falls smoothly into the valve hole by its own weight.

If it does not, replace the relief valve. If necessary, replace the No.1 oil filter bracket.

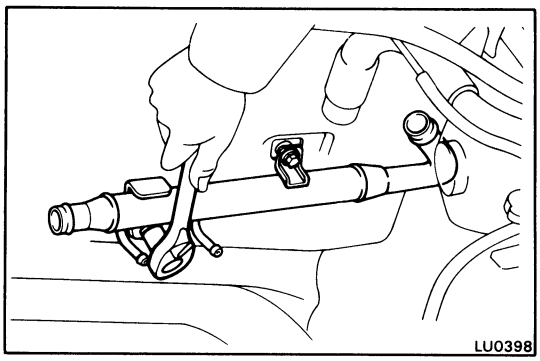

ASSEMBLY AND INSTALLATION OF PRESSURE REGULATOR (RELIEF VALVE)

(See page LU-13)

1. INSTALL OIL COOLER

(a) Install the oil cooler with the two insulators and bolts.

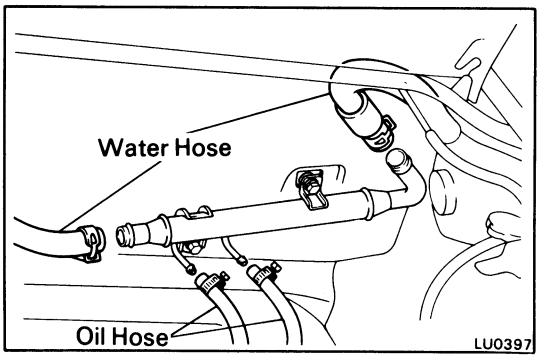

(b) Connect the two oil hoses and water hoses, and install the clamps.

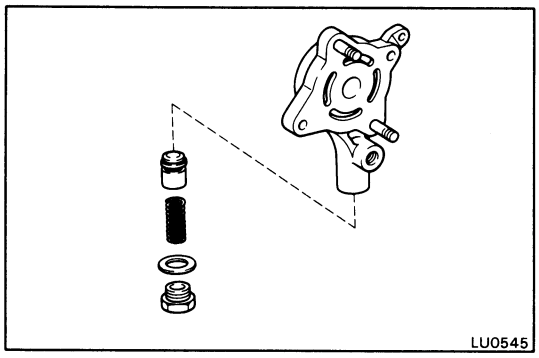

2. INSTALL RELIEF VALVE

Insert the relief valve, spring, a new gasket and screw on the relief valve plug. Torque the plug.

Torque: 375 kg-cm (27 ft-lb, 37 N·m)

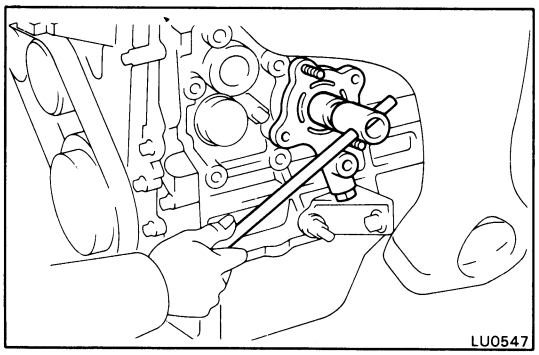

3. INSTALL NO.1 OIL FILTER BRACKET

Install a new O-ring and the No.1 oil filter bracket with a new gasket and the union bolt. Torque the union bolt.

Torque: 450 kg-cm (33 ft-lb, 44 N·m)

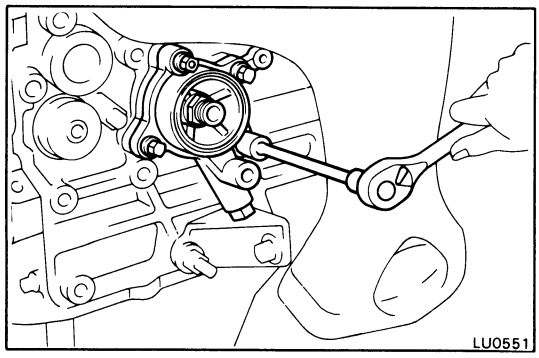

4. INSTALL NO.2 OIL FILTER BRACKET

Install a new O-ring and the No.2 oil filter bracket with the two bolts and two nuts.

Torque: 200 kg-cm (14 ft-lb, 20 N·m)

5. INSTALL OIL FILTER (See page LU-4)

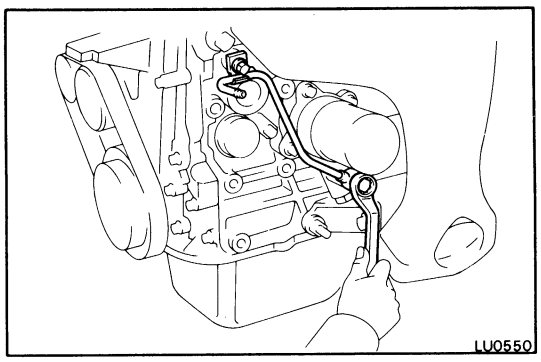

6. CONNECT OIL COOLER PIPES

(a) Install the cooler pipe with the bolt, new two gaskets and the union bolt. Torque the union bolt.

Torque: 300 kg-cm (22 ft-lb, 29 N·m)

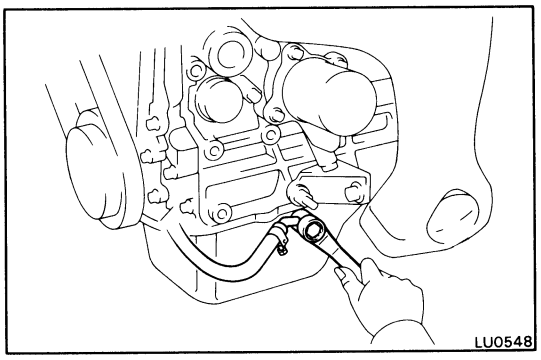

(b) Install the cooler pipe , two new gaskets and union bolt. Torque the union bolt.

Torque: 250 kg-cm (18 ft-lb, 25 N·m)

7. REFILL WITH ENGINE COOLANT
(See page CO-4)

8. REFILL WITH ENGINE OIL
(See step 3 on page LU-4)

9. START ENGINE AND CHECK FOR LEAKS

10. RECHECK ENGINE OIL LEVEL

Recheck the engine oil level and refill as necessary.

IGNITION SYSTEM

	Page
PRECAUTIONS	IG-2
TROUBLESHOOTING	IG-2
ELECTRONIC SPARK ADVANCE (ESA)	IG-3
ON-VEHICLE INSPECTION	IG-4
DISTRIBUTOR	IG-9

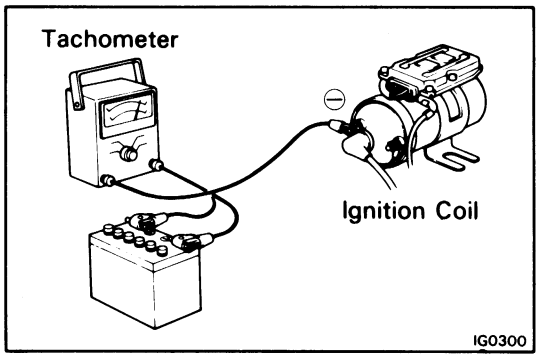

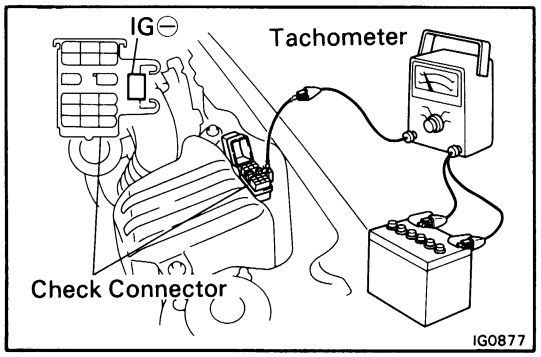

PRECAUTIONS

1. **Do not keep the ignition switch on for more than 10 minutes if the engine will not start.**
2. **There are two methods of connecting the tachometer:**
   - **To the ignition coil —**
     Connect the positive (+) terminal to the ignition coil negative (−) terminal.
   - **To the check connector —**
     Connect the tachometer test probe to the check connector terminal IG ⊖.
3. **As some tachometers are not compatible with this ignition system, we recommended that you confirm the compatibility of your unit before using.**
4. **NEVER allow the ignition coil terminals to touch ground as it could result in damage to the igniter and/ or ignition coil.**
5. **Do not disconnect the battery when the engine is running.**
6. **Make sure that the igniter is properly grounded to the body.**

TROUBLESHOOTING

Problem	Possible cause	Remedy	Page
Engine will not start/ hard to start (cranks ok)	Incorrect ignition timing	Reset timing	IG-10
	Ignition coil faulty	Inspect coil	IG-7
	Igniter faulty	Inspect igniter	IG-4
	Distributor	Inspect distributor	IG-7
	High tension cord faulty	Inspect high-tension cords	IG-5
	Spark plugs faulty	Inspect plugs	IG-5
	Ignition wiring disconnected or broken	Inspect wiring	
Rough idle or stalls	Spark plugs faulty	Inspect plugs	IG-5
	Ignition wiring faulty	Inspect wiring	
	Incorrect ignition timing	Reset timing	IG-10
	Ignition coil faulty	Inspect coil	IG-7
	Igniter faulty	Inspect igniter	IG-4
	Distributor	Inspect distributor	IG-7
	High tension cord faulty	Inspect high-tension cords	IG-5
Engine hesitates/ poor acceleration	Spark plugs faulty	Inspect plugs	IG-5
	Ignition wiring faulty	Inspect wiring	
	Incorrect ignition timing	Reset timing	IG-10
Engine dieseling (runs after ignition switch is turned off)	Incorrect ignition timing	Reset timing	IG-10
Muffler explosion (after fire) all the time	Incorrect ignition timing	Reset timing	IG-10
Engine backfires	Incorrect ignition timing	Reset timing	IG-10
Poor fuel economy	Spark plugs faulty	Inspect plugs	IG-5
	Incorrect ignition timing	Reset timing	IG-10
Engine overheats	Incorrect ignition timing	Reset timing	IG-10

ELECTRONIC SPARK ADVANCE (ESA)

The ECU is programmed with data for optimum ignition timing under any and all operating conditions. Using data provided by sensors which monitor various engine functions (rpm, intake air volume, engine temperature, etc.) the microcomputer (ECU) triggers the spark at precisely the right instant.

ESA SYSTEM CIRCUIT

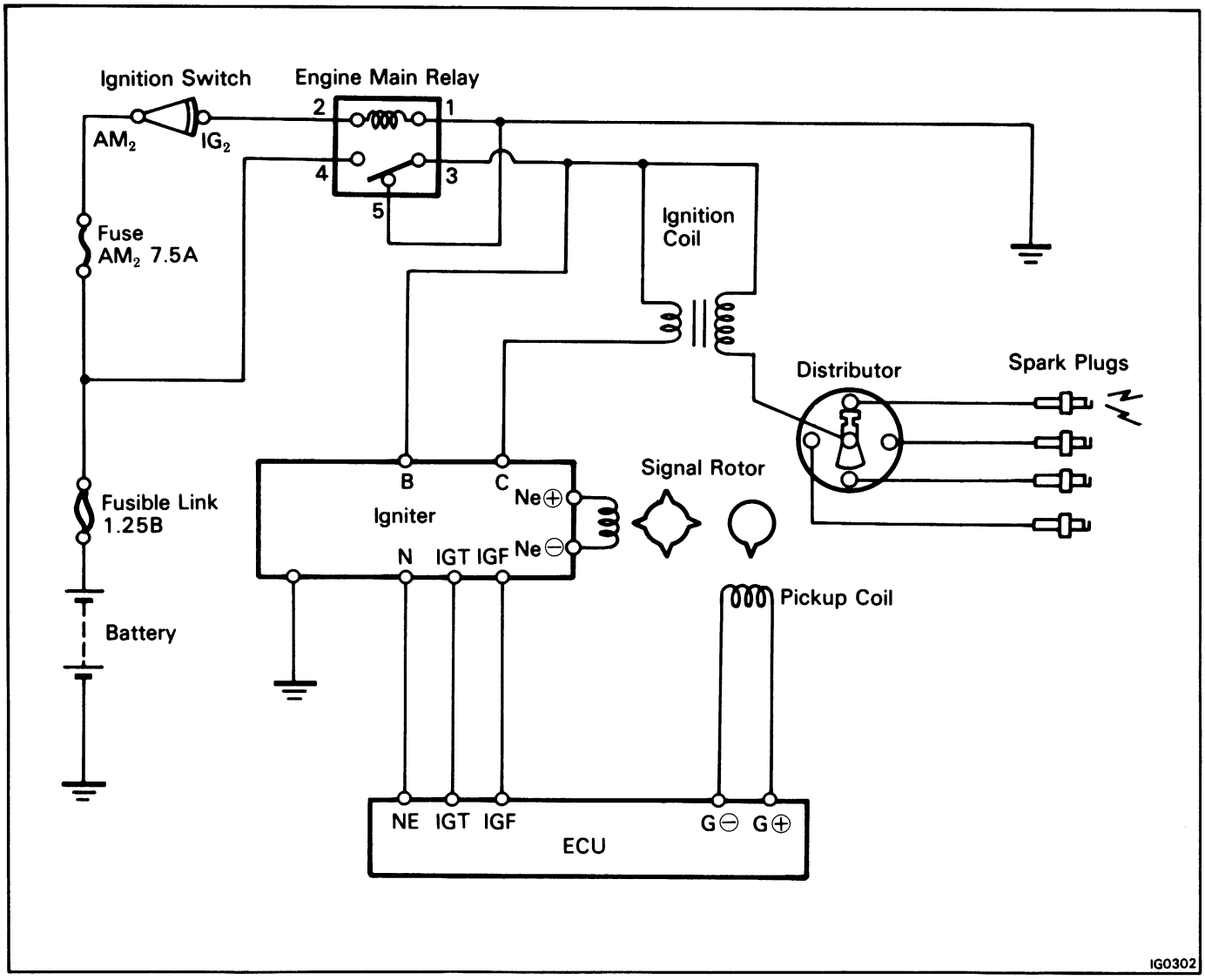

ON-VEHICLE INSPECTION

SPARK TEST

CHECK THAT SPARK OCCURS

(a) Disconnect high-tension cords from the distributor.

(b) Hold the end about 12.7 mm (0.500 in.) from body of car.

(c) See if spark occurs while engine is being cranked.

NOTE: To prevent gasoline from being injected from injectors during this test, crank the engine for no more than 1-2 seconds at a time.

If the spark does not occur, perform the test as follows.

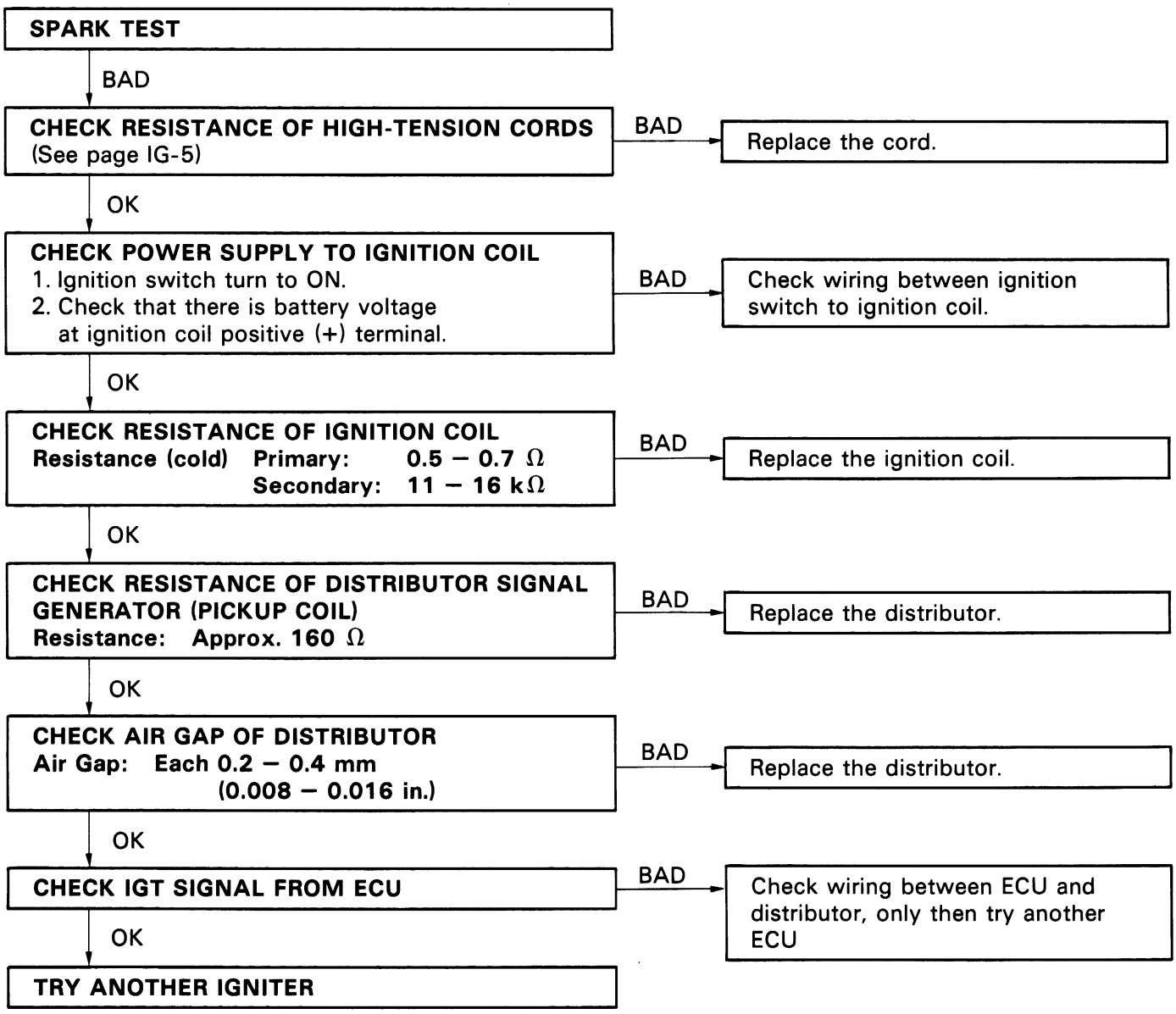

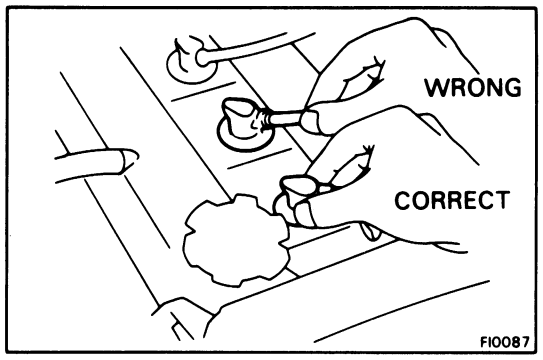

INSPECTION OF HIGH-TENSION CORD

1. **CAREFULLY REMOVE HIGH-TENSION CORDS BY THEIR RUBBER BOOTS**

   CAUTION: DO NOT pull on the cords or bend the wires. The conductor inside may be damaged.

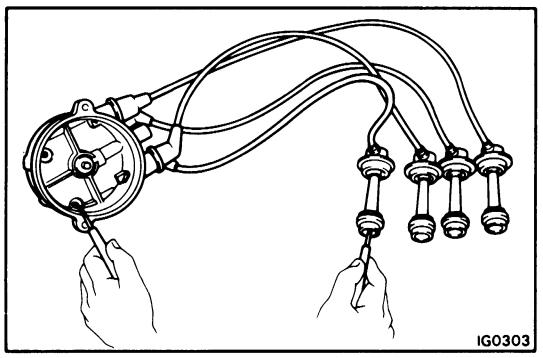

2. **INSPECT RESISTANCE OF HIGH-TENSION CORD AND DISTRIBUTOR CAP**

   Using an ohmmeter, check that the resistance does not exceed the maximum.

   Maximum resistance: 25 kΩ/cord

   If more than maximum, check the terminals, and replace the high-tension cord and/or distributor cap as required.

INSPECTION OF SPARK PLUG

(Platinum Tipped Spark Plug)

CAUTION:
- **Never use a wire brush for cleaning**
- **Never attempt to adjust gap on used plug**
- **Spark plugs should be replaced every 60,000 miles (100,000 km)**

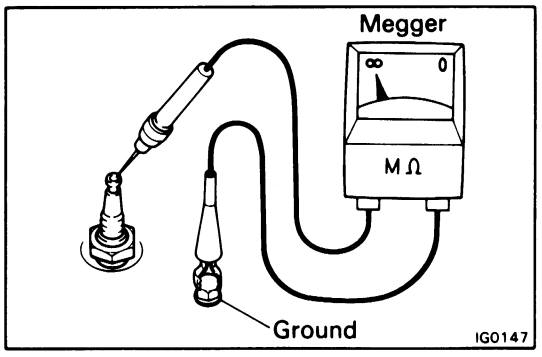

1. **INSPECT ELECTRODE**

   (a) If using a megger (insulation resistance meter): Measure the insulation resistance.

   Correct insulation resistance: More than 10 MΩ

   If less than 10 MΩ, proceed to step 2.

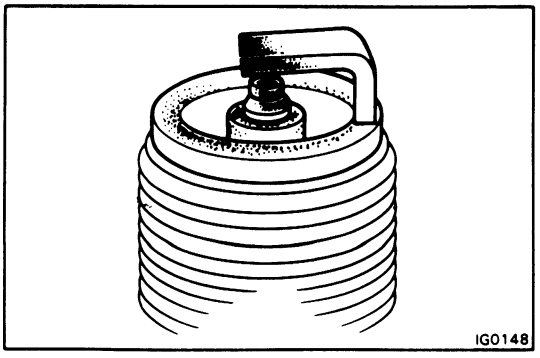

   (b) If not using a megger:

   Quickly race the engine to 4,000 rpm five times. Visually inspect the spark plugs.

   If the electrode is dry ..... Okay
   If the electrode is wet ..... Proceed to step 2.

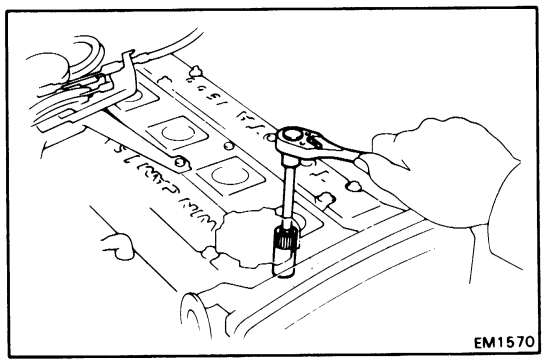

2. REMOVE SPARK PLUGS

Using a plug wrench (16 mm), remove the spark plugs.

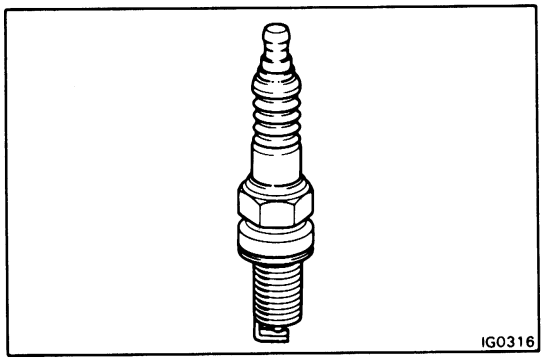

3. VISUALLY INSPECT SPARK PLUGS

Inspect the spark plugs for thread or insulator damage. If defective, replace the plug.

Recommended spark plugs:

4A-GE
- **ND PQ16R**
- **NGK BCPR5EP11**

4A-GZE
- **ND PQ20R**
- **NGK BCPR6EP11**

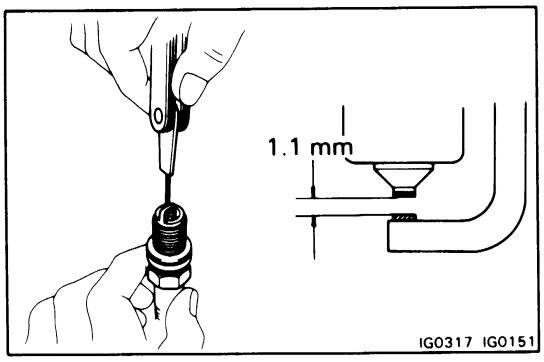

4. INSPECT ELECTRODE GAP

Maximum limit: 1.3 mm (0.051 in.)

If not, replace the plug.

Correct electrode gap of new plug:
1.1 mm (0.043 in.)

If adjusting the gap of a new plug, bend only the base of the ground electrode, do not touch the tip.

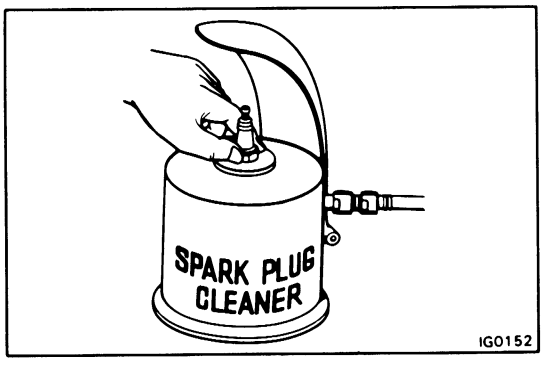

5. CLEAN SPARK PLUGS

If the electrode has traces of wet carbon, allow it to dry and then clean with a spark plug cleaner.

Air pressure: Below 6 kg/cm² (85 psi, 588 kPa)
Duration: 20 seconds or less

NOTE: If there are traces of oil, remove with gasoline before using the spark plug cleaner.

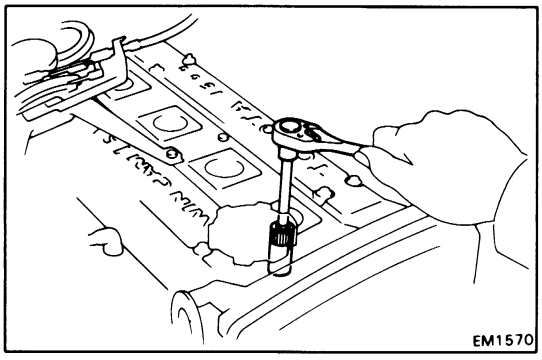

6. INSTALL SPARK PLUGS

Using a plug wrench (16 mm), install and torque the spark plugs.

Torque: 180 kg-cm (13 ft-lb, 18 N·m)

INSPECTION OF IGNITION COIL

1. DISCONNECT HIGH-TENSION CORDS FROM IGNITION COIL

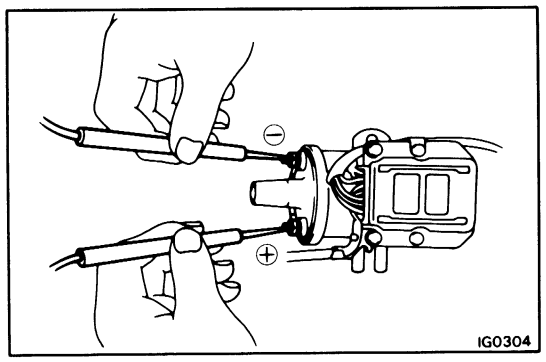

2. INSPECT PRIMARY COIL RESISTANCE

Using an ohmmeter, measure the resistance between the positive (+) and negative (−) terminals.

Primary coil resistance (cold): 0.5 − 0.7 Ω

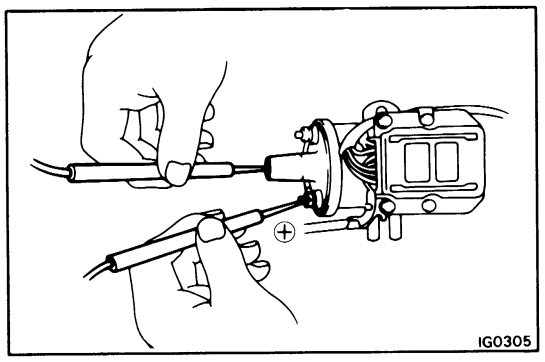

3. INSPECT SECONDARY COIL RESISTANCE

Using an ohmmeter, measure the resistance between the positive (+) terminal and high-tension terminal.

Secondary coil resistance (cold): 11 − 16 kΩ

INSPECTION OF DISTRIBUTOR

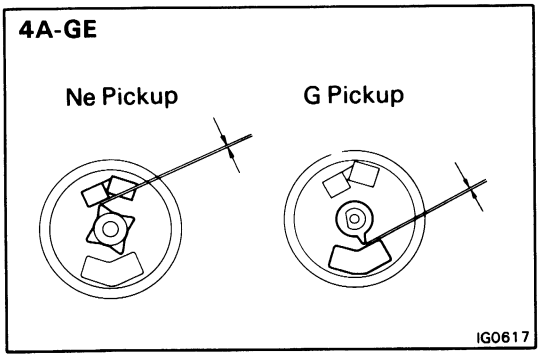

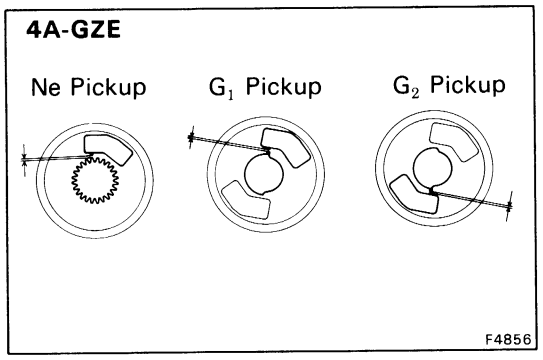

1. INSPECT AIR GAPS

Using a feeler gauge, measure the gap between the signal rotor and pickup coil projection.

Air gap: 0.2 − 0.4 mm (0.008 − 0.016 in.)

If the gap is not within specification, replace the distributor.

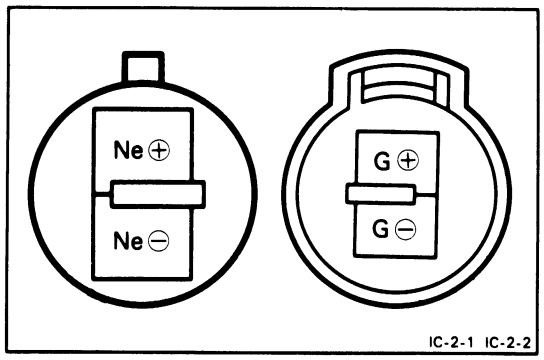

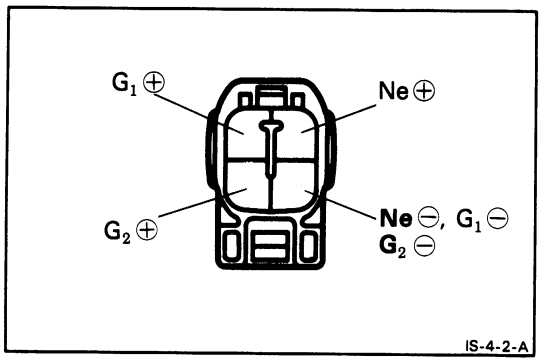

2. CHECK SIGNAL GENERATOR

Using an ohmmeter, check resistance of the two signal generators.

"G" signal generator resistance (cold):

4A-GE	**G ⊕ – G ⊖**	**140 – 180 Ω**
4A-GZE	**G_1 ⊕ – G_1 ⊖**	**140 – 180 Ω**
	G_2 ⊕ – G_2 ⊖	**140 – 180 Ω**

"Ne" signal generator resistance (cold):

Ne ⊕ – Ne ⊖	**140 – 180 Ω**

If the resistance is not correct, replace the distributor.

DISTRIBUTOR

COMPONENTS

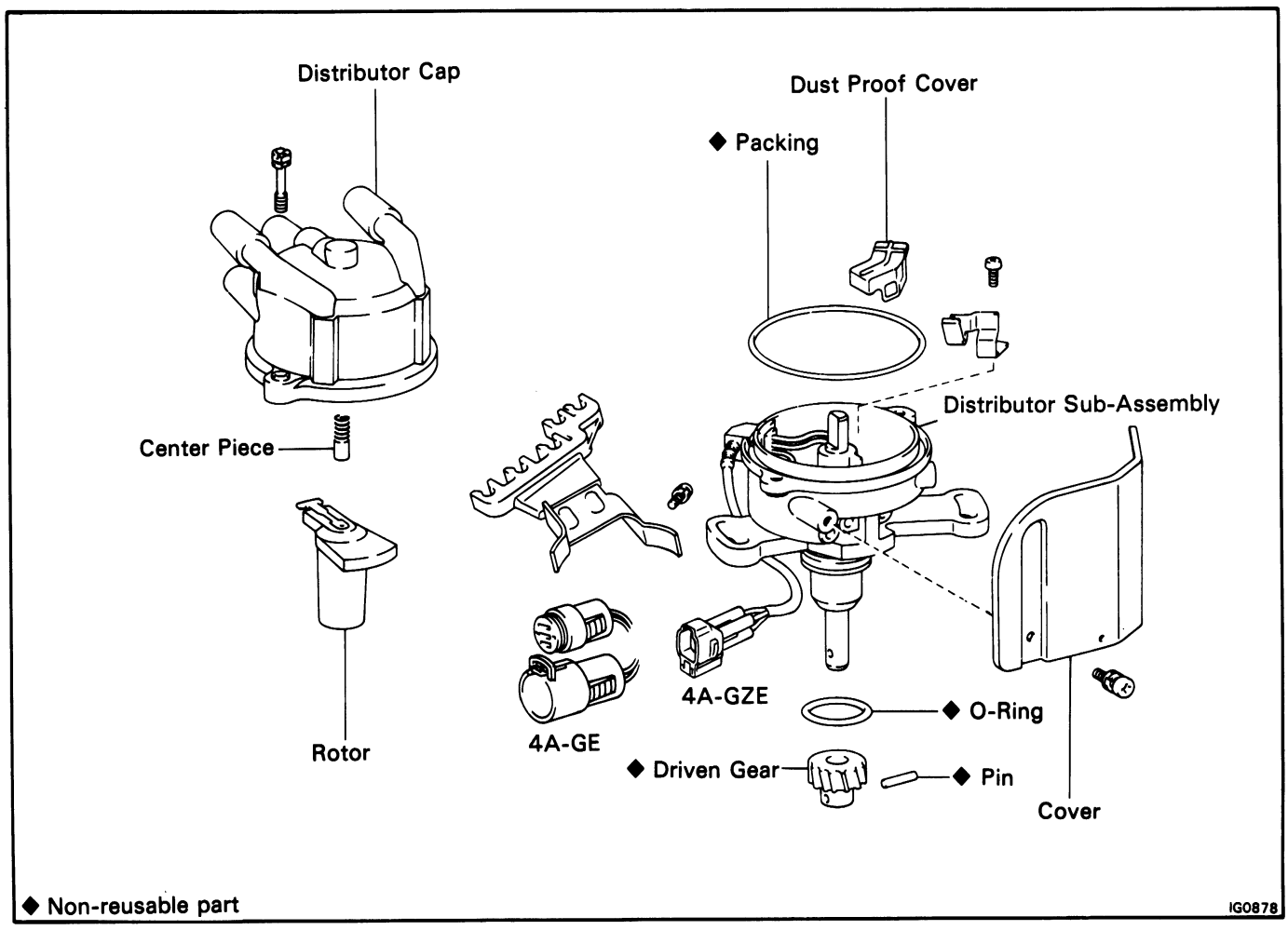

REMOVAL OF DISTRIBUTOR

1. **DISCONNECT HIGH-TENSION CORDS FROM CYLINDER HEAD AND IGNITION COIL**
2. **DISCONNECT DISTRIBUTOR CONNECTORS**

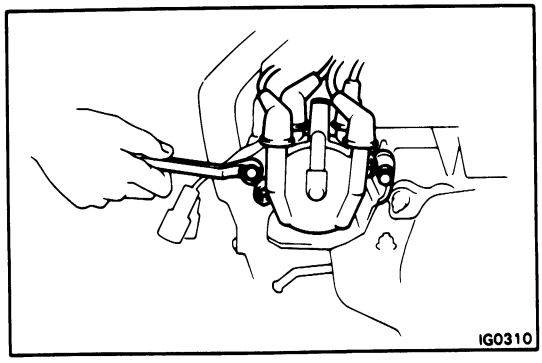

3. **REMOVE DISTRIBUTOR SET BOLTS**
4. **PULL OUT DISTRIBUTOR FROM CYLINDER HEAD**
5. **REMOVE O-RING**

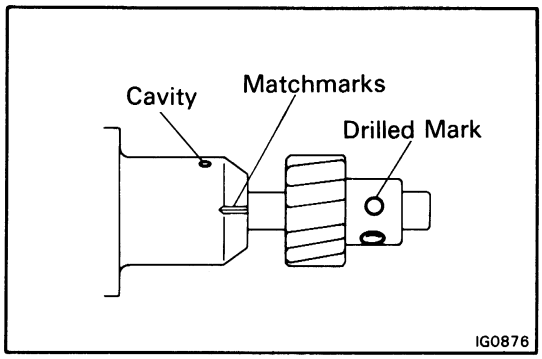

REPLACEMENT OF DISTRIBUTOR DRIVEN GEAR

1. GRIND DRIVEN GEAR AND PIN

(a) Align the drilled mark on the driven gear with the cavity of the housing.

(b) Place matchmarks on the housing and distributor shaft.

(c) Using a grinding wheel, grind the gear and pin.

CAUTION: Be careful not to damage the shaft.

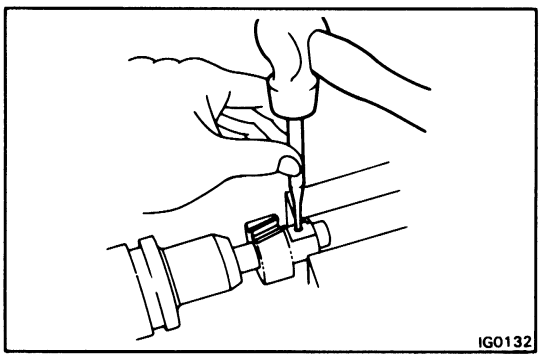

2. REMOVE PIN AND DRIVE GEAR

(a) Using a punch and hammer, drive out the pin.

(b) Remove the driven gear and discard it.

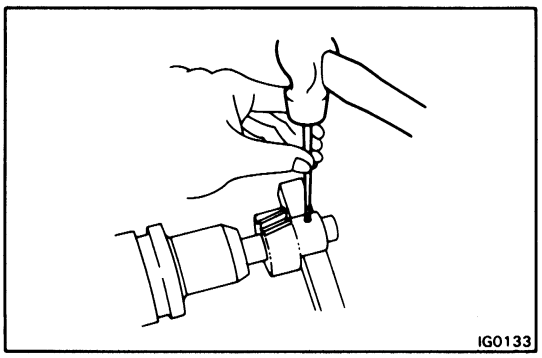

3. INSTALL NEW DRIVE GEAR AND PIN

(a) Align the matchmarks on the housing and distributor shaft.

(b) Align the drilled mark on the new driven gear with the cavity of the housing.

(c) Using a hammer, install a new pin.

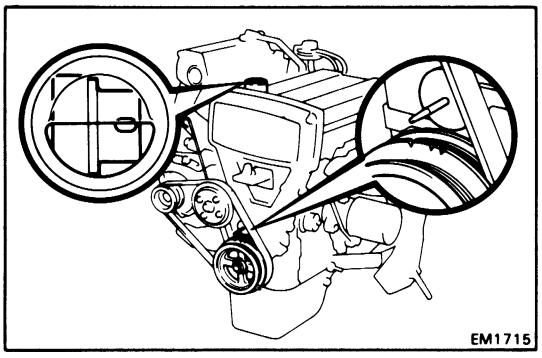

INSTALLATION OF DISTRIBUTOR

1. SET NO. 1 CYLINDER TO TDC/COMPRESSION

(a) Turn the crankshaft pulley and align its groove with the "O" mark on the No. 1 timing belt cover.

(b) Remove the oil filler cap and check that you can see the cavity in the camshaft.

If necessary, turn the crankshaft pulley one complete revolution.

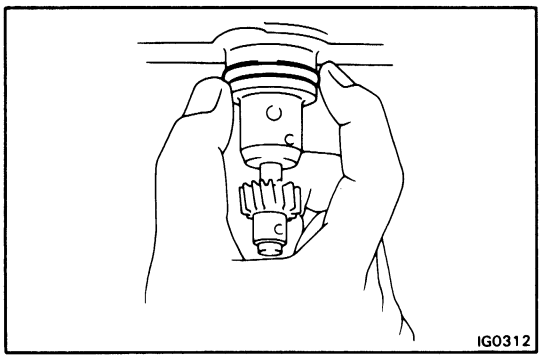

2. INSTALL DISTRIBUTOR

(a) Install a new O-ring to the distributor.

NOTE: Always use a new O-ring when installing the distributor.

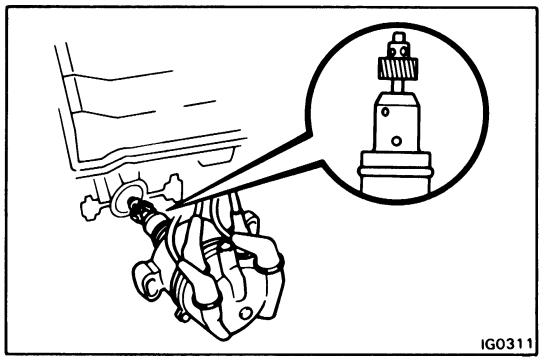

(b) Align the drilled mark on the driven gear with the cavity of the housing.

(c) Insert the distributor, aligning the center of the flange with that of the bolt hole on the cylinder head.

(d) Lightly tighten the hold-down bolts.

3. CONNECT DISTRIBUTOR CONNECTOR

4. CONNECT HIGH-TENSION CORDS TO CYLINDER HEAD AND IGNITION COIL

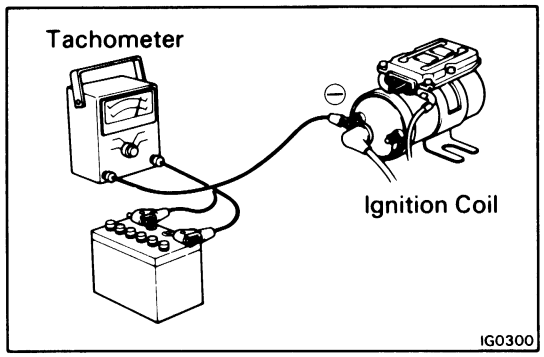

5. CONNECT TACHOMETER AND TIMING LIGHT TO ENGINE

Connect the tachometer (+) terminal to the ignition coil (−) terminal.

CAUTION:

- **NEVER allow the ignition coil terminal to touch ground as it could result in damage to the igniter and/or ignition coil.**
- **As some tachometers are not compatible with this ignition system, we recommended that you confirm the compatibility of your unit before using.**

6. WARM UP ENGINE

Allow the engine to reach normal operating temperature.

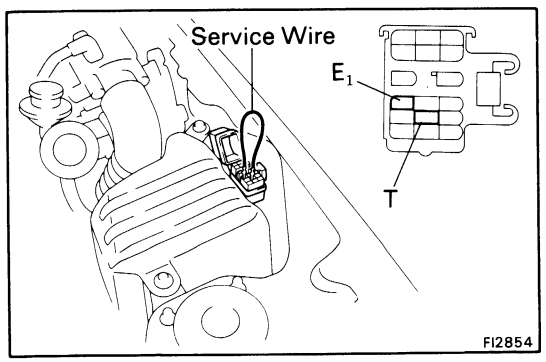

7. ADJUST IGNITION TIMING

(a) Short the terminals T and E_1 of the check connector.

NOTE: The service connector is located near the resonator (4A-GE) or intercooler (4A-GZE).

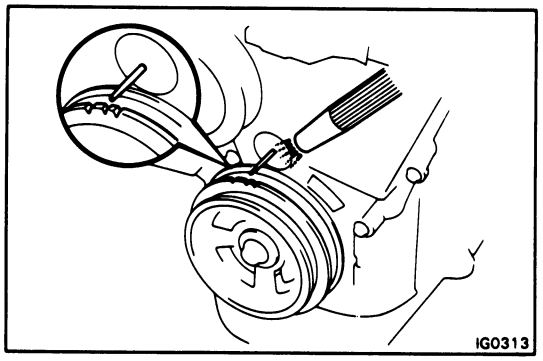

(b) Using a timing light, check the ignition timing.

Ignition timing: 10° BTDC @ Idling (w/short-circuited T-E_1, Transmission in "N" position)

(c) If necessary, loosen the distributor bolt and turn the distributor to align the marks. Recheck the timing after tightening the distributor.

Torque: 200 kg-cm (14 ft-lb, 20 N·m)

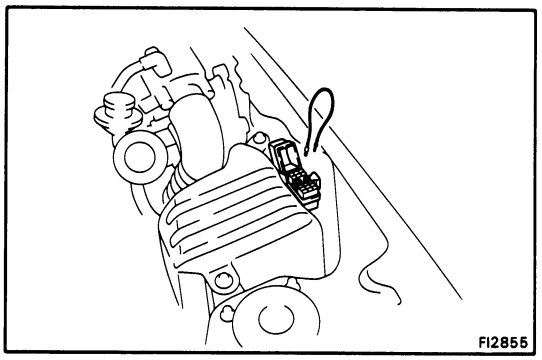

(d) Unshort the check connector.

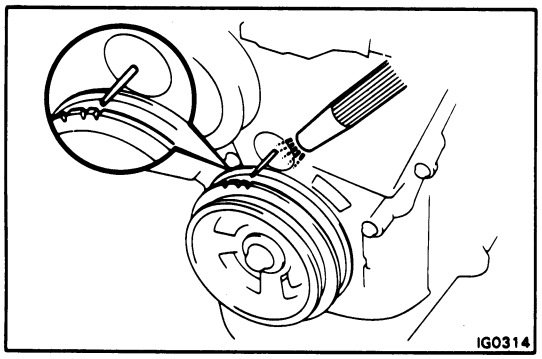

8. FURTHER CHECK IGNITION TIMING

Ignition timing: (Transmission in "N" position)
M/T More than 16° BTDC @ Idling
A/T More than 12° BTDC @ Idling

STARTING SYSTEM

	Page
TROUBLESHOOTING	ST-2
STARTER	ST-3
CLUTCH STARTER RELAY	ST-12
CLUTCH START SWITCH	ST-12

ST

TROUBLESHOOTING

Problem	Possible cause	Remedy	Page
Engine will not crank	Battery charge low	Check battery specific gravity	CH-3
		Charge or replace battery	
	Starter relay faulty	Replace starter relay	
	Battery cables loose, corroded or worn	Repair or replace cables	
	Clutch start switch faulty	Replace switch or adjust switch position	CL-4
	Fusible link blown	Replace fusible link	
	Starter faulty	Repair starter	ST-3
	Ignition switch faulty	Replace ignition switch	
Engine cranks slowly	Battery charge low	Check battery specific gravity	CH-3
		Charge or replace battery	
	Battery cables loose, corroded or worn	Repair or replace cables	
	Starter faulty	Repair starter	ST-3
Starter keeps running	Starter faulty	Repair starter	ST-3
	Ignition switch faulty	Replace ignition switch	
	Short in wiring	Repair wiring	
Starter spins – engine will not crank	Pinion gear teeth broken or faulty starter	Repair starter	ST-3
	Flywheel teeth broken	Replace flywheel	

STARTER

COMPONENTS

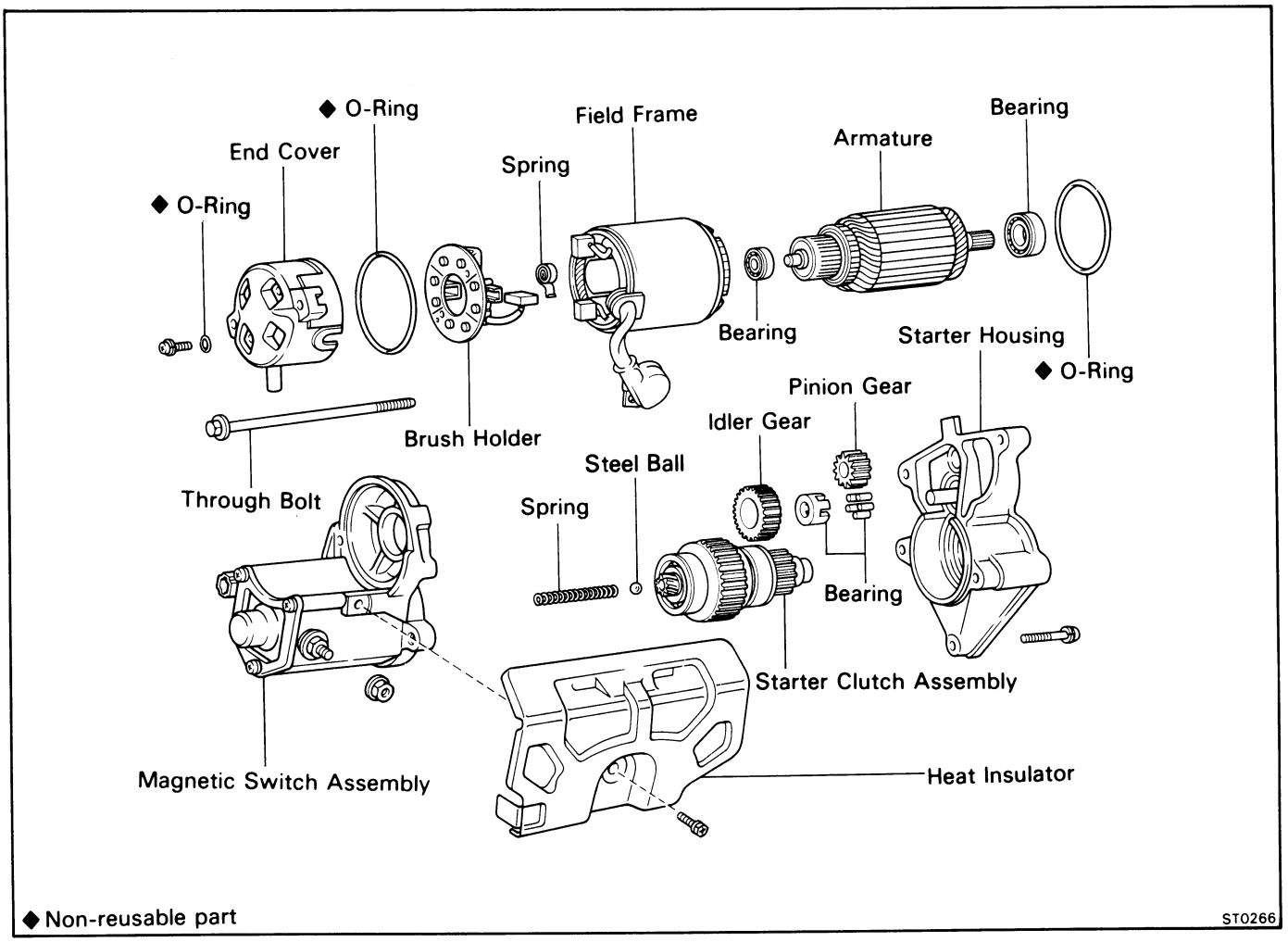

REMOVAL OF STARTER

1. **DISCONNECT CABLE FROM NEGATIVE TERMINAL OF BATTERY**

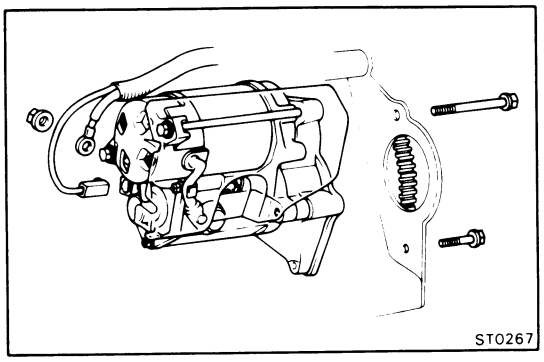

2. **DISCONNECT TWO WIRES FROM STARTER**

   Remove the nut and disconnect the battery cable from the magnetic switch on the starter motor. Disconnect the other wire from terminal 50.

3. **REMOVE STARTER MOTOR**

   Remove the two bolts and the starter motor.

4. **REMOVE HEAT INSULATOR**

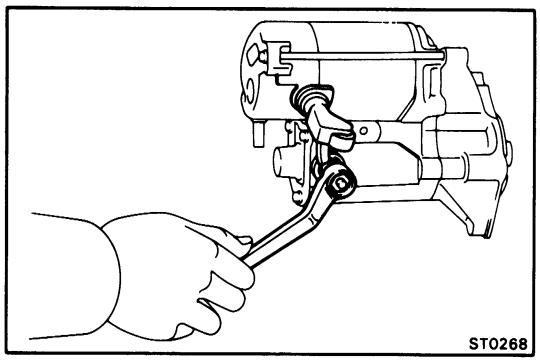

DISASSEMBLY OF STARTER

(See page ST-3)

1. REMOVE FIELD FRAME WITH ARMATURE FROM MAGNETIC SWITCH ASSEMBLY

(a) Remove the nut and lead wire from the magnetic switch terminal.

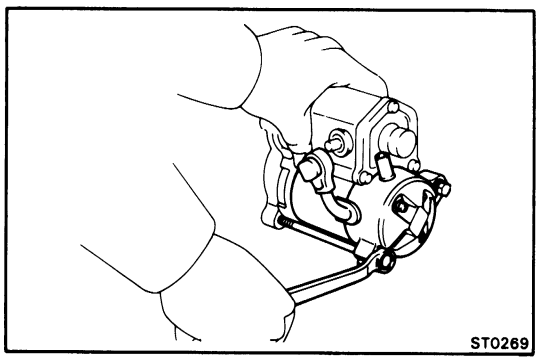

(b) Remove the two through bolts. Pull out the field frame with the armature from the magnetic switch assembly.

(c) Remove the O-ring.

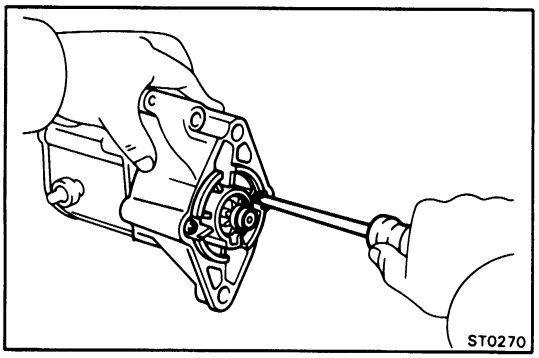

2. REMOVE STARTER HOUSING FROM MAGNETIC SWITCH ASSEMBLY

(a) Remove the two screws.

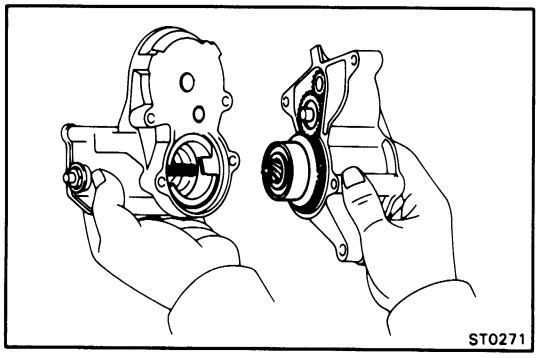

(b) Remove the starter housing with the pinion gear, idler gear and clutch assembly

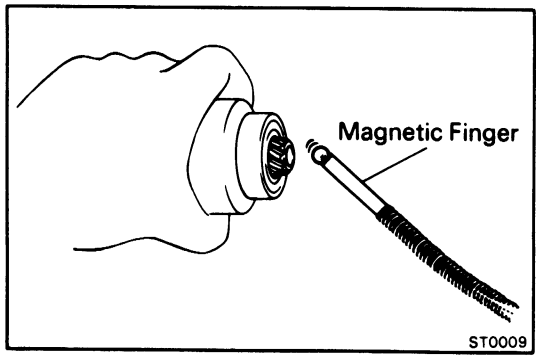

3. REMOVE CLUTCH ASSEMBLY AND GEARS FROM STARTER HOUSING

4. REMOVE STEEL BALL AND SPRING

Using a magnetic finger, remove the spring and steel ball from the clutch shaft hole.

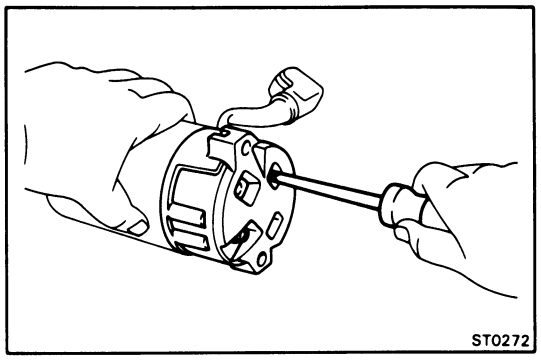

5. **REMOVE BRUSHES AND BRUSH HOLDER**
   (a) Remove the two screws and end cover from the field frame.
   (b) Remove the O-ring.

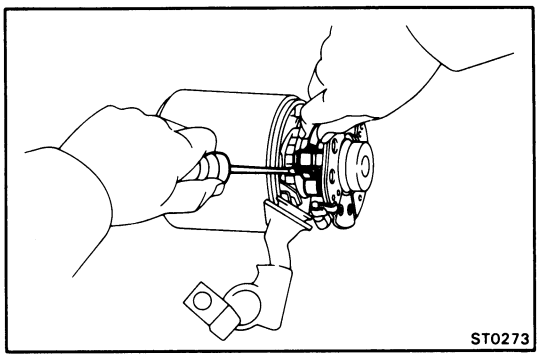

   (c) Using a screwdriver or steel wire, separate the brush springs, and remove the brushes from the brush holder.
   (d) Pull the brush holder off the field frame.

6. **REMOVE ARMATURE FROM FIELD FRAME**

INSPECTION OF STARTER

Armature Coil

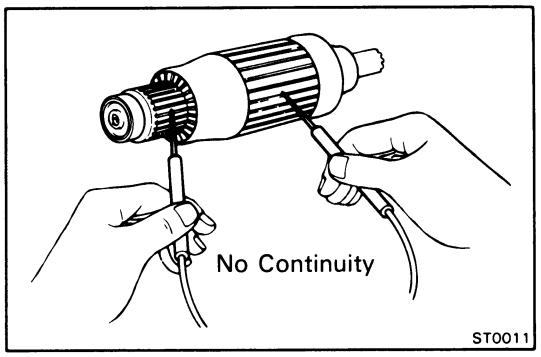

1. **INSPECT THAT COMMUTATOR IS NOT GROUNDED**
   Using an ohmmeter, check that there is no continuity between the commutator and armature coil core.
   If there is continuity, replace the armature.

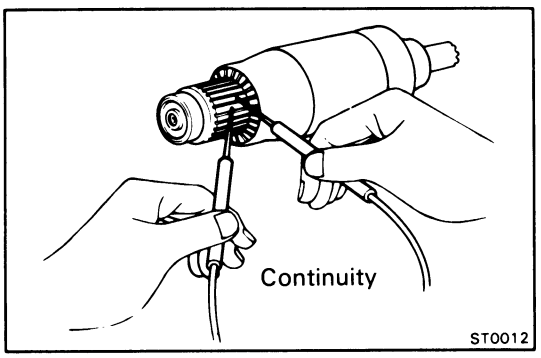

2. **INSPECT COMMUTATOR FOR OPEN CIRCUIT**
   Using an ohmmeter, check for continuity between the segments of the commutator.
   If there is no continuity between any segment, replace the armature.

Commutator

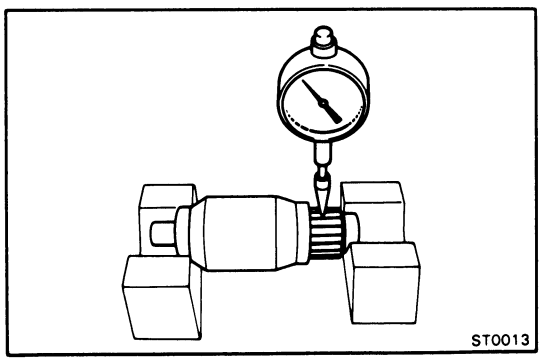

1. **INSPECT COMMUTATOR FOR DIRTY AND BURNT SURFACES**
   If the surface is dirty or burnt, correct with sandpaper (No. 400) or a lathe.

2. **INSPECT COMMUTATOR CIRCLE RUNOUT**
   If the circle runout is greater than the maximum, correct with a lathe.
   Maximum circle runout: 0.05 mm (0.0020 in.)

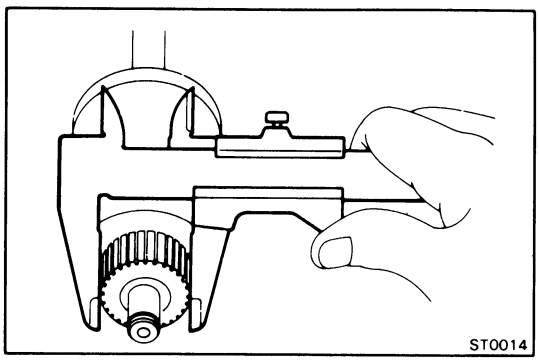

3. MEASURE DIAMETER OF COMMUTATOR

If the diameter of the commutator is less than the minimum, replace the armature.

Standard diameter: 30 mm (1.18 in.)
Minimum diameter: 29 mm (1.14 in.)

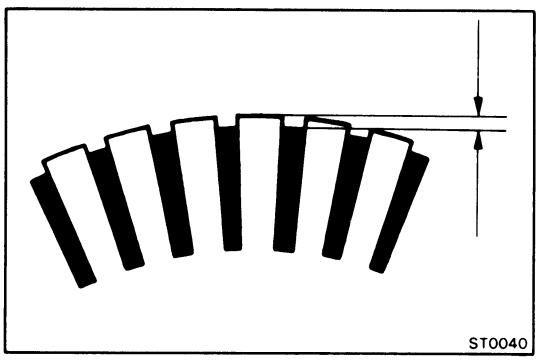

4. INSPECT UNDERCUT DEPTH

Check that the undercut depth is clean and free of foreign particles. Smooth out the edge.

If the undercut depth is less than the minimum, correct it with a hacksaw.

Standard undercut depth: 0.6 mm (0.024 in.)
Minimum undercut depth: 0.2 mm (0.008 in.)

Field Frame (Field Coil)

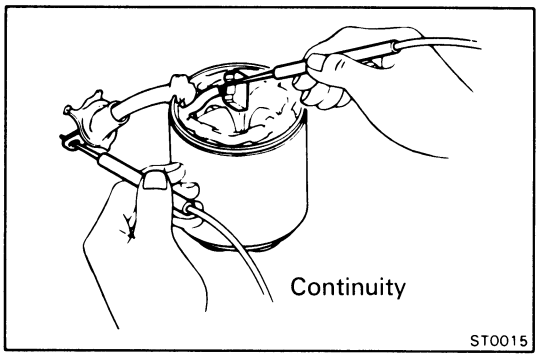

1. INSPECT FIELD COIL FOR OPEN CIRCUIT

Using an ohmmeter, check for continuity between the lead wire and field coil brush lead.

If there is no continuity, replace the field frame.

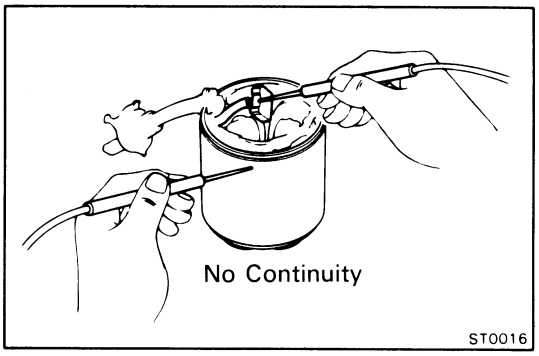

2. INSPECT THAT FIELD COIL IS NOT GROUNDED

Using an ohmmeter, check for no continuity between the field coil end and field frame.

If there is continuity, replace the field frame.

Brushes

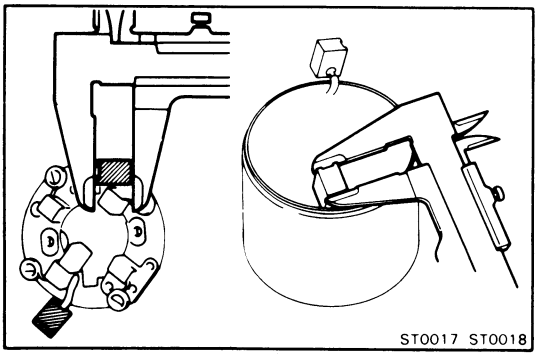

MEASURE BRUSH LENGTH

If length is less than the minimum, replace the brush and dress with an emery cloth.

Standard length: 15.5 mm (0.610 in.)
Minimum length: 10.0 mm (0.394 in.)

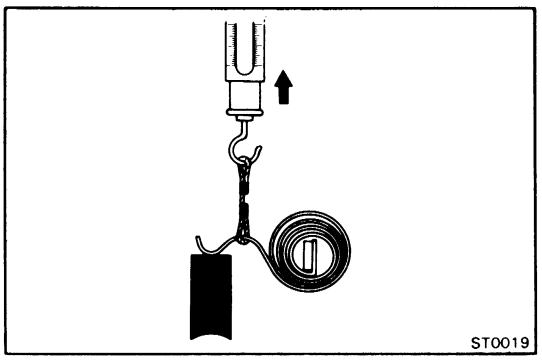

Brush Spring

MEASURE BRUSH SPRING LOAD WITH A PULL SCALE

If the reading is below standard, replace the brush spring.

Spring installed load: 1.785 – 2.415 kg (3.9 – 5.3 lb, 18 – 24 N)

NOTE: Take the pull scale reading at the very instant the brush spring separates from the brush.

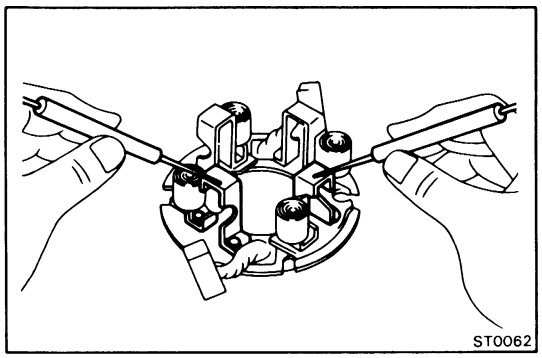

Brush Holder

INSPECT INSULATION OF BRUSH HOLDER

Using an ohmmeter, check for continuity between the positive and negative brush holders.

If there is continuity, repair or replace the brush holder.

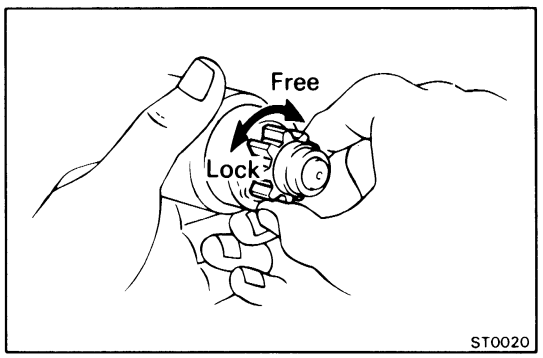

Clutch and Gears

1. **INSPECT GEAR TEETH**

   Check the gear teeth on the pinion gear, idler gear and clutch assembly for wear or damage. Replace if damaged.

   If damaged, also check the flywheel ring gear for wear or damage.

2. **INSPECT CLUTCH**

   Rotate the pinion clockwise and check that it turns freely. Try to rotate the pinion counterclockwise and check that it locks.

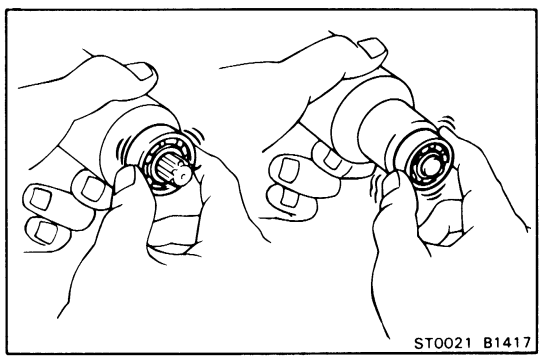

Bearings

1. **INSPECT BEARINGS**

   Turn each bearing by hand while applying inward force.

   If resistance is felt or if the bearing sticks, replace the bearing.

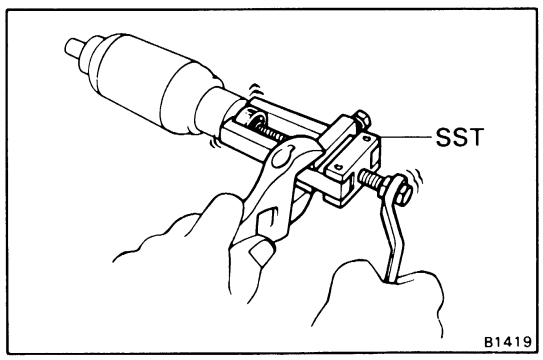

2. **IF NECESSARY, REPLACE BEARINGS**

   (a) Using SST, remove the bearing from the armature shaft.

   (b) Using SST, remove the other bearing on the opposite side.

   SST 09286-46011

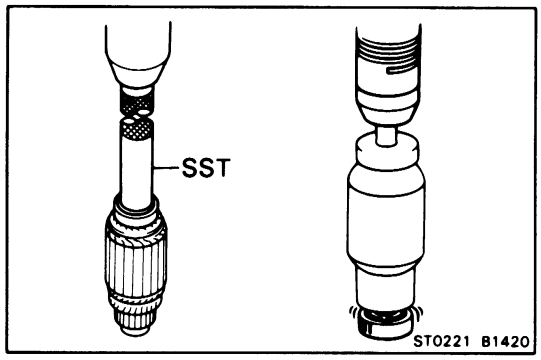

(c) Using SST and a press, tap a new large bearing onto the shaft.

SST 09201-41020

(d) Using a press, install a new small bearing onto the shaft.

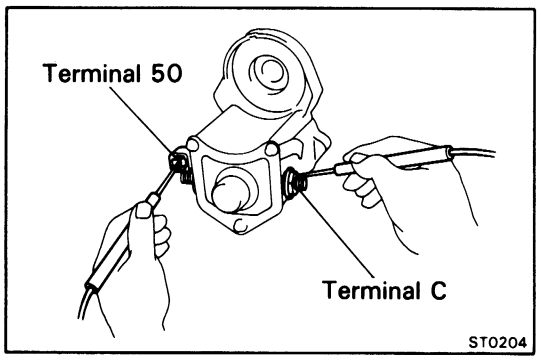

Magnetic Switch

1. PERFORM PULL-IN COIL OPEN CIRCUIT TEST

Using an ohmmeter, check for continuity between terminal 50 and terminal C.

If there is no continuity, replace the magnetic switch.

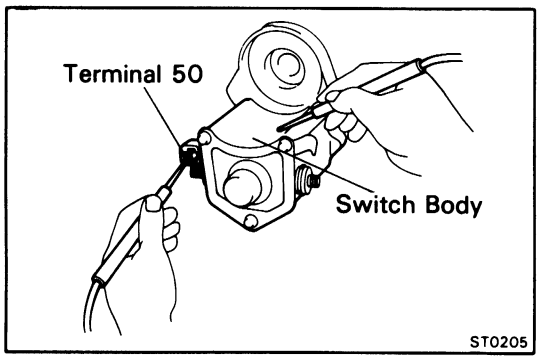

2. PERFORM HOLD-IN COIL OPEN CIRCUIT TEST

Using an ohmmeter, check for continuity between terminal 50 and the switch body.

If there is no continuity, replace the magnetic switch.

ASSEMBLY OF STARTER

(See page ST-3)

NOTE: Use high-temperature grease to lubricate the bearings and gears when assembling the starter.

1. PLACE ARMATURE INTO FIELD FRAME

Apply grease to the armature bearings and insert the armature into the field frame.

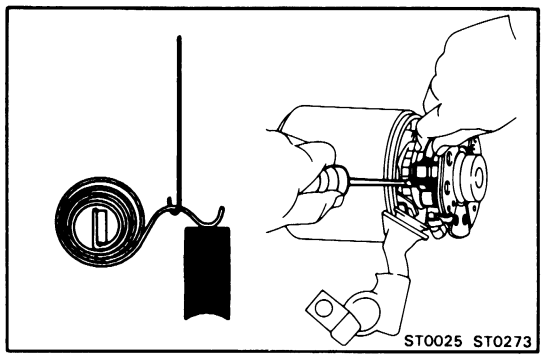

2. INSTALL BRUSH HOLDER AND BRUSHES

(a) Using a screwdriver or steel wire, hold the brush spring back, and install the brush into the brush holder. Install four brushes.

NOTE: Make sure that the positive lead wires are not grounded.

(b) Place the O-ring on the field frame.

(c) Install the end cover to the field frame.

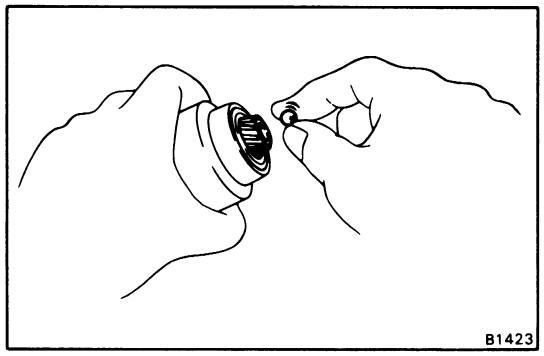

3. INSERT STEEL BALL INTO CLUTCH SHAFT HOLE

Apply grease to the ball and spring, and insert them into the clutch shaft hole.

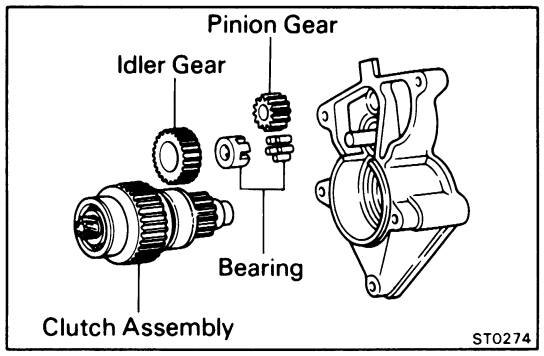

4. INSTALL GEARS AND CLUTCH ASSEMBLY TO STARTER HOUSING

(a) Apply grease to the gears and clutch assembly.

(b) Place the clutch assembly, idler gear, bearing and pinion gear in the starter housing.

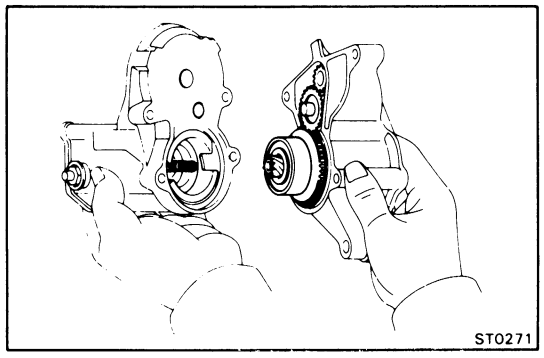

5. INSTALL STARTER HOUSING

(a) Insert the spring into the clutch shaft hole.

(b) Place the starter housing on the magnetic switch.

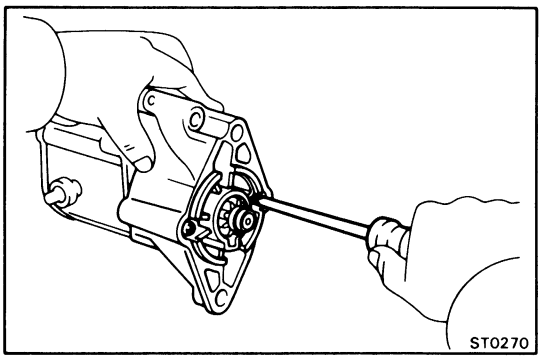

(c) Install the two screws.

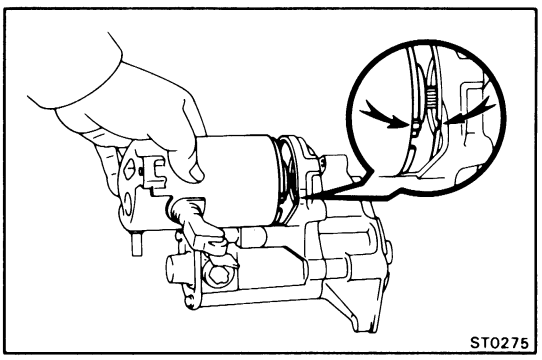

6. INSTALL FIELD FRAME WITH ARMATURE IN MAGNETIC SWITCH ASSEMBLY

(a) Place the O-ring on the field frame.

(b) Match the protrusion of the field frame with the magnetic switch assembly.

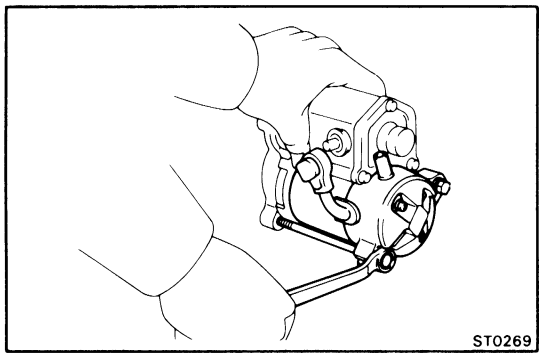

(c) Install the two through bolts.

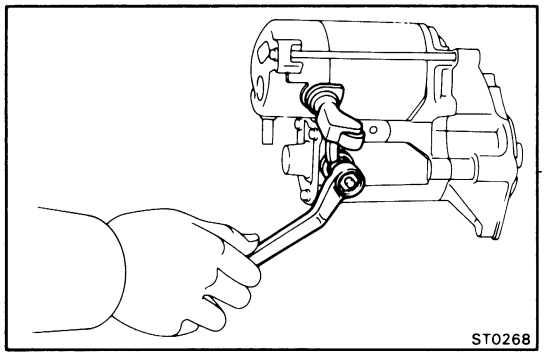

(d) Connect the lead wire to the terminal on the magnetic switch assembly with the nut.

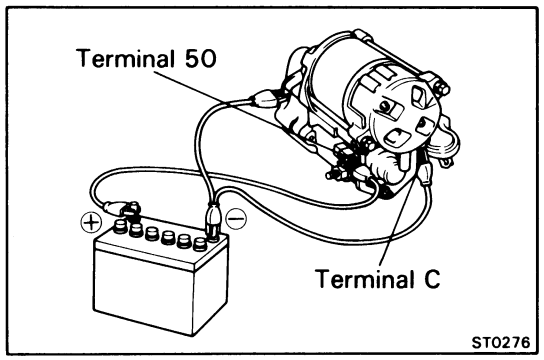

PERFORMANCE TEST OF STARTER

CAUTION: These tests must be performed within 3 to 5 seconds to avoid burning out the coil.

1. PERFORM PULL-IN TEST

(a) Disconnect the field coil lead from terminal C.

(b) Connect the battery to the magnetic switch as shown.
Check that the plunger moves outward.

If the plunger does not move, replace the magnetic switch.

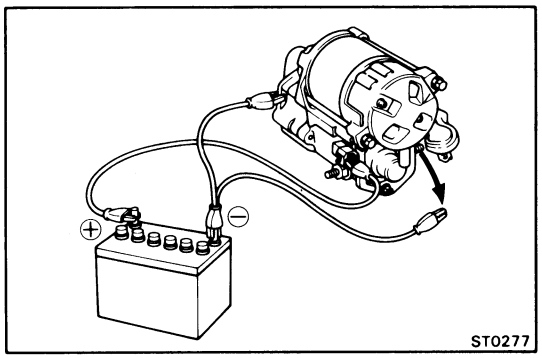

2. PERFORM HOLD-IN TEST

While connected as above with the plunger out, disconnect the negative lead from terminal C. Check that the plunger remains out.

If the plunger returns inward, replace the magnetic switch.

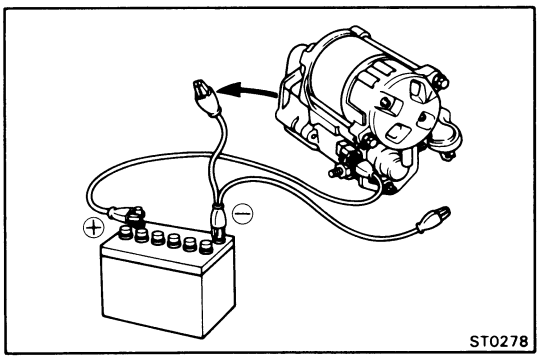

3. INSPECT PLUNGER RETURN

Disconnect the negative lead from the switch body. Check that the plunger returns inward.

If the plunger does not return, replace the magnetic switch.

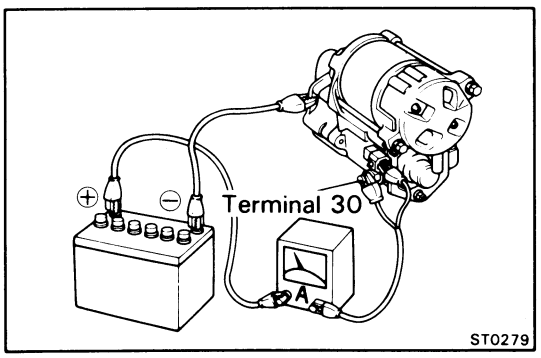

4. PERFORM NO-LOAD PERFORMANCE TEST

(a) Connect the battery and ammeter to the starter as shown.

(b) Check that the starter rotates smoothly and steadily with the pinion moving out. Check that the ammeter reads the specified current.

Specified current: Less than 90 A at 11.5 V

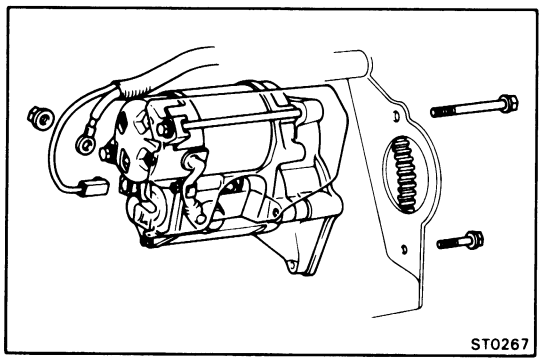

INSTALLATION OF STARTER

1. **INSTALL HEAT INSULATOR**

2. **INSTALL STARTER MOTOR IN FLYWHEEL BELLHOUSING**

   Place the starter motor in the flywheel bellhousing. Install and torque the two bolts.

   Torque: 400 kg-cm (29 ft-lb, 39 N·m)

3. **CONNECT TWO WIRES TO STARTER**

   Connect the connector to the terminal on the magnetic switch. Connect the cable from the battery to the terminal on the switch, and install the nut.

4. **CONNECT CABLE TO NEGATIVE TERMINAL OF BATTERY**

   Check that the engine starts.

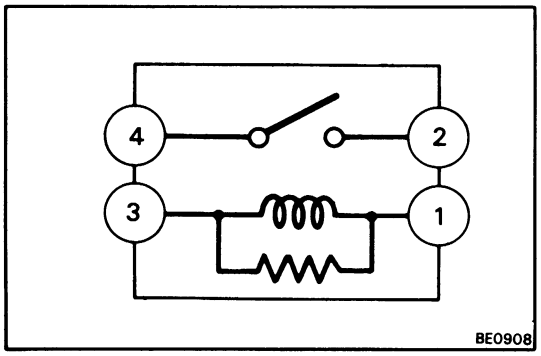

CLUTCH STARTER RELAY

INSPECTION OF CLUTCH STARTER RELAY

INSPECT CLUTCH STARTER RELAY

NOTE: The relay located in the No. 2 junction block of the engine compartment.

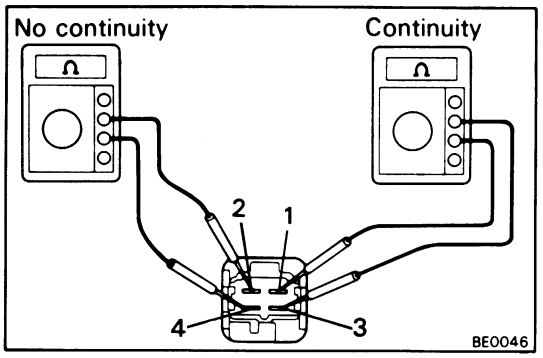

Inspect Relay Continuity

(a) Using an ohmmeter, check that there is continuity between terminals 1 and 3.

(b) Check that there is no continuity between terminals 2 and 4.

If continuity is not as specified, replace the relay.

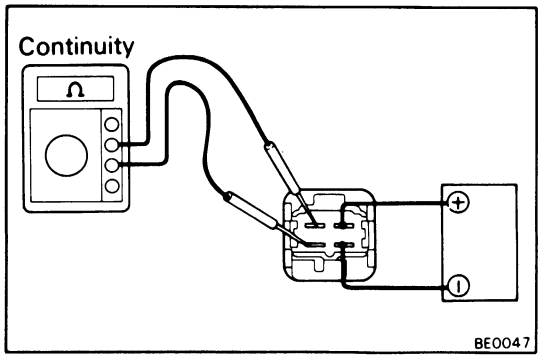

Inspect Relay Operation

(a) Apply battery voltage across terminals 1 and 3.

(b) Check that there is continuity between terminals 2 and 4.

If operation is not as specified, replace the relay.

CLUTCH START SWITCH (M/T ONLY)

(See page CL-4)

CHARGING SYSTEM

	Page
PRECAUTIONS	CH-2
TROUBLESHOOTING	CH-2
ON-VEHICLE INSPECTION	CH-3
ALTERNATOR	CH-6
ENGINE MAIN RELAY	CH-16

PRECAUTIONS

1. **Check that the battery cables are connected to the correct terminals.**
2. **Disconnect the battery cables when the battery is given a quick charge.**
3. **Do not perform tests with a high voltage insulation resistance tester.**
4. **Never disconnect the battery while the engine is running.**

TROUBLESHOOTING

Problem	Possible cause	Remedy	Page
Discharge warning light does not light with ignition ON and engine off	Fuse blown	Check CHARGE, AM_2 and ENGINE fuses	
	Light burned out	Replace light	
	Wiring connection loose	Tighten loose connections	
	Engine main relay faulty	Check relay	CH-14
	IC regulator faulty	Replace IC regulator	CH-7
Discharge warning light does not go out with engine running (battery requires frequent recharging)	Drive belt loose or worn	Adjust or replace drive belt	CH-4
	Battery cables loose, corroded or worn	Repair or replace cables	
	Fuse blown	Check "CHARGE" fuse	
	Fusible link blown	Replace fusible link	CH-3
	IC regulator or alternator faulty	Check charging system	CH-5
	Wiring faulty	Repair wiring	

ON-VEHICLE INSPECTION

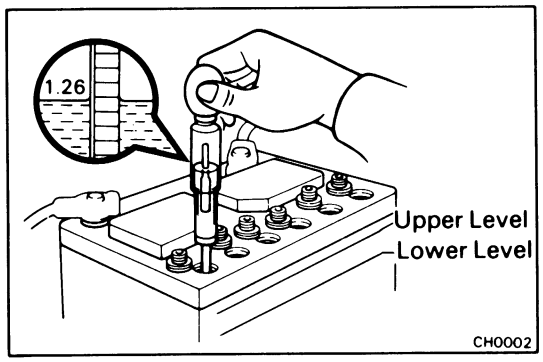

1. CHECK BATTERY SPECIFIC GRAVITY AND ELECTROLYTE LEVEL

(a) Check the specific gravity of each cell.

Standard specific gravity
When fully charged at 20°C (68°F): 1.27 – 1.29

If not within specifications, charge the battery.

(b) Check the electrolyte quantity of each cell.
If insufficient, refill with distilled (or purified) water.

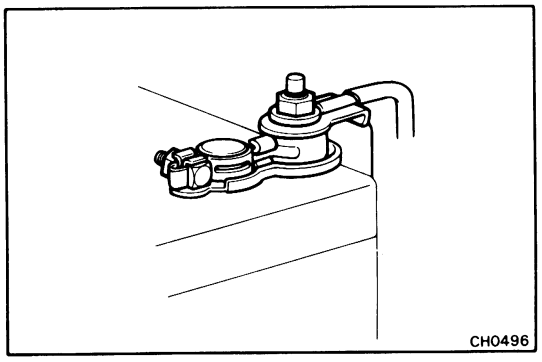

2. CHECK BATTERY TERMINALS AND FUSIBLE LINK

(a) Check that the battery terminals are not loose or corroded.

(b) Check the fusible links for continuity.

3. CHECK FUSES FOR CONTINUITY

ENGINE fuse (10A)
CHARGE fuse (5A)
AM_2 (7.5A)

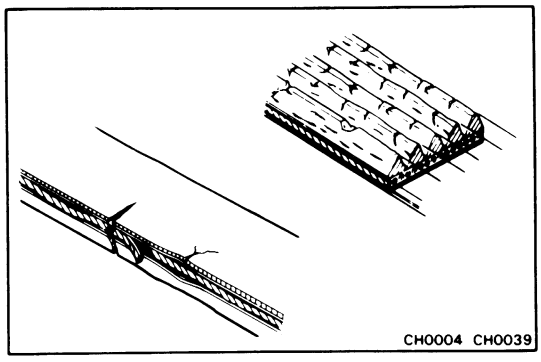

4. INSPECT ALTERNATOR DRIVE BELT

(a) Visually check the belt for separation of the adhesive rubber above and below the core, core separation from the belt side, severed core, separation of the rib from the adhesive rubber, cracking or separation of the ribs, torn or worn ribs or cracks in the inner ridges of the ribs.

If necessary, replace the drive belt.

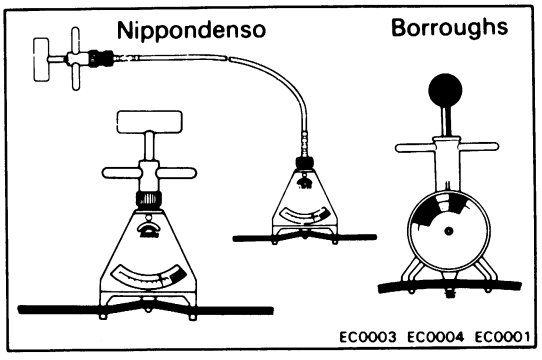

(b) Using a belt tension gauge, check the drive belt tension.

Belt tension gauge:

Nippondenso	BTG-20 (95506-00020) or
Borroughs	No. BT-33-73F

Drive belt tension:	**New belt**	**175 ± 5 lb**
	Used belt	**115 ± 20 lb**

If necessary, adjust the drive belt tension.

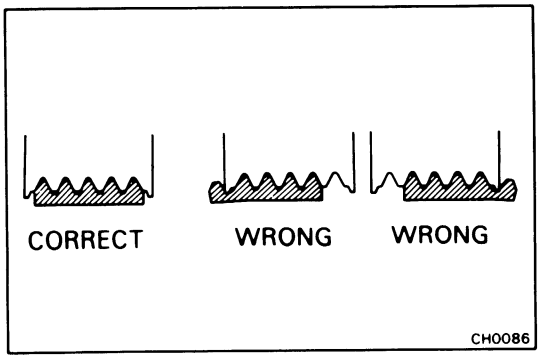

NOTE:
- "New belt" refers to a belt which has been used less than 5 minutes on a running engine.
- "Used belt" refers to a belt which has been used on a running engine for 5 minutes or more.
- After installing the drive belt, check that it fits properly in the ribbed grooves.

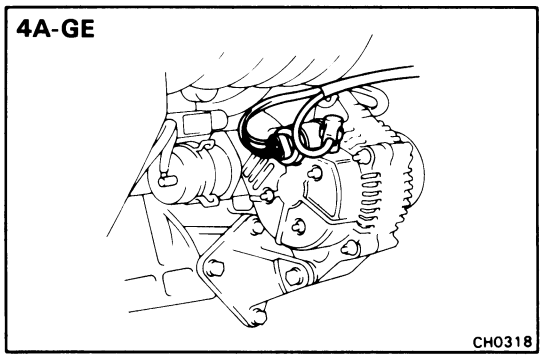

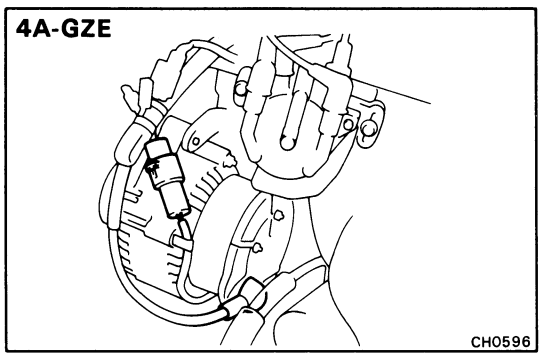

5. VISUALLY CHECK ALTERNATOR WIRING AND LISTEN FOR ABNORMAL NOISES

(a) Check that the wiring is in good condition.

(b) Check that there are no abnormal noises from the alternator while the engine is running.

6. CHECK DISCHARGE WARNING LIGHT CIRCUIT

(a) Warm up the engine and then turn it off.

(b) Turn off all accessories.

(c) Turn the ignition switch to "ON." Check that the discharge warning light is lit.

(d) Start the engine. Check that the light goes out.

If the light does not come on and go off as specified, troubleshoot the warning light circuit.

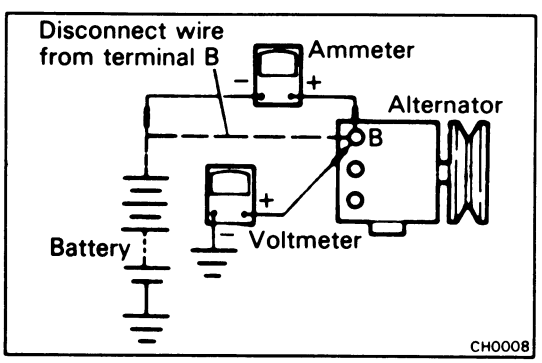

7. CHECK CHARGING CIRCUIT WITHOUT LOAD

NOTE: If a battery/alternator tester is available, connect the tester to the charging circuit as per the manufacturer's instructions.

(a) If a tester is not available, connect a voltmeter and ammeter to the charging circuit as follows:

- Disconnect the wire from terminal "B" of the alternator and connect it to the negative terminal of the ammeter.
- Connect the test lead from the positive terminal of the ammeter to terminal "B" of the alternator.
- Connect the positive lead of the voltmeter to terminal "B" of the alternator.
- Connect the negative lead of the voltmeter to ground.

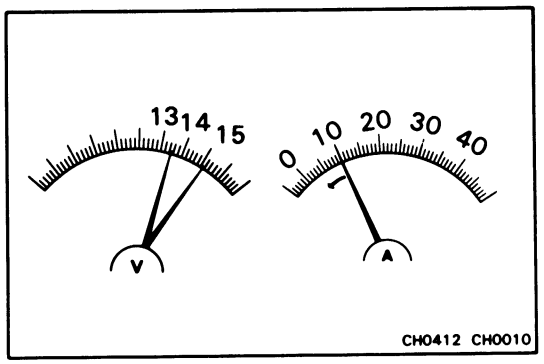

(b) Check the charging circuit as follows:
With the engine running from idling to 2,000 rpm, check the reading on the ammeter and voltmeter.

Standard amperage: Less than 10 A
Standard voltage:

4A-GE	**13.9 – 15.1 V at 25°C (77°F)**
	13.5 – 14.3 V at 115°C (239°F)
4A-GZE	**13.7 – 14.8 V at 25°C (77°F)**
	13.2 – 14.0 V at 115°C (239°F)

- If the voltage reading is greater than standard, replace the IC regulator.
- If the voltage reading is less than standard, check the IC regulator and alternator as follows:
  with terminal "F" grounded, start the engine and check the voltage reading of terminal "B".
- If the voltage reading is greater than standard, replace the IC regulator.
- If the voltage reading is less than standard, check the alternator.

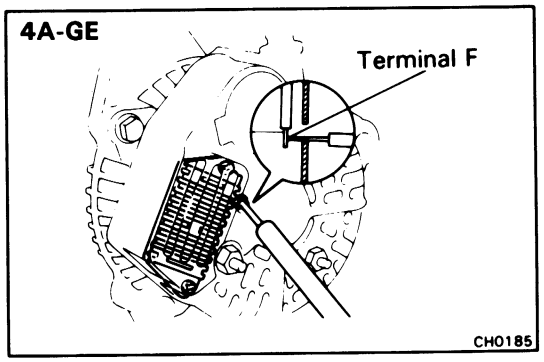

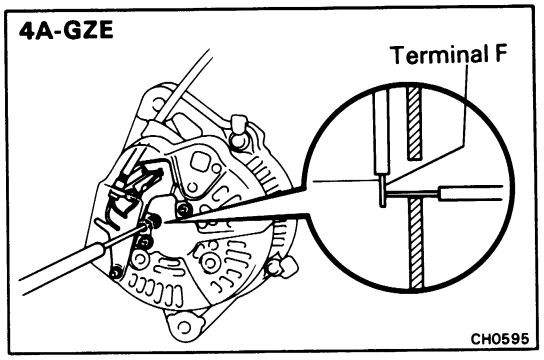

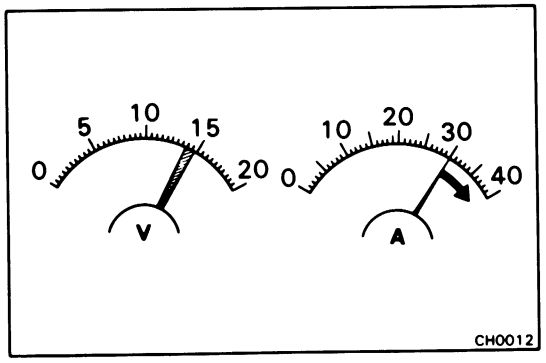

8. CHECK CHARGING CIRCUIT WITH LOAD

(a) With the engine running at 2,000 rpm, turn on the high beam headlights and place the heater fan control switch at "HI."

(b) Check the reading on the ammeter.

Standard amperage: More than 30 A

If the ammeter reading is less than 30A, repair the alternator. (See page CH-6)

NOTE: If the battery is fully charged, sometimes the indication will be less than 30A.

ALTERNATOR

COMPONENTS

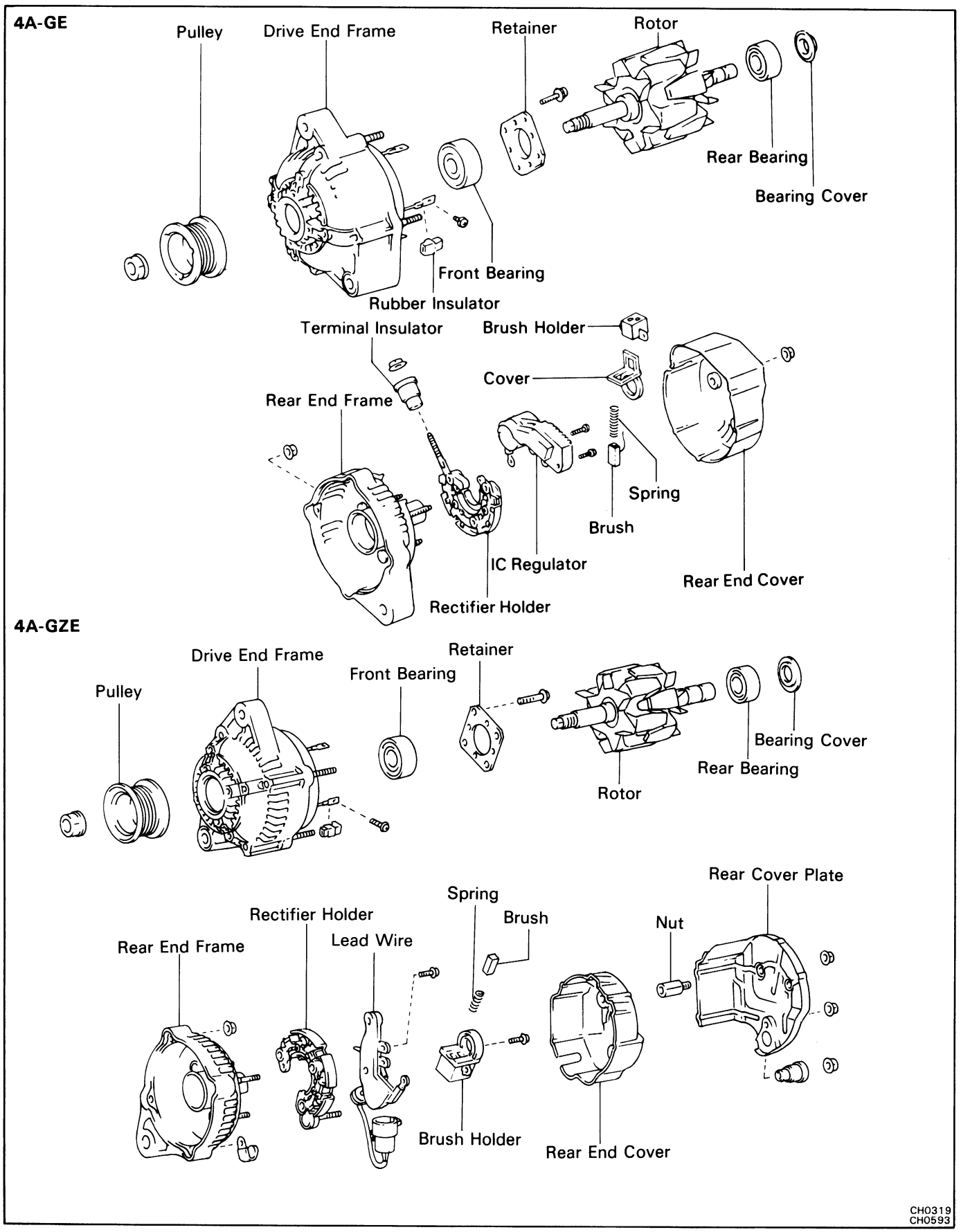

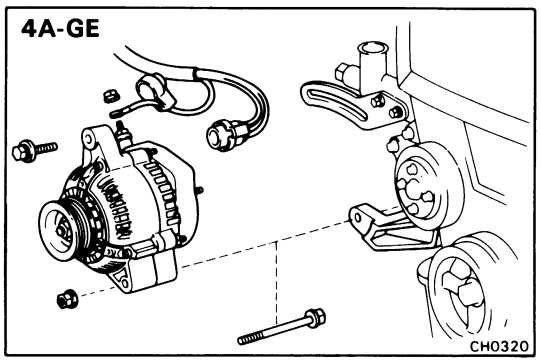

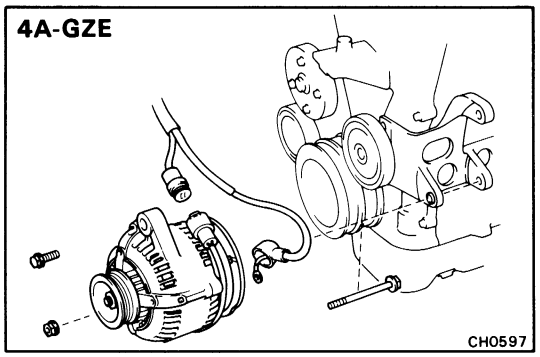

REMOVAL OF ALTERNATOR

1. DISCONNECT CABLE FROM NEGATIVE TERMINAL OF BATTERY

2. DISCONNECT WIRE FROM ALTERNATOR

(a) Disconnect the connector from the alternator.

(b) Remove the nut and wire from the alternator.

3. REMOVE ALTERNATOR DRIVE BELT

Loosen the alternator pivot nut, bolt and adjusting lock bolts, and remove the drive belt.

4. REMOVE ALTERNATOR

(a) Remove the pivot nut, bolt and adjusting lock bolts.

(b) Remove the alternator.

DISASSEMBLY OF ALTERNATOR

(See page CH-6)

1. (4A-GZE)
REMOVE REAR COVER PLATE

(a) Remove the nut and terminal insulator.

(b) Remove the three nuts and cover plate.

(c) Remove the two bolts.

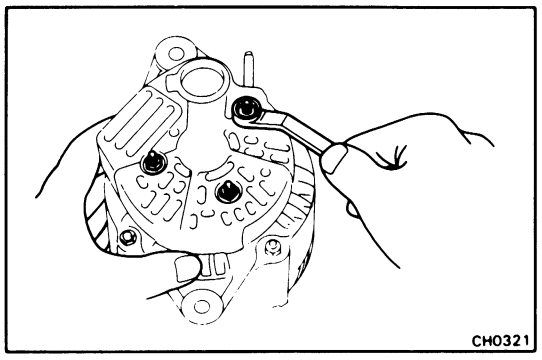

2. REMOVE REAR END COVER

(a) (4A-GE)
Remove the nut and terminal insulator.

(b) Remove the three nuts and end cover.

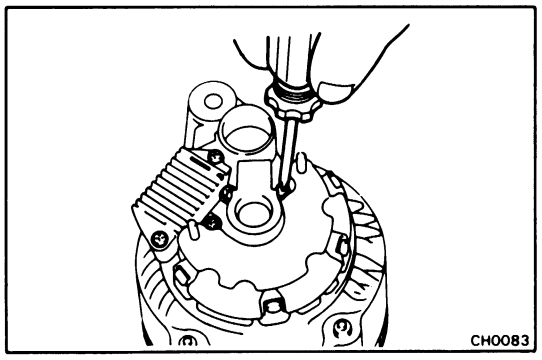

3. REMOVE BRUSH HOLDER AND IC REGULATOR (4A-GE) OR LEAD WIRE (4A-GZE)

(4A-GE)
Remove the five screws, brush holder and IC regulator.

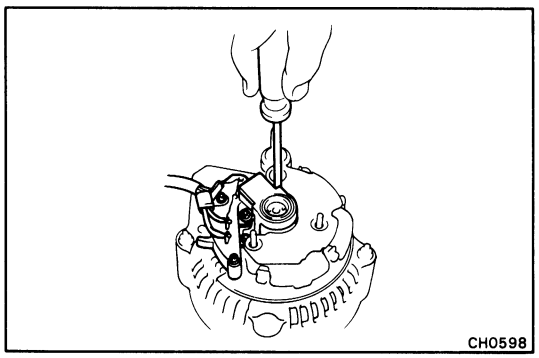

(4A-GZE)
Remove the five screws, brush holder and lead wire.

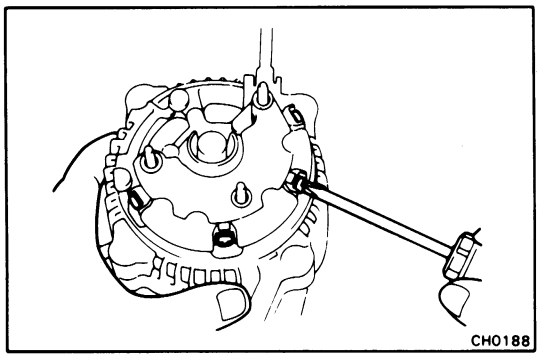

4. REMOVE RECTIFIER HOLDER

Remove the four screws, rectifier holder and rubber insulators.

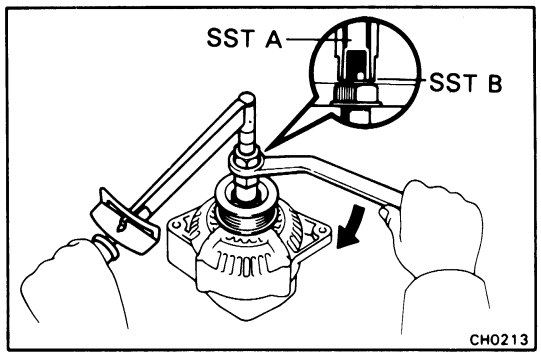

5. REMOVE PULLEY

(a) Hold SST A with a torque wrench and tighten SST B clockwise to the specified torque.

SST 09820-63010

Torque: 400 kg-cm (29 ft-lb, 39 N·m)

(b) Confirm that SST A is secured to the pulley shaft.

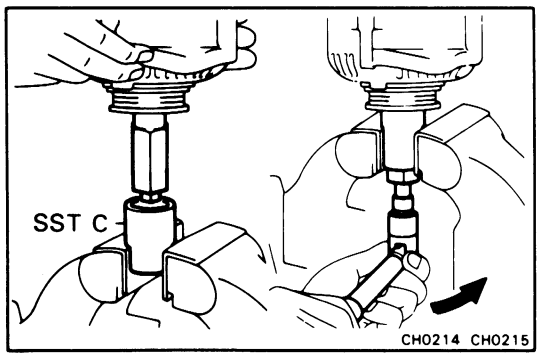

(c) As shown in the figure, grip SST C in a vise and then install the alternator to SST C.

(d) To loosen the pulley nut, turn SST A in the direction shown in the figure.

CAUTION: To prevent damage to the rotor shaft, do not loosen the pulley nut more the one-half of a turn.

(e) Remove the alternator from SST C.

(f) Turn SST B and remove all SSTs.

(g) Remove the pulley nut and the pulley.

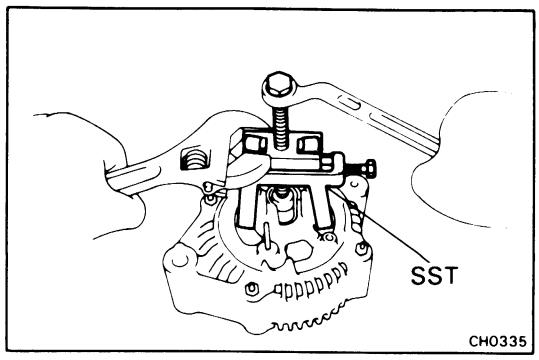

6. REMOVE REAR END FRAME

(a) Remove the four nuts.

(b) Using SST, remove the rear end frame.

SST 09286-46011

7. REMOVE ROTOR FROM DRIVE END FRAME

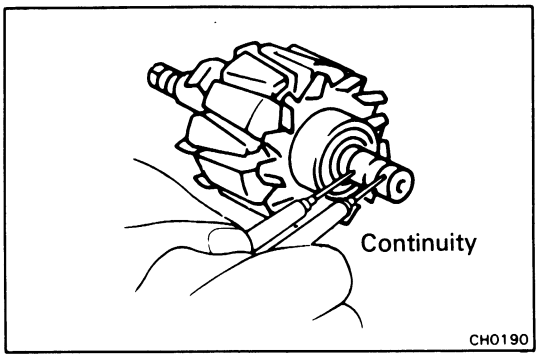

INSPECTION AND REPAIR OF ALTERNATOR

Rotor

1. INSPECT ROTOR FOR OPEN CIRCUIT

Using an ohmmeter, check for continuity between the slip rings.

Standard resistance: Less than 3 Ω

If there is no continuity, replace the rotor.

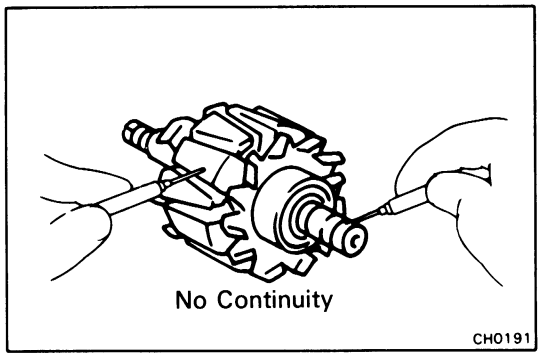

2. INSPECT ROTOR FOR GROUND

Using an ohmmeter, check that there is no continuity between the slip ring and rotor. If there is continuity, replace the rotor.

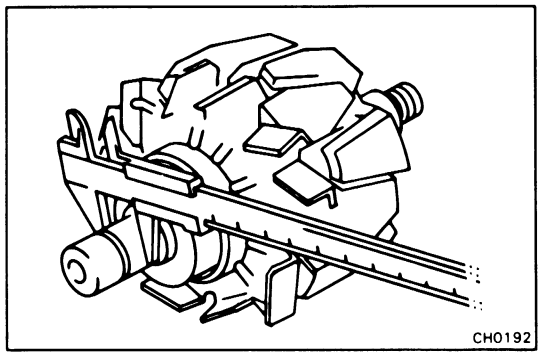

3. INSPECT SLIP RINGS

(a) Check that the slip rings are not rough or scored. If rough or scored, replace the rotor.

(b) Using calipers, measure the slip ring diameter.

Standard diameter: 14.2 – 14.4 mm (0.559 – 0.567 in.)

Minimum diameter: 12.8 mm (0.504 in.)

If the diameter of the slip ring is less than the minimum, replace the rotor.

Stator

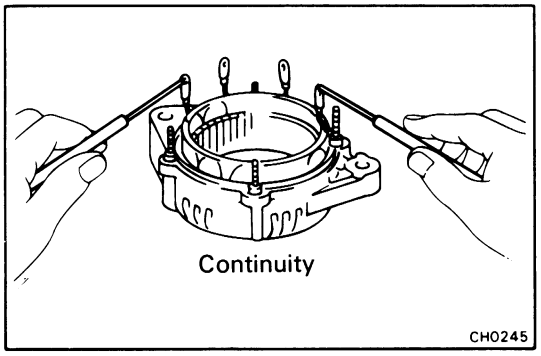

1. INSPECT STATOR FOR OPEN CIRCUIT

Using an ohmmeter, check all leads for continuity. If there is no continuity, replace the drive end frame assembly.

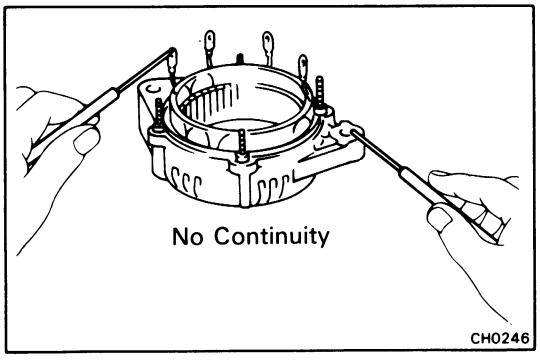

2. INSPECT THAT STATOR IS NOT GROUNDED

Using an ohmmeter, check that there is no continuity between the coil leads and drive end frame.
If there is continuity, replace the drive end frame assembly.

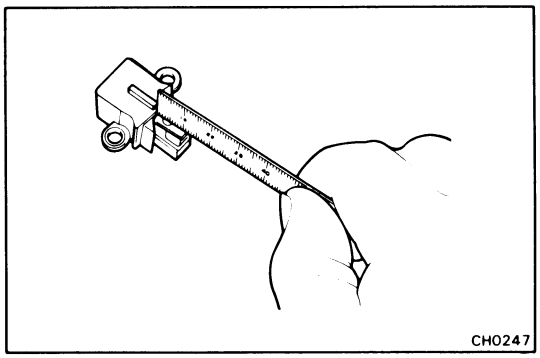

Brush and Brush Holder

1. MEASURE EXPOSED BRUSH LENGTH

Using a scale, measure the exposed brush length.

Standard exposed length: 10.5 mm (0.413 in.)
Minimum exposed length: 1.5 mm (0.059 in.)

If the brush length is less than the minimum, replace the brush.

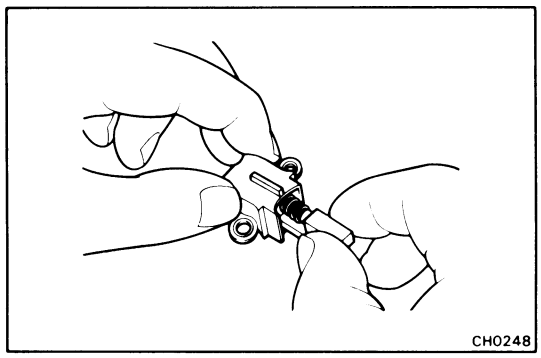

2. IF NECESSARY, REPLACE BRUSH

(a) Unsolder and remove the brush and the spring.

(b) Put the brush wire through the spring and insert the brush holder.

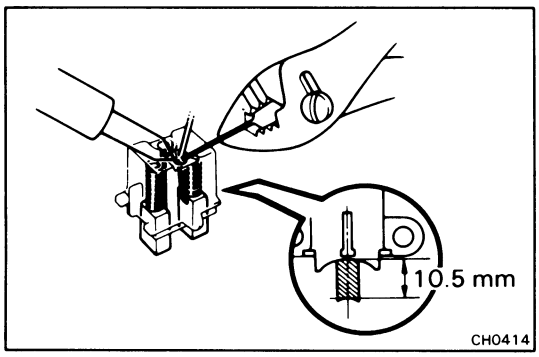

(c) Solder the wire to the brush holder as shown.

Standard exposed length: 10.5 mm (0.413 in.)

(d) Check that the brush moves smoothly in the brush holder.

(e) Cut off the excess wire.

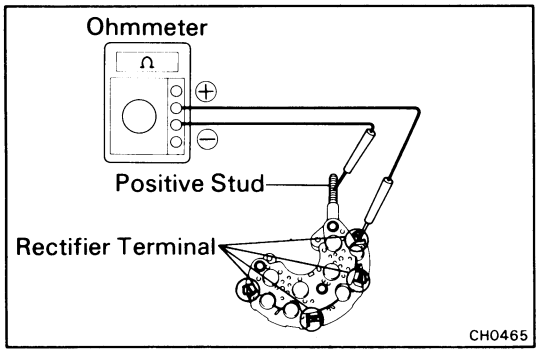

Rectifier

1. INSPECT POSITIVE SIDE RECTIFIER

(a) Using an ohmmeter, connect one tester probe to the positive stud and the other to each rectifier terminal.

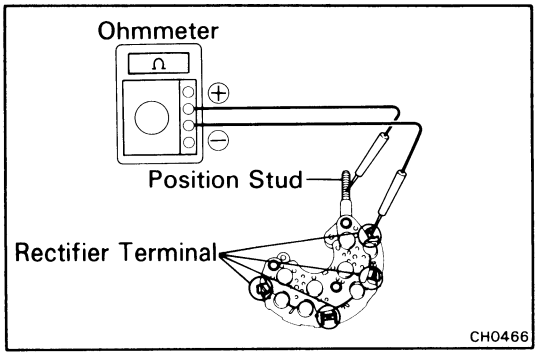

(b) Reverse the polarity of the tester probes and repeat step a.

(c) Check that one shows continuity and the other shows no continuity.

If not, replace the rectifier holder.

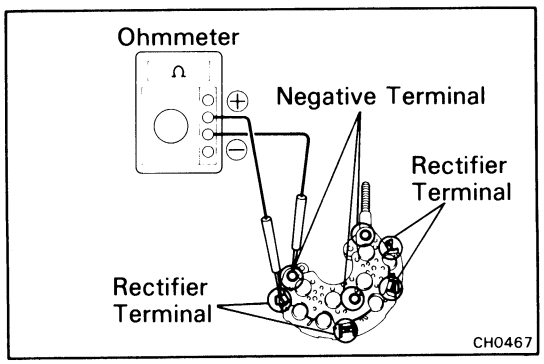

2. INSPECT NEGATIVE SIDE RECTIFIER

(a) Connect one tester probe to each rectifier terminal and the other to each rectifier negative terminal.

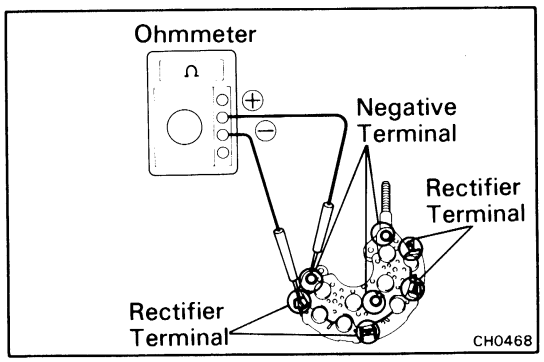

(b) Reverse the polarity of the tester probes.

(c) Check that one shows continuity and the other shows no continuity.

If not, replace the rectifier holder.

Bearings

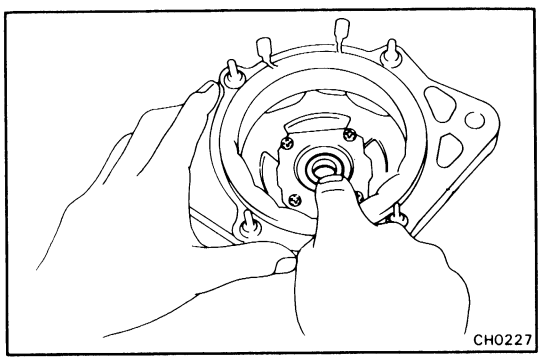

1. INSPECT FRONT BEARING

Check that the bearing is not rough or worn.

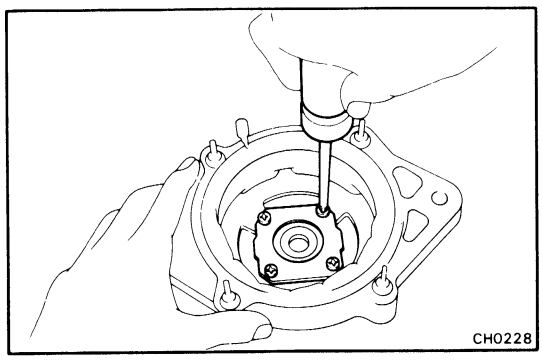

2. IF NECESSARY, REPLACE FRONT BEARING

(a) Remove the four screws and bearing retainer.

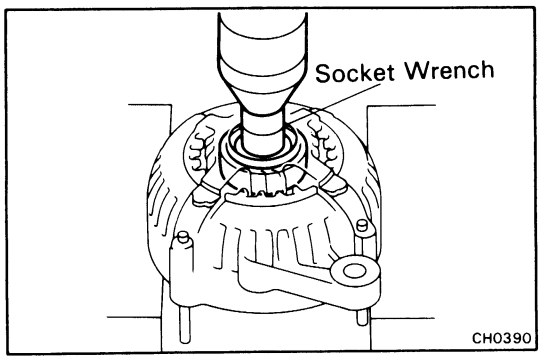

(b) Using a press and socket wrench, press out the front bearing.

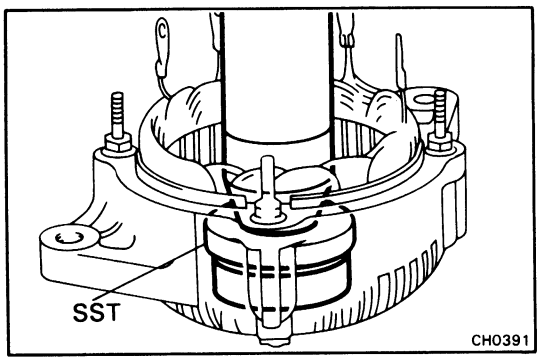

(c) Using SST and a press, press the front bearing into the drive end frame.

SST 09608-20012 (09608-00030)

(d) Install the bearing retainer with the four screws.

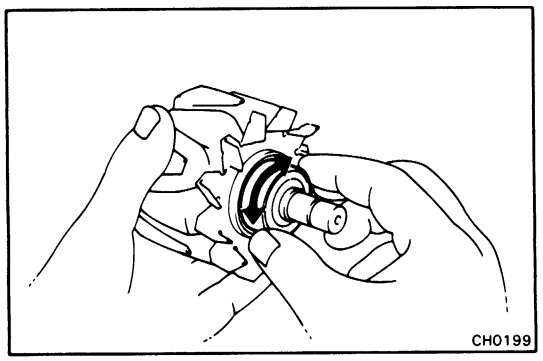

3. INSPECT REAR BEARING

Check that the bearing is not rough or worn.

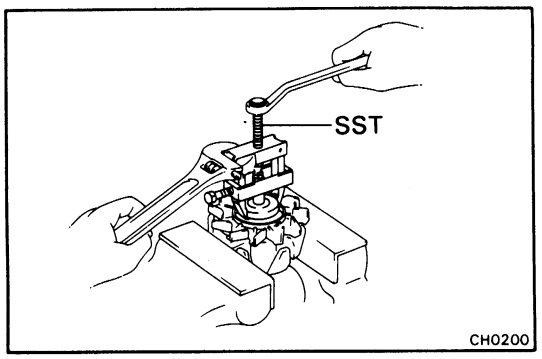

4. IN NECESSARY, REPLACE REAR BEARING

(a) Using SST, remove the rear bearing cover and cover.

SST 09820-00021

CAUTION: Be careful not to damage the fan.

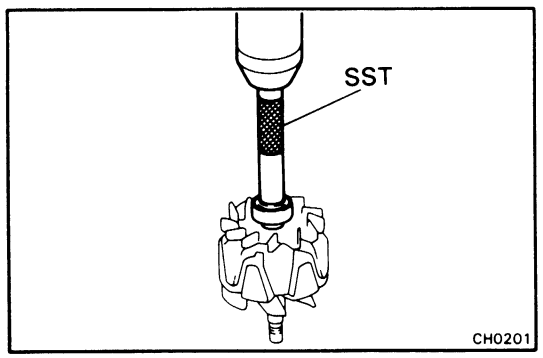

(b) Using SST and a press, press in a new bearing and the bearing cover.

SST 09285-76010

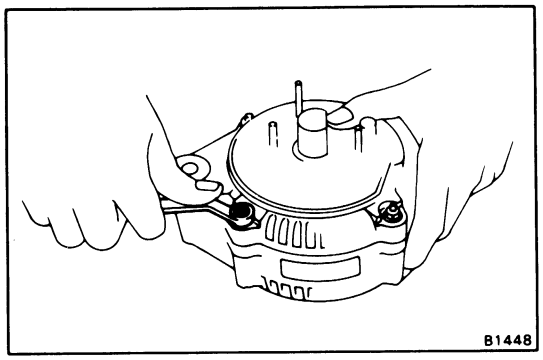

ASSEMBLY OF ALTERNATOR

(See page CH-6)

1. INSTALL ROTOR TO DRIVE END FRAME

2. INSTALL REAR END FRAME

(a) Using a plastic hammer, lightly tap the rear end frame on the drive end frame.

(b) Install the four nuts.

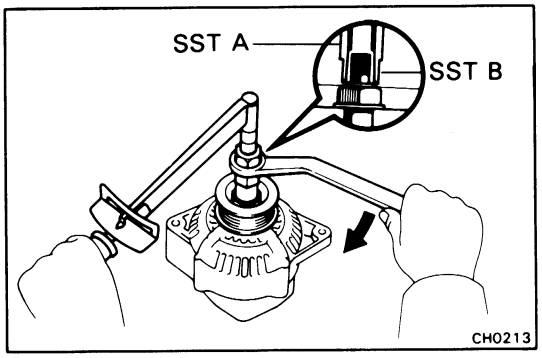

3. INSTALL PULLEY

(a) Install the pulley to the rotor shaft by tightening the pulley nut by hand.

(b) Hold SST A with a torque wrench and tighten SST B clockwise to the specified torque.

SST 09820-63010

Torque: 400 kg-cm (29 ft-lb, 39 N·m)

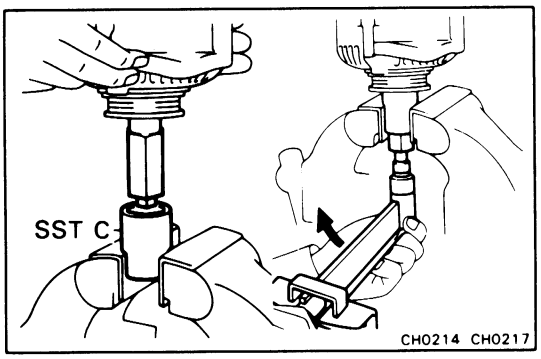

(c) Confirm that SST A is secured to the pulley shaft.

(d) As shown in the figure, grip SST C in a vise and then install the alternator to SST C.

(e) To torque the pulley nut turn SST A in the direction shown in the figure.

Torque: 1,125 kg-cm (81 ft-lb, 110 N·m)

(f) Turn SST B and remove all SSTs.

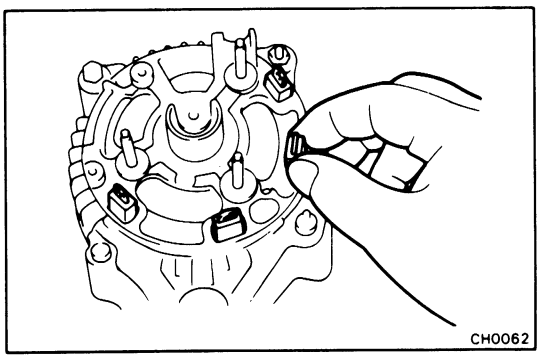

4. INSTALL RECTIFIER HOLDER

(a) Install the four rubber insulators on the lead wires.

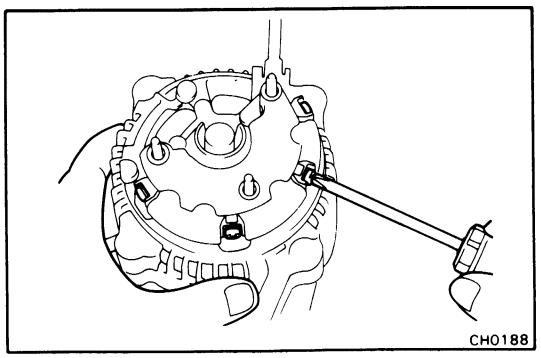

(b) Install the rectifier with four screws.

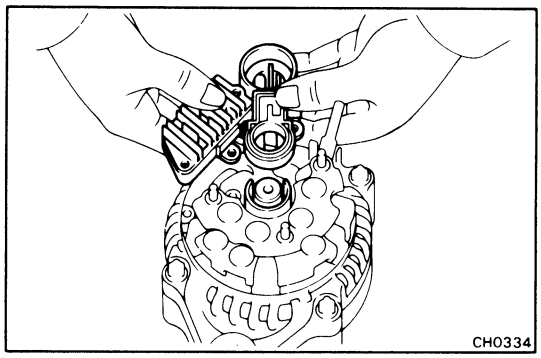

5. **(4A-GE)**
INSTALL BRUSH HOLDER AND IC REGULATOR

(a) Place the brush holder cover to the brush holder.

(b) Install the IC regulator and brush holder to the rear end frame horizontally as shown in the figure.

NOTE: Make sure the brush holder's cover doesn't slip to one side during installation.

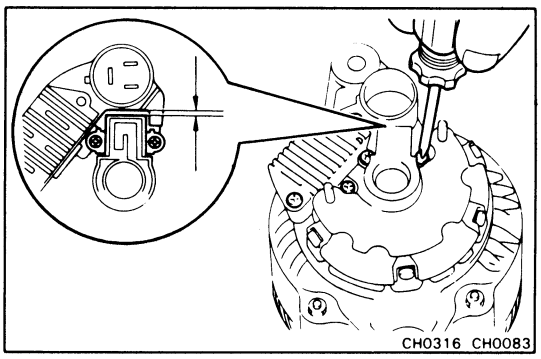

(c) Install and tighten the three screws.

NOTE: Make sure the gap between the brush holder and connector is at least 1 mm (0.04 in.).

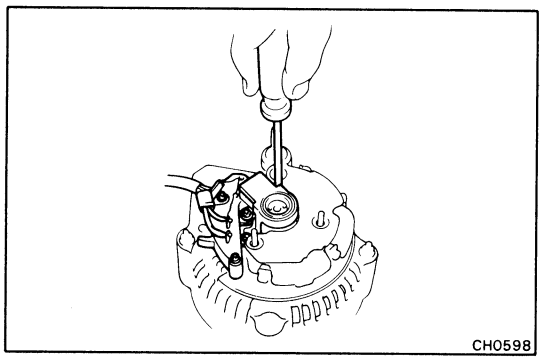

6. **(4A-GZE)**
INSTALL BRUSH HOLDER AND LEAD WIRE

(a) Place the brush holder cover to the brush holder.

(b) Install the lead wire and brush holder to the rear end frame horizontally as shown in the figure.

NOTE: Make sure the brush holder's cover doesn't slip to one side during installation.

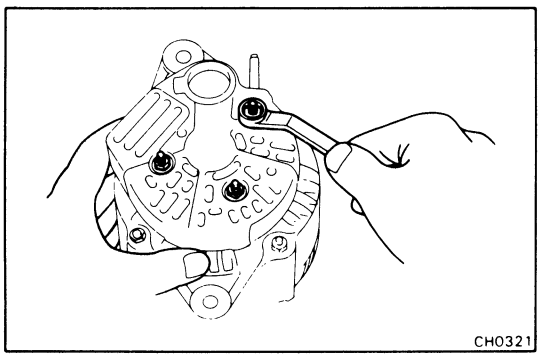

7. **INSTALL REAR END COVER**

(a) Install the end cover with the three nuts.

(b) Install the terminal insulator with the nut.

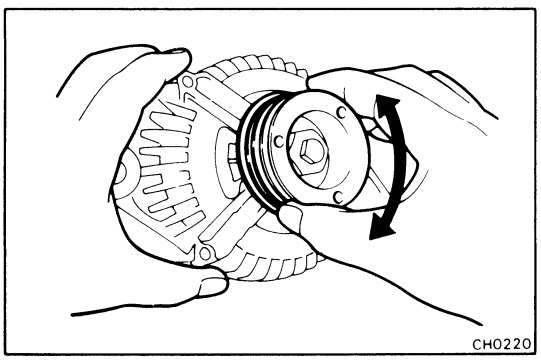

8. **MAKE SURE ROTOR ROTATES SMOOTHLY**

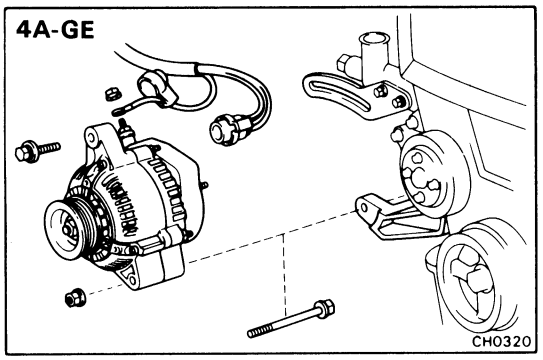

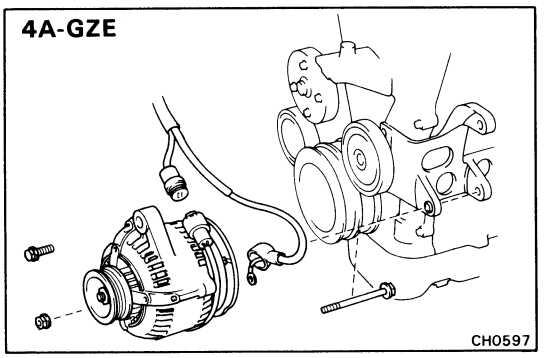

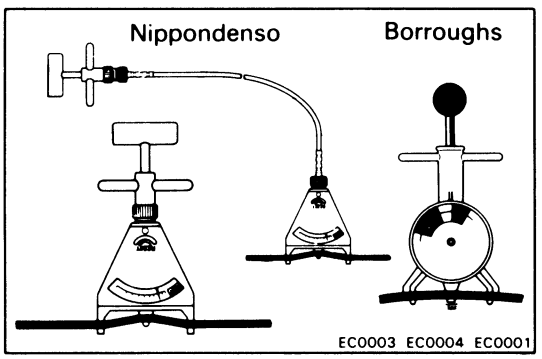

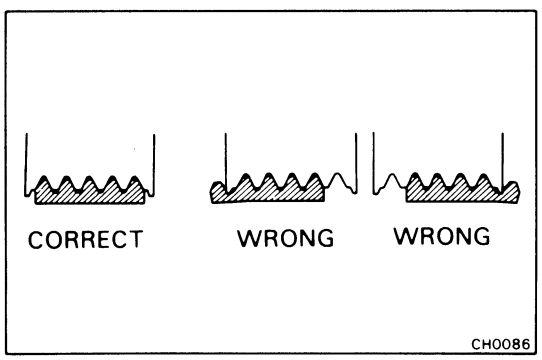

INSTALLATION OF ALTERNATOR

1. INSTALL ALTERNATOR

Mount the alternator on the engine bracket with the pivot nut, bolt and adjusting lock bolts.

Do not tighten the bolts.

2. CONNECT WIRING TO ALTERNATOR

(a) Connect the wire to the alternator and install the nut.

(b) Connect the connector to the alternator.

3. CONNECT NEGATIVE CABLE TO BATTERY

4. INSTALL ALTERNATOR DRIVE BELT

(a) Install the drive belt.

(b) Using a belt tension gauge, check the drive belt tension.

Belt tension gauge:

Nippondenso	BTG-20 (95506-00020) or
Borroughs	No. BT-33-73F

Drive belt tension:	**New belt**	**175 ± 5 lb**
	Used belt	**115 ± 20 lb**

NOTE:

- "New belt" refers to a belt which has been used less than 5 minutes on a running engine.
- "Used belt" refers to a belt which has been used on a running engine for 5 minutes or more.
- After installing the drive belt, check that it fits, properly in the ribbed grooves.

(c) Tighten the pivot bolt.

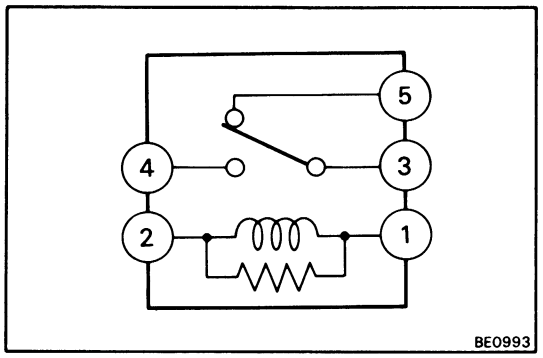

ENGINE MAIN RELAY

INSPECTION OF ENGINE MAIN RELAY

INSPECT ENGINE MAIN RELAY

NOTE: The relay is located in the No. 2 junction block of the engine compartment.

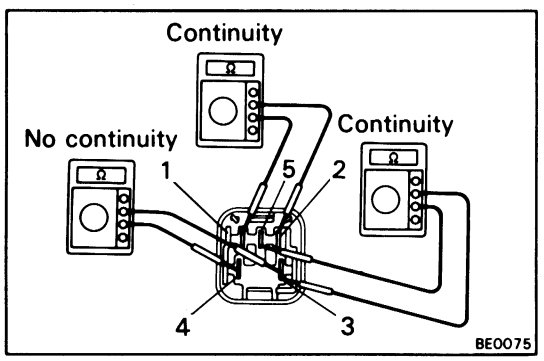

Inspect Relay Continuity

(a) Using an ohmmeter, check that there is continuity between terminals 1 and 2.

(b) Check that there is continuity between terminals 3 and 5.

(c) Check that there is no continuity between terminals 3 and 4.

If continuity is not as specified, replace the relay.

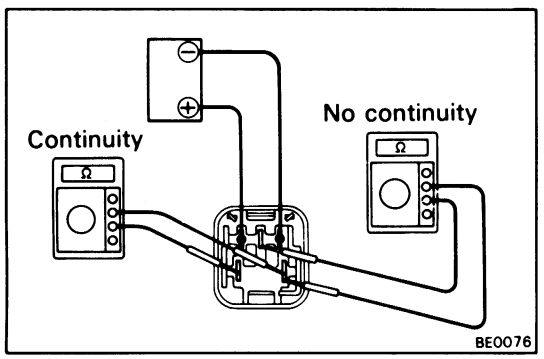

Inspect Relay Operation

(a) Apply battery voltage across terminals 1 and 2.

(b) Using an ohmmeter, check that there is continuity between terminals 3 and 4.

(c) Check that there is no continuity between terminals 3 and 5.

If operation is not as described, replace the relay.

CLUTCH

	Page
TROUBLESHOOTING	CL-2
CHECK AND ADJUSTMENT OF CLUTCH PEDAL	CL-3
BLEEDING OF CLUTCH SYSTEM	CL-3
INSPECTION OF CLUTCH START SYSTEM	CL-4
CLUTCH MASTER CYLINDER	CL-5
CLUTCH RELEASE CYLINDER	CL-9
CLUTCH UNIT	CL-12

TROUBLESHOOTING

Problem	Possible cause	Remedy	Page
Hard to shift or will not shift	Clutch pedal freeplay excessive	Adjust pedal freeplay	CL-3
	Air in clutch lines	Bleed clutch system	CL-3
	Clutch release cylinder faulty	Repair release cylinder	CL-9
	Clutch master cylinder faulty	Repair master cylinder	CL-5
	Clutch disc out of true, runout is excessive or lining broken	Inspect clutch disc	CL-12
	Splines on input shaft or clutch disc dirty or burred	Repair as necessary	CL-12
	Clutch pressure plate faulty	Replace clutch cover	CL-12
Clutch slips	Clutch pedal freeplay insufficient	Adjust pedal freeplay	CL-3
	Clutch disc lining oily or worn out	Inspect clutch disc	CL-12
	Pressure plate faulty	Replace clutch cover	CL-12
	Release fork binding	Inspect release fork	CL-12
Clutch grabs/ chatters	Clutch disc lining oily or worn out	Inspect clutch disc	CL-12
	Pressure plate faulty	Replace clutch cover	CL-12
	Clutch diaphragm spring bent	Align clutch diaphragm	CL-12
	Engine mounts loose	Repair as necessary	
Clutch pedal spongy	Air in clutch lines	Bleed clutch system	CL-3
	Clutch release cylinder faulty	Repair release cylinder	CL-9
	Clutch master cylinder faulty	Repair master cylinder	CL-5
Clutch noisy	Loose part inside housing	Repair as necessary	
	Release bearing worn or dirty	Replace release bearing	CL-12
	Release fork or linkage sticks	Repair as necessary	

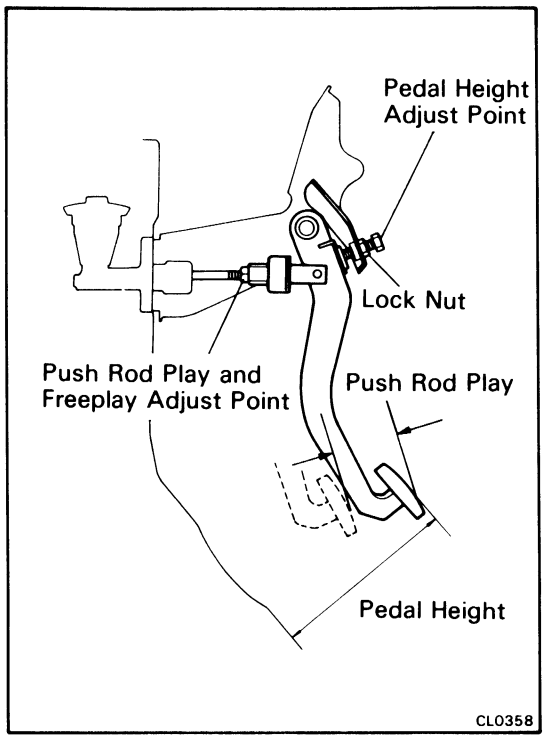

CHECK AND ADJUSTMENT OF CLUTCH PEDAL

1. CHECK THAT PEDAL HEIGHT IS CORRECT

Pedal height: 157 – 167 mm (6.18 – 6.57 in.)

2. IF NECESSARY, ADJUST PEDAL HEIGHT

(a) Remove the instrument lower finish panel and air duct.

(b) Loosen the lock nut and turn the stopper bolt until the height is correct. Tighten the lock nut.

3. CHECK THAT PEDAL FREEPLAY AND PUSH ROD PLAY ARE CORRECT

Push in on the pedal until the beginning of clutch resistance is felt.

Pedal freeplay: 5.0 – 15.0 mm (0.197 – 0.591 in.)
Push rod play at pedal top:
1.0 – 5.0 mm (0.039 – 0.197 in.)

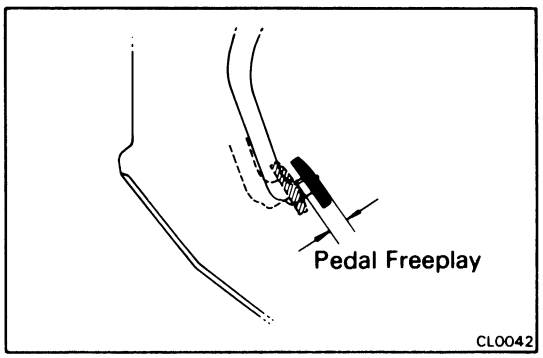

4. IF NECESSARY, ADJUST PEDAL FREEPLAY AND PUSH ROD PLAY

(a) Loosen the lock nut and turn the push rod until the freeplay and push rod play are correct.

(b) Tighten the lock nut.

(c) After adjusting the pedal freeplay, check the pedal height.

(d) Install the air duct and instrument lower finish panel.

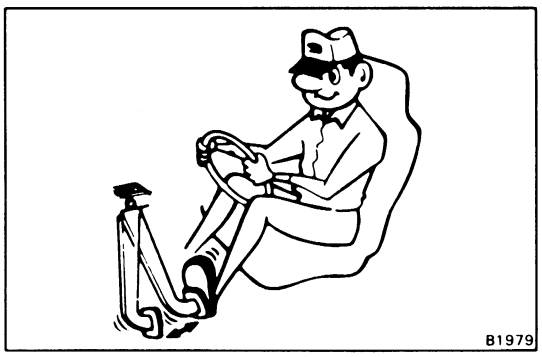

BLEEDING OF CLUTCH SYSTEM

NOTE: If any work is done on the clutch system or if air is suspected in the clutch lines, bleed the system of air.

CAUTION: DO NOT let brake fluid remain on a painted surface. Wash it off immediately.

1. FILL CLUTCH RESERVOIR WITH BRAKE FLUID

Check the reservoir frequently. Add fluid if necessary.

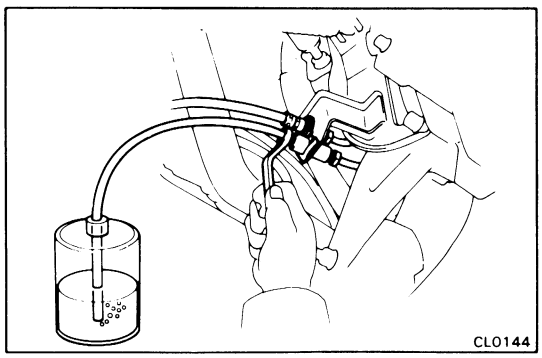

2. CONNECT VINYL TUBE TO BLEEDER PLUG

Insert the other of the tube in a half-filled container of brake fluid.

3. BLEED CLUTCH LINE

(a) Slowly pump the clutch pedal several times.

(b) While depressing the pedal, loosen the bleeder plug until the fluid starts to run out. Then close the bleeder plug.

(c) Repeat this procedure until there are no more air bubbles in the fluid.

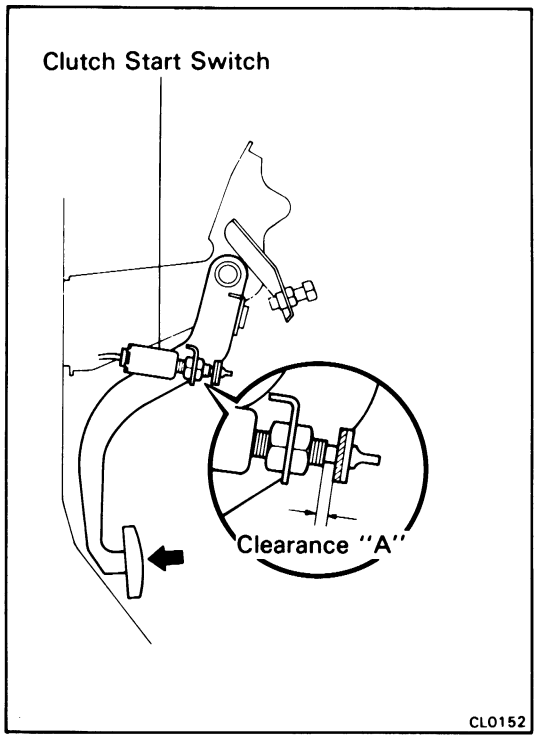

INSPECTION OF CLUTCH START SYSTEM

CHECK CLUTCH PEDAL

1. **CHECK THAT PEDAL HEIGHT IS CORRECT (See page CL-3)**

2. **CHECK THAT PEDAL FREEPLAY AND PUSH ROD PLAY ARE CORRECT (See page CL-3)**

CHECK CLUTCH START SYSTEM

CHECK CLUTCH START SYSTEM

(a) Check that the engine does not start when the clutch pedal is released.

(b) Check that the engine starts when the clutch pedal is fully depressed.

(c) Check that clearance "A" is greater than 1 mm (0.04 in.) when the clutch is fully depressed.

If necessary, adjust or replace the clutch start switch.

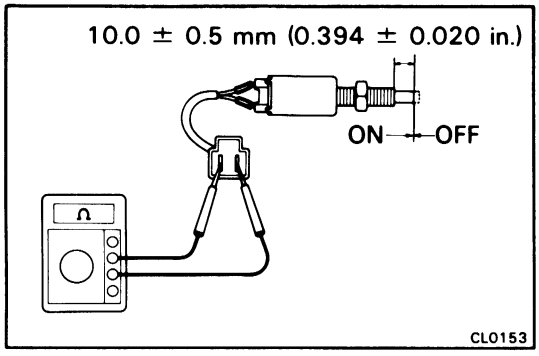

INSPECTION AND ADJUSTMENT OF CLUTCH START SWITCH

1. **INSPECT CONTINUITY OF CLUTCH START SWITCH**

(a) Check that there is continuity between terminals when the switch is ON (pushed).

(b) Check that there is no continuity between terminals when the switch is OFF (free).

If continuity is not as specified, replace the switch.

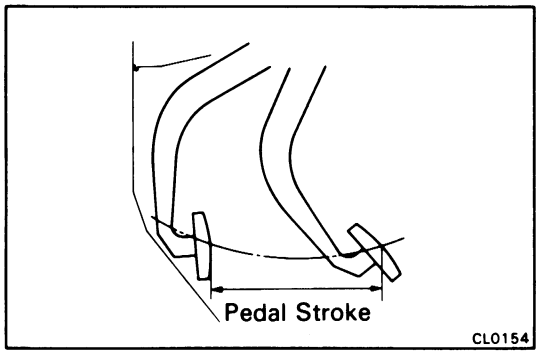

2. **ADJUST CLUTCH START SWITCH**

(a) Measure the pedal stroke, and check the switch clearance "A" using the chart left.

(b) Loosen and adjust the switch position.

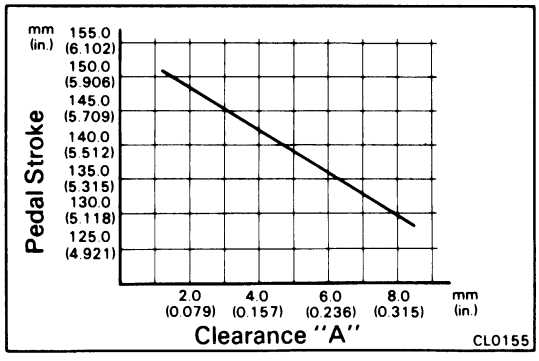

(c) Recheck that the engine does not start when the clutch pedal is released.

CLUTCH MASTER CYLINDER

COMPONENTS

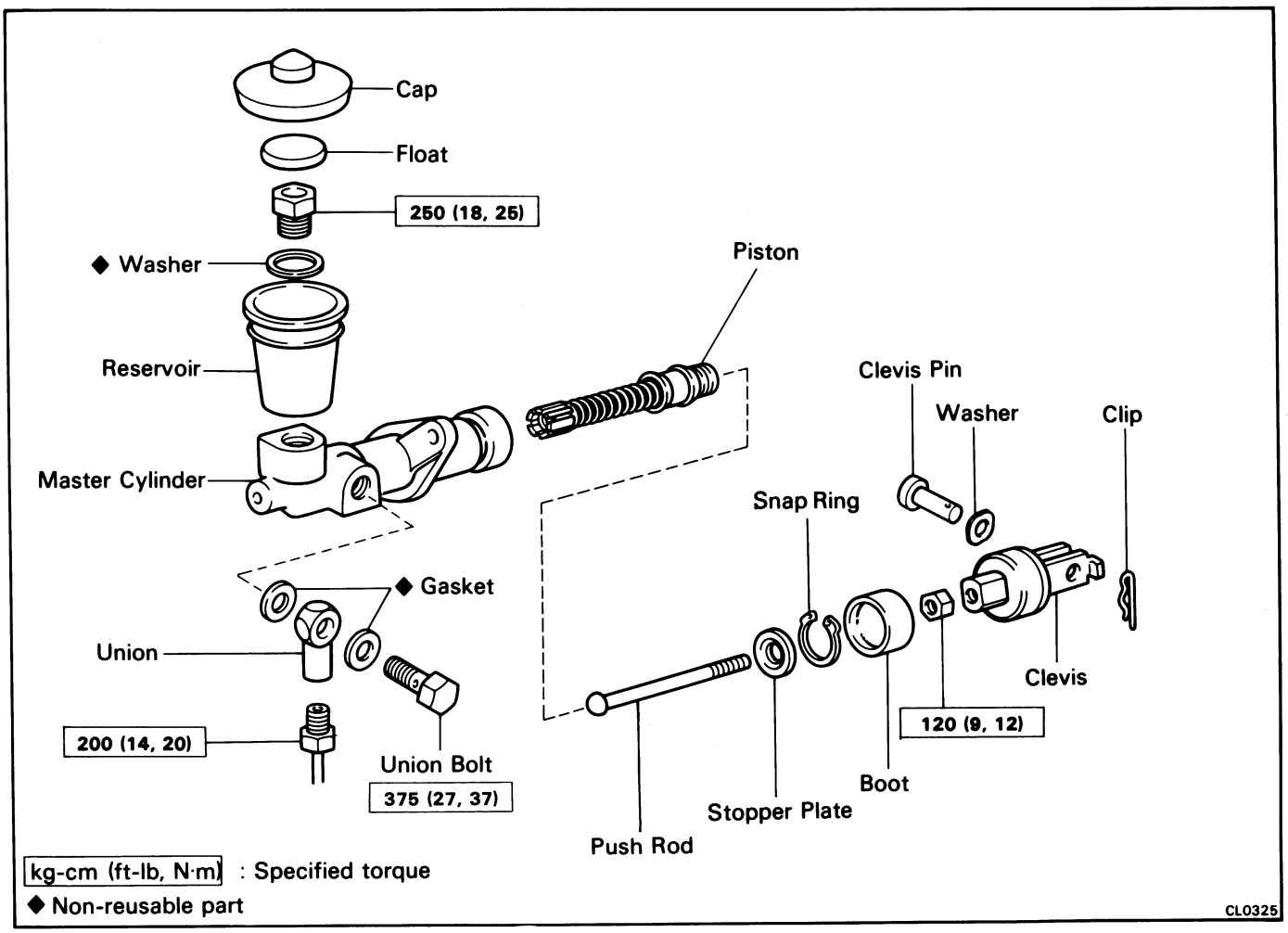

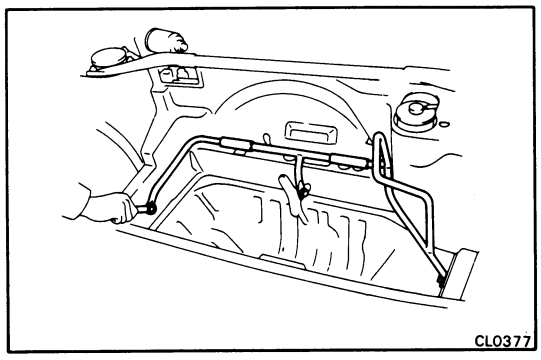

REMOVAL OF MASTER CYLINDER

1. **(4A-GZE)**
   REMOVE SPARE WHEEL GUARD

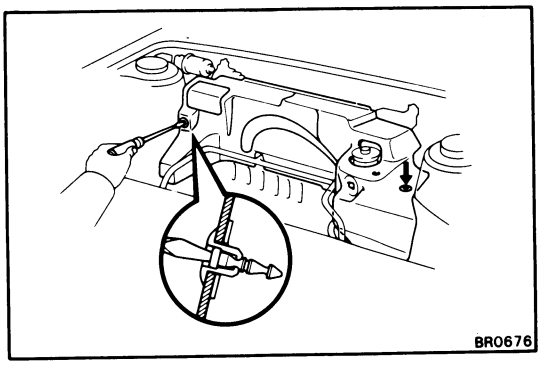

2. **REMOVE LUGGAGE COMPARTMENT TRIM COVER**
   Using a screwdriver, pry out the clips.

3. **DRAW OUT FLUID WITH SYRINGE**

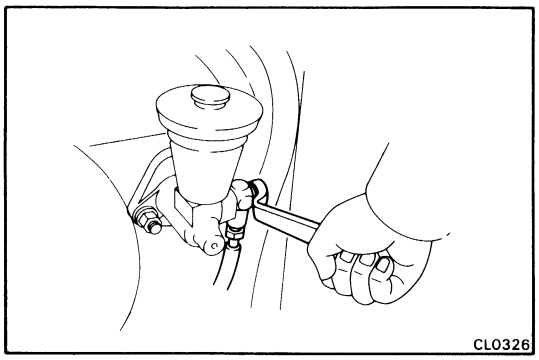

4. DISCONNECT CLUTCH LINE TUBE

Remove the union bolt and disconnect the clutch line. Use a container to catch the fluid.

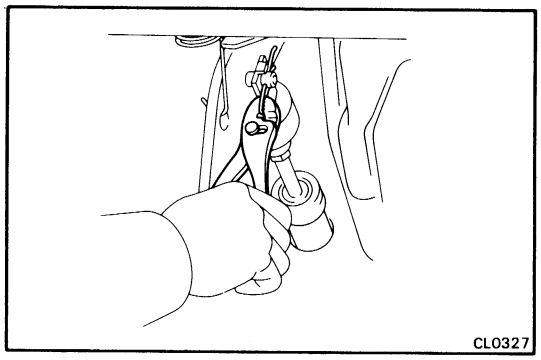

5. REMOVE CLEVIS PIN AND CLIP

Remove the clip and clevis pin.

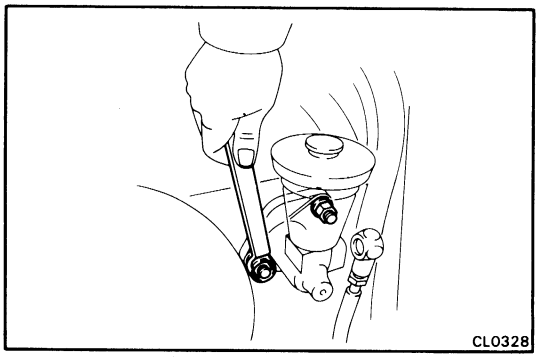

6. REMOVE MASTER CYLINDER

Remove the mounting nuts and remove the master cylinder.

DISASSEMBLY OF MASTER CYLINDER

(See page CL-5)

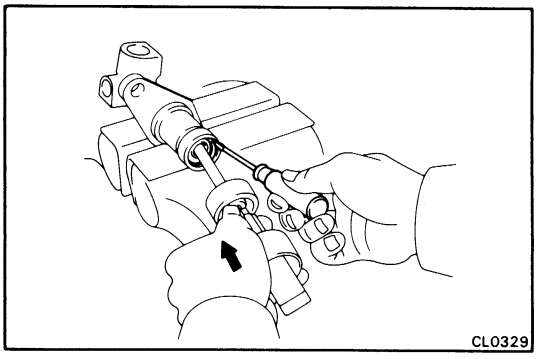

1. REMOVE RESERVOIR TANK

2. REMOVE PUSH ROD ASSEMBLY

(a) Pull back the boot and, using a screwdriver, remove the snap ring.

(b) Pull out the push rod assembly.

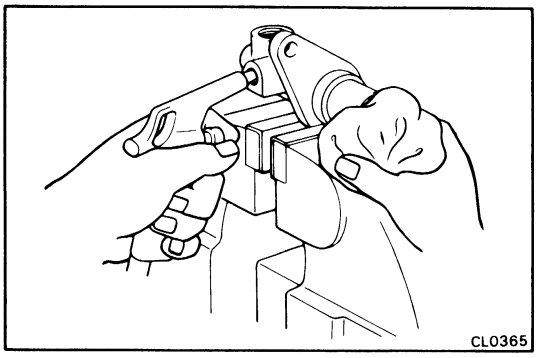

3. REMOVE PISTON

Using compressed air, remove the piston from the cylinder.

INSPECTION OF MASTER CYLINDER

NOTE: Clean the disassembled parts with compressed air.

1. **INSPECT MASTER CYLINDER BORE FOR SCORING OR CORROSION**

   If a problem is found, clean or replace the cylinder.

2. **INSPECT PISTON AND CUPS FOR WEAR, SCORING, CRACKS OR SWELLING**

   If either one requires replacement, use the parts from the cylinder kit.

3. **INSPECT PUSH ROD FOR WEAR OR DAMAGE**

   If necessary, replace the push rod.

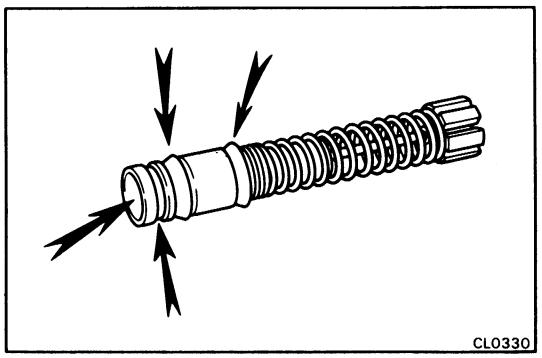

ASSEMBLY OF MASTER CYLINDER

(See page CL-5)

1. **COAT PISTON WITH LITHIUM SOAP BASE GLYCOL GREASE, AS SHOWN**

2. **INSERT PISTON INTO CYLINDER**

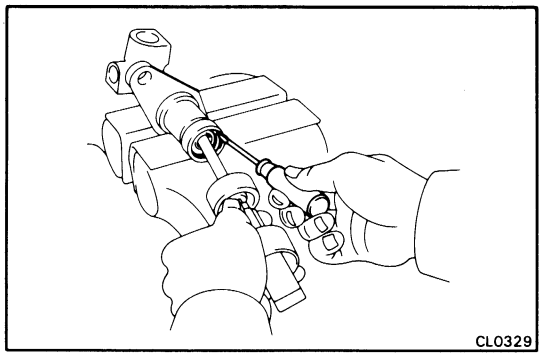

3. **INSTALL PUSH ROD ASSEMBLY**

   Insert and push in the push rod assembly, and using a screwdriver, install the snap ring.

4. **INSTALL RESERVOIR TANK**

   Torque: 250 kg-cm (18 ft-lb, 25 N·m)

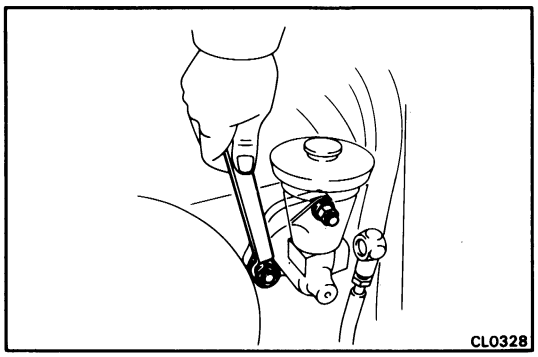

INSTALLATION OF MASTER CYLINDER

(See page CL-5)

1. INSTALL MASTER CYLINDER

Install the master cylinder with two nuts. Tighten the nuts.

Torque: 130 kg-cm (9 ft-lb, 13 N·m)

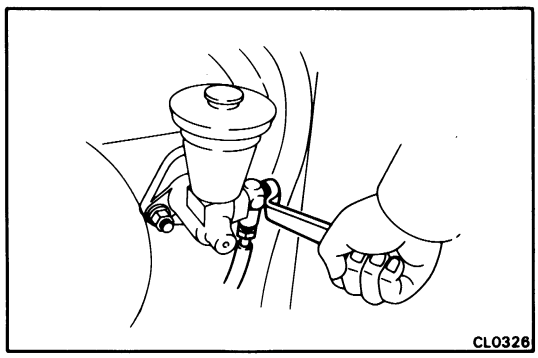

2. CONNECT CLUTCH LINE

Connect the clutch line with a union bolt through the two new gaskets.

Torque: 375 kg-cm (27 ft-lb. 37 N·m)

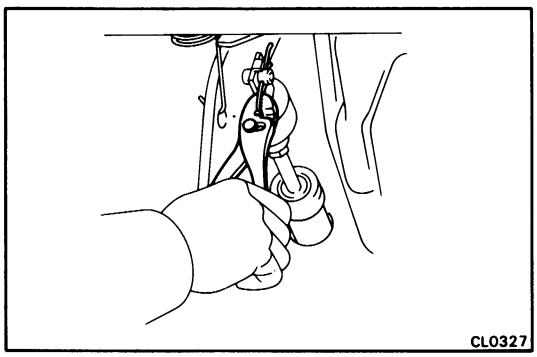

3. CONNECT CLEVIS, AND INSTALL CLEVIS PIN AND CLIP

Secure the clevis pin with the clip.

4. FILL CLUTCH RESERVOIR WITH BRAKE FLUID AND BLEED CLUTCH SYSTEM (See page CL-3)

5. CHECK FOR LEAKS

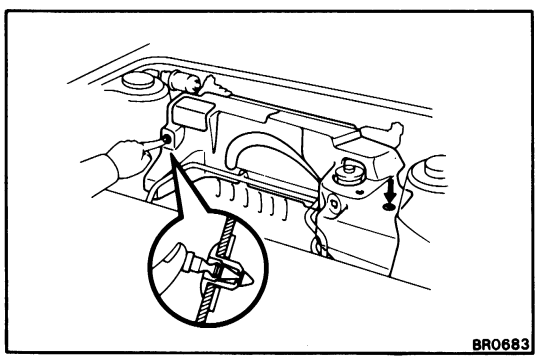

6. INSTALL LUGGAGE COMPARTMENT TRIM COVER

NOTE: To reinstall the clip, pull its center out to the second "waist". Then insert the clip into the hole and press in the center.

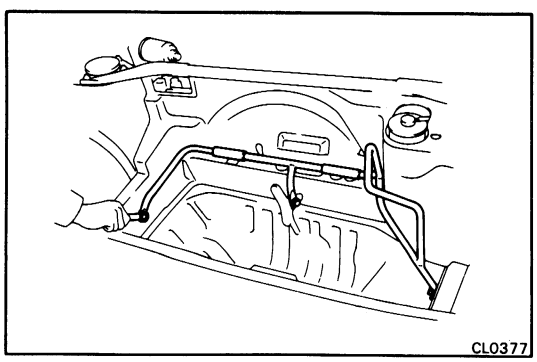

7. (4A-GZE)
INSTALL SPARE WHEEL GUARD

8. CHECK AND ADJUST CLUTCH PEDAL
(See page CL-3)

CLUTCH RELEASE CYLINDER

COMPONENTS

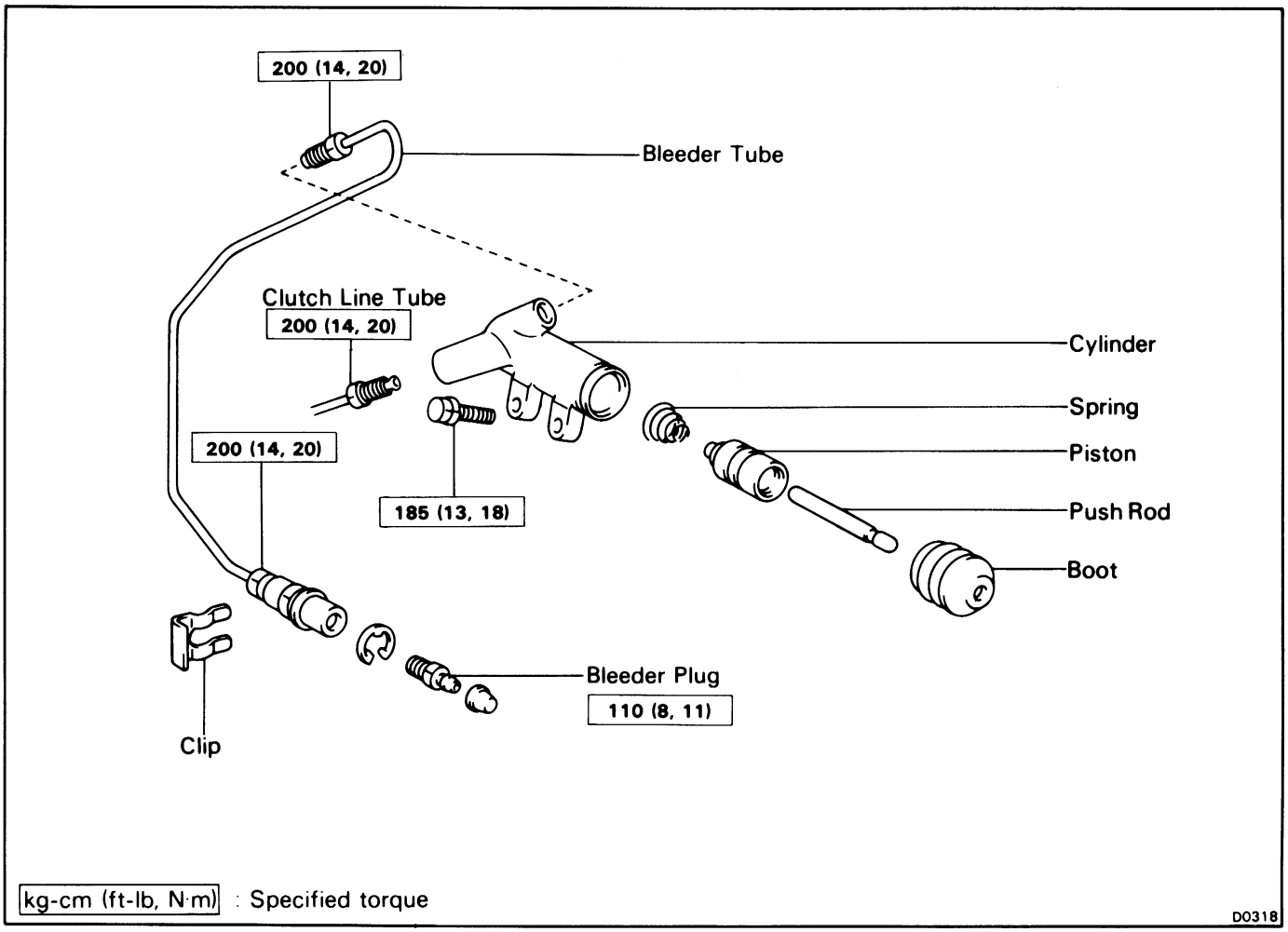

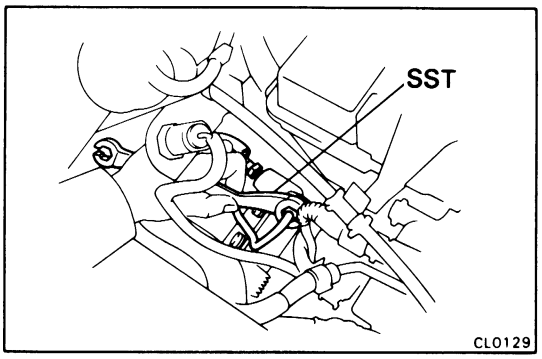

REMOVAL OF RELEASE CYLINDER

1. **DISCONNECT CLUTCH LINE AND BLEEDER TUBES**

   Using SST, disconnect the tubes. Use a container to catch the brake fluid.

   SST 09751-36011

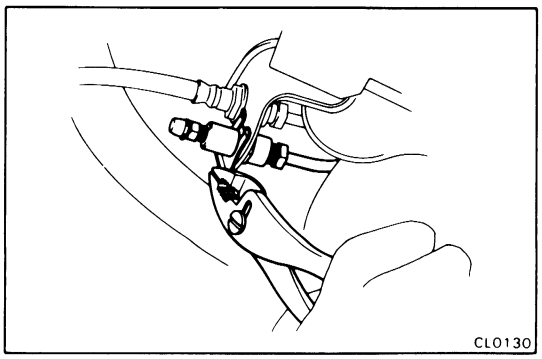

2. **REMOVE BLEEDER TUBE WITH BLEEDER PLUG**

   Remove the clip and bleeder tube with the bleeder plug.

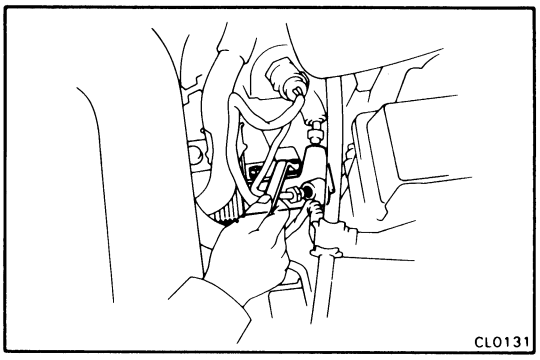

3. **REMOVE TWO BOLTS AND PULL OUT RELEASE CYLINDER**

DISASSEMBLY OF RELEASE CYLINDER

1. **PULL OUT PUSH ROD**
2. **REMOVE BOOT**

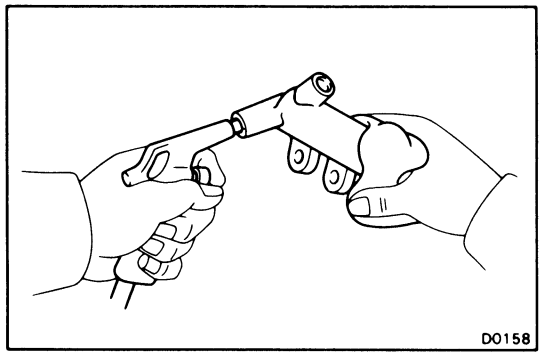

3. **REMOVE PISTON**

   Using compressed air, remove the piston and spring from the cylinder.

INSPECTION OF RELEASE CYLINDER

NOTE: Clean the disassembled parts with compressed air.

1. **INSPECT RELEASE CYLINDER BORE FOR SCORING OR CORROSION**

   If a problem is found, clean or replace the cyliner.

2. **INSPECT PISTON AND CUPS FOR WEAR, SCORING, CRACKS OR SWELLING**

   If either one requires replacement, use the parts from the cylinder kit.

3. **INSPECT PUSH ROD FOR WEAR OR DAMAGE**

   If necessary, replace the push rod.

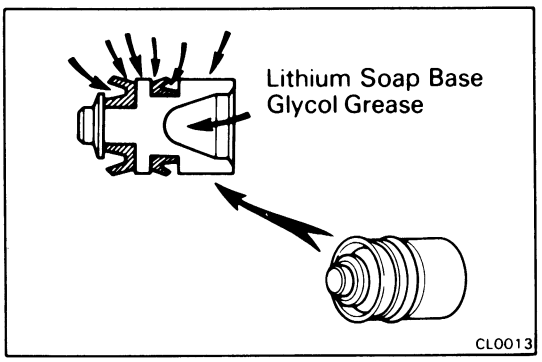

ASSEMBLY OF RELEASE CYLINDER

(See page CL-9)

1. **COAT PISTON WITH LITHIUM SOAP BASE GLYCOL GREASE, AS SHOWN**
2. **INSERT SPRING AND PISTON INTO CYLINDER**
3. **INSTALL BOOT AND INSERT PUSH ROD**

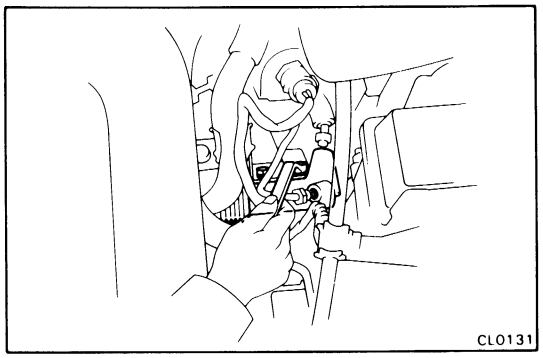

INSTALLATION OF RELEASE CYLINDER

(See page CL-9)

1. **INSTALL RELEASE CYLINDER AND TWO BOLTS**
2. **INSTALL BLEEDER TUBE WITH BLEEDER PLUG**

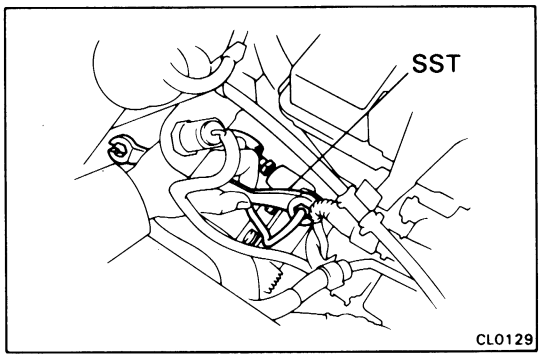

3. **CONNECT CLUTCH LINE AND BLEEDER TUBES**
   Using SST, connect the tubes.
   SST 09751-36011
   Torque: 200 kg-cm (14 ft-lb, 20 N·m)
4. **FILL CLUTCH RESERVOIR WITH BRAKE FLUID AND BLEED CLUTCH SYSTEM**
   (See page CL-3)
5. **CHECK FOR LEAKS**

CLUTCH UNIT

COMPONENTS

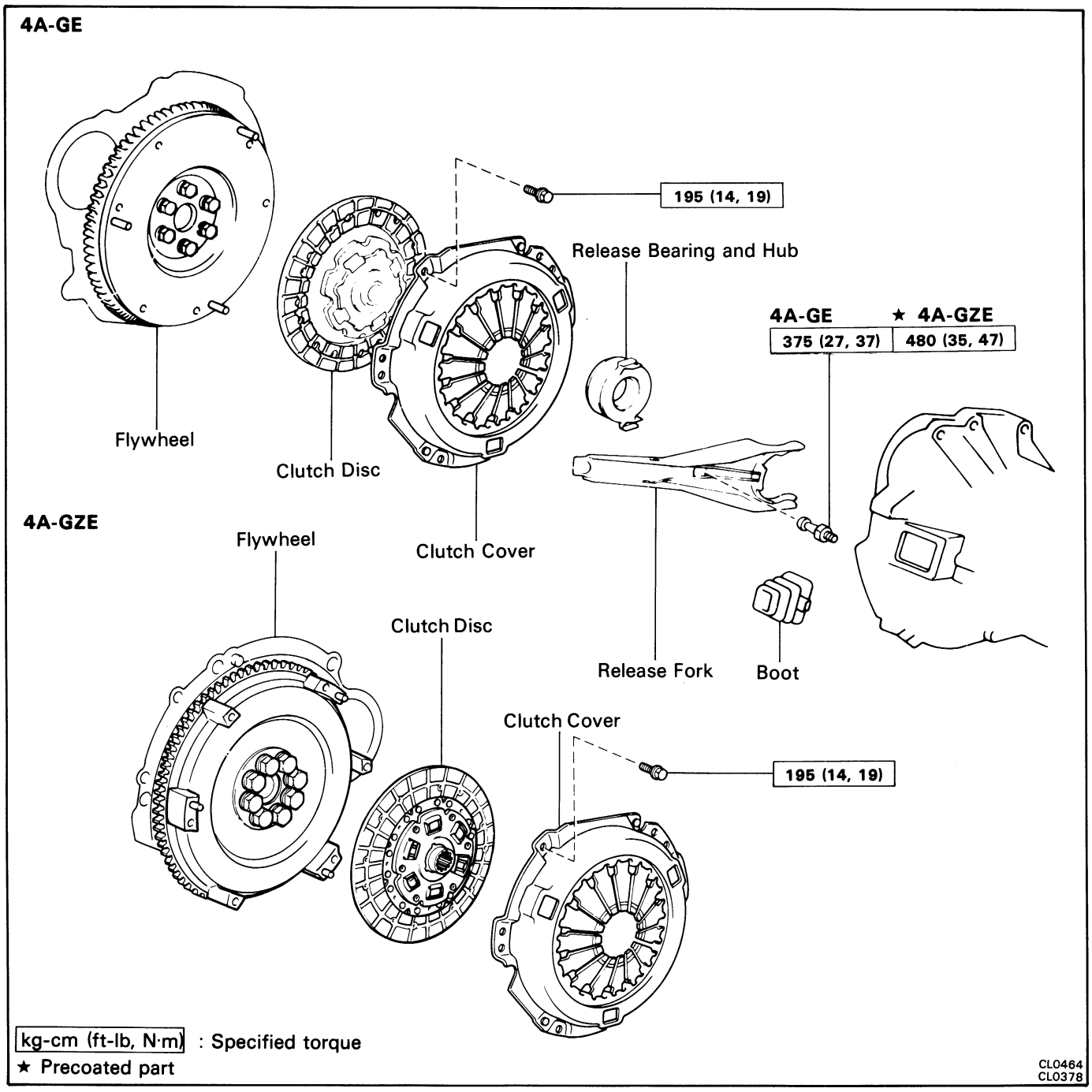

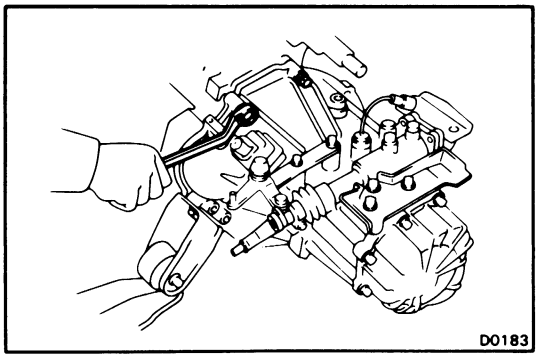

REMOVAL OF CLUTCH UNIT

1. **REMOVE TRANSAXLE FROM ENGINE (See page MT-3)**

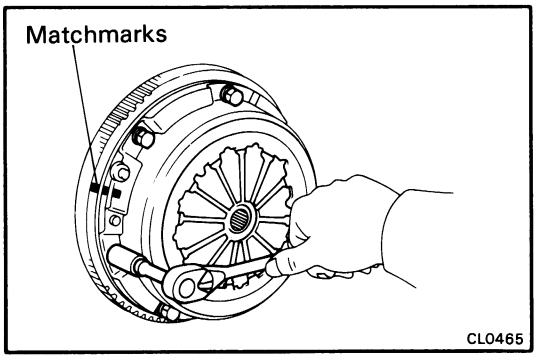

2. REMOVE CLUTCH COVER AND DISC

(a) Place the matchmarks on the clutch cover and flywheel.

(b) Loosen each set bolt one turn at a time until spring tension is released.

(c) Remove the set bolts, and pull off the clutch assembly.

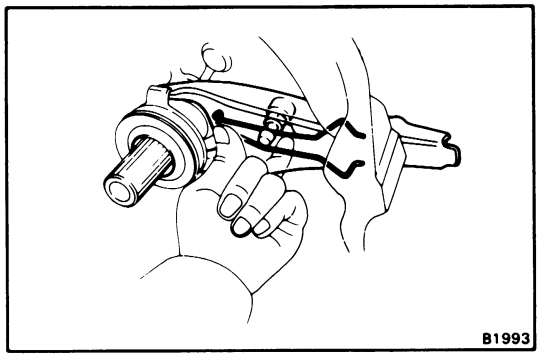

3. REMOVE RELEASE BEARING, FORK AND BOOT FROM TRANSAXLE

(a) Remove the bearing assembly together with the fork, and then separate them.

(b) Remove the boot.

INSPECTION AND REPAIR OF CLUTCH PARTS

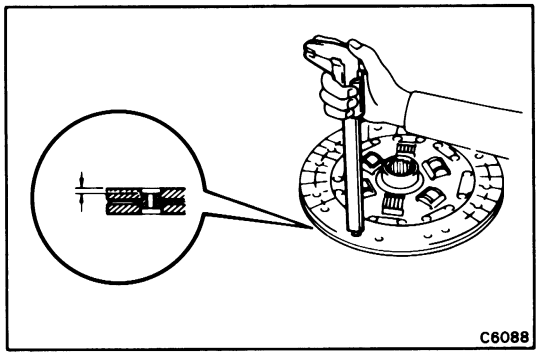

1. INSPECT CLUTCH DISC FOR WEAR OR DAMAGE

Using calipers, measure the rivet head depth.

Minimum rivet depth: 0.3 mm (0.012 in.)

If a problem is found, replace the clutch disc.

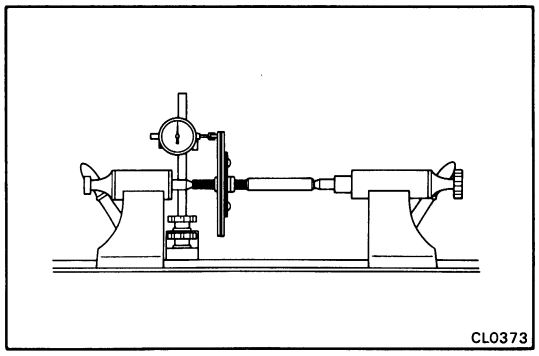

2. INSPECT CLUTCH DISC RUNOUT

Using a dial indicator, check the disc runout.

Maximum runout: 0.8 mm (0.031 in.)

If runout is excessive, replace the clutch disc.

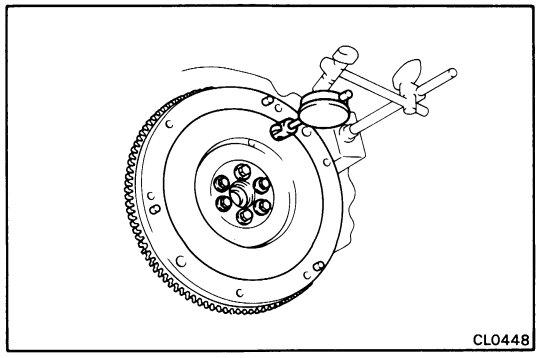

3. INSPECT FLYWHEEL RUNOUT

Using a dial indicator, check the flywheel runout.

Maximum runout: 0.1 mm (0.004 in.)

If runout is excessive, replace the flywheel.

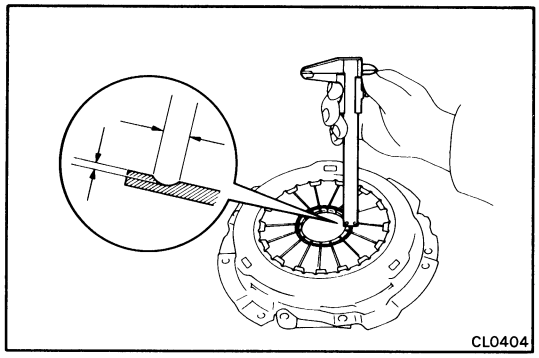

4. INSPECT DIAPHRAGM SPRING FOR WEAR

Using calipers, measure the diaphragm spring for depth and width of wear.

Maximum: Depth 0.6 mm (0.024 in.)
Width 5.0 mm (0.197 in.)

If necessary, replace the clutch cover.

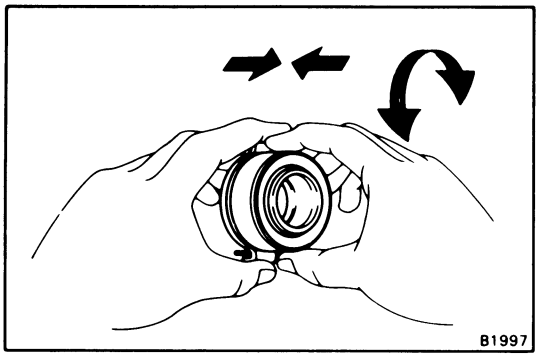

5. INSPECT RELEASE BEARING

Turn the bearing by hand while applying force in the axial direction.

If the bearing sticks or has much resistance, replace the release bearing together with the hub.

NOTE: The bearing is permanently lubricated and requires no cleaning or lubrication.

INSTALLATION OF CLUTCH UNIT

(See page CL-12)

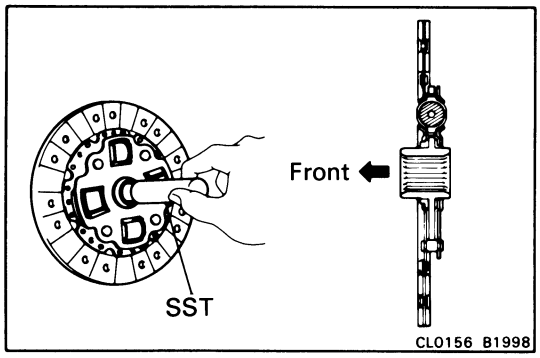

1. INSTALL CLUTCH DISC AND COVER ON FLYWHEEL

(a) Insert the SST in the clutch disc, and then set them and the cover in position.

SST 09301-32010 (4A-GE)
09301-17010 (4A-GZE)

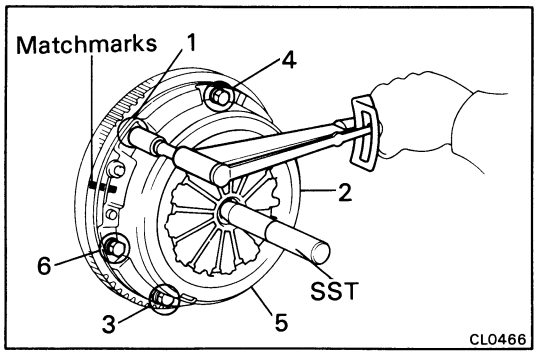

(b) Aligh the matchmarks and position the clutch cover in place. Tighten the bolts evenly and gradually while pushing the SST. Make several passes around the cover until it is snug. Torque the bolts.

Torque: 195 kg-cm (14 ft-lb, 19 N·m)

NOTE: Tighten the topmost bolt from the three near the knock pins first.

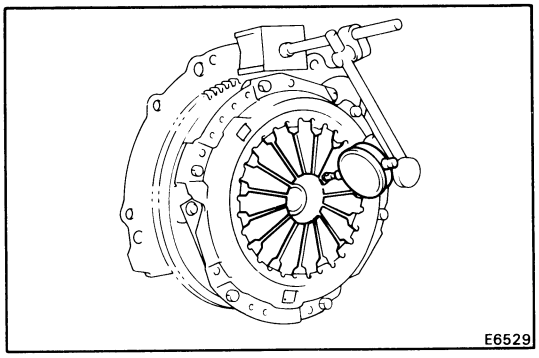

2. CHECK DIAPHRAGM SPRING TIP ALIGNMENT

Using a dial indicator and measuring point, check the diaphragm spring tip alignment.

Maximum non-alignment: 0.5 mm (0.020 in.)

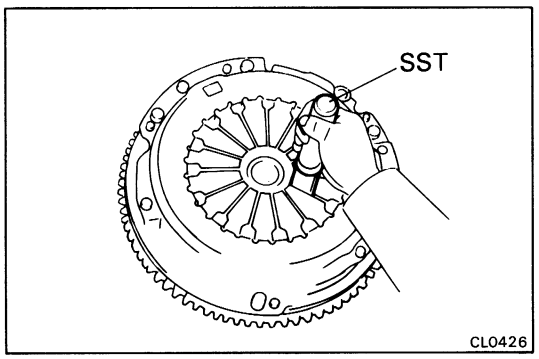

3. IF NECESSARY, ADJUST DIAPHRAGM SPRINGS

Using SST, adjust the diaphragm spring tip alignment.

SST 09333-00013

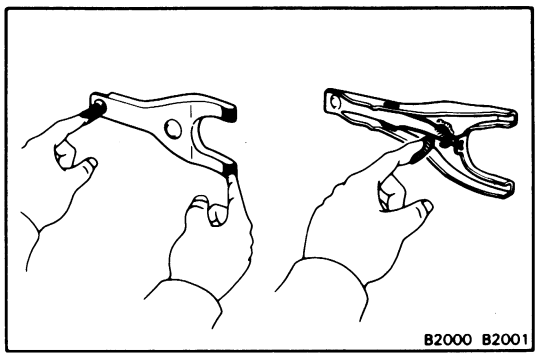

4. APPLY MOLYBDENUM DISULPHIDE LITHIUM BASE GREASE (NLGI NO. 2) TO FOLLOWING PARTS:

(a) Release fork and hub contact point.

(b) Release fork and push contact point.

(c) Release fork pivot point.

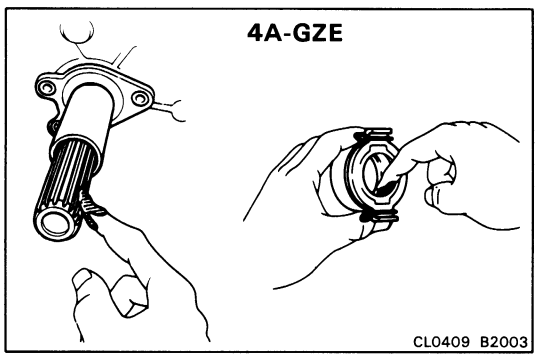

(d) Clutch disc spline.

(e) (4A-GZE)
Release bearing hub inside groove.

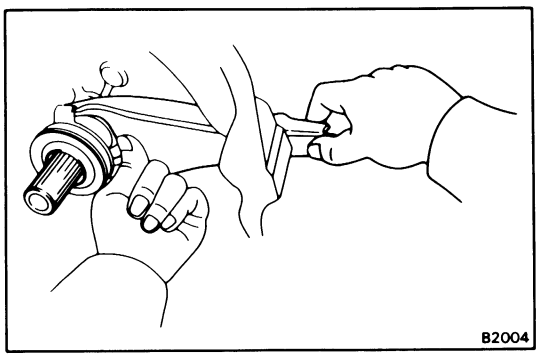

5. INSTALL RELEASE BEARING, FORK AND BOOT FROM TRANSAXLE

(a) Install the bearing assembly to the fork, and then install them to the transaxle.

(b) Install the boot.

6. INSTALL TRANSAXLE TO ENGINE
(See page MT-37)

MANUAL TRANSAXLE

	Page
PRECAUTIONS	MT-2
TROUBLESHOOTING	MT-2
REMOVAL OF TRANSAXLE	MT-3
C52 TRANSAXLE	MT-7
Transmission	MT-7
Components	MT-7
Disassembly of Transmission	MT-10
Inspection of Transmission Components	MT-18
Assembly of Transmission	MT-24
Differential	MT-37
E51 TRANSAXLE	MT-38
Components	MT-38
Removal of Component Parts	MT-41
Inspection of Component Parts	MT-49
Input Shaft Assembly	MT-53
Output Shaft Assembly	MT-59
Oil Pump Assembly	MT-65
Shift and Select Lever Assembly	MT-70
Differential	MT-74
Installation of Component Parts	MT-84
INSTALLATION OF TRANSAXLE	MT-96
SHIFT LEVER AND CONTROL CABLE	MT-100

PRECAUTIONS

When working with FIPG material, you must observe the following.

- **Using a razor blade and gasket scraper, remove all the oil packing (FIPG) material from the gasket surfaces.**
- **Thoroughly clean all components to remove all the loose material.**
- **Clean both sealing surfaces with a non-residue solvent.**
- **Apply the seal packing in approx. 1 mm (0.04 in.) bead along the sealing surface.**
- **Parts must be assembled within 10 minutes of application. Otherwise, the packing (FIPG) material must be removed and reapplied.**

TROUBLESHOOTING

Problem	Possible cause	Remedy	Page
Noise	Transmission or differential faulty	Disassemble and inspect transmission or differential	MT-7 or 37
	Wrong oil grade	Replace oil	MT-38
	Oil level low	Add oil	
Oil leakage	Oil level too high	Drain oil	
	Oil seal, O-ring or gasket worn or damaged	Replace oil seal, O-ring or gasket	MT-7 or MT-38
Hard to shift or will not shift	Control cable faulty	Replace control cable	MT-7 or MT-38
	Transmission faulty	Disassemble and inspect transmission	
Jumps out of gear	Transmission faulty	Disassemble and inspect transmission	MT-7 or MT-38

REMOVAL OF TRANSAXLE

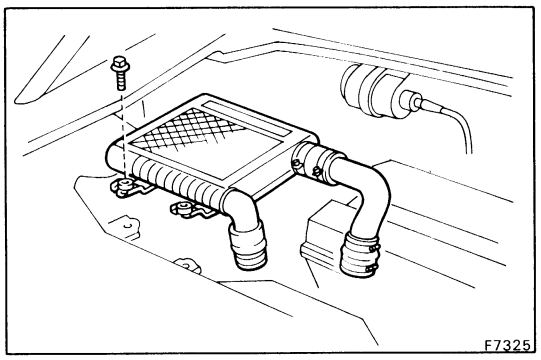

1. REMOVE NEGATIVE BATTERY CABLE

2. DRAIN OUT GEAR OIL

3. (E51 M/T) REMOVE INTERCOOLER

Disconnect the two hose clamps, remove the four bolts and intercooler.

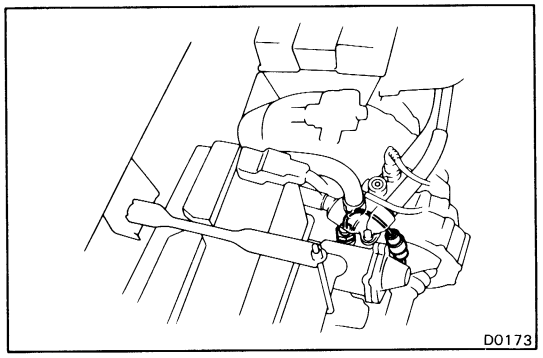

4. DISCONNECT BACK-UP LIGHT SWITCH CONNECTOR

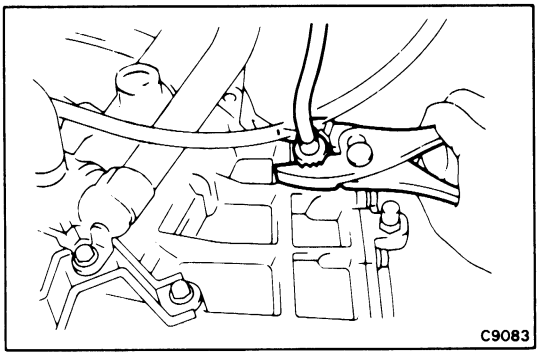

5. REMOVE SPEEDOMETER CABLE

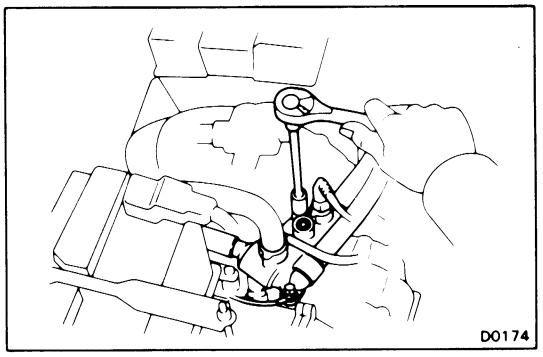

6. REMOVE WATER INLET

(a) Remove the bolts holding the water inlet to the transaxle.

(b) Remove the water inlet from the transaxle.

7. REMOVE ENGINE UNDER COVER

8. REMOVE FUEL TANK PROTECTOR

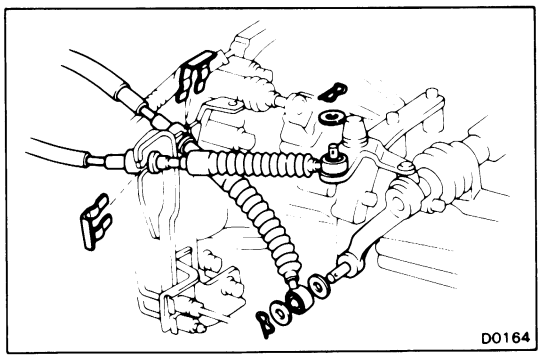

9. DISCONNECT CONTROL CABLES

(a) Remove the two clips.

(b) Remove the two retainers and disconnect two control cables.

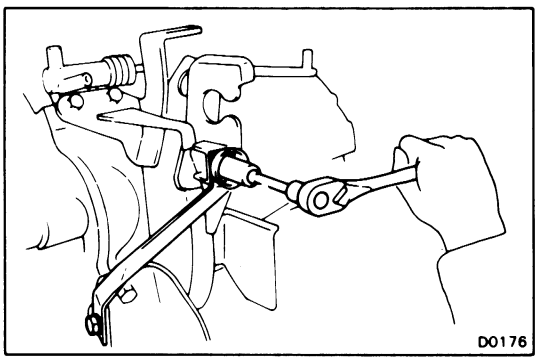

10. REMOVE CONTROL CABLE BRACKET AND CLUTCH RELEASE CYLINDER

(a) Remove the water hose clamp from control cable bracket.

(b) (C52 M/T)
Remove the No. 2 control cable bracket.

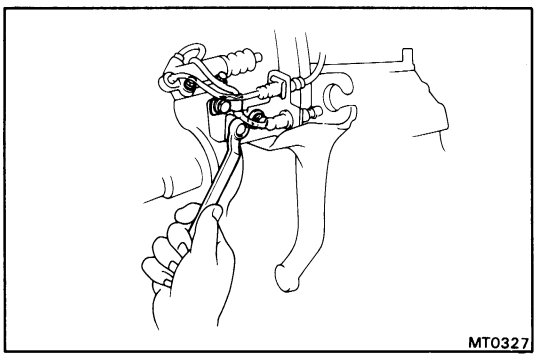

(c) (E51 M/T)
Remove the clutch release cylinder pipe bracket and clamp.

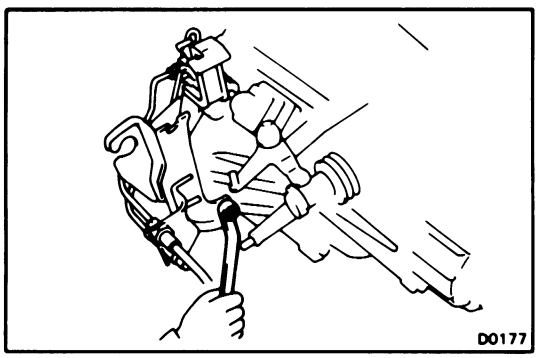

(d) (C52 M/T)
Remove the control cable bracket and clutch release cylinder.

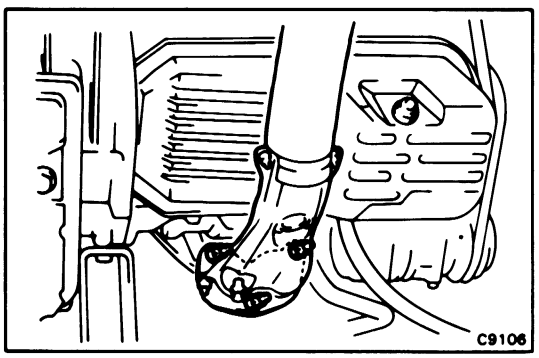

11. REMOVE EXHAUST PIPE ASSEMBLY

(a) Disconnect the exhaust pipe from the exhaust manifold.

(b) Remove the exhaust pipe from the front bracket No. 1.

(c) Remove the O_2 sensor from the exhaust pipe.

(d) Remove the front bracket No. 2 from the body.

(e) Remove the exhaust pipe assembly from the rear bracket.

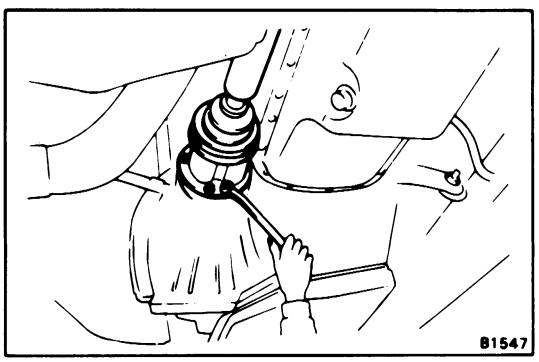

12. DISCONNECT DRIVE SHAFT FROM SIDE GEAR SHAFT

(a) Remove the transaxle protector.

(b) Disconnect the drive shaft from the side gear shaft.

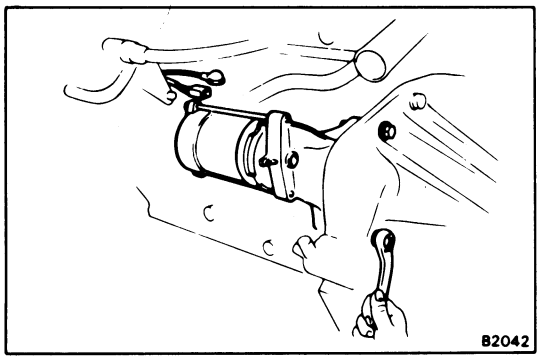

13. REMOVE STARTER

(a) Disconnect the cable and connector.

(b) Remove the starter with the two bolts.

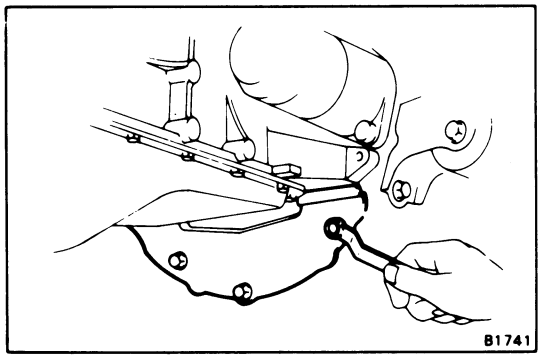

14. REMOVE NO. 2 ENGINE REAR PLATE

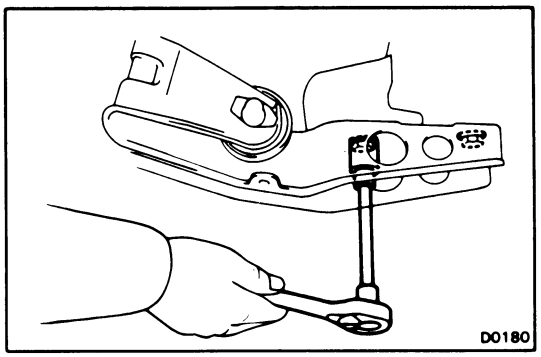

15. REMOVE FRONT ENGINE MOUNTING

Remove the front engine mounting from the body.

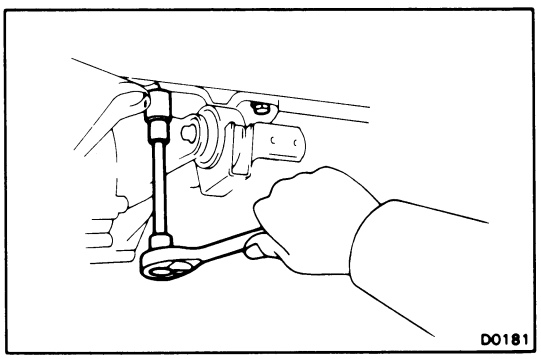

16. REMOVE REAR ENGINE MOUNTING

Remove the rear engine mounting from the body.

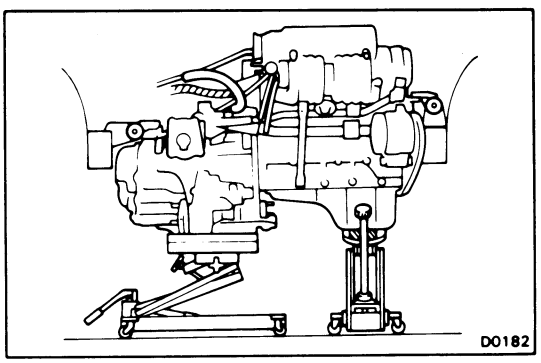

17. REMOVE LEFT ENGINE MOUNTING

(a) Raise the transaxle and engine slightly, with a jack and wooden block in-between.

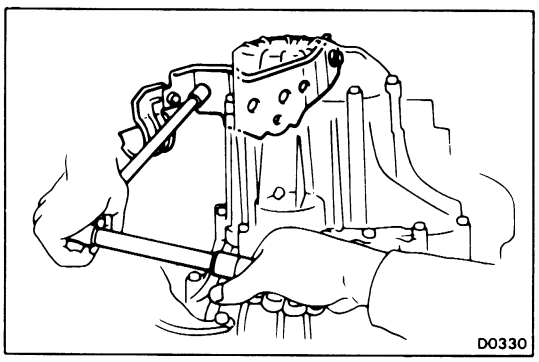

(b) Disconnect the left engine mounting.

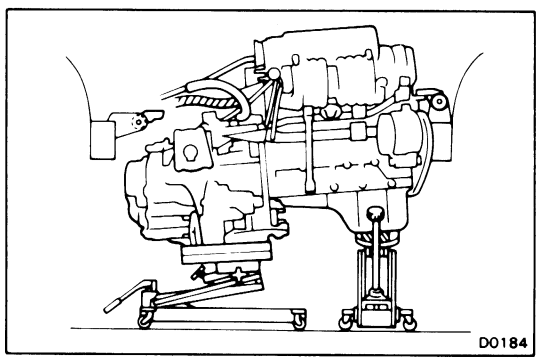

18. REMOVE TRANSAXLE

(a) Disconnect the transaxle mounting bolts from the engine.

(b) Lower the engine left side and remove the transaxle from the engine.

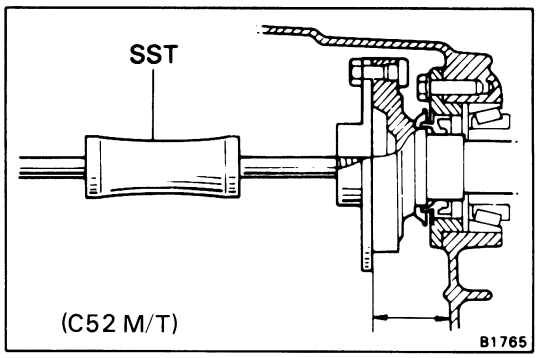

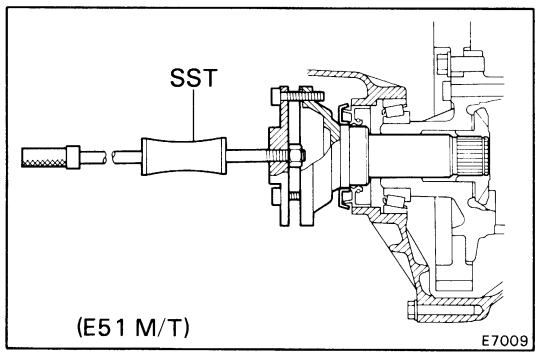

19. REMOVE SIDE GEAR SHAFT FROM TRANSAXLE

(a) In order to install the side gear shaft, push the side gear shaft to the differential. Measure and note the distance between the transaxle case and side gear shaft.

(b) Using SST, drive out the side gear shaft.

SST 09520-32012

C52 TRANSAXLE

Transmission

COMPONENTS

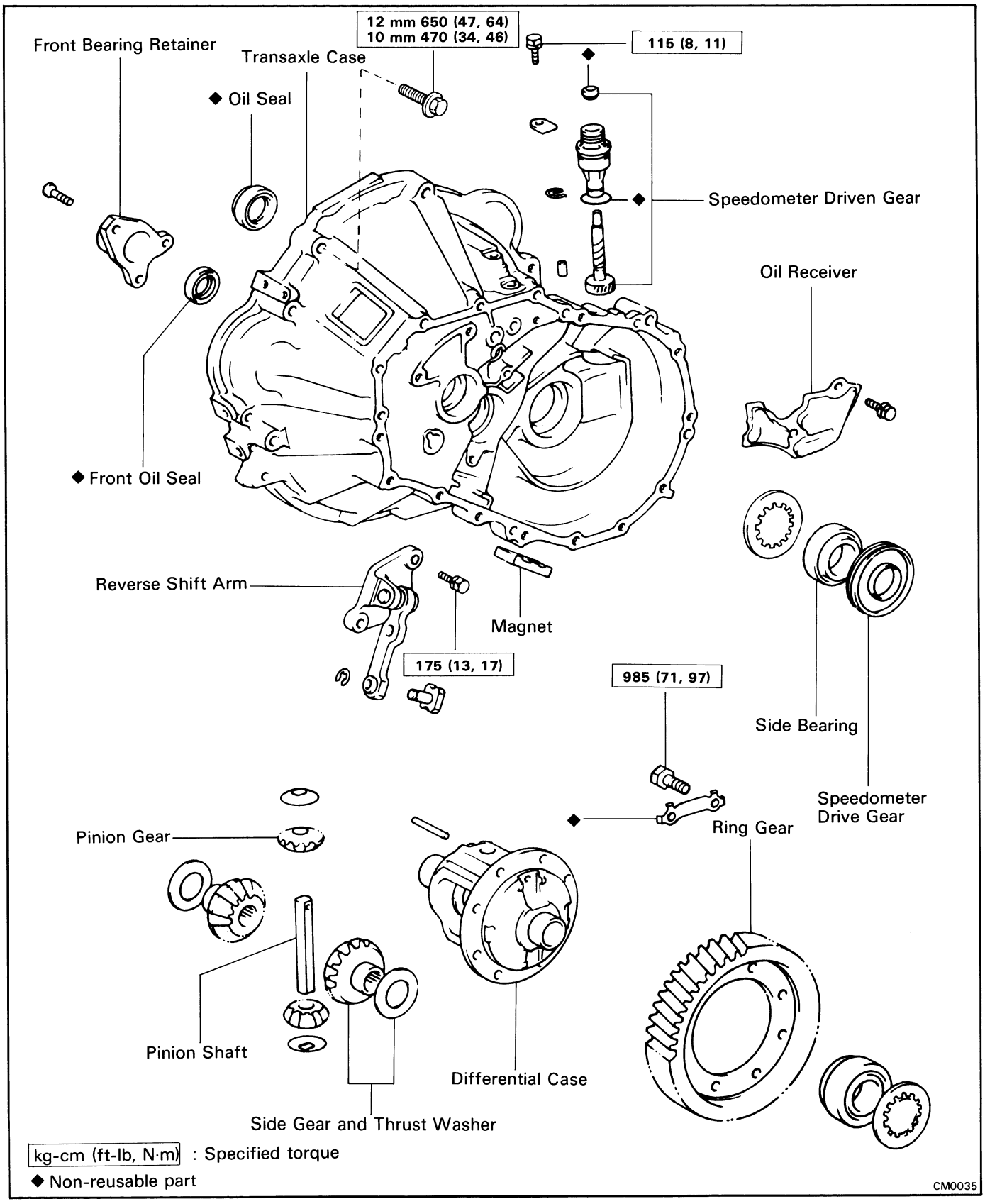

COMPONENTS (Cont'd)

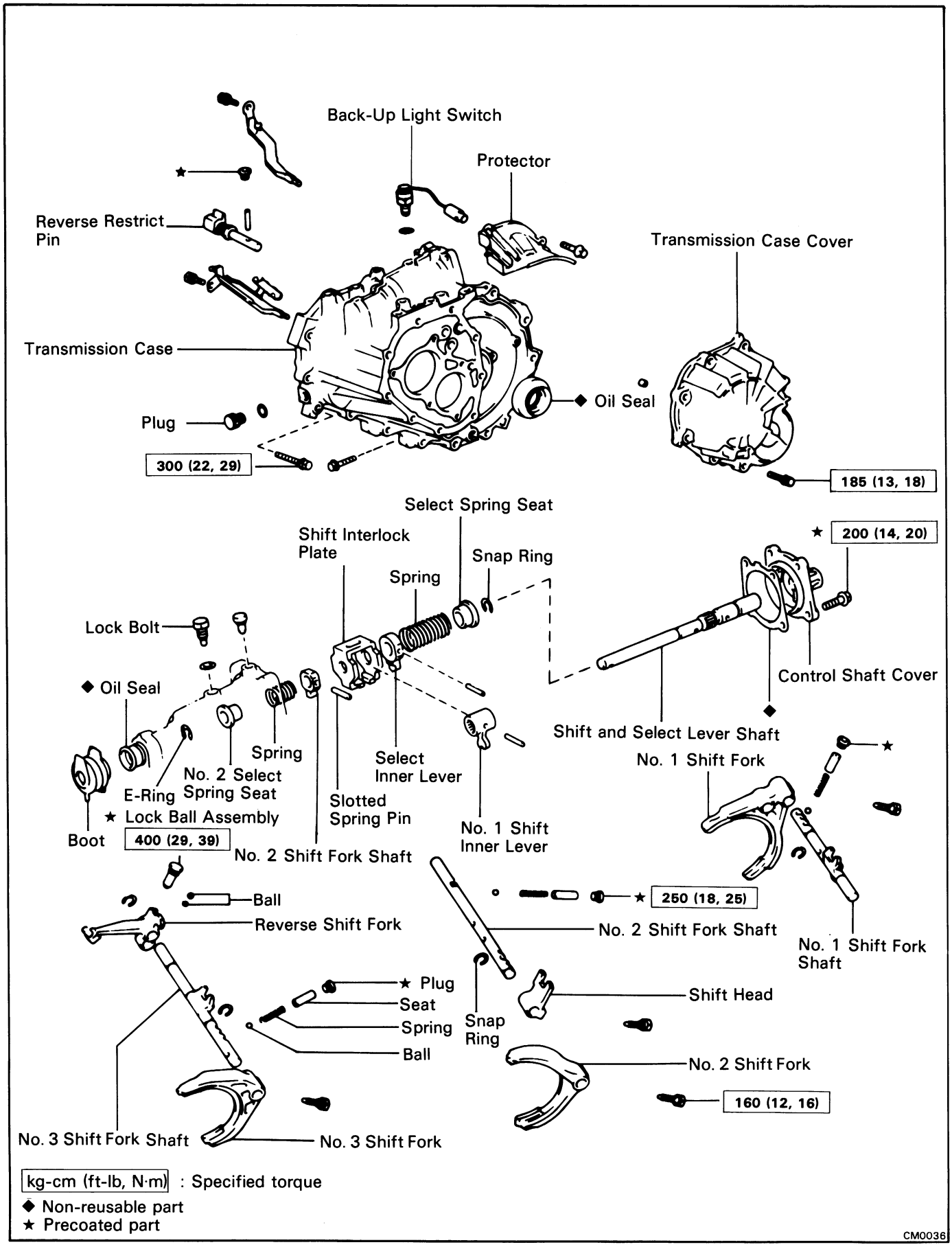

kg-cm (ft-lb, N·m) : Specified torque

◆ Non-reusable part

★ Precoated part

CM0036

COMPONENTS (Cont'd)

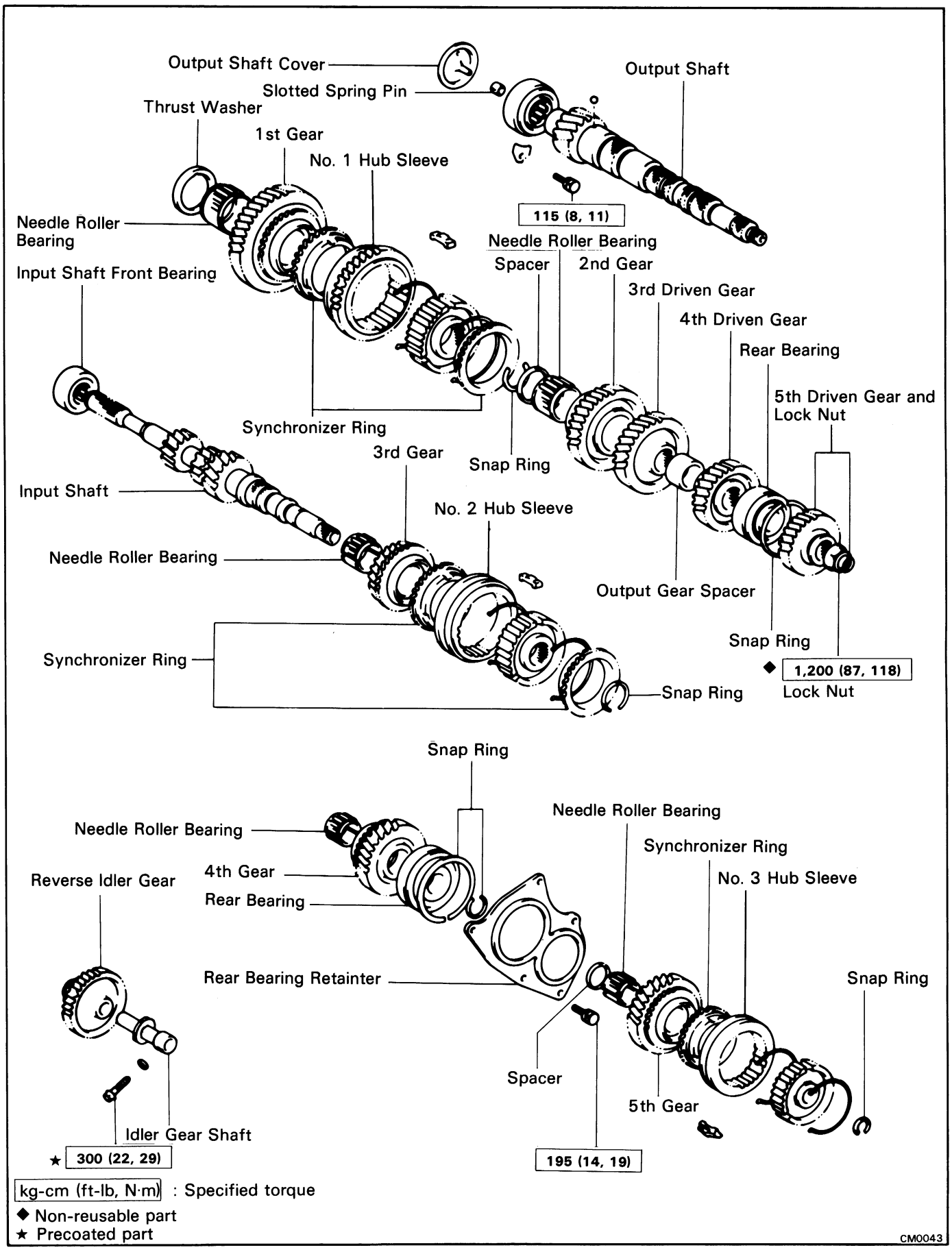

kg-cm (ft-lb, N·m) : Specified torque

◆ Non-reusable part

★ Precoated part

CM0043

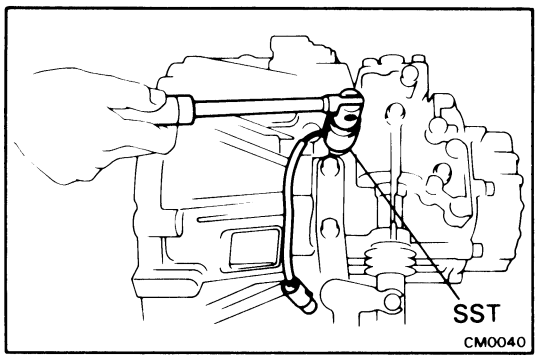

DISASSEMBLY OF TRANSMISSION

(See pages MT-7 to 9)

1. REMOVE RELEASE FORK, BEARING AND SPEEDOMETER DRIVEN GEAR

2. REMOVE BACK-UP LIGHT SWITCH

Using SST, remove the back-up light switch.

SST 09817-16011

3. REMOVE FRONT BEARING RETAINER

4. REMOVE TRANSMISSION CASE COVER

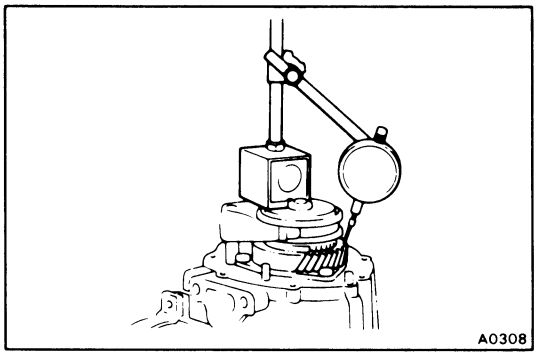

5. MEASURE FIFTH GEAR THRUST CLEARANCE

Using a dial indicator, measure the thrust clearance.

Standard clearance: 0.10 – 0.57 mm (0.0039 – 0.0224 in.)

Maximum clearance: 0.65 mm (0.0256 in.)

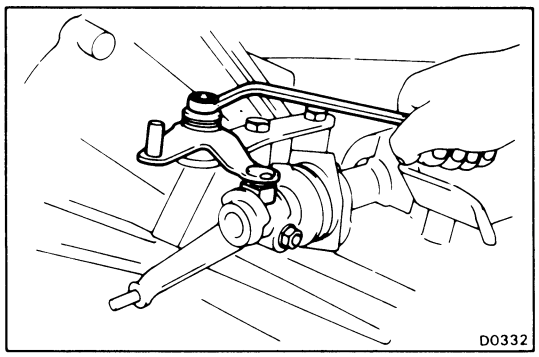

6. REMOVE SELECTING BELLCRANK

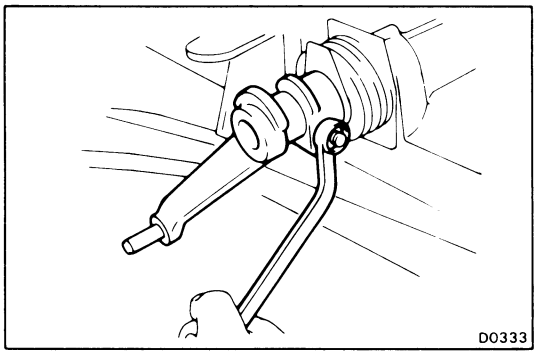

7. REMOVE SHIFT LEVER

(a) Remove the shift lever set nut.

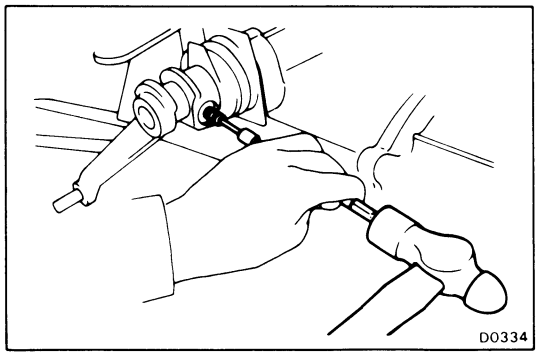

(b) Using a pin punch and hammer, tap out the lock pin.

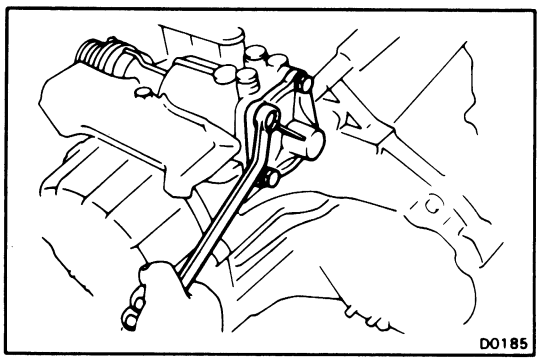

8. REMOVE CONTROL SHAFT RETAINER

Remove the bolts holding the control shaft retainer.

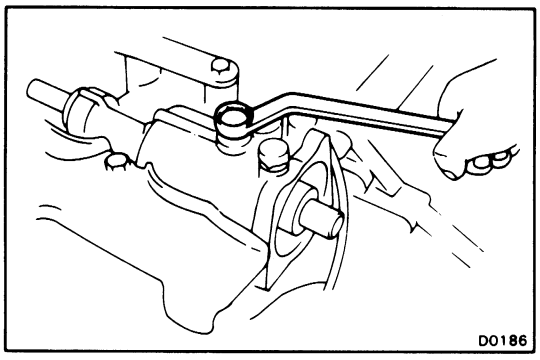

9. REMOVE LOCK BOLT

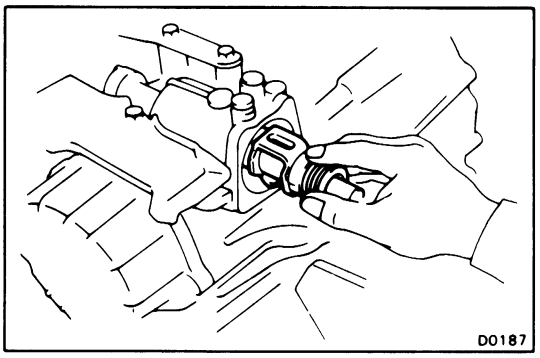

10. REMOVE SHIFT AND SELECT LEVER SHAFT ASSEMBLY

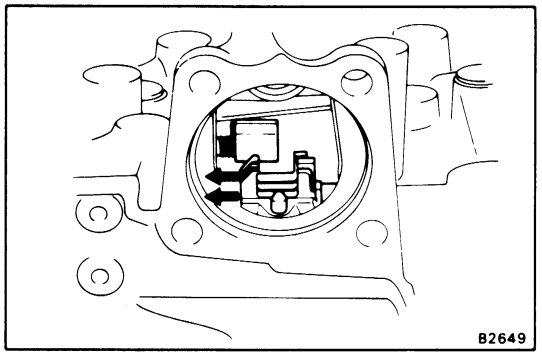

11. REMOVE LOCK NUT

(a) Engage the gear double meshing.

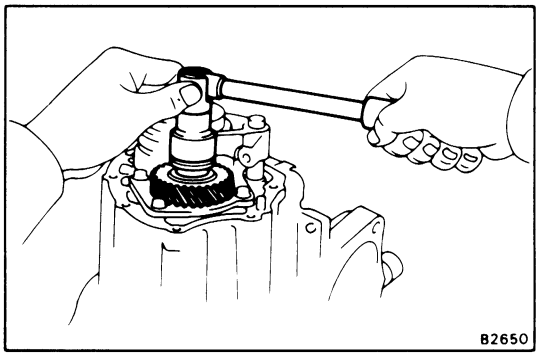

(b) Remove the lock nut.

(c) Disengage the gear double meshing.

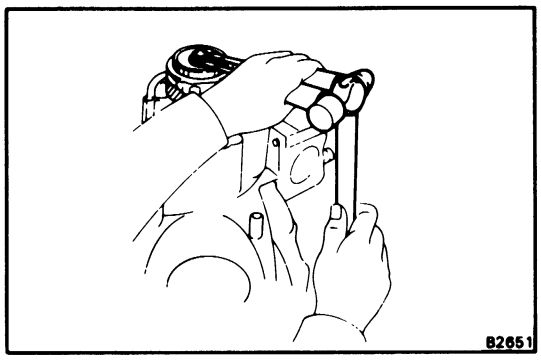

12. REMOVE NO. 3 HUB SLEEVE ASSEMBLY AND NO. 3 SHIFT FORK

(a) Using two screwdrivers and a hammer, tap out the snap ring.

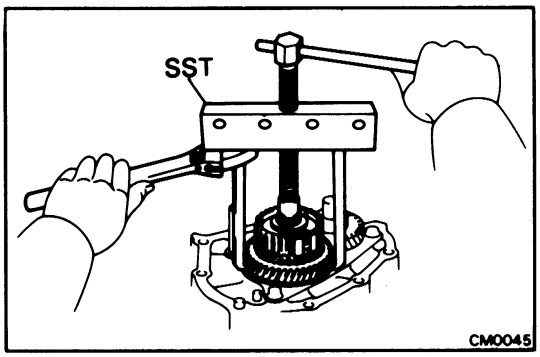

(b) Remove the bolt from No. 3 shift fork.

(c) Remove No. 3 hub sleeve and No. 3 shift fork.

(d) Using SST, remove the 5th gear, No. 3 hub and synchronizer ring.

SST 09213-36020

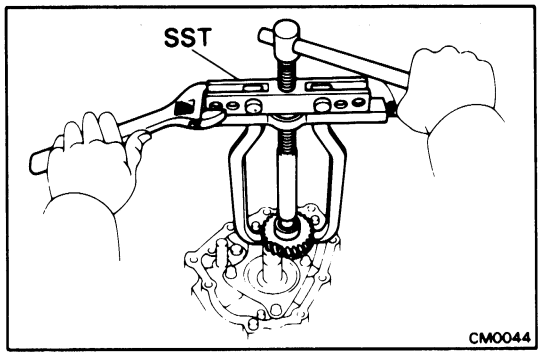

13. REMOVE NEEDLE ROLLER BEARING AND SPACER

14. REMOVE FIFTH DRIVEN GEAR

Using SST, remove the 5th driven gear.

SST 09950-20017

15. REMOVE REAR BEARING RETAINER

16. REMOVE BEARING SNAP RINGS

Using snap ring pliers, remove the two snap rings.

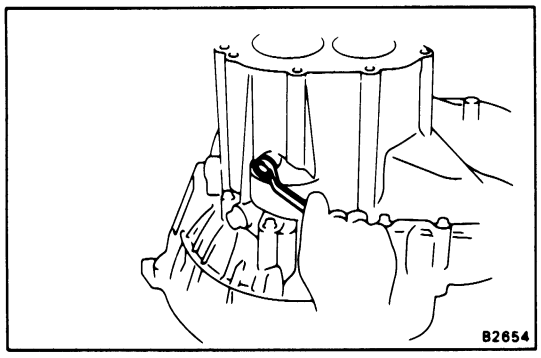

17. REMOVE REVERSE IDLER GEAR SHAFT LOCK BOLT

18. REMOVE SNAP RING FROM NO. 2 SHIFT FORK SHAFT

Using two screwdrivers and a hammer, tap out the snap ring.

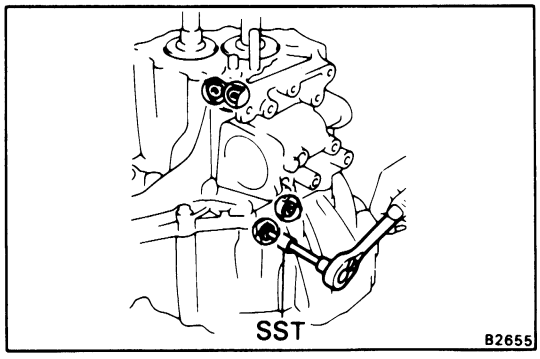

19. REMOVE PLUG, SEAT, SPRING, BALL AND LOCK BALL ASSEMBLY

(a) Using SST, remove the three plugs and the lock ball assembly.

SST 09313-30021

(b) Using a magnetic finger, remove the three seats, springs and balls.

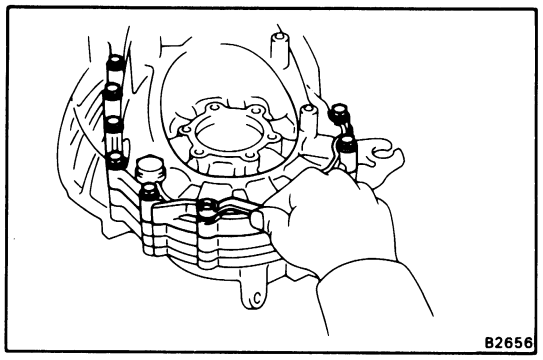

20. REMOVE TRANSMISSION CASE

Remove the sixteen bolts and tap off the case with a plastic hammer.

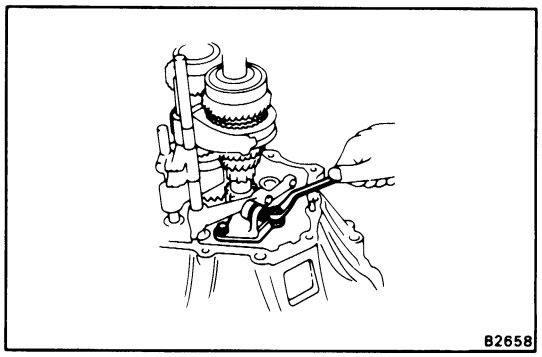

21. REMOVE REVERSE SHIFT ARM BRACKET

Remove the two bolts and pull off the bracket.

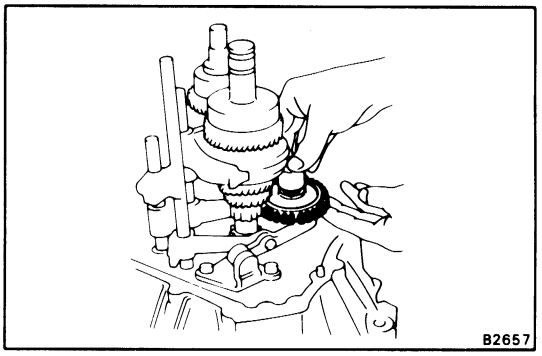

22. REMOVE REVERSE IDLER GEAR AND SHAFT

Pull out the shaft.

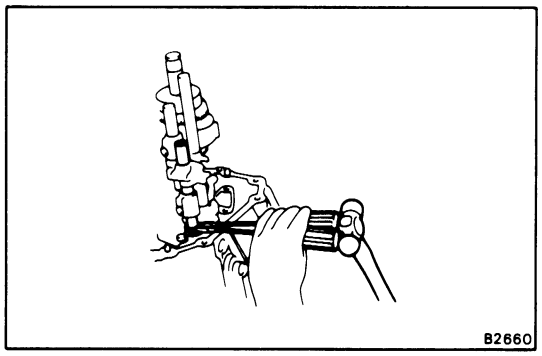

23. REMOVE SHIFT FORKS AND SHIFT FORK SHAFTS

(a) Using two screwdrivers and a hammer, tap out the three snap rings.

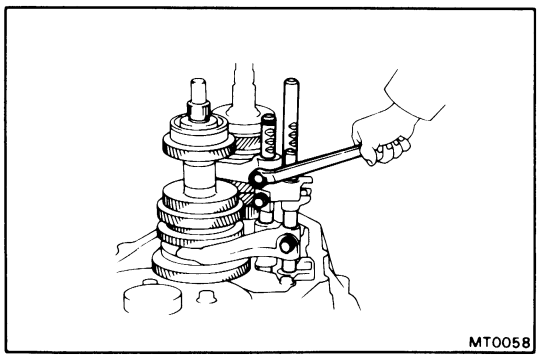

(b) Remove the three set bolts.

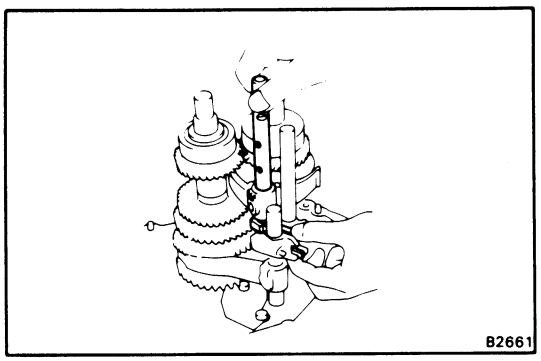

(c) Remove No. 2 fork shaft and shift head.

(d) Using a magnetic finger, remove the two balls.

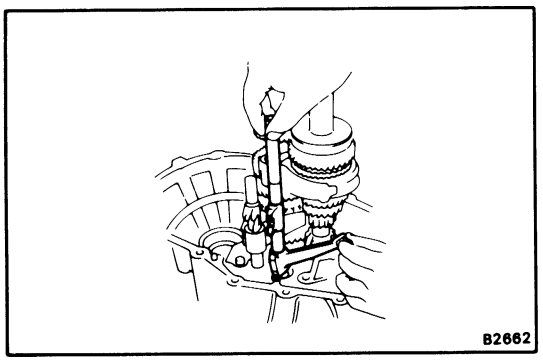

(e) Remove No. 3 fork shaft and reverse shift fork.

(f) Pull out No. 1 fork shaft.

(g) Remove No. 1 and No. 2 shift forks.

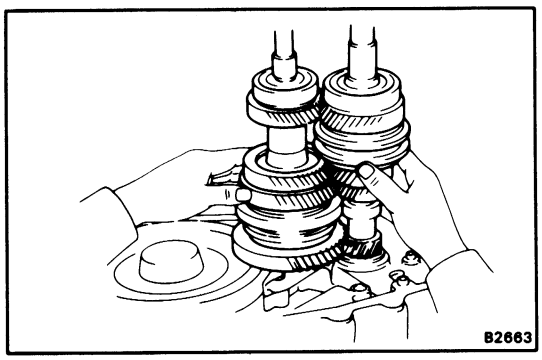

24. REMOVE INPUT AND OUTPUT SHAFT TOGETHER FROM TRANSAXLE CASE

25. REMOVE DIFFERENTIAL ASSEMBLY

26. REMOVE MAGNET AND OIL RECEIVER

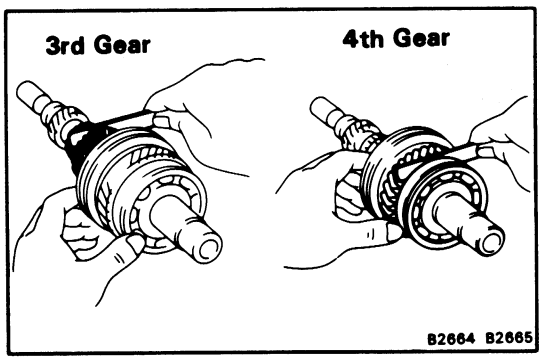

27. MEASURE THIRD AND FOURTH GEAR THRUST CLEARANCE

Using a feeler gauge, measure the thrust clearance.

Standard clearance:

3rd gear	**0.10 – 0.35 mm (0.0039 – 0.0138 in.)**
4th gear	**0.10 – 0.55 mm (0.0039 – 0.0217 in.)**

Maximum clearance:

3rd gear	**0.40 mm (0.0157 in.)**
4th gear	**0.60 mm (0.0236 in.)**

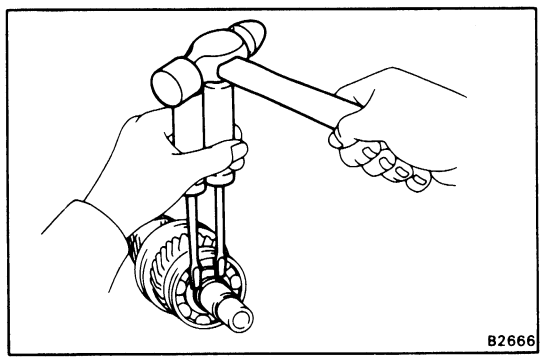

28. REMOVE SNAP RING FROM INPUT SHAFT

Using two screwdrivers and a hammer, tap out the snap ring.

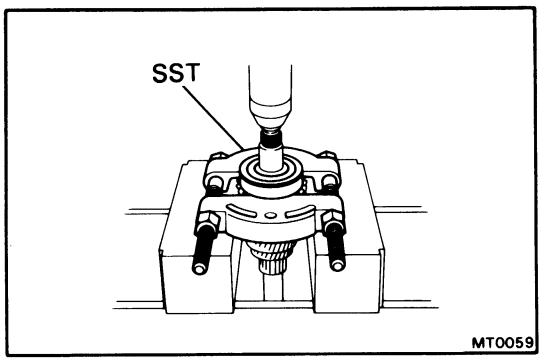

29. REMOVE RADIAL BALL BEARING, FOURTH GEAR, NEEDLE ROLLER BEARINGS AND SYNCHRONIZER RING FROM INPUT SHAFT

(a) Using SST and a press, remove the radial ball bearing.

SST 09950-00020

(b) Remove the 4th gear, needle roller bearings and synchronizer ring.

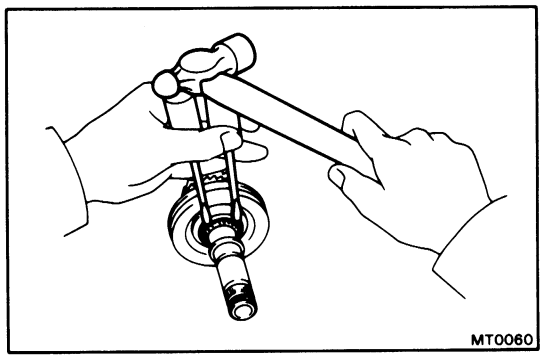

30. REMOVE SNAP RING

Using two screwdrivers and a hammer, tap out the snap ring.

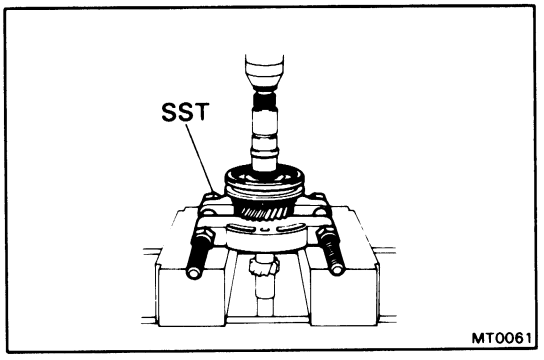

31. REMOVE NO. 2 HUB SLEEVE ASSEMBLY, THIRD GEAR, SYNCHRONIZER RING AND NEEDLE ROLLER BEARINGS

Using SST and a press, remove No. 2 hub sleeve, 3rd gear, synchronizer ring and needle roller bearings.

SST 09950-00020

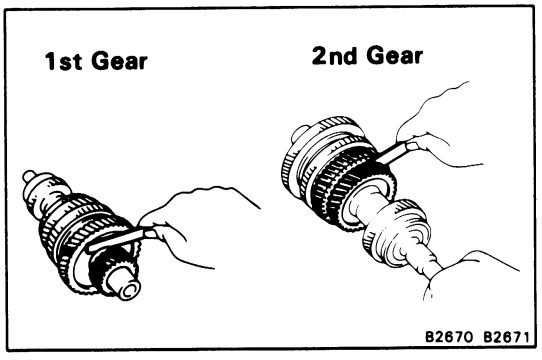

32. MEASURE FIRST AND SECOND GEAR THRUST CLEARANCE

Using a feeler gauge, measure the thrust clearance.

Standard clearance:

1st gear	**0.10 – 0.40 mm (0.0039 – 0.0157 in.)**
2nd gear	**0.10 – 0.45 mm (0.0039 – 0.0177 in.)**

Maximum clearance:

1st gear	**0.45 mm (0.0177 in.)**
2nd gear	**0.50 mm (0.0197 in.)**

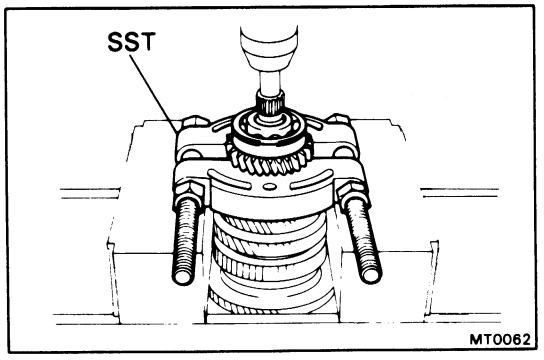

33. REMOVE RADIAL BALL BEARING, FOURTH DRIVEN GEAR AND SPACER FROM OUTPUT SHAFT

(a) Using SST and a press, remove the radial ball bearing and 4th driven gear.

SST 09950-00020

(b) Remove the spacer.

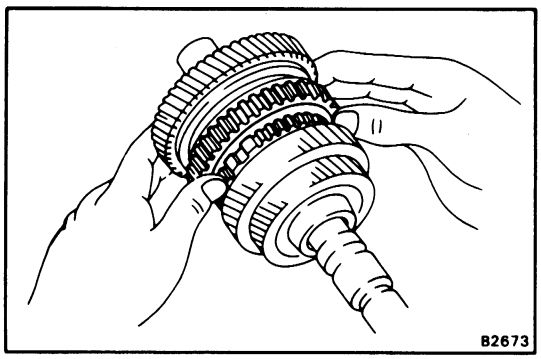

34. REMOVE THIRD DRIVEN GEAR, SECOND GEAR, NEEDLE ROLLER BEARING, SPACER AND SYNCHRONIZER RING

(a) Shift No. 1 hub sleeve into the 1st gear.

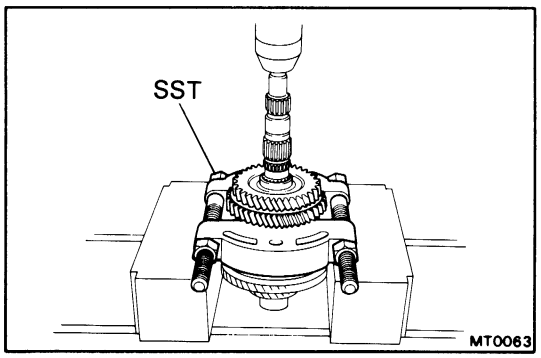

(b) Using SST and a press, remove the 3rd driven gear and 2nd gear.

SST 09950-00020

(c) Remove the needle roller bearing, spacer and synchronizer ring.

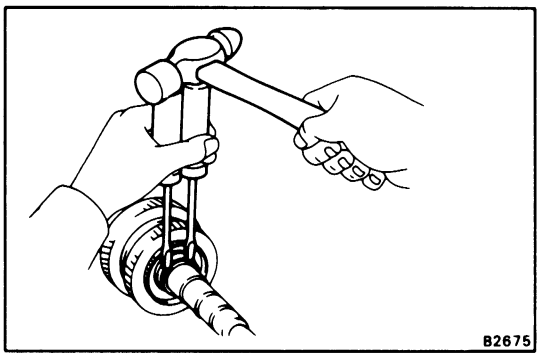

35. REMOVE SNAP RING

Using two screwdrivers and a hammer, tap out the snap ring.

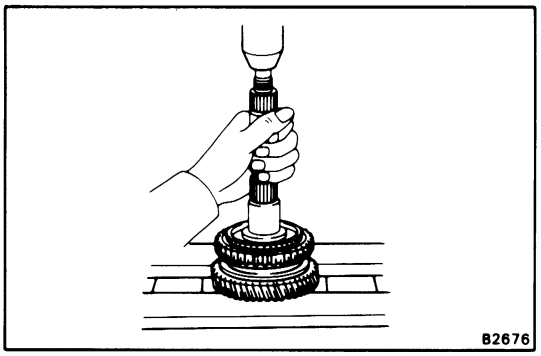

36. REMOVE NO. 1 HUB SLEEVE ASSEMBLY, FIRST GEAR, SYNCHRONIZER RING, NEEDLE ROLLER BEARING, THRUST WASHER AND LOCKING BALL

(a) Using a press, remove No. 1 hub sleeve, 1st gear and synchronizer ring.

(b) Remove the needle roller bearing, thrust washer and locking ball.

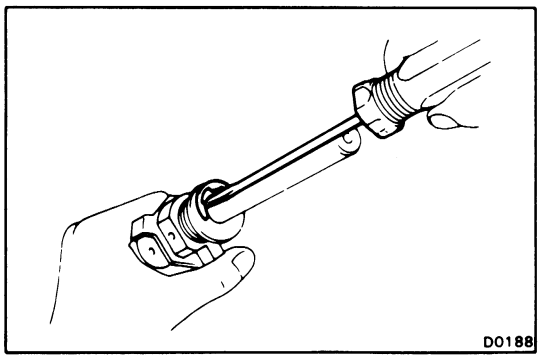

37. DISASSEMBLE SHIFT AND SELECT LEVER SHAFT ASSEMBLY

(a) Remove the E-ring and compression spring.

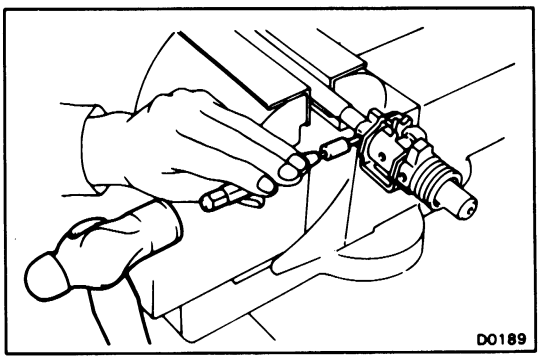

(b) Using a pin punch and hammer, drive out the three slotted spring pins from shift inner levers and select inner lever.

(c) Remove the No. 1 and No. 2 shift inner levers, shift interlock plate, select inner lever, compression spring and spring seat.

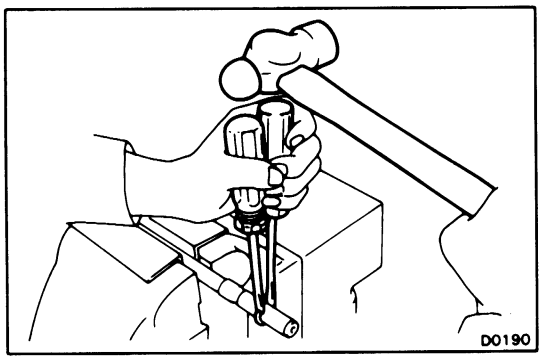

(d) Using two screwdrivers and a hammer, tap out the snap ring from the lever shaft.

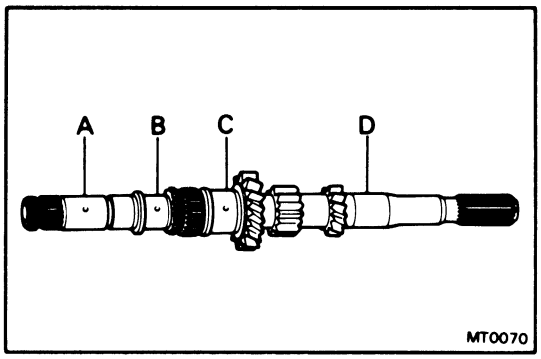

INSPECTION OF TRANSMISSION COMPONENTS

1. INSPECT INPUT SHAFT

(a) Check the input shaft for wear or damage.

(b) Using a micrometer, measure the outer diameter of the input shaft journal surface.

Minimum outer diameter:

Part A 24.870 mm (0.9791 in.)
B 26.470 mm (1.0421 in.)
C 30.970 mm (1.2193 in.)
D 24.970 mm (0.9831 in.)

(c) Using a dial indicator, check the shaft runout.

Maximum runout: 0.05 mm (0.0020 in.)

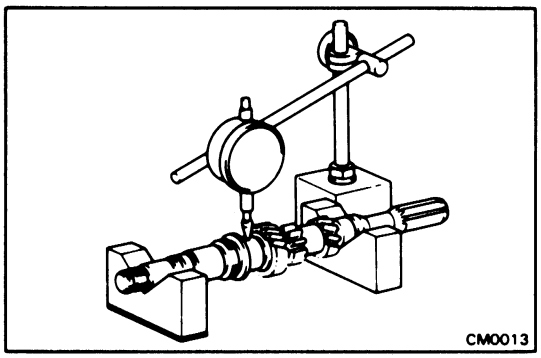

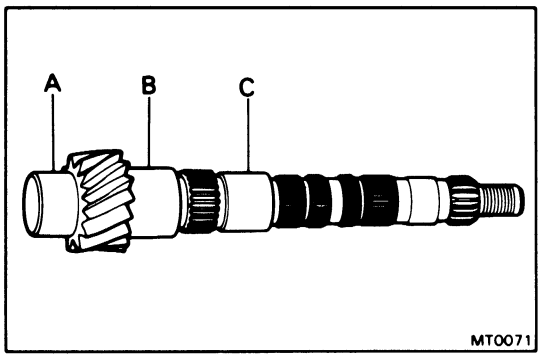

2. INSPECT OUTPUT SHAFT

(a) Check the output shaft for wear or damage.

(b) Using a micrometer, measure the outer diameter of the output shaft journal surface.

Minimum outer diameter:

Part A 32.970 mm (1.2980 in.)
B 37.970 mm (1.4949 in.)
C 31.970 mm (1.2587 in.)

(c) Using a dial indicator, check the shaft runout.

Maximum runout: 0.05 mm (0.0020 in.)

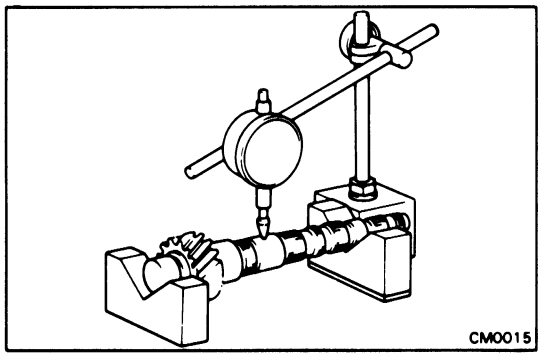

3. CHECK OIL CLEARANCE OF EACH GEAR

Using a dial indicator, measure the oil clearance between the gear and input or output shaft with the needle roller bearing installed.

Standard clearance: 0.015 – 0.058 mm (0.0006 – 0.0023 in.)
Maximum clearance: 0.070 mm (0.0028 in.)

If the clearance exceeds the limit, replace the gear, needle roller bearing or shaft.

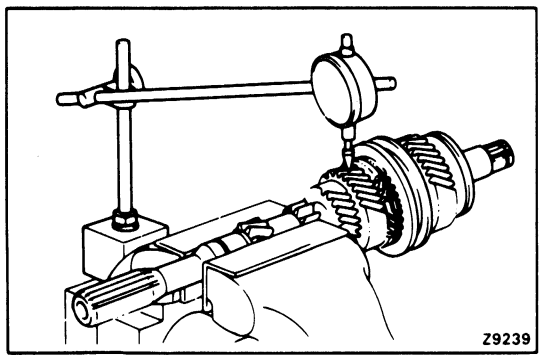

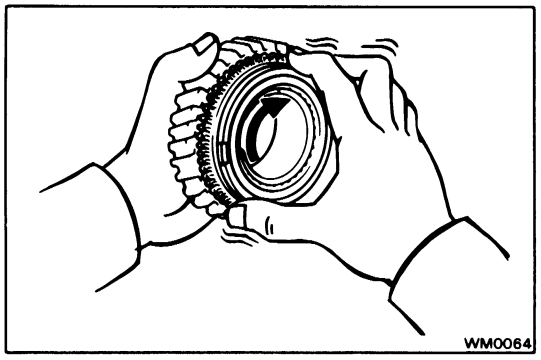

4. INSPECT SYNCHRONIZER RINGS

(a) Check for wear or damage.

(b) Turn the ring and push it in to check the braking action.

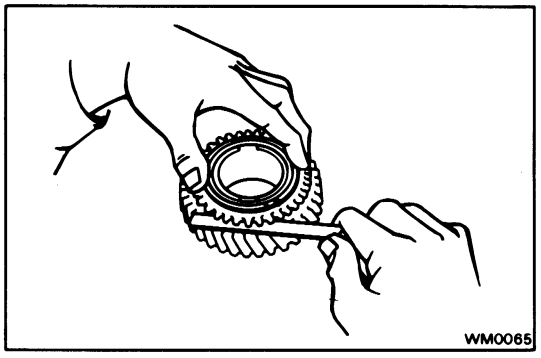

(c) Measure the clearance between the synchronizer ring back and the gear spline end.

Minimum clearance: 0.6 mm (0.024 in.)

If the clearance is less than the limit, replace the synchronizer ring.

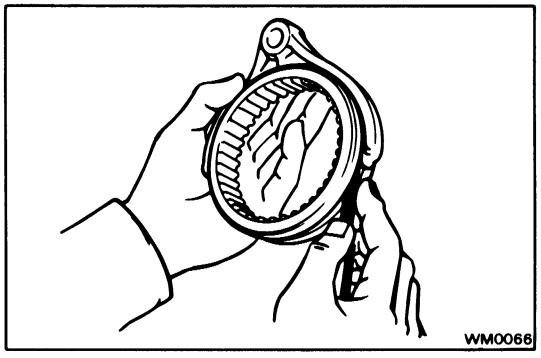

5. MEASURE CLEARANCE OF SHIFT FORKS AND HUB SLEEVES

Using a feeler gauge, measure the clearance between the hub sleeve and shift fork.

Maximum clearance: 1.0 mm (0.039 in.)

If the clearance exceeds the limit, replace the shift fork or hub sleeve.

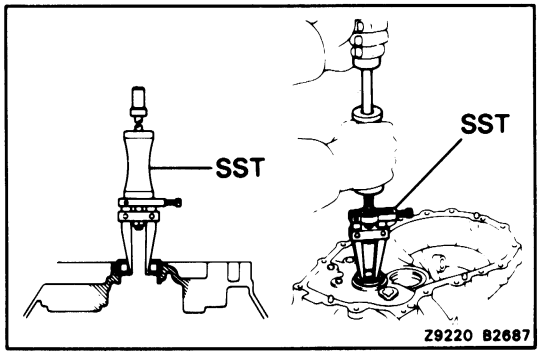

6. IF NECESSARY, REPLACE INPUT SHAFT FRONT BEARING

(a) Using SST, pull out the bearing.

SST 09308-00010

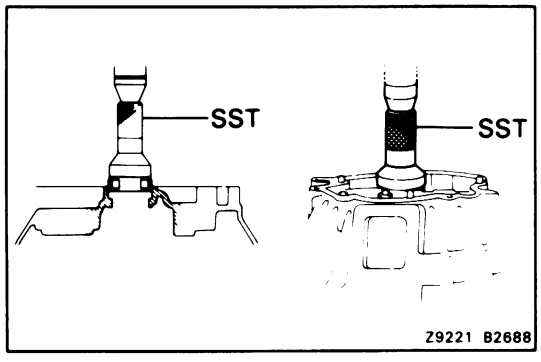

(b) Using SST, press in a new bearing.

SST 09310-35010

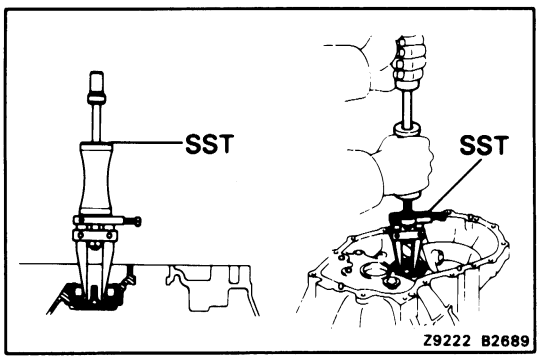

7. IF NECESSARY, REPLACE OUTPUT SHAFT FRONT BEARING

(a) Remove the bolt and bearing lock plate.

(b) Using SST, pull out the bearing.

SST 09308-00010

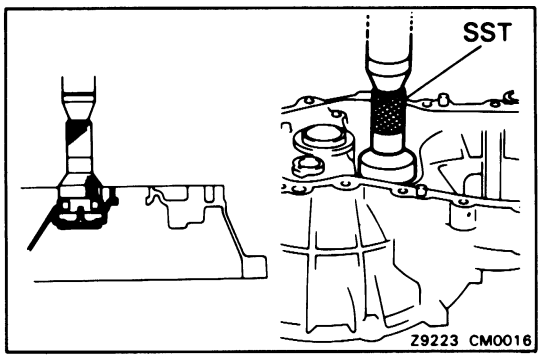

(c) Using SST, press in a new bearing.

SST 09310-35010

(d) Install the bearing lock plate and torque the bolt.

Torque: 115 kg-cm (8 ft-lb, 11 N·m)

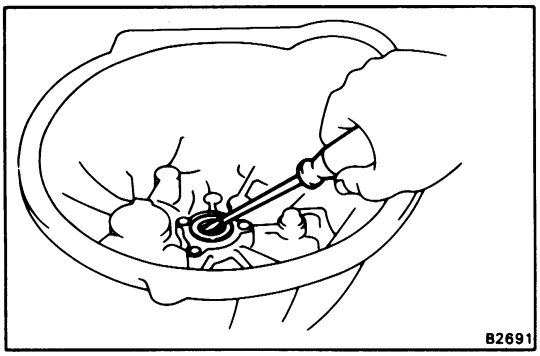

8. IF NECESSARY, REPLACE INPUT SHAFT FRONT OIL SEAL

(a) Using a screwdriver, pry out the oil seal.

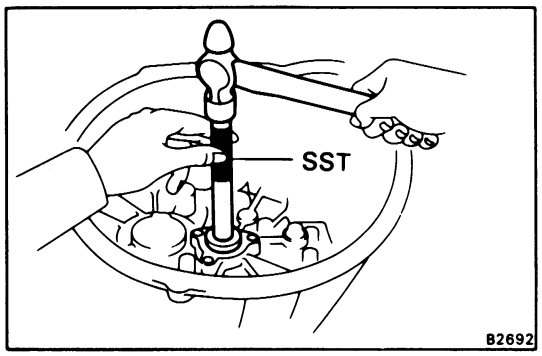

(b) Using SST, press in a new oil seal.

SST 09608-12010 (09608-00020, 09608-00080)

(c) Coat the lip of oil seal with MP grease.

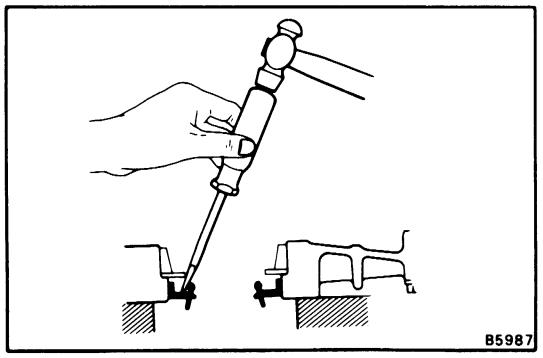

9. IF NECESSARY, REPLACE LH SIDE OIL SEAL

(a) Drive out the oil seal with a screwdriver.

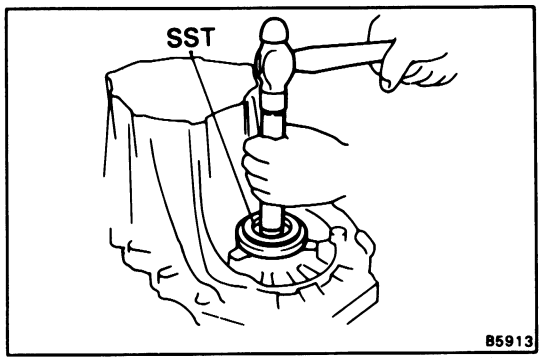

(b) Using SST, drive in a new oil seal until its surface is flush with the case surface.

SST 09350-32014 (09351-32111, 09351-32130)

(c) Coat the lip of oil seal with MP grease.

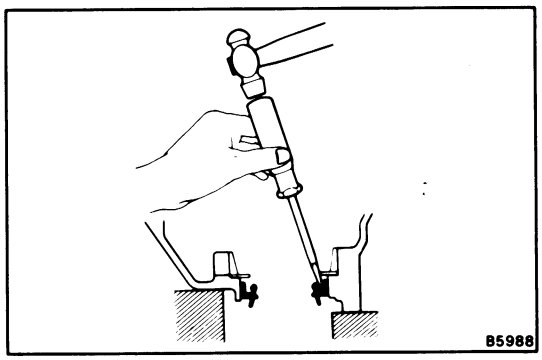

10. IF NECESSARY, REPLACE RH SIDE OIL SEAL

(a) Drive out the oil seal with a screwdriver.

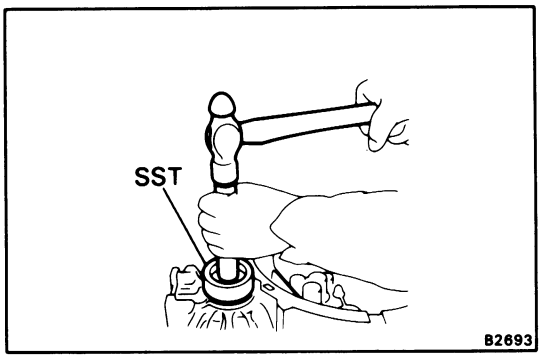

(b) Using SST, drive in a new oil seal until its surface is flush with the case surface.

SST 09350-32014 (09351-32130, 09351-32150)

(c) Coat the lip of oil seal with MP grease.

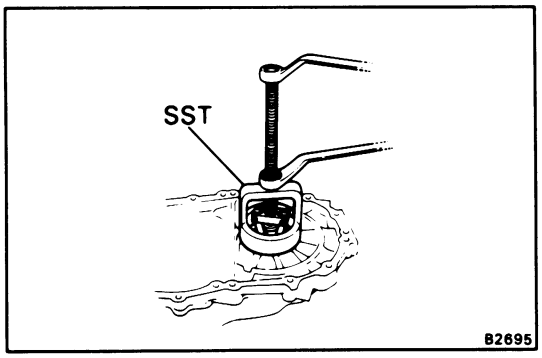

11. IF NECESSARY, REPLACE LH OUTER RACE OF SIDE BEARING

(a) Using SST, pull out the outer race and shim.

SST 09612-65014 (09612-01060)

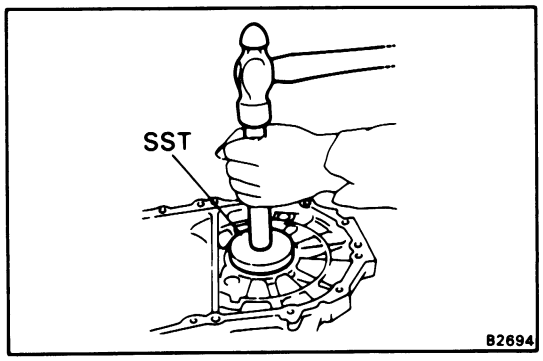

(b) Place the shim into the case.

(c) Using SST, drive in a new outer race.

SST 09608-20012 (09608-03020, 09608-03090)

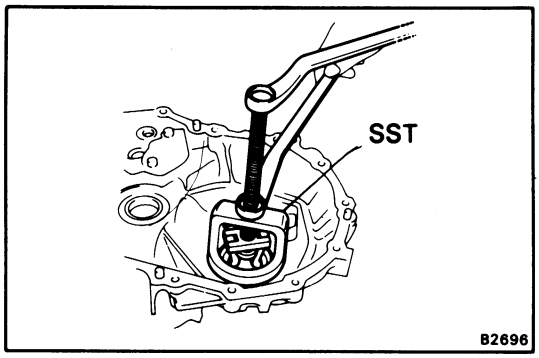

12. IF NECESSARY, REPLACE RH OUTER RACE OF SIDE BEARING

(a) Using SST, pull out the outer race and shim.

SST 09612-65014 (09612-01060)

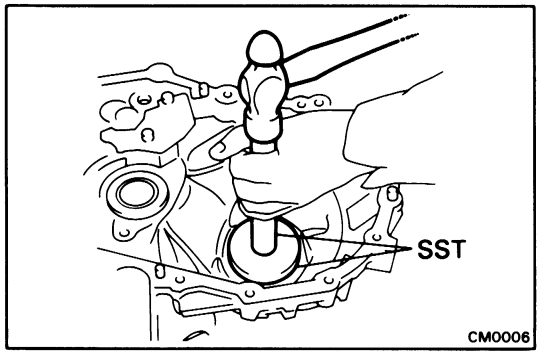

(b) Place the shim into the case.

(c) Using SST, drive in a new outer race.

SST 09608-20012 (09608-03020, 09608-03090)

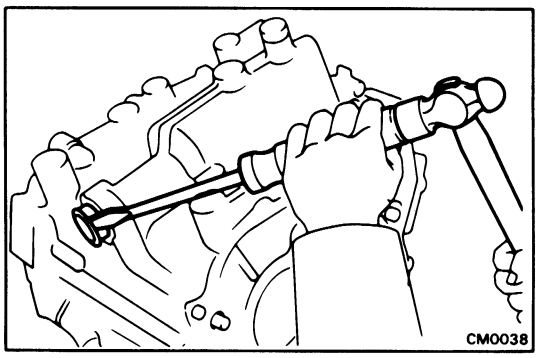

13. IF NECESSARY, REPLACE CONTROL SHAFT OIL SEAL

(a) Drive out the oil seal with a screwdriver.

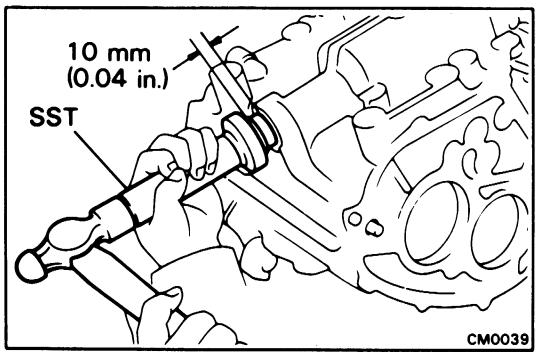

(b) Using SST, drive in a new oil seal.

SST 09517-36010

(c) Coat the lip of oil seal with MP grease.

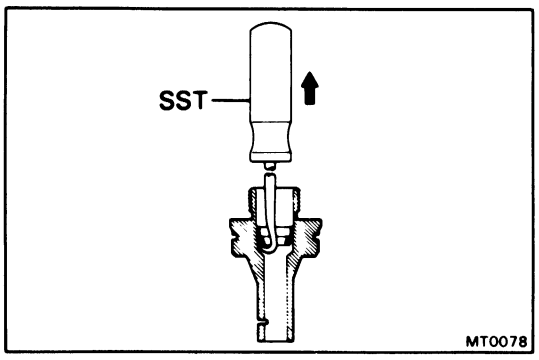

14. IF NECESSARY, REPLACE SPEEDOMETER DRIVEN GEAR OIL SEAL

(a) Using SST, pull out the oil seal.

SST 09921-00010

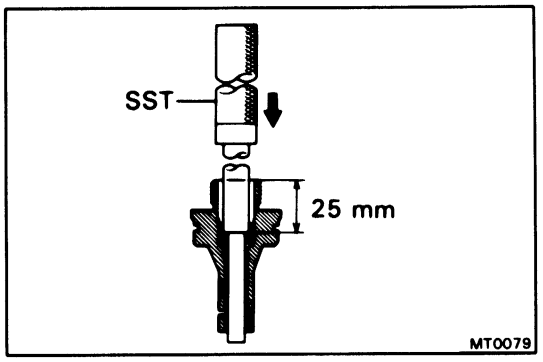

(b) Using SST, drive in a new oil seal.

SST 09201-60011

Drive in depth: 25 mm (0.98 in.)

(c) Coat the lip of oil seal with MP grease.

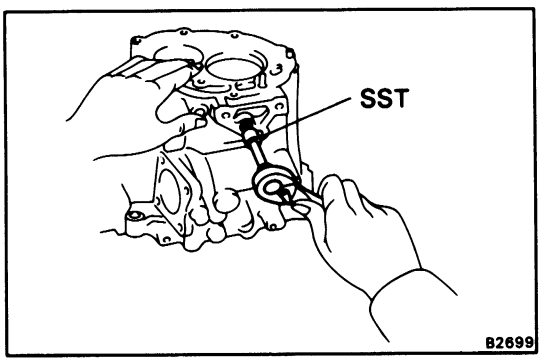

15. IF NECESSARY, REPLACE REVERSE RESTRICT PIN

(a) Using SST, remove the screw plug.

SST 09313-30021

(b) Using a pin punch and hammer, drive out the slotted spring pin.

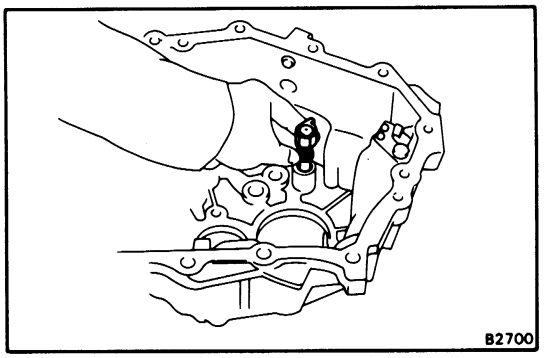

(c) Replace the reverse restrict pin.

(d) Drive in the slotted spring pin.

(e) Apply liquid sealer to the plug threads.

Sealant: Part No. 08833-00080, THREE BOND 1344, LOCTITE 242 or equivalent

(f) Using SST, install the screw plug.

SST 09313-30021

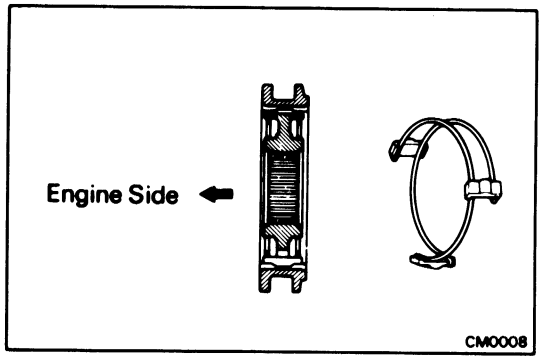

ASSEMBLY OF TRANSMISSION

(See pages MT-7 to 9)

1. INSERT NO. 2 CLUTCH HUB INTO HUB SLEEVE

(a) Install the clutch hub and shifting keys to the hub sleeve.

(b) Install the shifting key springs under the shifting keys.

CAUTION: Install the key springs positioned so that their end gaps are not in line.

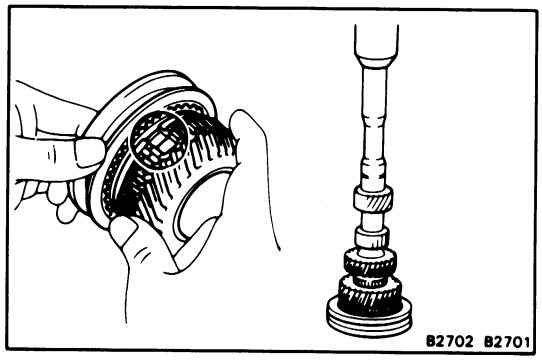

2. INSTALL THIRD GEAR, NEEDLE ROLLER BEARINGS, SYNCHRONIZER RING AND NO. 2 HUB SLEEVE ASSEMBLY TO INPUT SHAFT

(a) Apply MP grease to the needle roller bearings.

(b) Place the synchronizer ring on the gear and align the ring slots with the shifting keys.

(c) Using a press, install the 3rd gear and No. 2 hub sleeve.

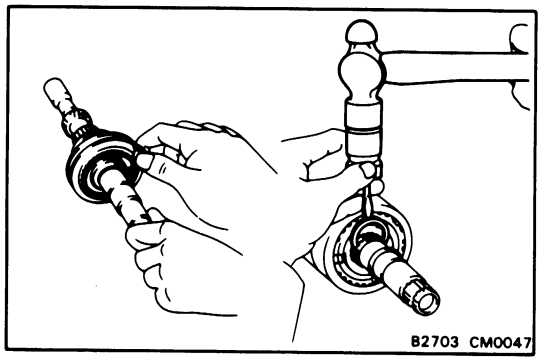

3. INSTALL SNAP RING

Select a snap ring that will allow minimum axial play and install it on the shaft.

Mark	Thickness mm (in.)	Mark	Thickness mm (in.)
0	2.30 (0.0906)	3	2.48 (0.0976)
1	2.36 (0.0929)	4	2.54 (0.1000)
2	2.42 (0.0953)	5	2.60 (0.1024)

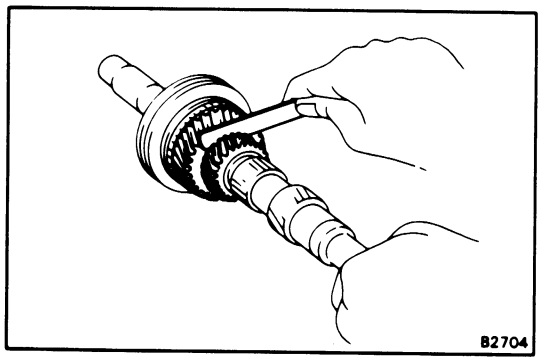

4. MEASURE THIRD GEAR THRUST CLEARANCE

Using a feeler gauge, measure the 3rd gear thrust clearance.

Standard clearance: 0.10 – 0.35 mm (0.0039 – 0.0138 in.)

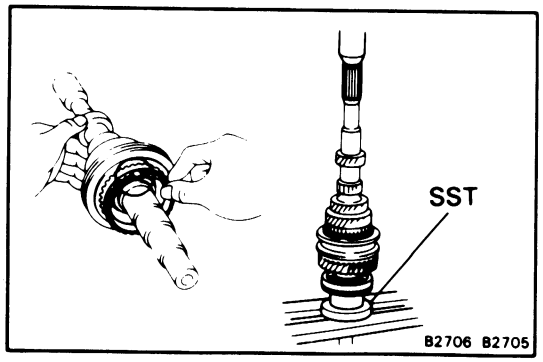

5. INSTALL SYNCHRONIZER RING, NEEDLE ROLLER BEARING, FOURTH GEAR AND RADIAL BALL BEARING

(a) Apply MP grease to the needle roller bearing.

(b) Place the synchronizer ring on the gear and align the ring slots with the shifting keys.

(c) Using SST, press in the radial ball bearing.

SST 09608-12010 (09608-00070)

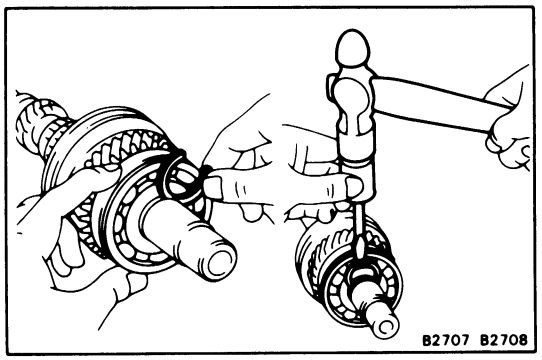

6. INSTALL SNAP RING

Select a snap ring that will allow minimum axial play and install it on the shaft.

Mark	Thickness mm (in.)	Mark	Thickness mm (in.)
A	2.29 (0.0902)	D	2.47 (0.0972)
B	2.35 (0.0925)	E	2.53 (0.0996)
C	2.41 (0.0949)	F	2.59 (0.1020)

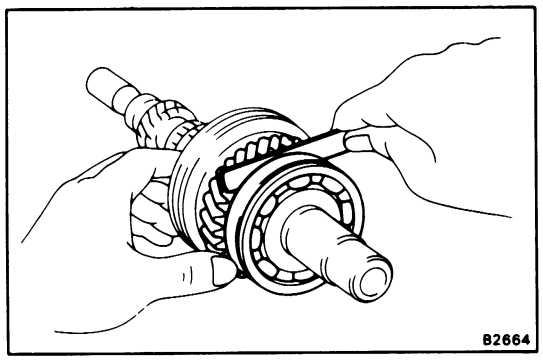

7. MEASURE FOURTH GEAR THRUST CLEARANCE

Using a feeler gauge, measure the 4th gear thrust clearance.

Standard clearance: 0.10 – 0.55 mm (0.0039 – 0.0217 in.)

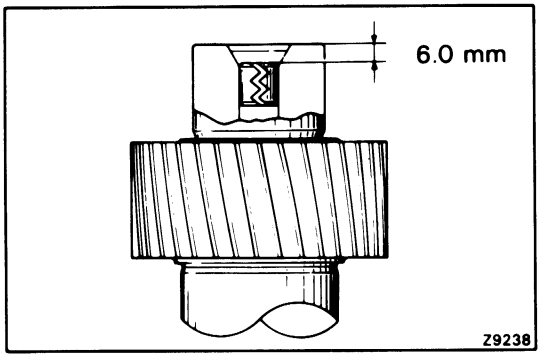

8. IF OUTPUT SHAFT WAS REPLACED, DRIVE IN SLOTTED SPRING

If the output shaft was replaced, drive the slotted spring pin in the output shaft to a depth of 6.0 mm (0.236 in.).

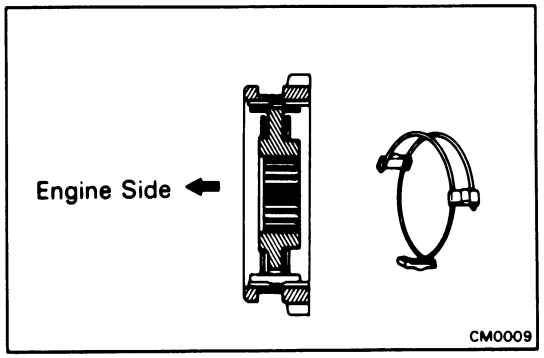

9. INSERT NO. 1 CLUTCH HUB INTO HUB SLEEVE

(a) Install the clutch hub and shifting keys to the hub sleeve.

(b) Install the shifting key springs under the shifting keys.

CAUTION: Install the key springs positioned so that their end gaps are not in line.

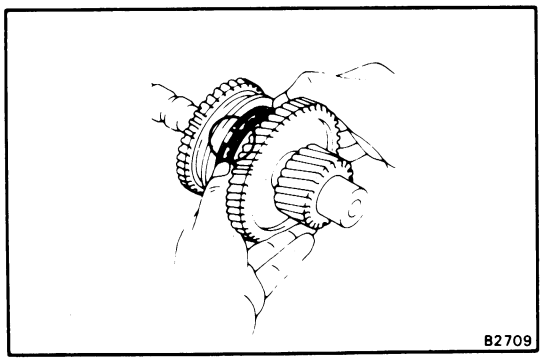

10. INSTALL THRUST WASHER, FIRST GEAR, NEEDLE ROLLER BEARING, SYNCHRONIZER RING AND NO. 1 HUB SLEEVE TO OUTPUT SHAFT

(a) Install the locking ball in the shaft.

(b) Fit the thrust washer groove securely over the locking ball when installing the thrust washer on the shaft.

(c) Apply MP grease to the needle roller bearing.

(d) Place the synchronizer ring on the gear and align the ring slots with the shifting keys.

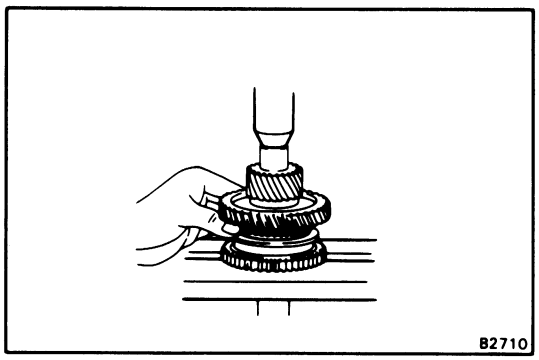

(e) Using a press, install the 1st gear and No. 1 hub sleeve.

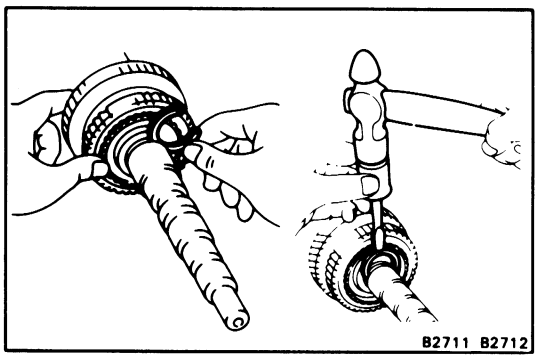

11. INSTALL SNAP RING

Select a snap ring that will allow minimum axial play, and install it on the shaft.

Mark	Thickness mm (in.)	Mark	Thickness mm (in.)
A	2.50 (0.0984)	D	2.68 (0.1055)
B	2.56 (0.1008)	E	2.74 (0.1079)
C	2.62 (0.1031)	F	2.80 (0.1102)

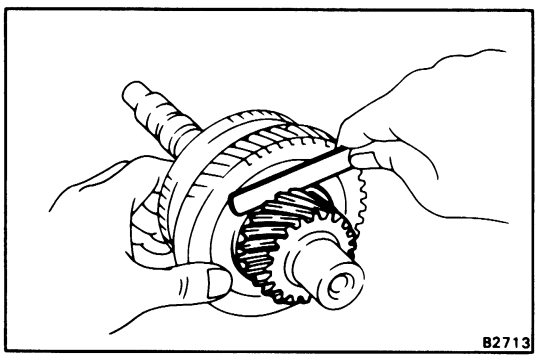

12. MEASURE FIRST GEAR THRUST CLEARANCE

Using a feeler gauge, measure the 1st gear thrust clearance.

Standard clearance: 0.10 – 0.40 mm (0.0039 – 0.0157 in.)

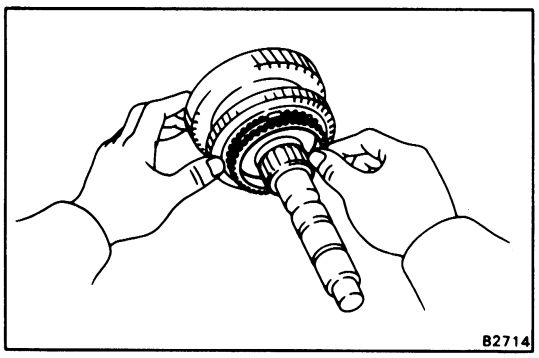

13. INSTALL SPACER, SYNCHRONIZER RING, SECOND GEAR, NEEDLE ROLLER BEARING AND THIRD DRIVEN GEAR

(a) Install the spacer.

(b) Place the synchronizer ring on the gear and align the ring slots with the shifting keys.

(c) Apply MP grease to the needle roller bearing.

(d) Install the 2nd gear.

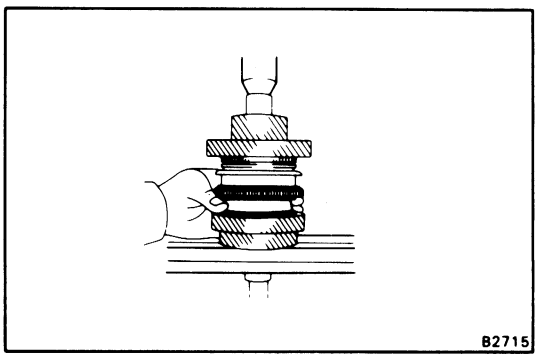

(e) Using a press, install the 3rd driven gear.

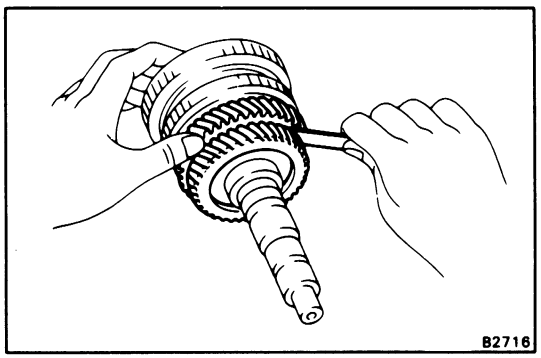

14. MEASURE SECOND GEAR THRUST CLEARANCE

Using a feeler gauge, measure the 2nd gear thrust clearance.

Standard clearance: 0.10 – 0.45 mm (0.0039 – 0.0177 in.)

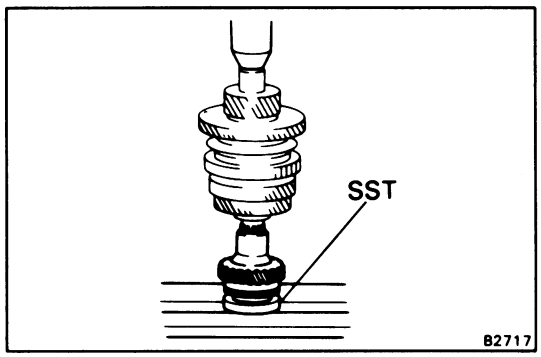

15. INSTALL OUTPUT GEAR SPACER, FOURTH DRIVEN GEAR AND RADIAL BALL BEARING

(a) Install the spacer.

(b) Using SST, press in the 4th driven gear and bearing.

SST 09608-12010 (09608-00070)

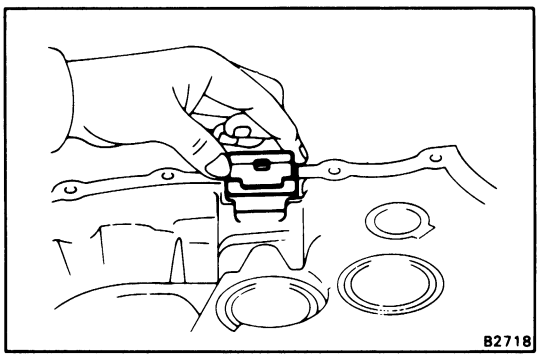

16. INSTALL MAGNET

17. INSTALL OIL RECEIVER

Install the oil receiver with two bolts.

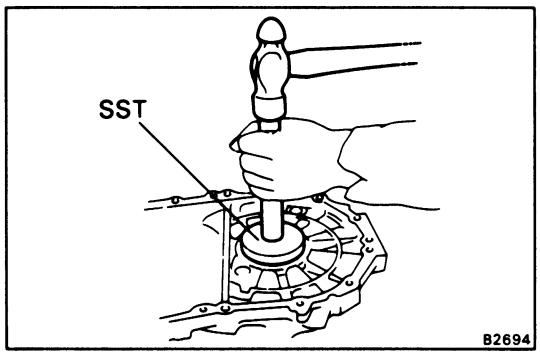

18. ADJUST DIFFERENTIAL SIDE BEARING PRELOAD

(a) Install the thinnest shim into the transmission case.

(b) Using SST, drive in the outer race of the side bearing.

SST 09608-20012 (09608-03020, 09608-03090)

(c) Install the differential to the transaxle case.

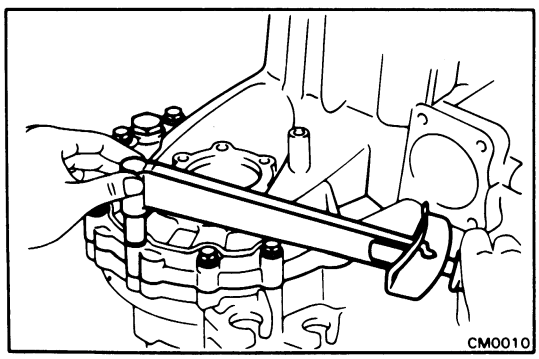

(d) Install the transmission case.

(e) Install and torque the case bolts.

Torque: 300 kg-cm (22 ft-lb, 29 N·m)

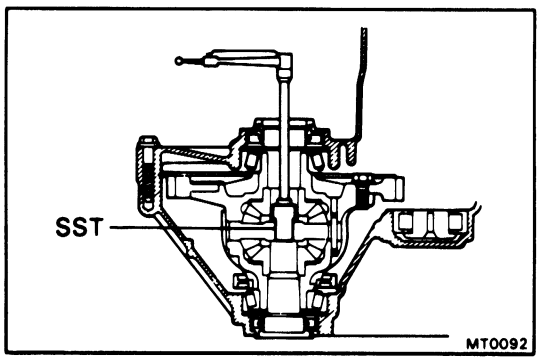

(f) Using SST and torque meter, measure the preload.

SST 09564-32011

Preload (starting):

New bearing	**8 – 16 kg-cm (6.9 – 13.9 in.-lb, 0.8 – 1.6 N·m)**
Reused bearing	**5 – 10 kg-cm (4.3 – 8.7 in.-lb, 0.5 – 1.0 N·m)**

If the preload is not within specification, remove the transmission case side outer race of the side bearing with SST.

Reselect an adjusting shim.

NOTE: The preload will change about 3 – 4 kg-cm (2.6 – 3.5 in.-lb, 0.3 – 0.4 N·m) with each shim thickness.

Mark	Thickness mm (in.)	Mark	Thickness mm (in.)
A	2.10 (0.0827)	L	2.60 (0.1024)
B	2.15 (0.0846)	M	2.65 (0.1043)
C	2.20 (0.0866)	N	2.70 (0.1063)
D	2.25 (0.0886)	P	2.75 (0.1083)
E	2.30 (0.0906)	Q	2.80 (0.1102)
F	2.35 (0.0925)	R	2.85 (0.1122)
G	2.40 (0.0945)	S	2.90 (0.1142)
H	2.45 (0.0965)	T	2.95 (0.1161)
J	2.50 (0.0984)	U	3.00 (0.1181)
K	2.55 (0.1004)		

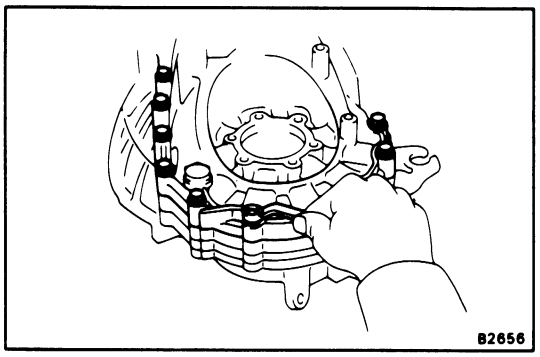

19. REMOVE TRANSMISSION CASE

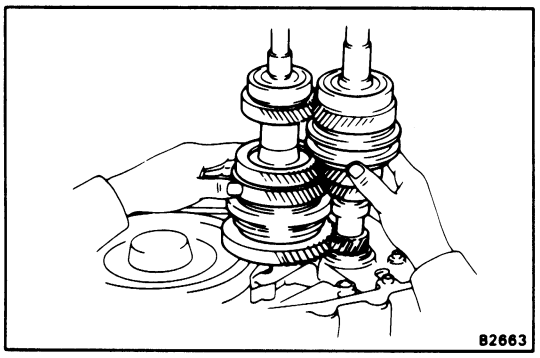

20. INSTALL INPUT AND OUTPUT SHAFT

Install the input and output shafts together.

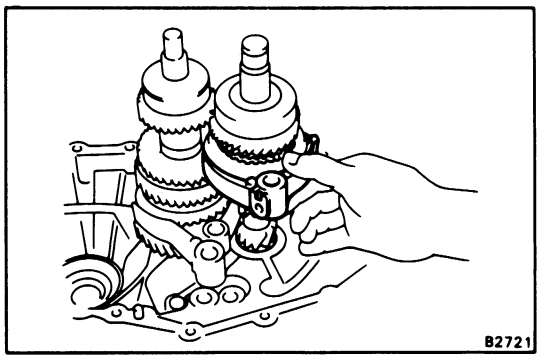

21. INSTALL SHIFT FORKS AND SHIFT FORK SHAFTS

(a) Place No. 1 and No. 2 shift forks into the groove of No. 1 and No. 2 hub sleeves.

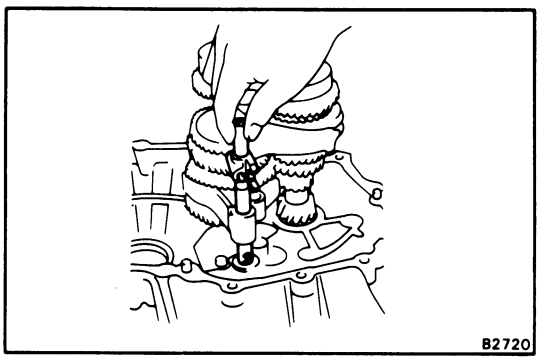

(b) Insert No. 1 fork shaft into No. 1 shift fork hole.

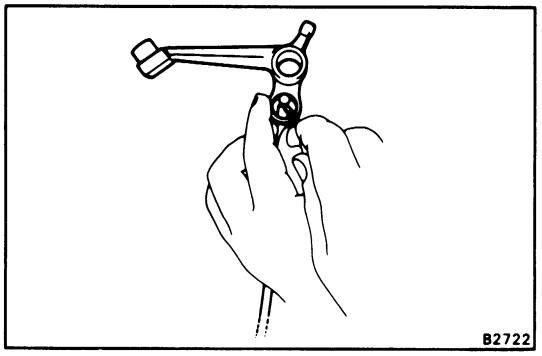

(c) Insert the two interlock balls into the reverse shift fork hole.

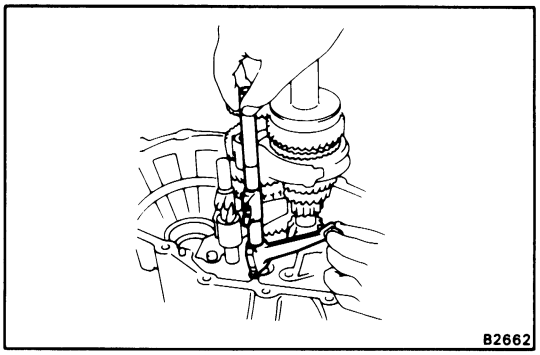

(d) Install No. 3 fork shaft and the reverse shift fork.

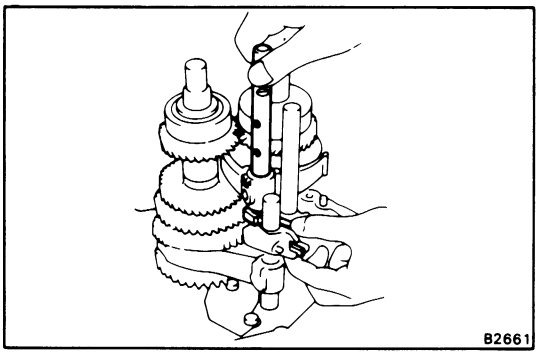

(e) Install No. 2 fork shaft and the shift head.

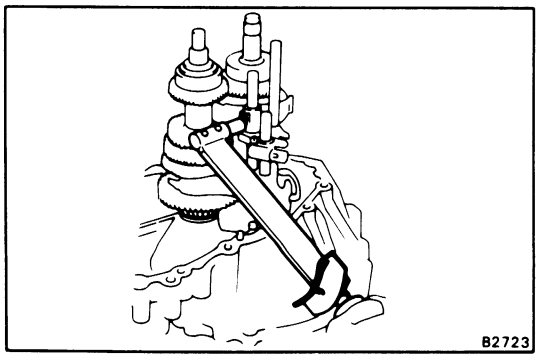

(f) Install the three bolts.

Torque: 160 kg-cm (12 ft-lb, 16 N·m)

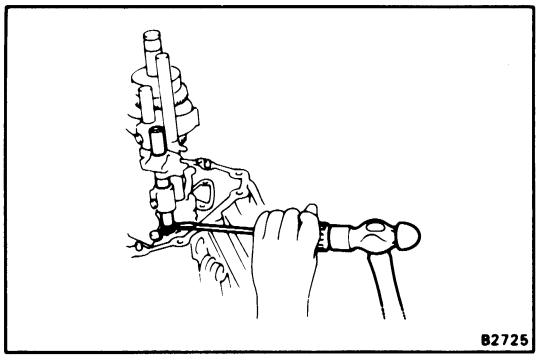

(g) Install the three snap rings.

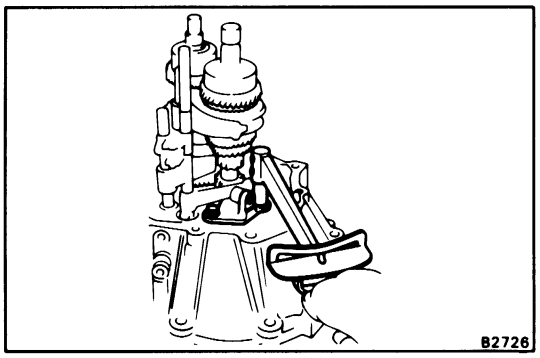

22. INSTALL REVERSE SHIFT ARM

(a) Put the reverse shift fork pivot into the reverse shift arm and install the reverse shift arm to the transaxle case.

(b) Install and torque the bolts.

Torque: 175 kg-cm (13 ft-lb, 17 N·m)

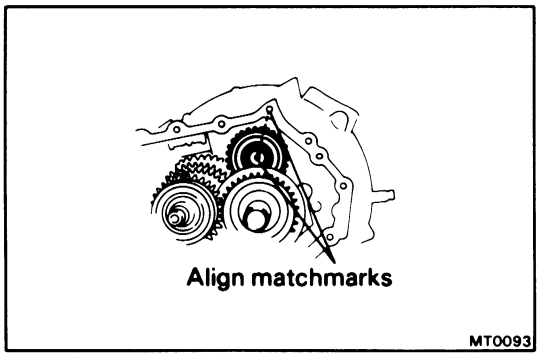

23. INSTALL REVERSE IDLER GEAR AND SHAFT

Install the reverse idler gear and shaft as shown.

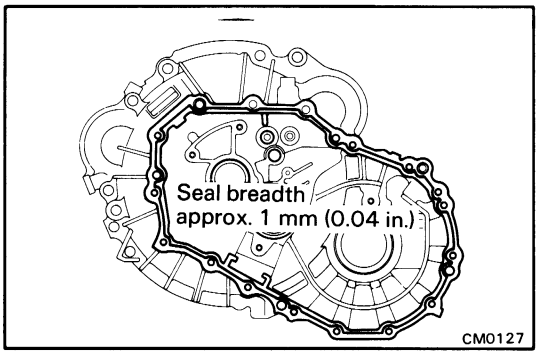

24. INSTALL TRANSMISSION CASE

(a) Remove any packing material and be careful not to drop oil on the contacting surfaces of the transmission case or transaxle case.

(b) Apply seal packing to the transmission case as shown in the figure.

Seal packing: Part No. 08826-00090, THREE BOND 1281 or equivalent

NOTE: Install the transmission case as soon as the seal packing is applied.

(c) Install and torque the sixteen bolts.

Torque: 300 kg-cm (22 ft-lb, 29 N·m)

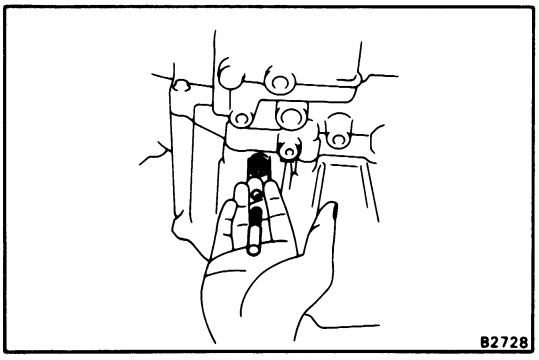

25. INSTALL BALL, SPRING, SEAT, PLUG AND LOCK BALL ASSEMBLY

(a) Insert the balls, springs and seats into the holes.

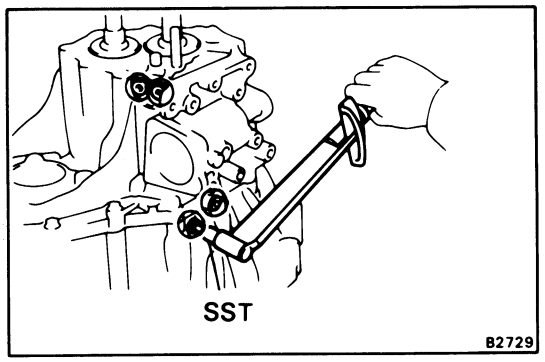

(b) Apply liquid sealer to the plugs and the lock ball assembly.

Sealant: Part No. 08833-00080, THREE BOND 1344, LOCTITE 242 or equivalent

(c) Using SST, tighten the three plugs and the lock ball assembly.

SST 09313-30021

Torque:	**Straight screw plug (For shift fork shaft)**	**250 kg-cm (18 ft-lb, 25 N·m)**
	Lock ball assembly	**400 kg-cm (29 ft-lb, 39 N·m)**

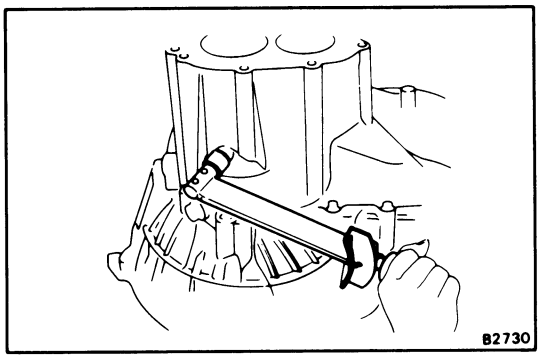

26. INSTALL AND TORQUE REVERSE IDLER GEAR SHAFT LOCK BOLT

(a) Apply sealant to the bolt threads.

Sealant: Part No. 08833-00070, Adhesive 1324, THREE BOND 1324, or equivalent

(b) Install and torque the bolt.

Torque: 300 kg-cm (22 ft-lb, 29 N·m)

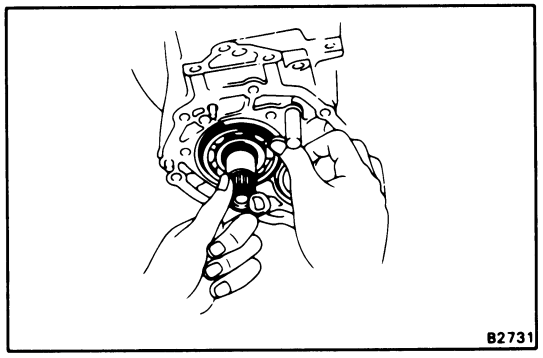

27. INSTALL BEARING SNAP RINGS

28. INSTALL SNAP RING TO NO. 2 FORK SHAFT

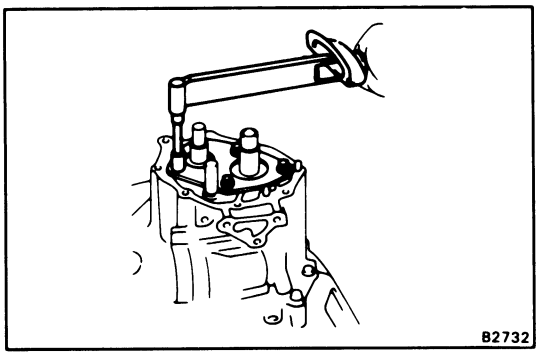

29. INSTALL REAR BEARING RETAINER

Install and torque the five bolts.

Torque: 195 kg-cm (14 ft-lb, 19 N·m)

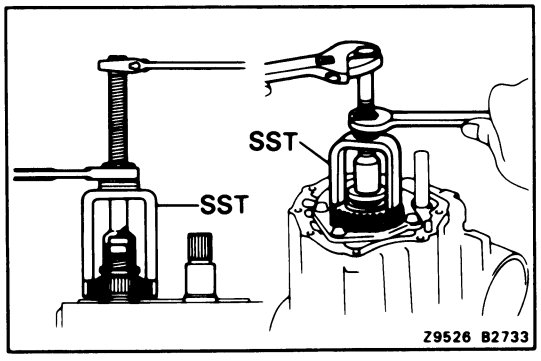

30. INSTALL FIFTH DRIVEN GEAR

Using SST, install the 5th driven gear.

SST 09309-12020

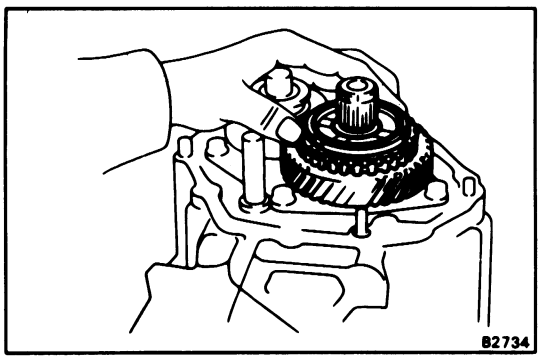

31. INSTALL SPACER, NEEDLE ROLLER BEARING, FIFTH GEAR AND SYNCHRONIZER RING

(a) Install the spacer.

(b) Apply MP grease to the needle roller bearings.

(c) Install the 5th gear with the needle roller bearing and synchronizer ring.

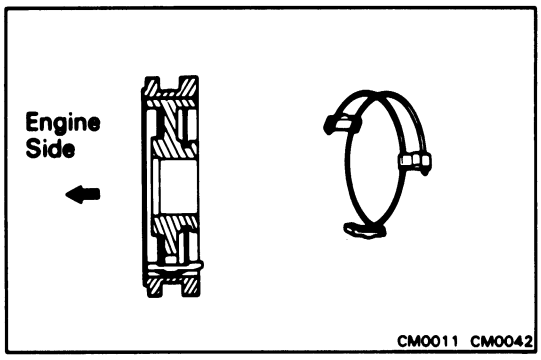

32. INSERT NO. 3 CLUTCH HUB INTO HUB SLEEVE

(a) Install the clutch hub and shifting keys to the hub sleeve.

(b) Install the shifting key springs under the shifting keys.

CAUTION: Install the key springs positioned so that their end gaps are not in line.

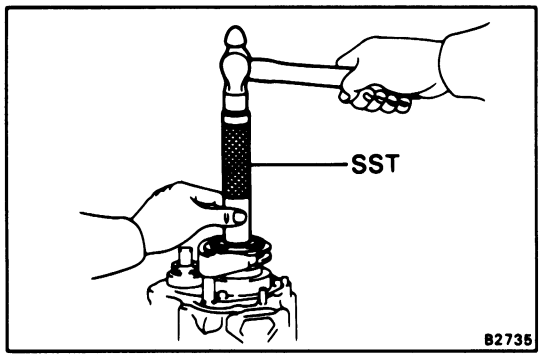

33. INSTALL NO. 3 HUB SLEEVE ASSEMBLY WITH NO. 3 SHIFT FORK

(a) Support the tip of the input shaft with a spacer or such to raise the transaxle assembly.

(b) Using SST, drive in No. 3 hub sleeve with No. 3 shift fork.

SST 09612-22011

CAUTION: Align the synchronizer ring slots with the shifting keys.

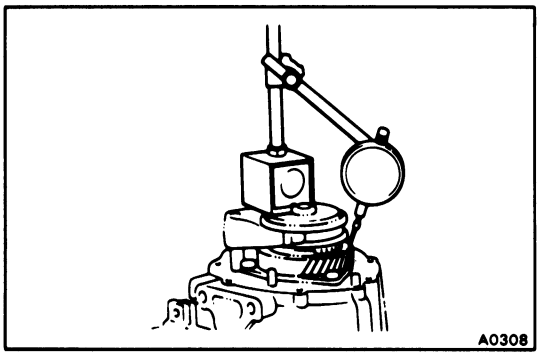

34. MEASURE FIFTH GEAR THRUST CLEARANCE

Standard clearance: 0.10 – 0.57 mm (0.0039 – 0.0224 in.)

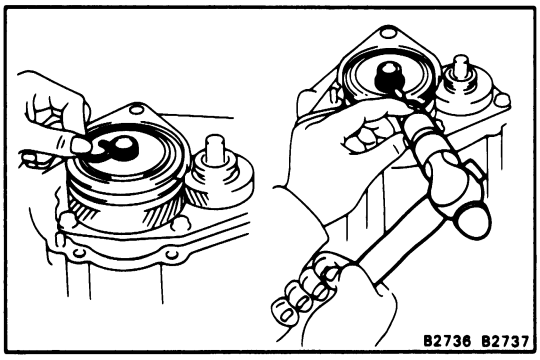

35. INSTALL SNAP RING

Select a snap ring that will allow minimum axial play and install it on the shaft.

Mark	Thickness mm (in.)	Mark	Thickness mm (in.)
A	2.25 (0.0886)	E	2.49 (0.0980)
B	2.31 (0.0909)	F	2.55 (0.1004)
C	2.37 (0.0933)	G	2.61 (0.1028)
D	2.43 (0.0957)		

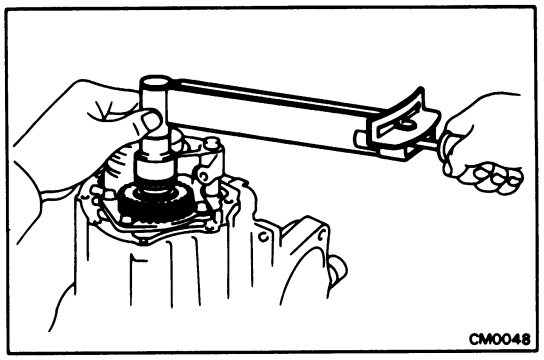

36. INSTALL LOCK NUT

(a) Engage the gear double meshing.

(b) Install and torque the nut.

Torque: 1,200 kg-cm (87 ft-lb, 118 N·m)

(c) Disengage the gear double meshing.

(d) Stake the lock nut.

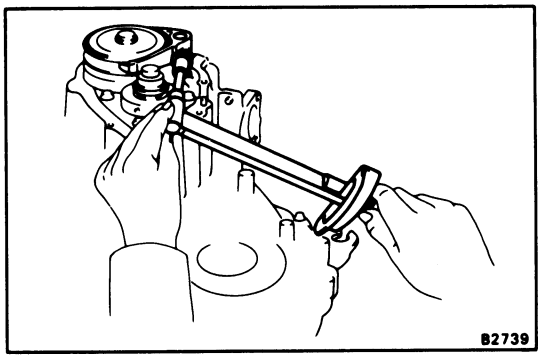

37. INSTALL BOLT

Torque: 160 kg-cm (12 ft-lb, 16 N·m)

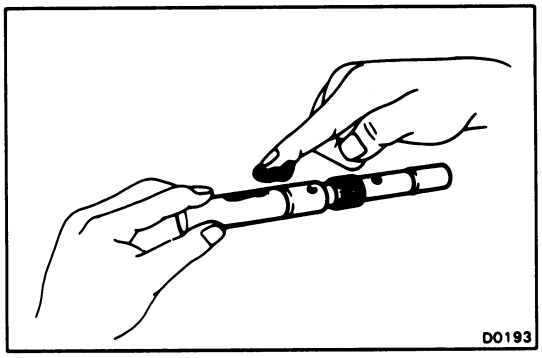

38. ASSEMBLE SHIFT AND SELECT LEVER SHAFT ASSEMBLY

(a) Apply MP grease to the shaft.

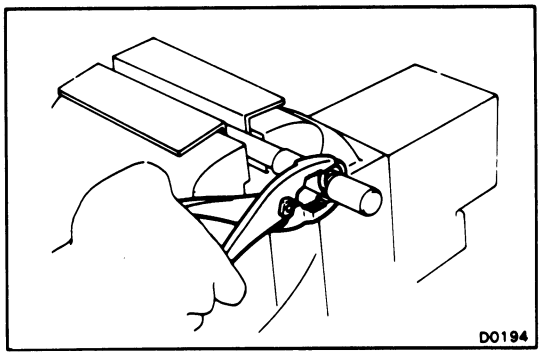

(b) Install the snap ring to the shaft.

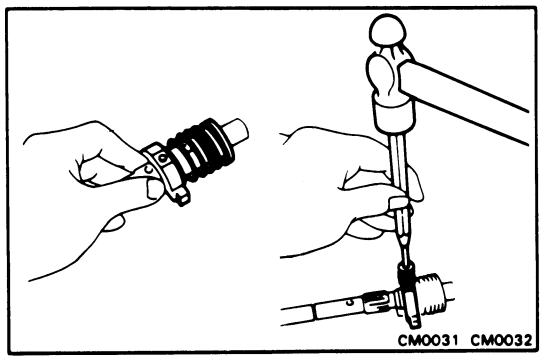

(c) Install the spring seat, compression spring and select inner lever.

(d) Using a pin punch and hammer, drive in the slotted spring pin.

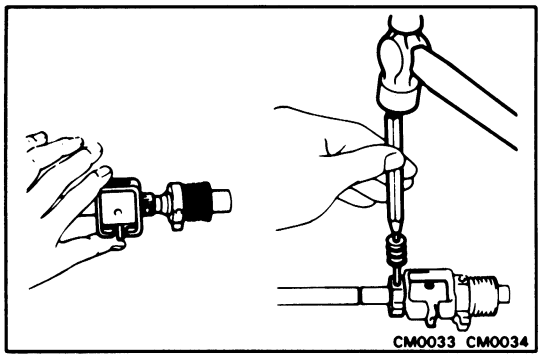

(e) Align the interlock plate with No. 1 shift inner lever and install it.

(f) Install No. 2 shift inner lever.

(g) Using a pin punch and hammer, drive in the slotted spring pins.

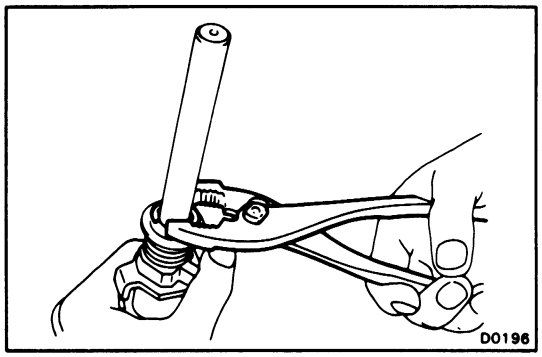

(h) Install the compression spring, spring seat and E-ring.

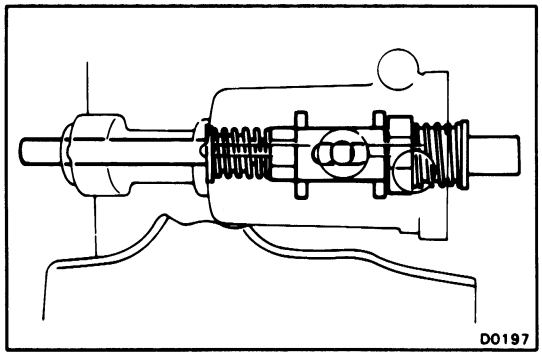

39. INSTALL SHIFT AND SELECT LEVER SHAFT ASSEMBLY

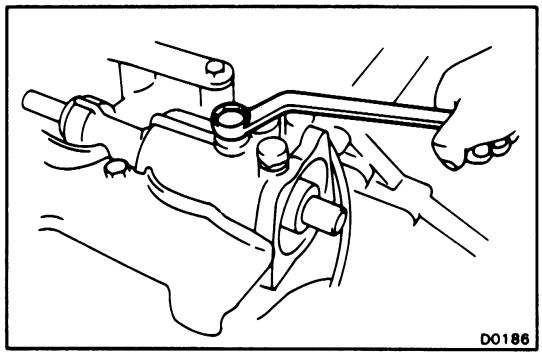

40. INSTALL LOCK BOLT

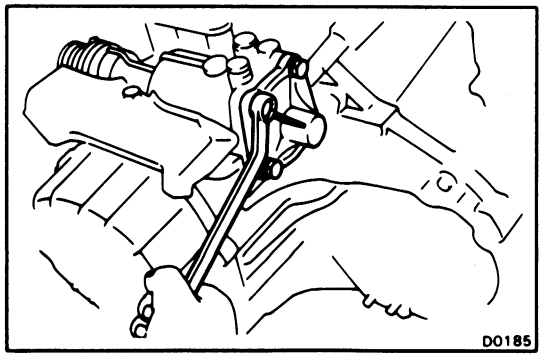

41. INSTALL CONTROL SHAFT COVER

(a) Place a new gasket in position on the control shaft cover.

(b) Install the control shaft cover.

(c) Apply liquid sealer to the bolt threads.

Sealant: Part No. 08833-00080, THREE BOND 1344, LOCTITE 242 or equivalent

(d) Install and torque the bolts.

Torque: 200 kg-cm (14 ft-lb, 20 N·m)

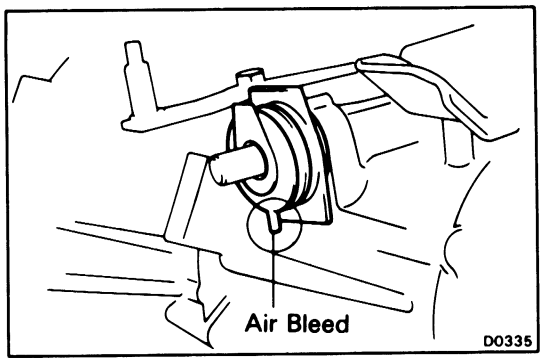

42. INSTALL SHIFT LEVER

(a) Install the boot to the control shaft oil seal.

NOTE: Make sure to install the boot in the correct direction. Position the air bleed of the boot downward.

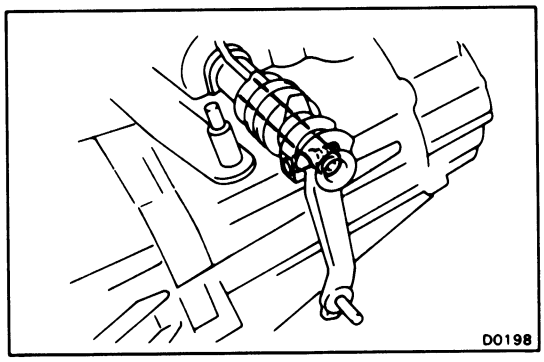

(b) Fit the pin's groove into the shaft's notch and tap on with a hammer.

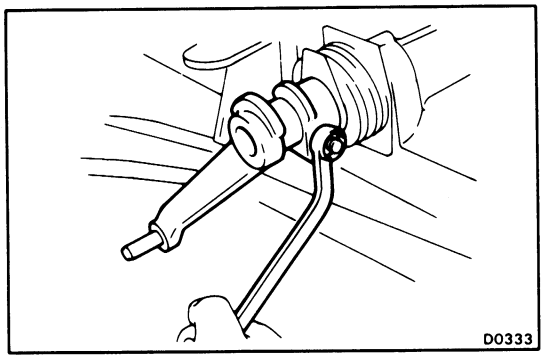

(c) Install the nut. Torque the nut.

Torque: 120 kg-cm (9 ft-lb, 12 N·m)

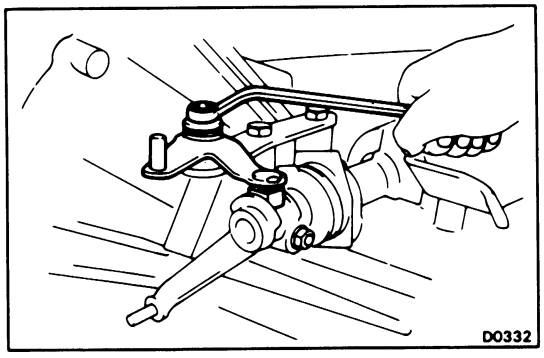

43. INSTALL SELECTING BELLCRANK

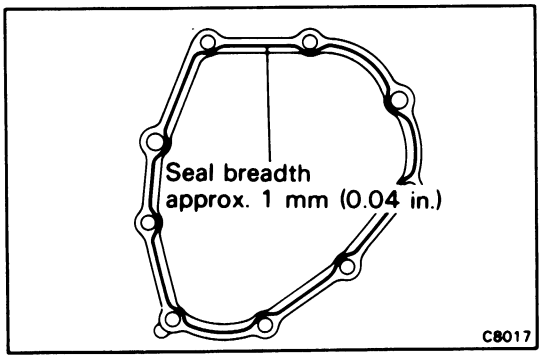

44. INSTALL TRANSMISSION CASE COVER

(a) Remove any packing material and be careful not to drop oil on the contacting surfaces of the transmission case or case cover.

(b) Apply seal packing to the transmission case as shown in the figure.

Seal packing: Part No. 08826-00090, THREE BOND 1281 or equivalent

NOTE: Install the transmission case cover as soon as the seal packing is applied.

(c) Install and torque the nine bolts.

Torque: 185 kg-cm (13 ft-lb, 18 N·m)

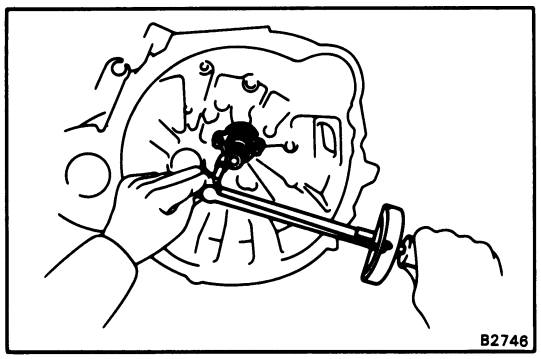

45. INSTALL FRONT BEARING RETAINER

Torque: 110 kg-cm (8 ft-lb, 11 N·m)

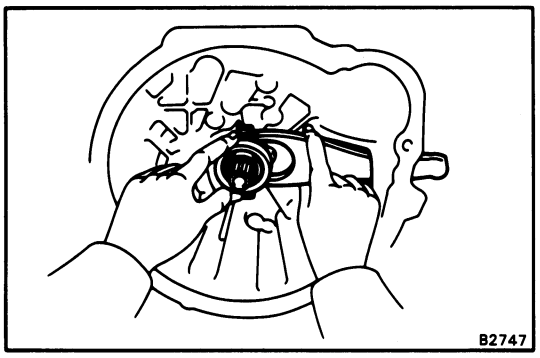

46. INSTALL RELEASE FORK AND BEARING

Apply molybdenum disulphide lithium base grease to the following parts:

- Input shaft spline
- Release fork contact surface

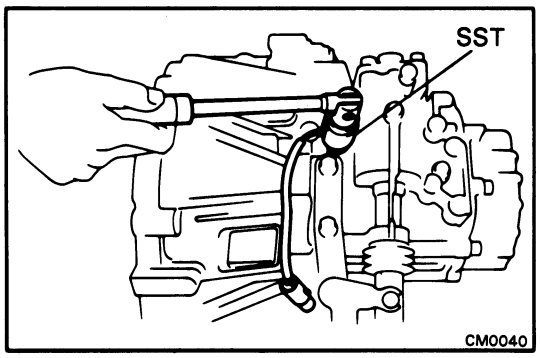

47. INSTALL BACK-UP LIGHT SWITCH

Using SST, install the back-up light switch.

SST 09817-16011

Torque: 410 kg-cm (30 ft-lb, 40 N·m)

48. INSTALL SPEEDOMETER DRIVEN GEAR

Differential

REMOVAL OF DIFFERENTIAL

1. **REMOVE TRANSAXLE**
   (See pages MT-3 to 5)

2. **REMOVE DIFFERENTIAL ASSEMBLY**
   (See steps 1 to 25 on pages MT-10 to 14)

REPLACEMENT OF DIFFERENTIAL

(See pages AT-131 to 133)

ADJUSTMENT OF DIFFERENTIAL CASE

(See pages AT-134, 135)

INSTALLATION OF DIFFERENTIAL

1. **INSTALL DIFFERENTIAL ASSEMBLY TO TRANSAXLE**
   (See steps 18 to 37 and 39 to 48 on pages MT-27 to 36)

2. **INSTALL TRANSAXLE**
   (See pages MT-37 to 40)

E51 TRANSAXLE

COMPONENTS

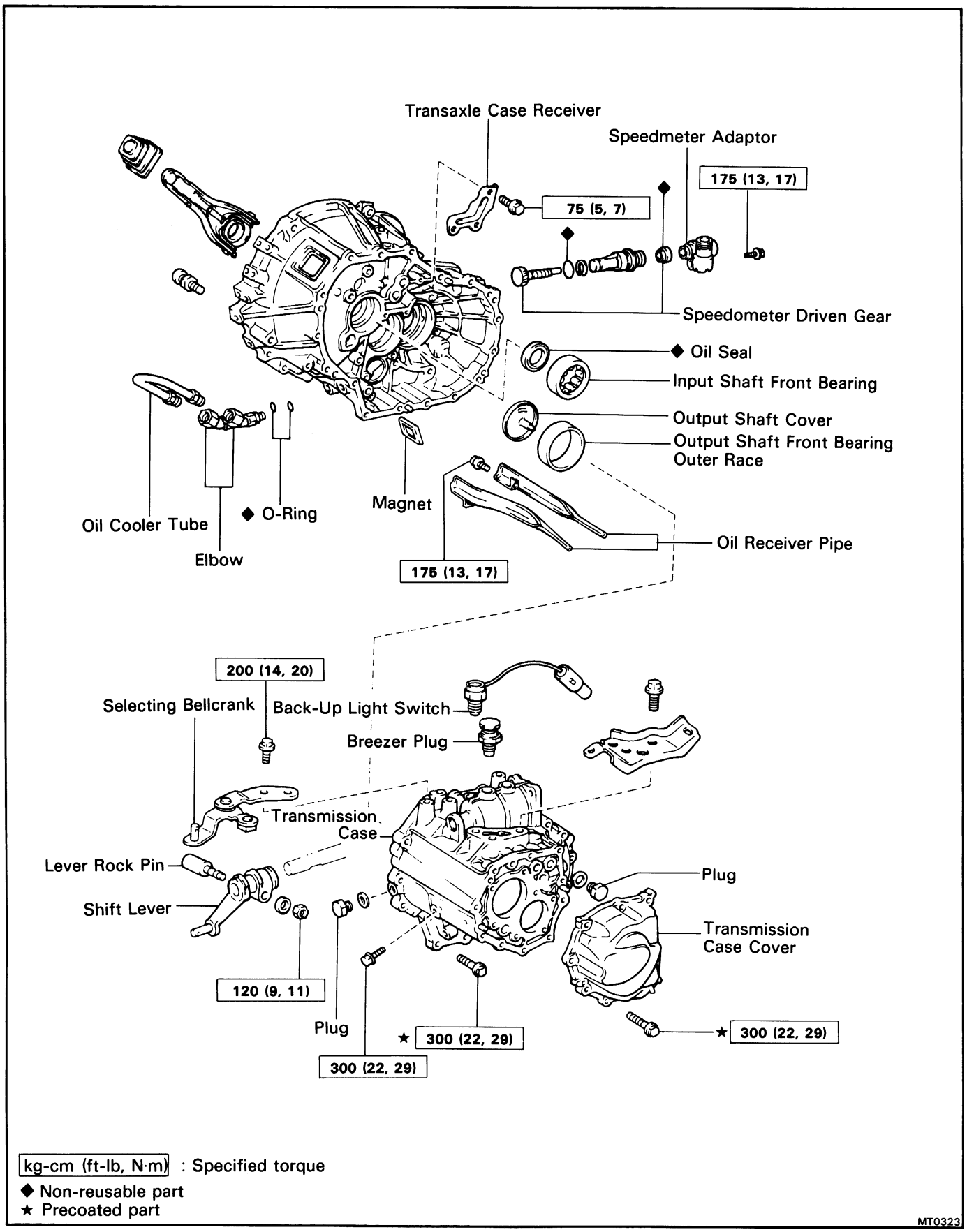

kg-cm (ft-lb, N·m) : Specified torque

◆ Non-reusable part

★ Precoated part

MT0323

COMPONENTS (Cont'd)

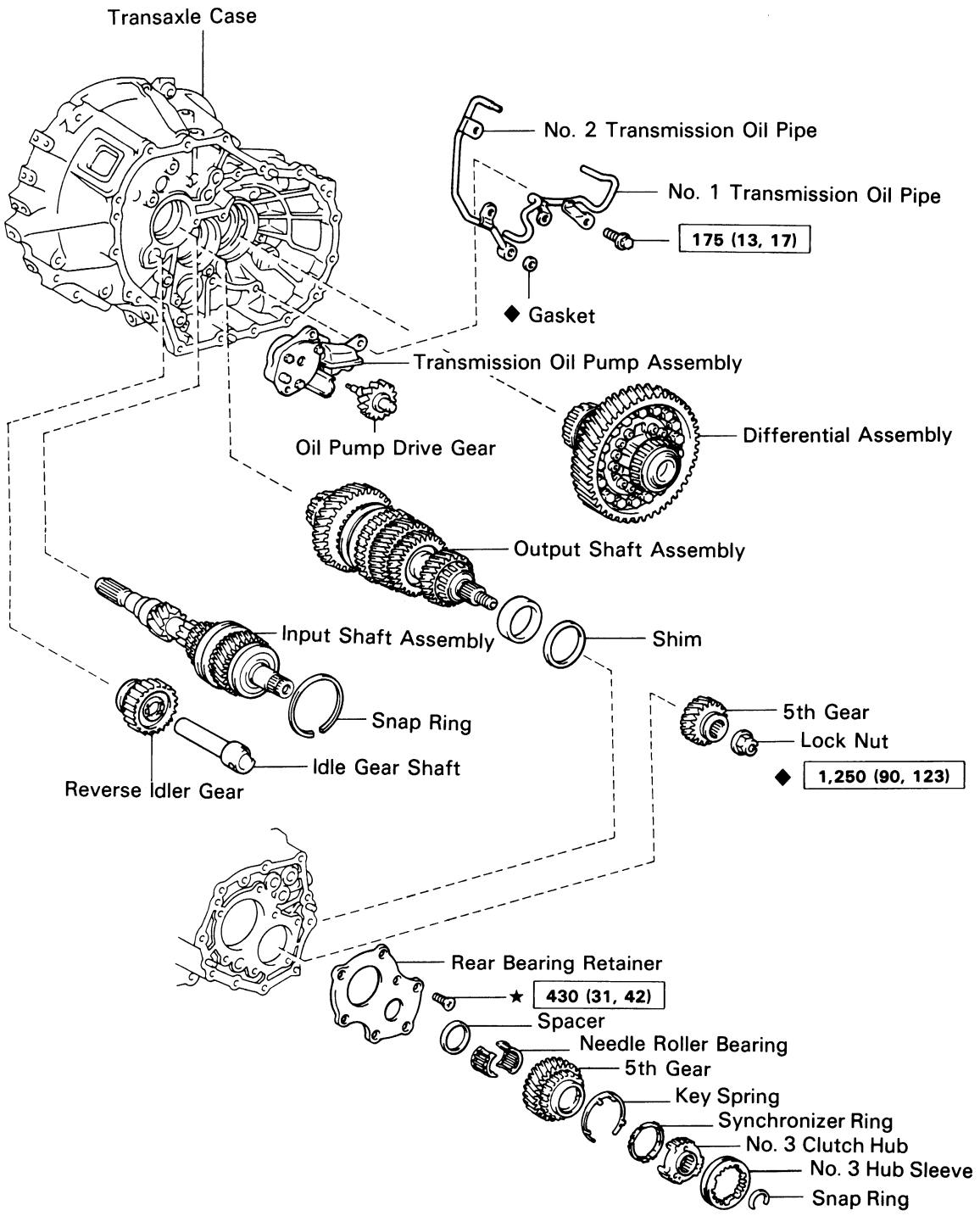

kg-cm (ft-lb, N·m) : Specified torque

◆ Non-reusable part

★ Precoated part

E8718

COMPONENTS (Cont'd)

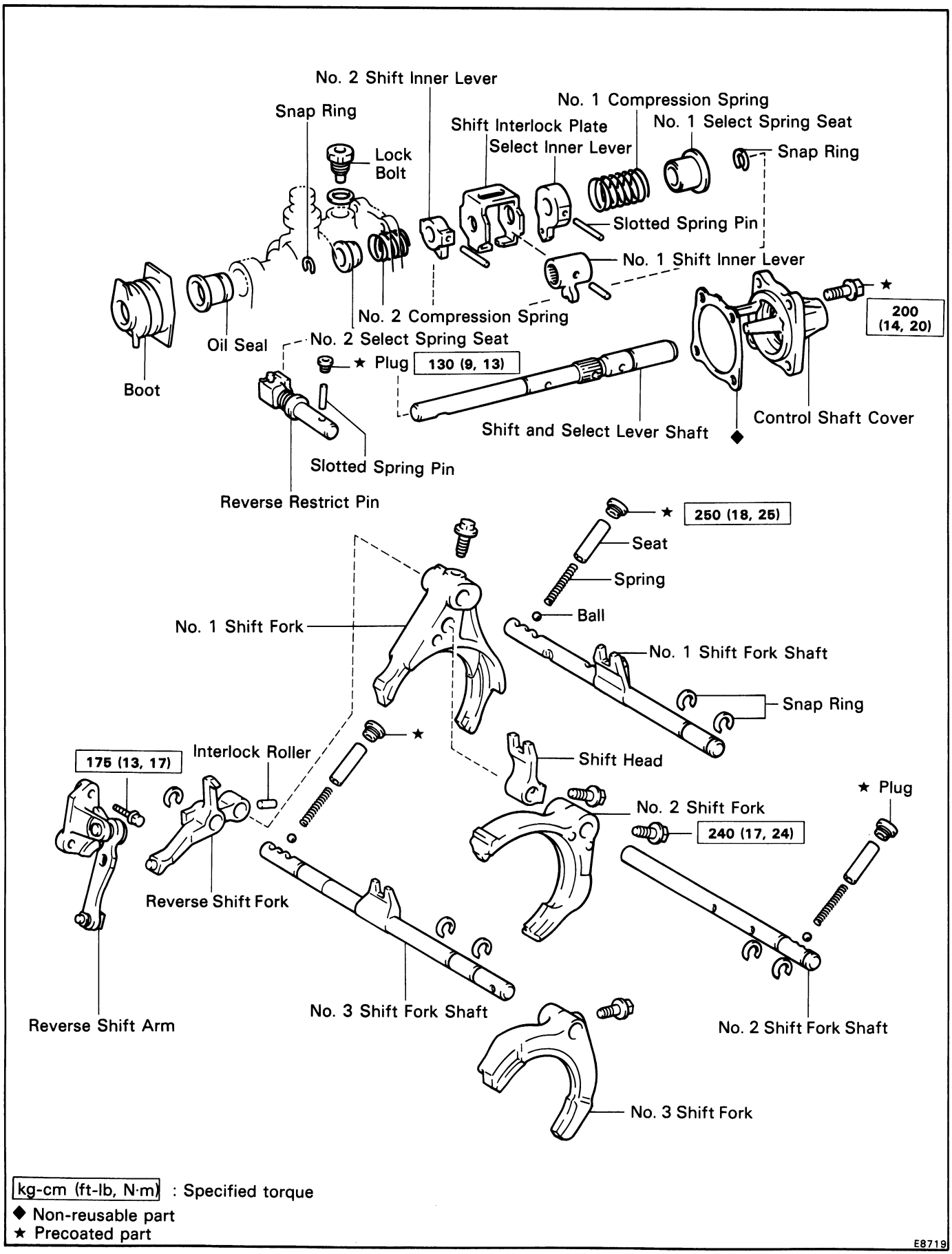

kg-cm (ft-lb, N·m) : Specified torque

◆ Non-reusable part

★ Precoated part

E8719

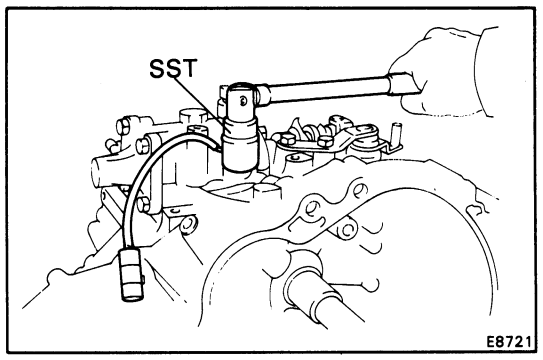

REMOVAL OF COMPONENT PARTS

(See pages MT-38 to 40)

1. REMOVE RELEASE FORK AND BEARING

2. REMOVE BACK-UP LIGHT SWITCH

Using SST, remove the Back-up light switch.

SST 09817-16011

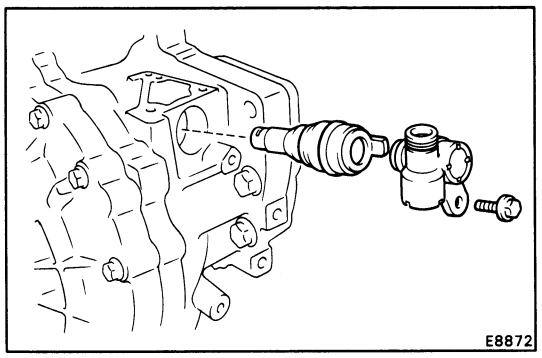

3. REMOVE SPEEDOMETER DRIVEN GEAR

(a) Remove the set bolt and speedometer adaptor.

(b) Remove the speedometer driven gear.

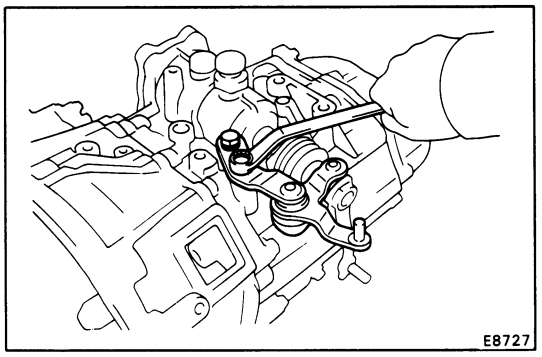

4. REMOVE SELECTING BELLCRANK ASSEMBLY

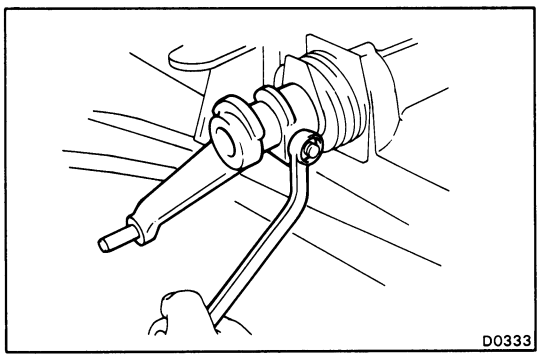

5. REMOVE SHIFT LEVER

(a) Remove the shift lever set nut.

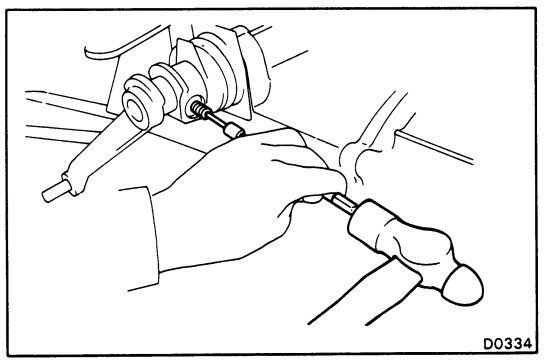

(b) Using a pin punch and hammer, tap out the lock pin.

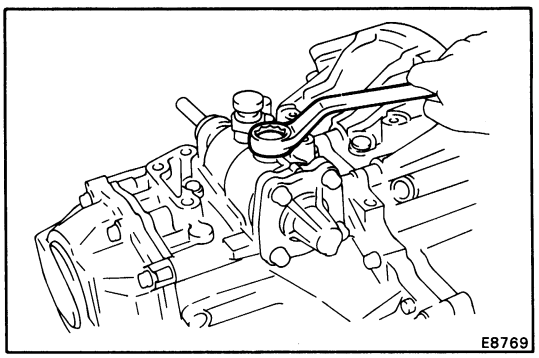

6. REMOVE LOCK BOLT

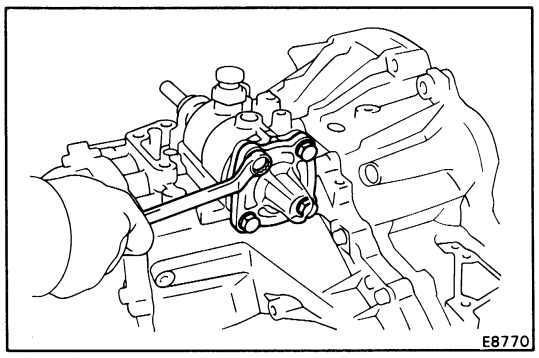

7. REMOVE CONTROL SHAFT COVER

Remove the bolts holding the control shaft cover.

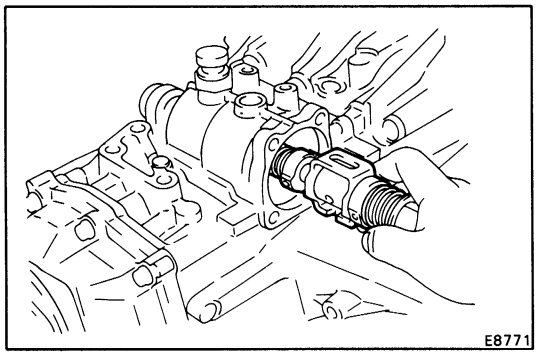

8. REMOVE SHIFT AND SELECT LEVER SHAFT ASSEMBLY

9. REMOVE TRANSMISSION CASE COVER

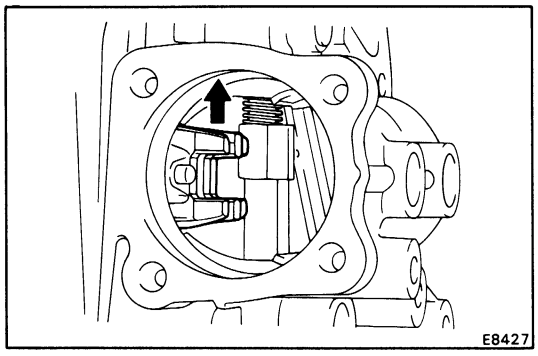

10. REMOVE LOCK NUT

(a) Unstake the lock nut.

(b) Engage the gear double meshing.

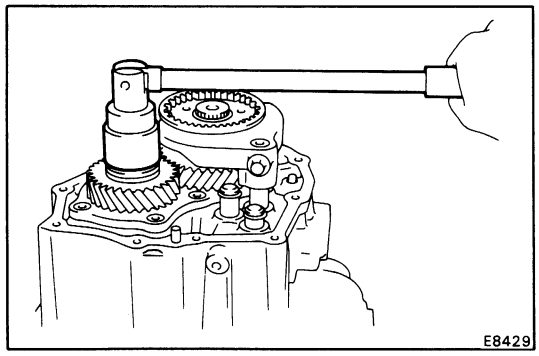

(c) Remove the lock nut.

(d) Disengage the gear double meshing.

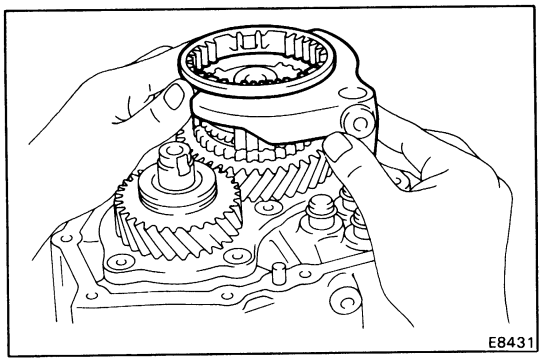

11. REMOVE NO. 3 HUB SLEEVE AND NO. 3 SHIFT FORK

(a) Remove the No. 3 shift fork set bolt.

(b) Remove the No. 3 hub sleeve and No. 3 shift fork.

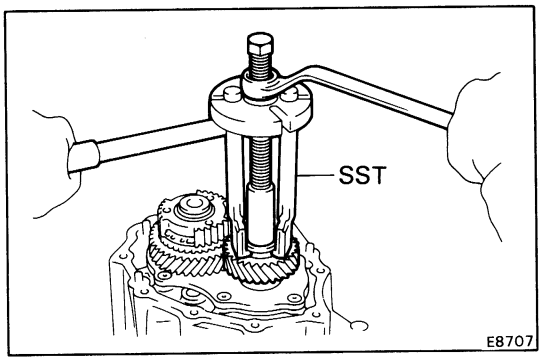

12. REMOVE FIFTH DRIVEN GEAR

Using SST, remove the 5th driven gear.

SST 09310-17010 (09310-07010, 09310-07020, 09310-07040, 09310-07050)

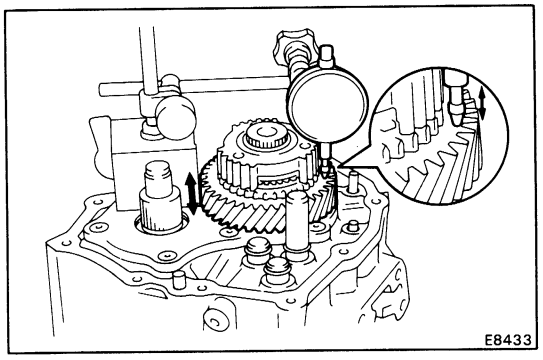

13. MEASURE FIFTH GEAR THRUST CLEARANCE AND OIL CLEARANCE

(a) Using a dial indicator, measure the thrust clearance.

Standard clearance: 0.10 – 0.57 mm (0.0039 – 0.0224 in.)
Maximum clearance: 0.65 mm (0.0256 in.)

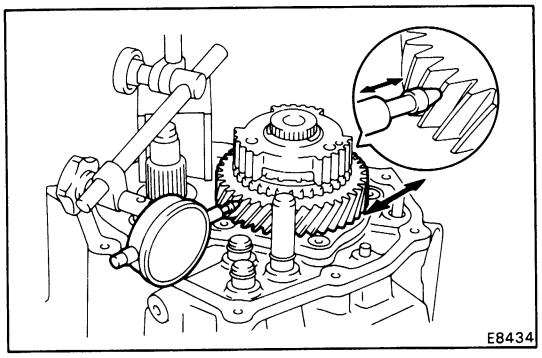

(b) Using a dial indicator, measure the oil clearance.

Standard clearance: 0.009 – 0.050 mm (0.0004 – 0.0020 in.)
Maximum clearance: 0.070 mm (0.0028 in.)

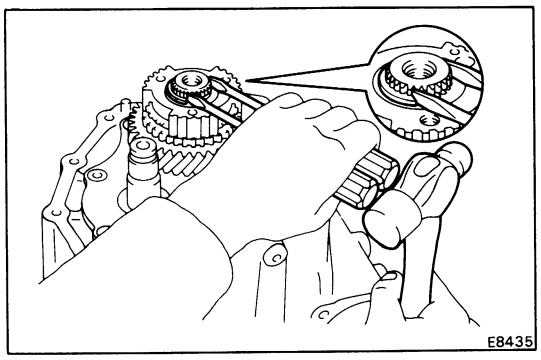

14. REMOVE NO. 3 CLUTCH HUB AND FIFTH GEAR

(a) Using two screwdrivers and a hammer, tap out the snap ring.

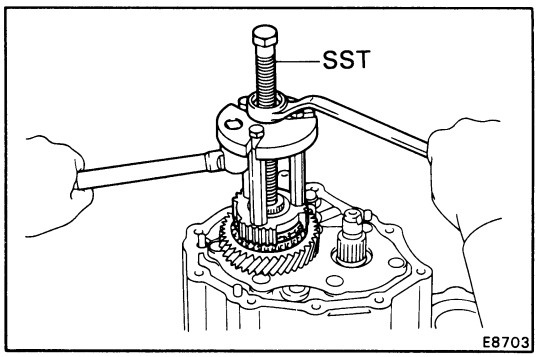

(b) Using SST, remove the No. 3 clutch hub with synchronizer ring and 5th gear.

SST 09310-17010 (09310-07010, 09310-07020, 09310-07040, 09310-07050)

15. REMOVE NEEDLE ROLLER BEARING AND SPACER

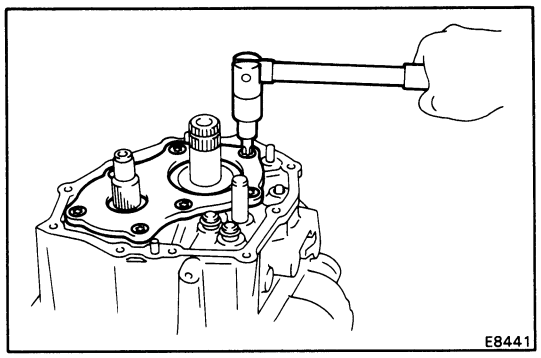

16. REMOVE REAR BEARING RETAINER

(a) Using a torx socket wrench, remove the seven torx screws and bearing retainer.

Torx wrench T45 09042-00050

(b) Remove the adjust shim.

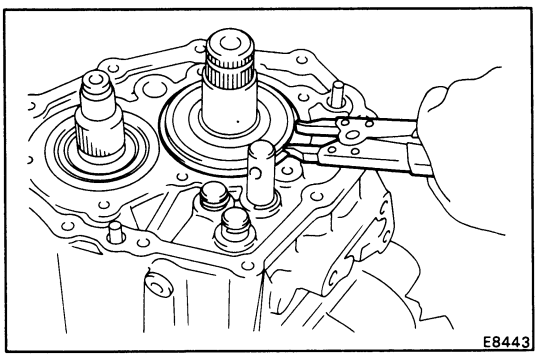

17. REMOVE SNAP RING

(a) Using snap ring pliers, remove the snap ring.

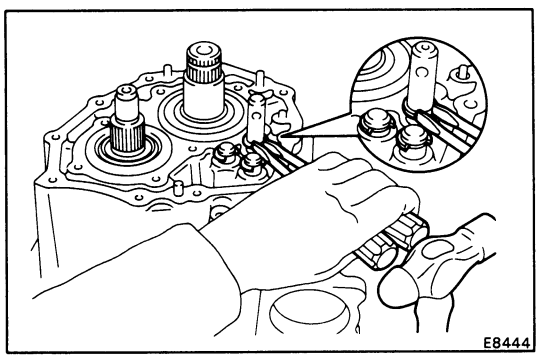

(b) Using two screwdrivers and a hammer, remove the three snap rings.

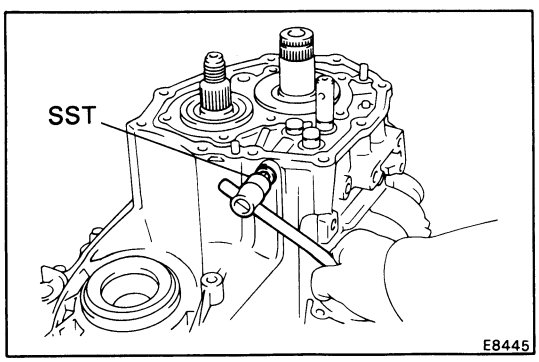

18. REMOVE PLUG, SEAT, SPRING AND LOCKING BALL

(a) Using SST, remove the plug.

SST 09313-30021

(b) Using a magnetic finger, remove the seat, spring and locking ball.

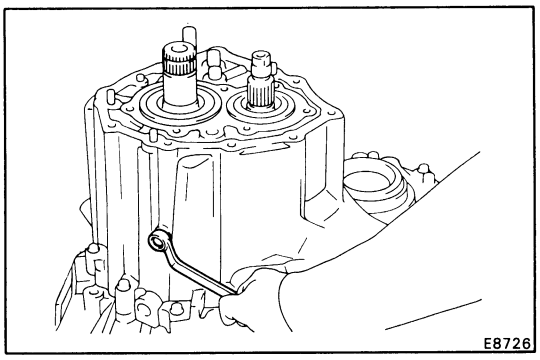

19. REMOVE REVERSE IDLER GEAR SHAFT RETAINING BOLT

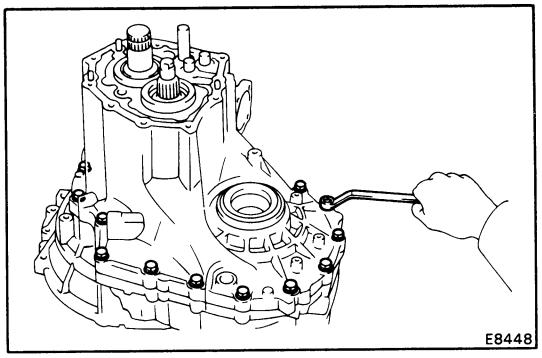

20. REMOVE TRANSMISSION CASE

Remove the seventeen bolts and tap off the case with a plastic hammer.

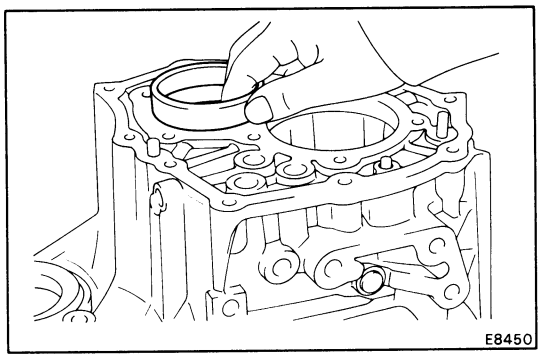

21. REMOVE OUTPUT SHAFT REAR TAPERED ROLLER BEARING OUTER RACE

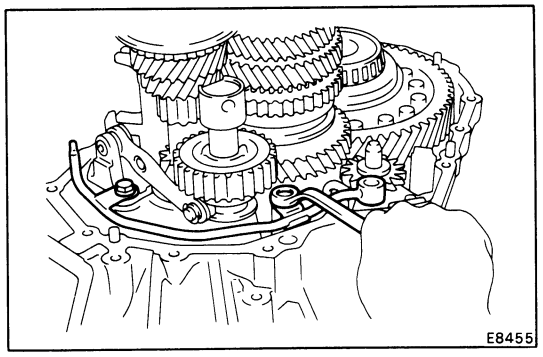

22. REMOVE NO. 2 OIL PIPE

(a) Remove the gasket.

(b) Remove the two bolts and oil pipe.

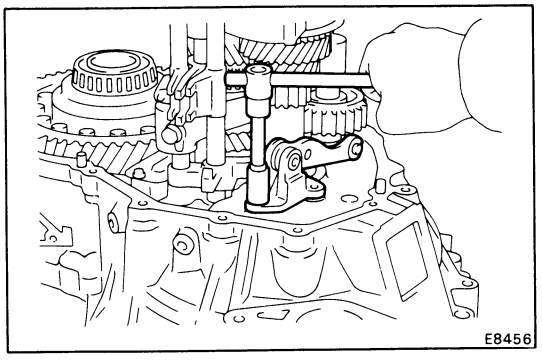

23. REMOVE REVERSE SHIFT ARM BRACKET

Remove the two bolts and pull off the bracket.

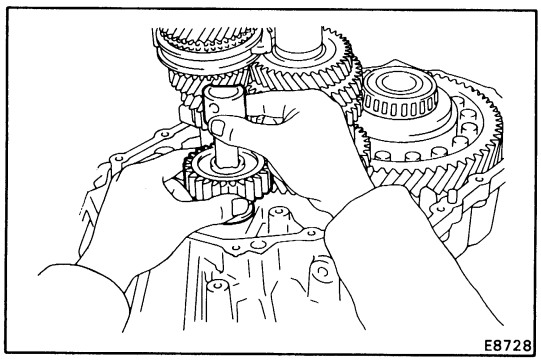

24. REMOVE REVERSE IDLER GEAR AND SHIFT

Pull out the shift, remove the reverse idler gear.

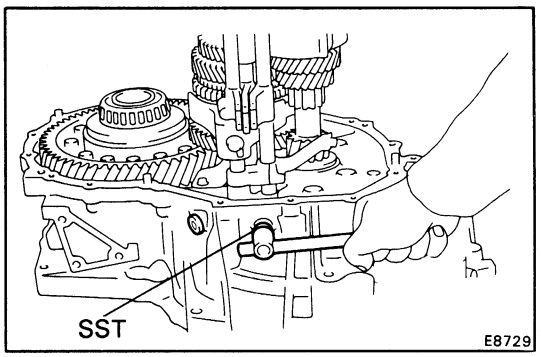

25. REMOVE STRAIGHT SCREW, LOCKING BALLS AND SPRINGS

(a) Using SST, remove the two plugs.

SST 09313-30021

(b) Using a magnetic finger, remove the two spring seats, springs and balls.

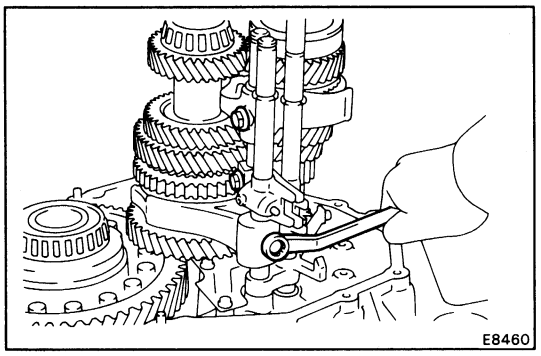

26. REMOVE SET BOLT

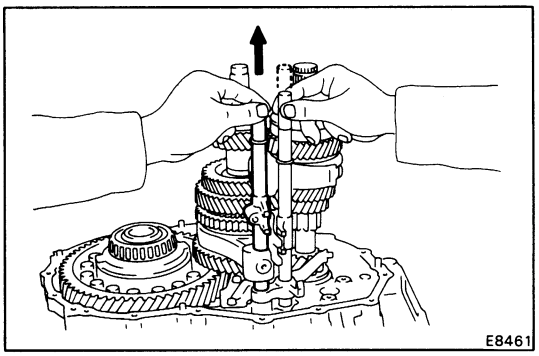

27. REMOVE NO. 1 SHIFT FORK SHAFT

Pull up No. 3 shift fork shaft, remove the No. 1 shift fork shaft.

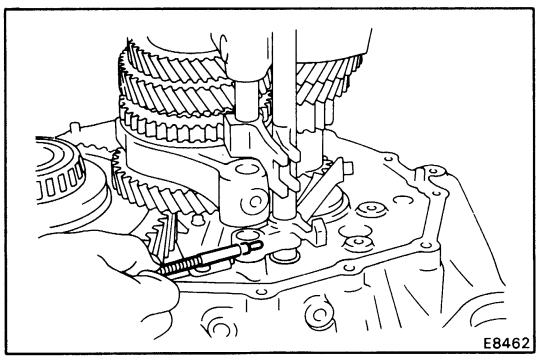

28. REMOVE INTERLOCK ROLLER

Using a magnetic finger, remove the interlock roller from the reverse shift fork.

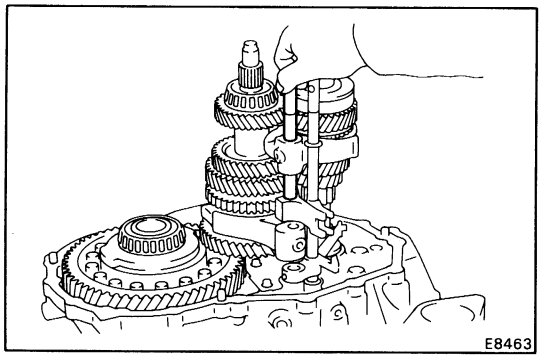

29. REMOVE NO. 2 SHIFT FORK SHAFT, SHIFT HEAD AND NO. 1 SHIFT FORK

(a) Pull out the No. 2 shift fork shaft.

(b) Remove the shift head and No. 1 shift fork.

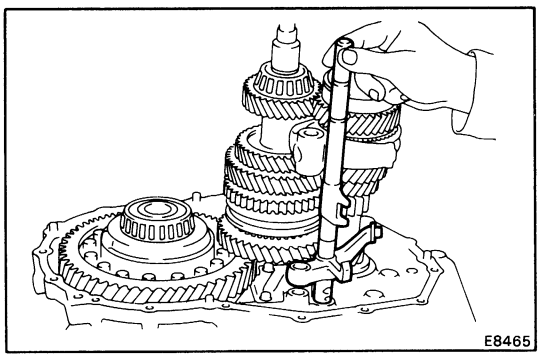

30. REMOVE NO. 3 SHIFT FORK SHAFT WITH REVERSE SHIFT FORK AND NO. 2 SHIFT FORK

(a) Pull out the No. 3 shift fork shaft with reverse shift fork.

(b) Remove the No. 2 shift fork.

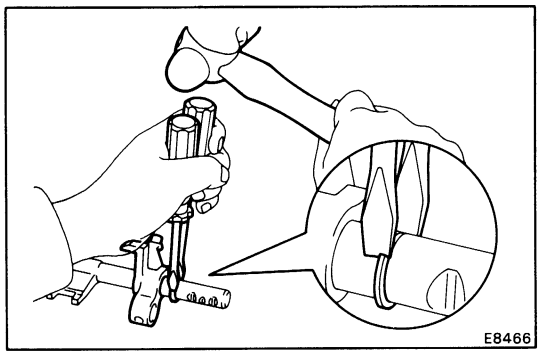

31. REMOVE SNAP RINGS

(a) Using two screwdrivers and a hammer, remove the snap ring and reverse shift fork from the No. 3 shift fork shaft.

(b) Using two screwdrivers and a hammer, remove the snap rings from the No. 1, No. 2 and No. 3 shift fork shafts.

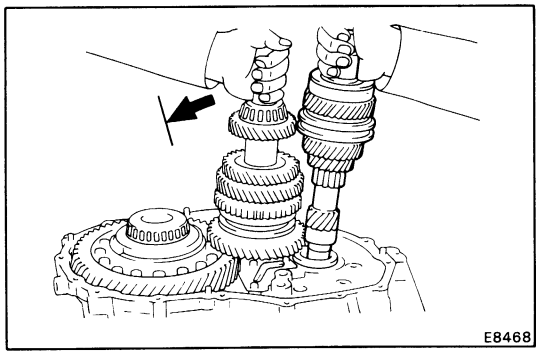

32. REMOVE INPUT AND OUTPUT SHAFT ASSEMBLY

(a) Leaning the output shaft to the differential side, remove the input shaft assembly.

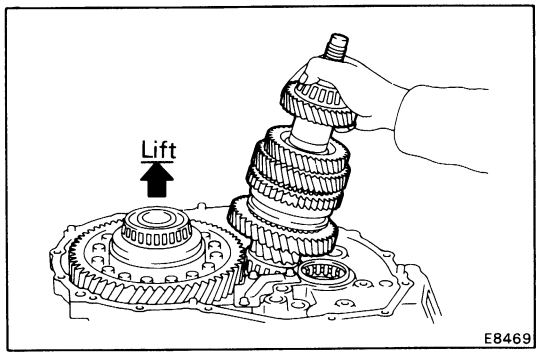

(b) Lift up the differential case assembly, remove the output shaft.

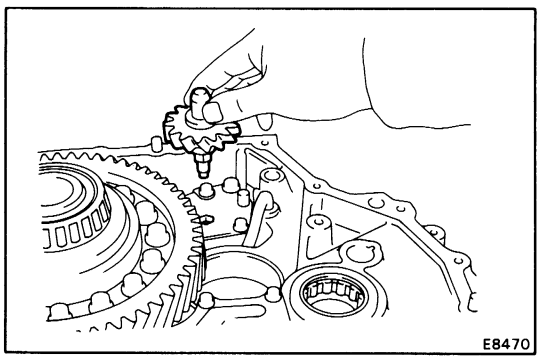

33. REMOVE DIFFERENTIAL ASSEMBLY

(a) Remove the oil pump drive gear.

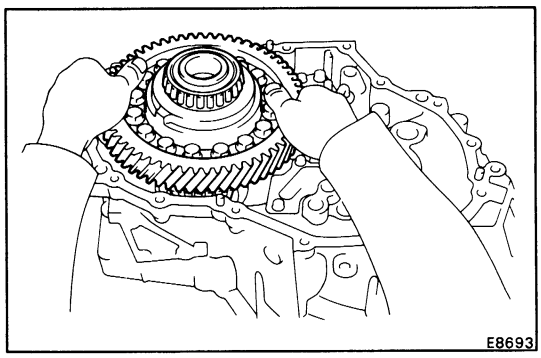

(b) Remove the differential case assembly.

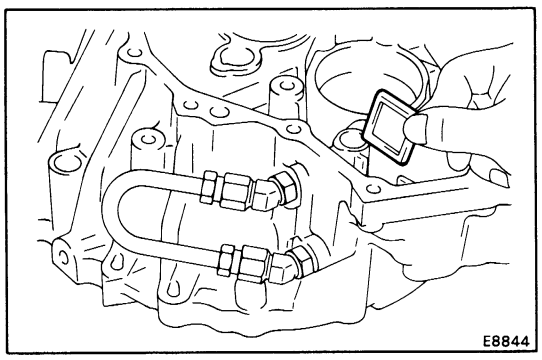

34. REMOVE MAGNET FROM TRANSAXLE CASE

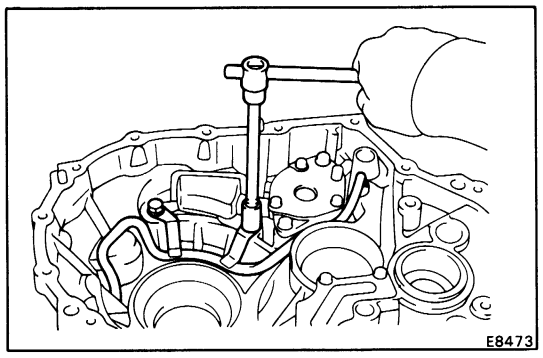

35. REMOVE OIL PUMP ASSEMBLY

(a) Remove the two bolts and oil pipe.

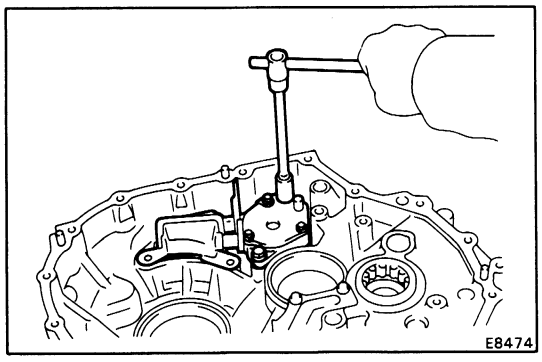

(b) Remove the two bolts and oil pump.

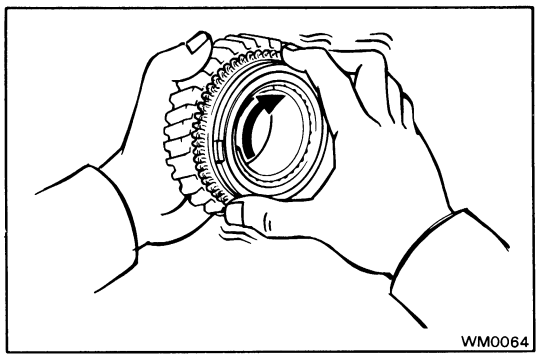

INSPECTION OF COMPONENT PARTS

1. INSPECT SYNCHRONIZER RING FOR FIFTH GEAR

(a) Check for wear or damage.

(b) Turn the ring and push it in to check the braking action.

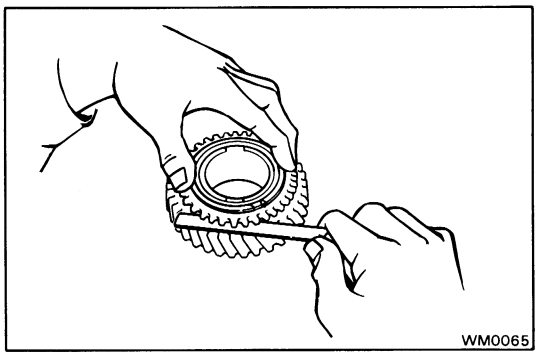

(c) Measure the clearance between the synchronizer ring back and the gear spline end.

Minimum clearance: 0.6 mm (0.024 in.)

If the clearance is less than the limit, replace the synchronizer ring.

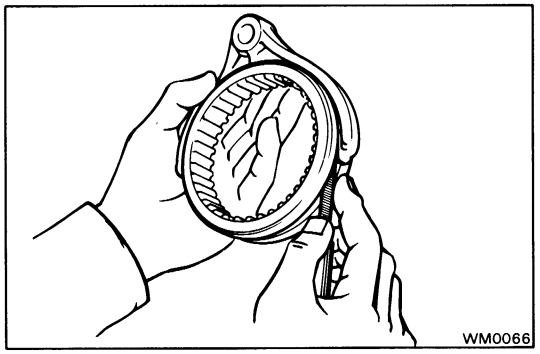

2. MEASURE CLEARANCE OF SHIFT FORKS AND HUB SLEEVE

Using a feeler gauge, measure the clearance between the hub sleeve and shift fork.

Maximum clearance: 1.0 mm (0.039 in.)

If the clearance exceeds the limit, replace the shift fork or hub sleeve.

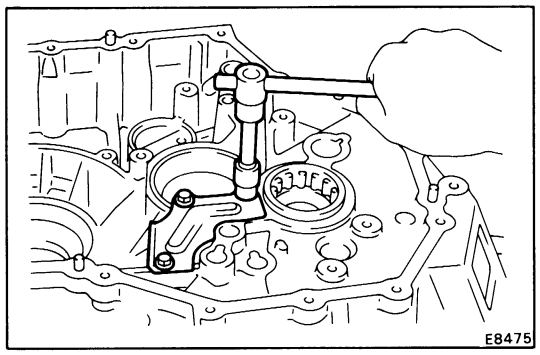

3. REMOVE TRANSAXLE CASE RECEIVER

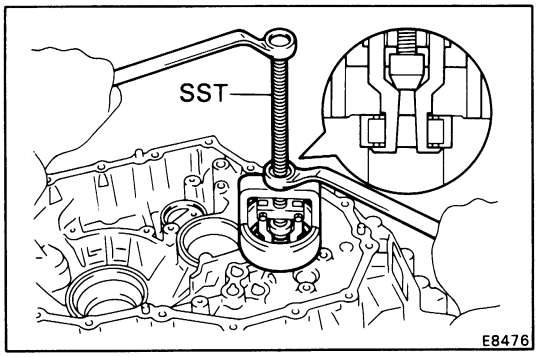

4. IF NECESSARY, REPLACE INPUT SHAFT BEARING AND OIL SEAL

(a) Using SST, pull out the bearing.

SST 09612-65014 (09612-01060)

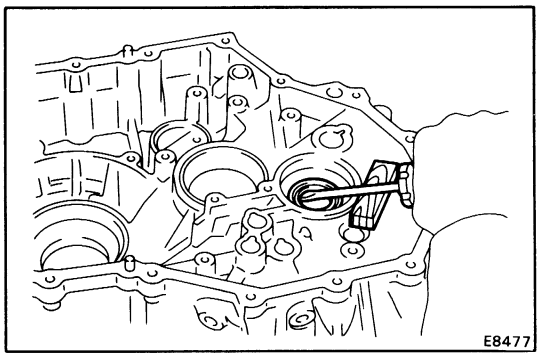

(b) Using a screwdriver, remove the oil seal.

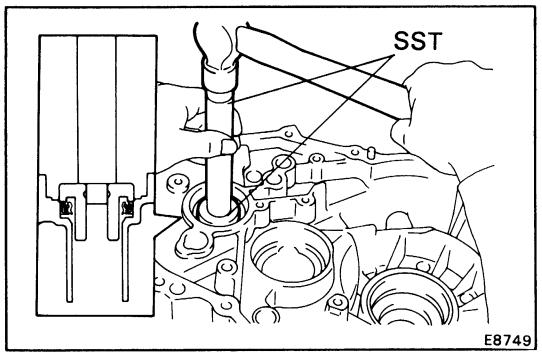

(c) Using SST, drive in a new oil seal.

SST 09608-12010 (09608-00020, 09608-00080)

(d) Coat the lip of seal with MP grease.

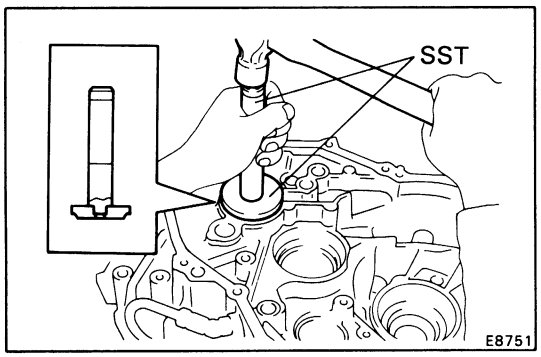

(e) Using SST, drive in a new bearing.

SST 09608-12010 (09608-00020, 09608-00060)

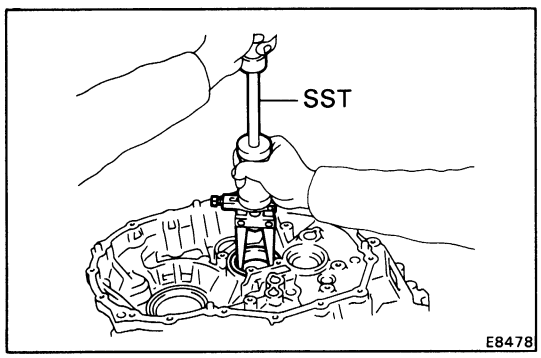

5. IF NECESSARY, REPLACE OUTPUT SHAFT FRONT OUTER RACE AND OUTPUT SHAFT COVER

(a) Using SST, pull out the outer race.

SST 09308-00010

(b) Remove the output shaft cover.

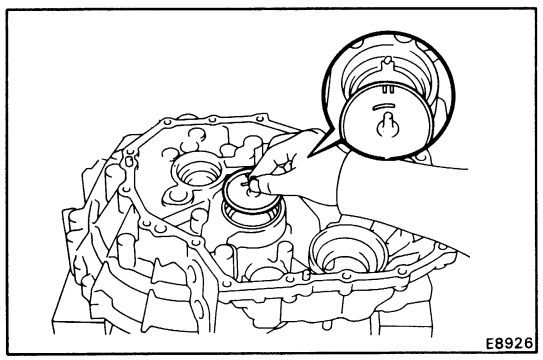

(c) Install the output shaft front cover.

NOTE: Install the shaft cover projection into the case side groove.

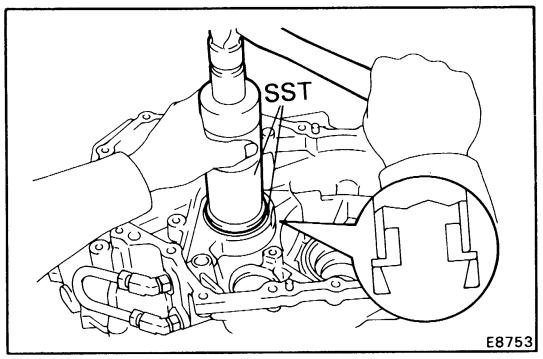

(d) Using SST, press in a new outer race.

SST 09316-60010 (09316-00010, 09316-00020)

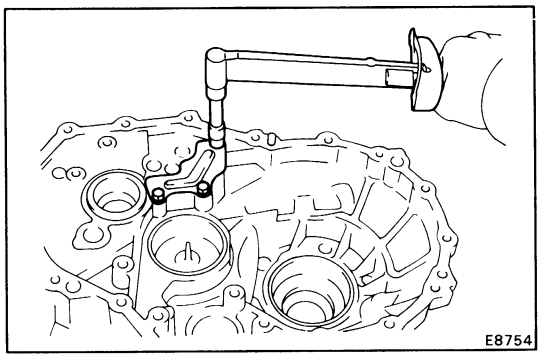

6. INSTALL AND TORQUE TRANSAXLE CASE RECEIVER

Torque: 75 kg-cm (65 in.-lb, 7.4 N·m)

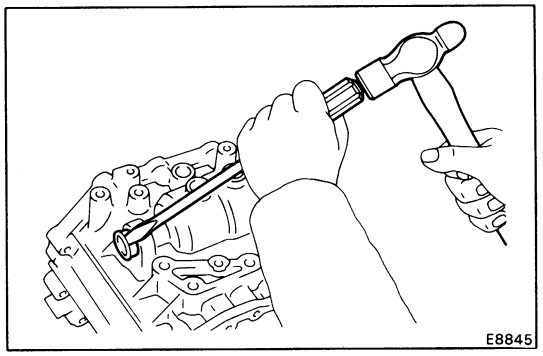

7. IF NECESSARY, REPLACE SHIFT CONTROL SHAFT OIL SEAL

(a) Using a screwdriver and hammer, remove the oil seal.

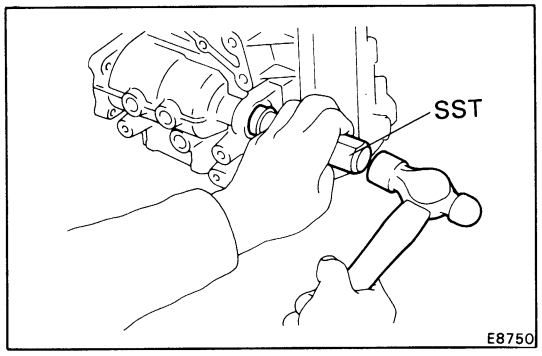

(b) Using SST, drive in the new oil seal.

SST 09517-36010

(c) Coat the lip of oil seal with MP grease.

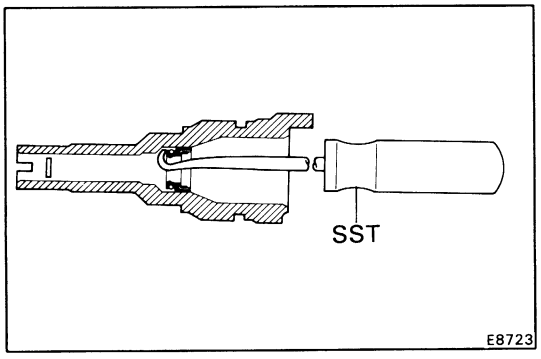

8. IF NECESSARY, REPLACE SPEEDOMETER DRIVEN GEAR OIL SEAL

(a) Using SST, pull out the oil seal.

SST 09921-00010

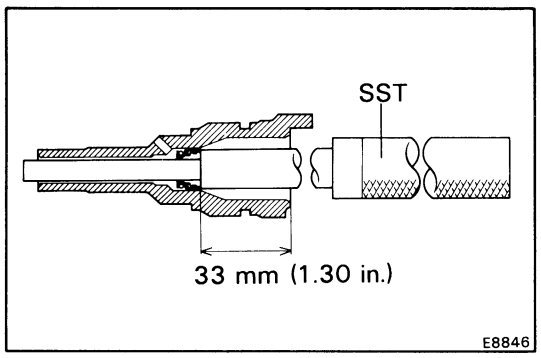

(b) Using SST, drive in a new oil seal.

SST 09201-60011

Drive in depth: 33 mm (1.30 in.)

(c) Coat the lip of oil seal with MP grease.

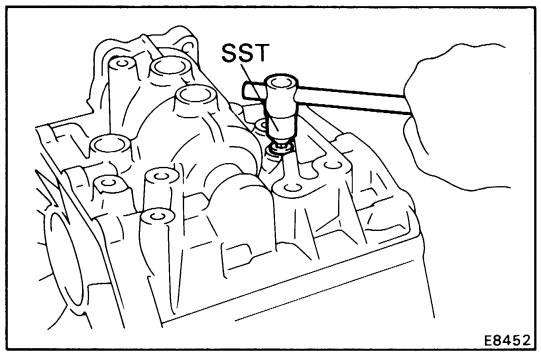

9. IF NECESSARY, REPLACE REVERSE RESTRICT PIN

(a) Using SST, remove the screw plug.

SST 09313-30021

(b) Using a pin punch and hammer, drive out the slotted spring pin.

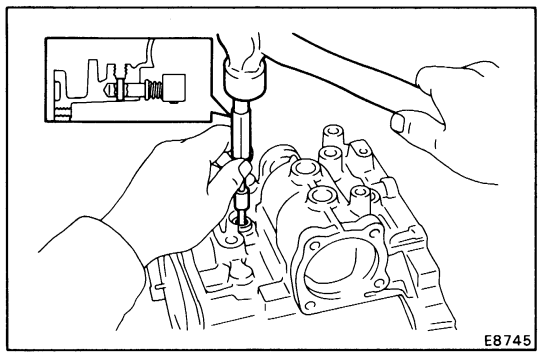

(c) Replace the reverse restrict pin.

(d) Using a pin punch and hammer, drive in the slotted spring pin.

(e) Apply liquid sealant to the plug threads.

Sealant: Part No. 08833-00080, THREE BOND 1344, LOCTITE 242 or equivalent

(f) Using SST, install the screw plug.

SST 09313-30021

INPUT SHAFT ASSEMBLY

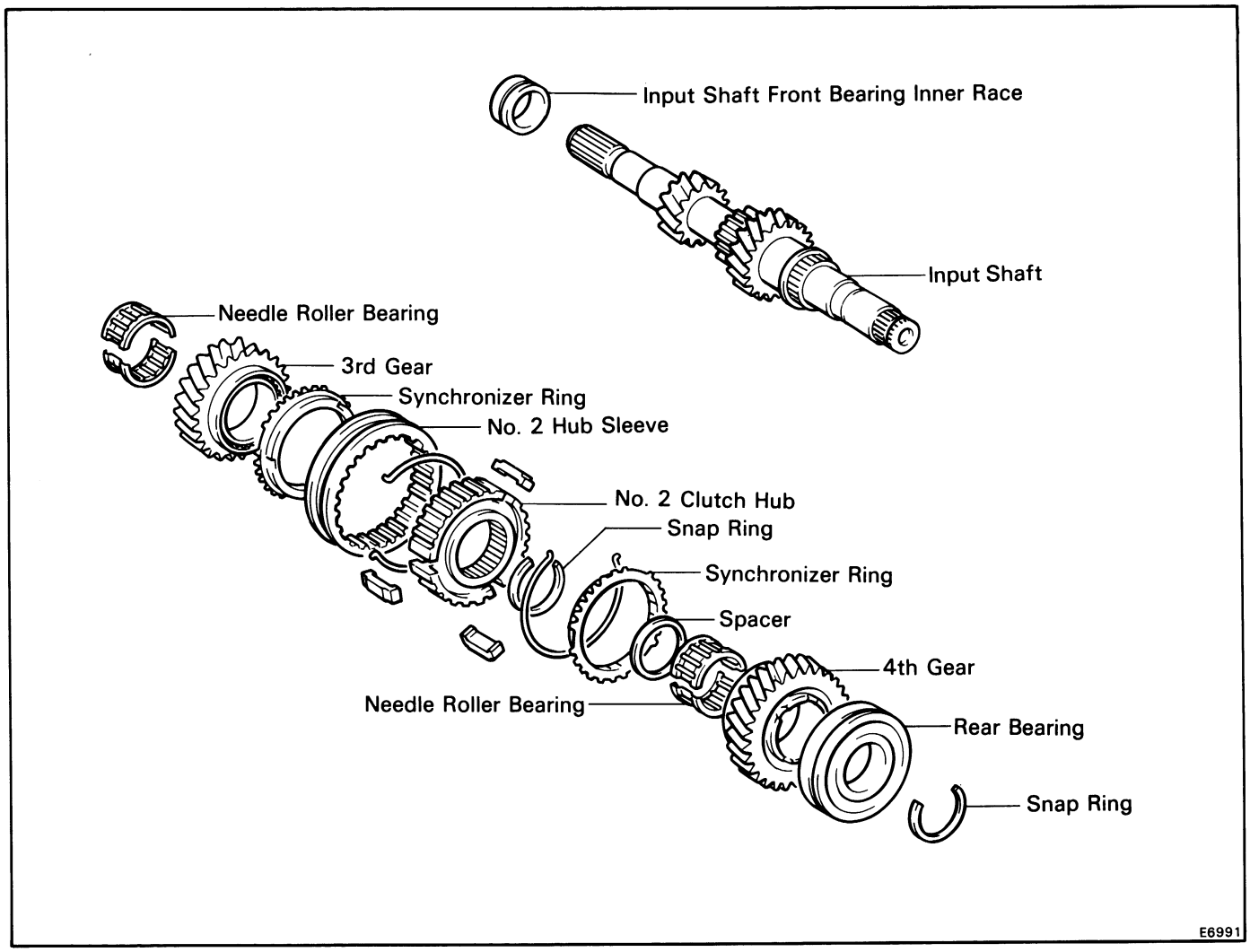

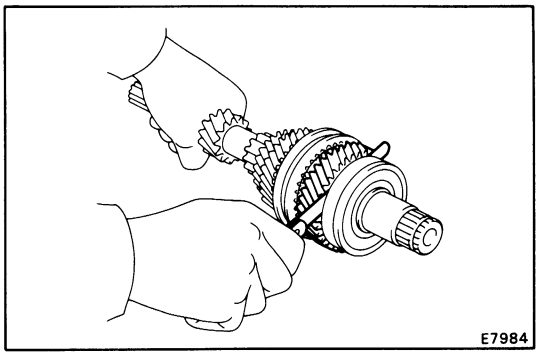

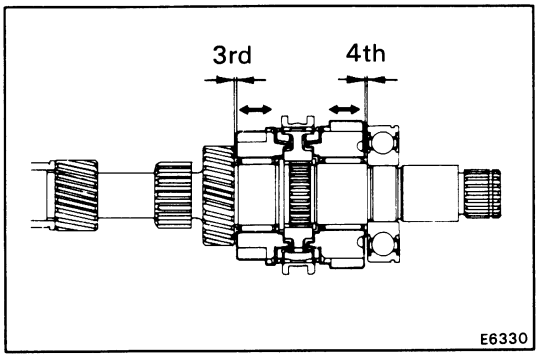

DISASSEMBLY OF INPUT SHAFT ASSEMBLY

1. MEASURE THIRD AND FOURTH GEAR THRUST CLEARANCE

Using a feeler gauge, measure the thrust clearance.

Standard clearance:

3rd gear	**0.10 – 0.35 mm (0.0039 – 0.0138 in.)**
4th gear	**0.10 – 0.55 mm (0.0039 – 0.0217 in.)**

Maximum clearance:

3rd gear	**0.40 mm (0.0157 in.)**
4th gear	**0.60 mm (0.0236 in.)**

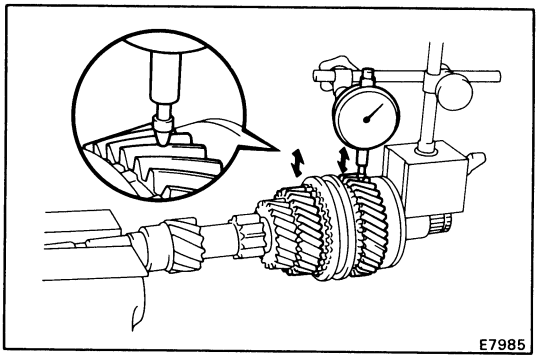

2. CHECK OIL CLEARANCE OF THIRD AND FOURTH GEAR

Using dial indicator, measure the oil clearance between the gear and shaft.

Standard clearance:

3rd gear	**0.009 – 0.053 mm (0.0004 – 0.0020 in.)**
4th gear	**0.009 – 0.051 mm (0.0004 – 0.0020 in.)**

Maximum clearance:

3rd and 4th gear 0.070 mm (0.0028 in.)

If clearance exceeds the limit, replace the gear, needle roller bearing or shaft.

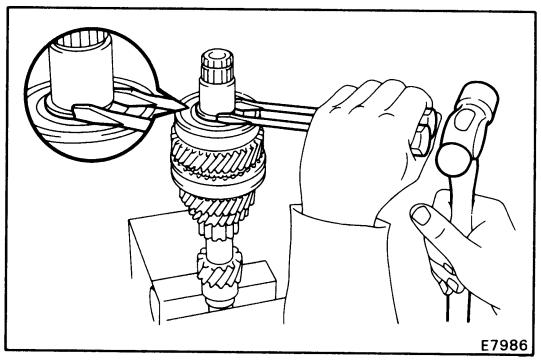

3. REMOVE SNAP RING

Using two screwdrivers and a hammer, tap out the snap ring.

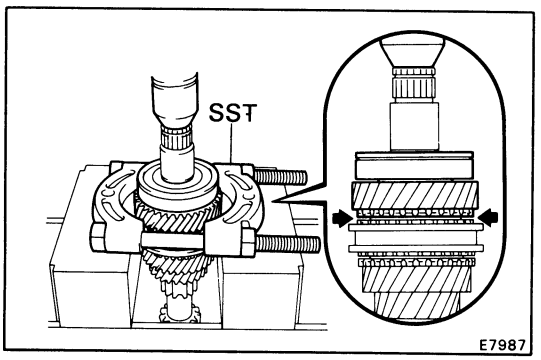

4. REMOVE RADIAL BALL BEARING AND FOURTH GEAR

Using SST and a press, remove the radial ball bearing.

SST 09950-00020

5. REMOVE NEEDLE ROLLER BEARINGS, SPACER AND SYNCHRONIZER RING

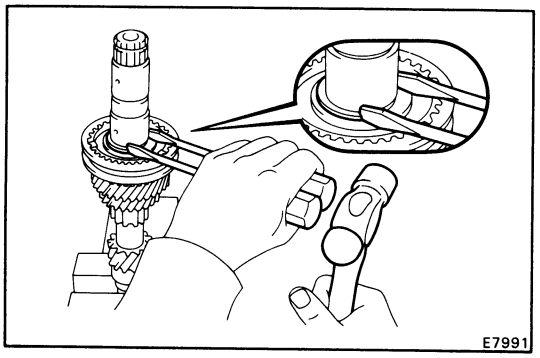

6. REMOVE SNAP RING

Using two screwdrivers and a hammer, tap out the snap ring.

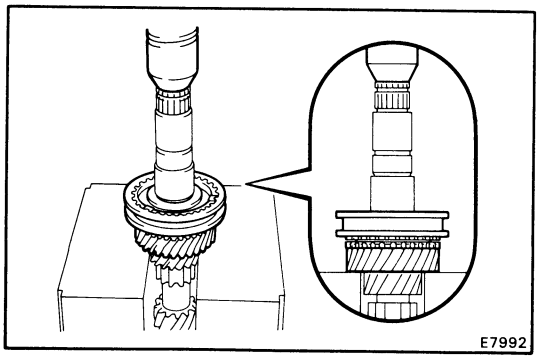

7. REMOVE NO. 2 CLUTCH HUB ASSEMBLY, SYNCHRONIZER RING AND THIRD GEAR

Using a press, remove No. 2 hub sleeve, 3rd gear, synchronizer ring and needle roller bearings.

8. REMOVE NEEDLE ROLLER BEARING

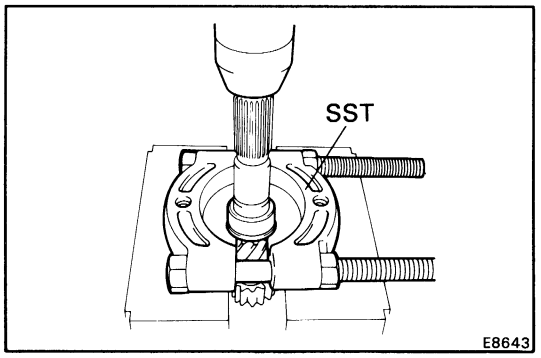

9. REMOVE INPUT SHAFT FRONT BEARING INNER RACE

Using SST and a press, remove the inner race.

SST 09950-00020

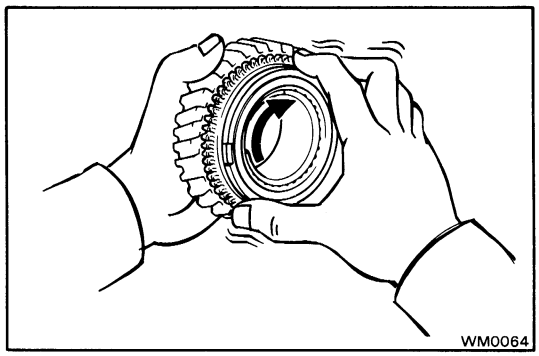

INSPECTION OF INPUT SHAFT COMPONENT PARTS

1. INSPECT SYNCHRONIZER RINGS

(a) Check for wear or damage.

(b) Turn the ring and push it in to check the braking action.

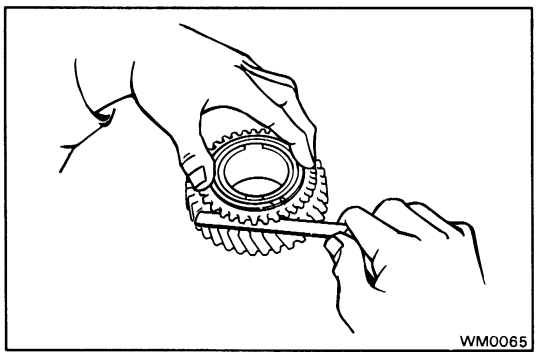

(c) Measure the clearance between the synchronizer ring back and the gear spline end.

Minimum clearance: 0.6 mm (0.024 in.)

If the clearance is less than the limit, replace the synchronizer ring.

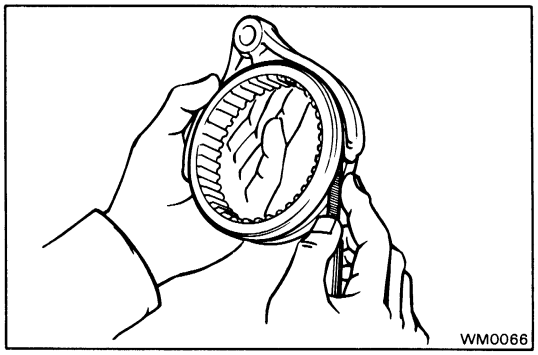

2. MEASURE CLEARANCE OF NO. 2 SHIFT FORK AND HUB SLEEVE

Using a feeler gauge, measure the clearance between the hub sleeve and shift fork.

Maximum clearance: 1.0 mm (0.039 in.)

If the clearance exceeds the limit, replace the shift fork or hub sleeve.

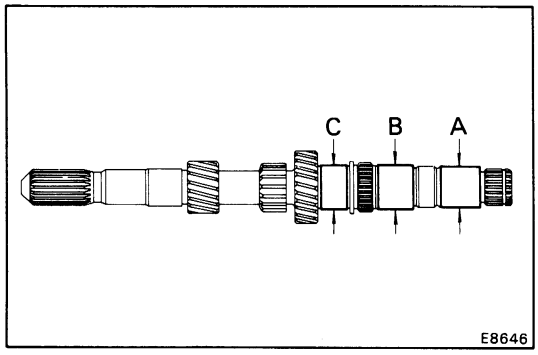

3. INSPECT INPUT SHAFT

(a) Check the input shaft for wear or damage.

(b) Using a micrometer, measure the outer diameter of the input shaft journal surface.

Minimum outer diameter:

Part A	**32.930 mm (1.2965 in.)**
B and C	**35.950 mm (1.4154 in.)**

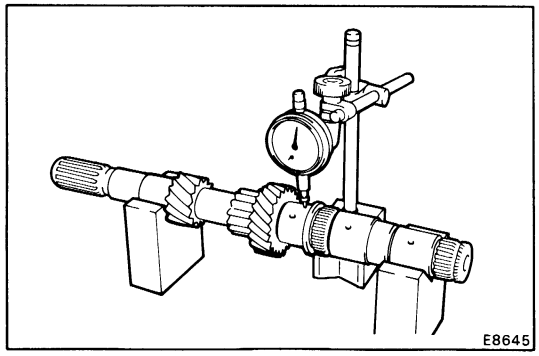

(c) Using a dial indicator, check the shaft runout.

Maximum runout: 0.05 mm (0.0020 in.)

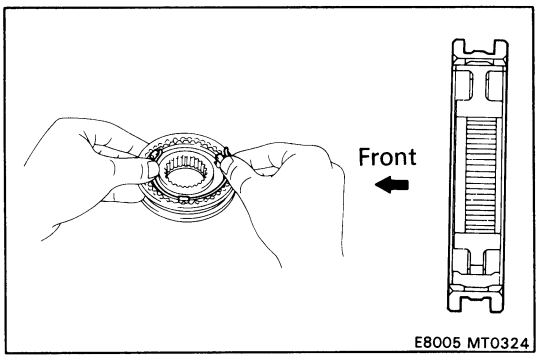

ASSEMBLY OF INPUT SHAFT ASSEMBLY

(See page MT-53)

NOTE: Coat all of the sliding and rotating surface with gear oil before assembly.

1. INSERT NO. 2 CLUTCH HUB INTO HUB SLEEVE

(a) Install the clutch hub and shifting keys to the hub sleeve.

(b) Install the shifting key springs under the shifting keys.

CAUTION: Install the shifting key springs positioned so that their end gaps are not in line.

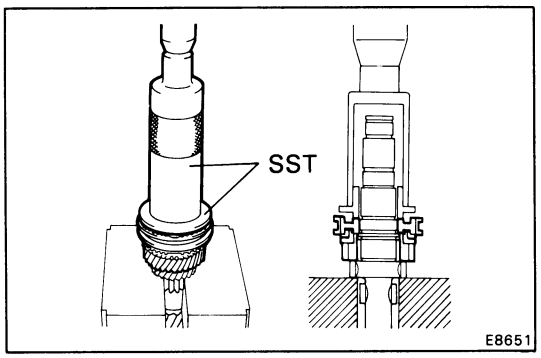

2. INSTALL NEEDLE ROLLER BEARING, THIRD GEAR, SYNCHRONIZER RING AND NO. 2 HUB SLEEVE ASSEMBLY TO INPUT SHIFT

(a) Apply MP grease to the needle roller bearings.

(b) Install the 3rd gear.

(c) Place the synchronizer ring on the gear and align the ring slots with the shifting keys.

(d) Using SST and a press, install the 3rd gear and No. 2 hub sleeve.

SST 09316-60010 (09316-00010, 09316-00050)

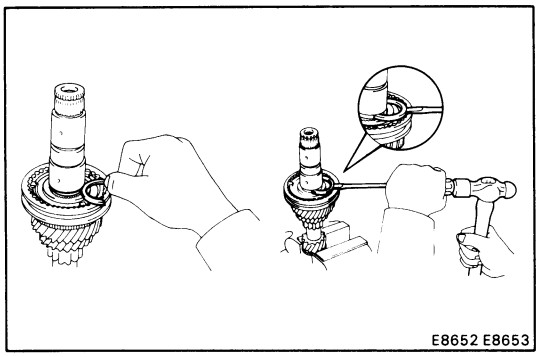

3. INSTALL SNAP RING

Select a snap ring that will allow minimum axial play and install it on the shaft.

Mark	Thickness mm (in.)	Mark	Thickness mm (in.)
H	2.30 (0.0906)	M	2.50 (0.0984)
J	2.35 (0.0925)	N	2.55 (0.1004)
K	2.40 (0.0945)	P	2.60 (0.1024)
L	2.45 (0.0965)		

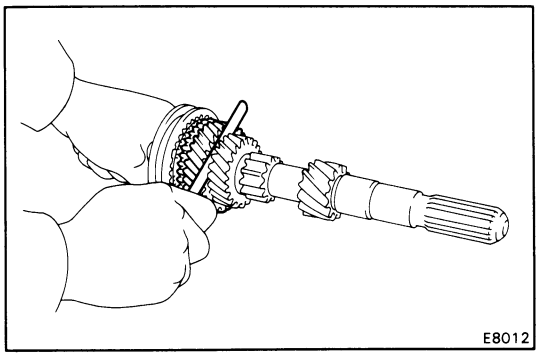

4. MEASURE THIRD GEAR THRUST CLEARANCE

Using a feeler gauge, measure the 3rd gear thrust clearance.

Standard clearance: 0.10 — 0.35 mm (0.0039 — 0.0138 in.)

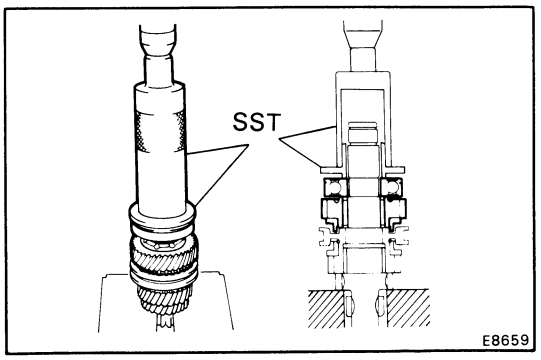

5. INSTALL SPACER, SYNCHRONIZER RING, NEEDLE ROLLER BEARINGS, FOURTH GEAR AND RADIAL BALL BEARING

(a) Install the spacer.

(b) Apply MP grease to the needle roller bearings.

(c) Place the synchronizer ring on the gear and align the ring slots with the shifting keys.

(d) Install the 4th gear.

(e) Using SST and a press, install the radial ball bearing.

SST 09316-60010 (09316-00010, 09316-00020)

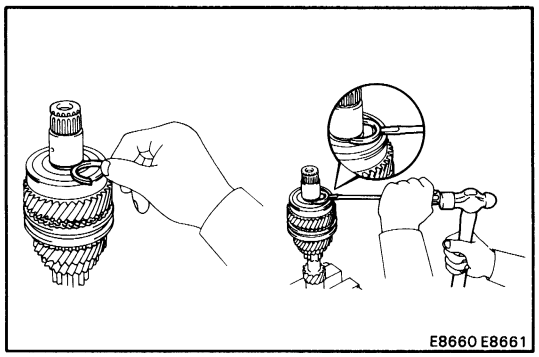

6. INSTALL SNAP RING

Select a snap ring that will allow minimum axial play and install it on the shaft.

Mark	Thickness mm (in.)	Mark	Thickness mm (in.)
1	2.35 (0.0925)	5	2.55 (0.1004)
2	2.40 (0.0945)	6	2.60 (0.1024)
3	2.45 (0.0965)	7	2.65 (0.1043)
4	2.50 (0.0984)	8	2.70 (0.1063)

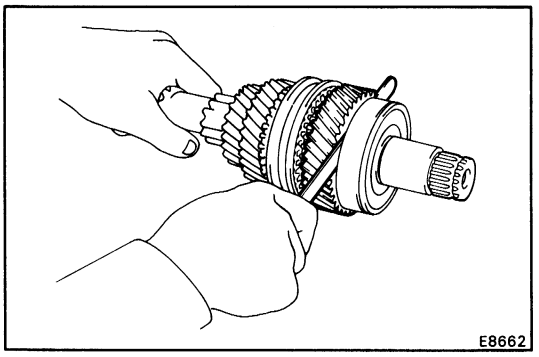

7. MEASURE FOURTH GEAR THRUST CLEARANCE

Using a feeler gauge, measure the 4th gear thrust clearance.

Standard clearance: 0.10 – 0.55 mm (0.0039 – 0.0217 in.)

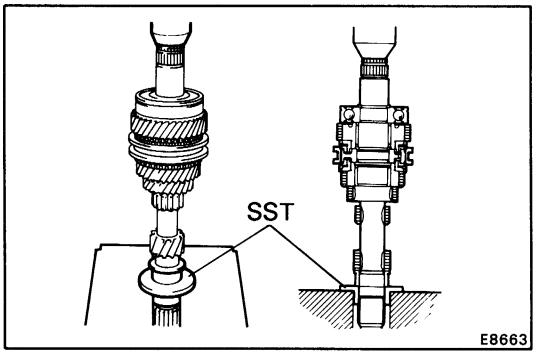

8. INSTALL INPUT SHAFT FRONT BEARING INNER RACE

Using SST and a press, install the input shaft front bearing inner race.

SST 09316-60010 (09316-00020)

OUTPUT SHAFT ASSEMBLY

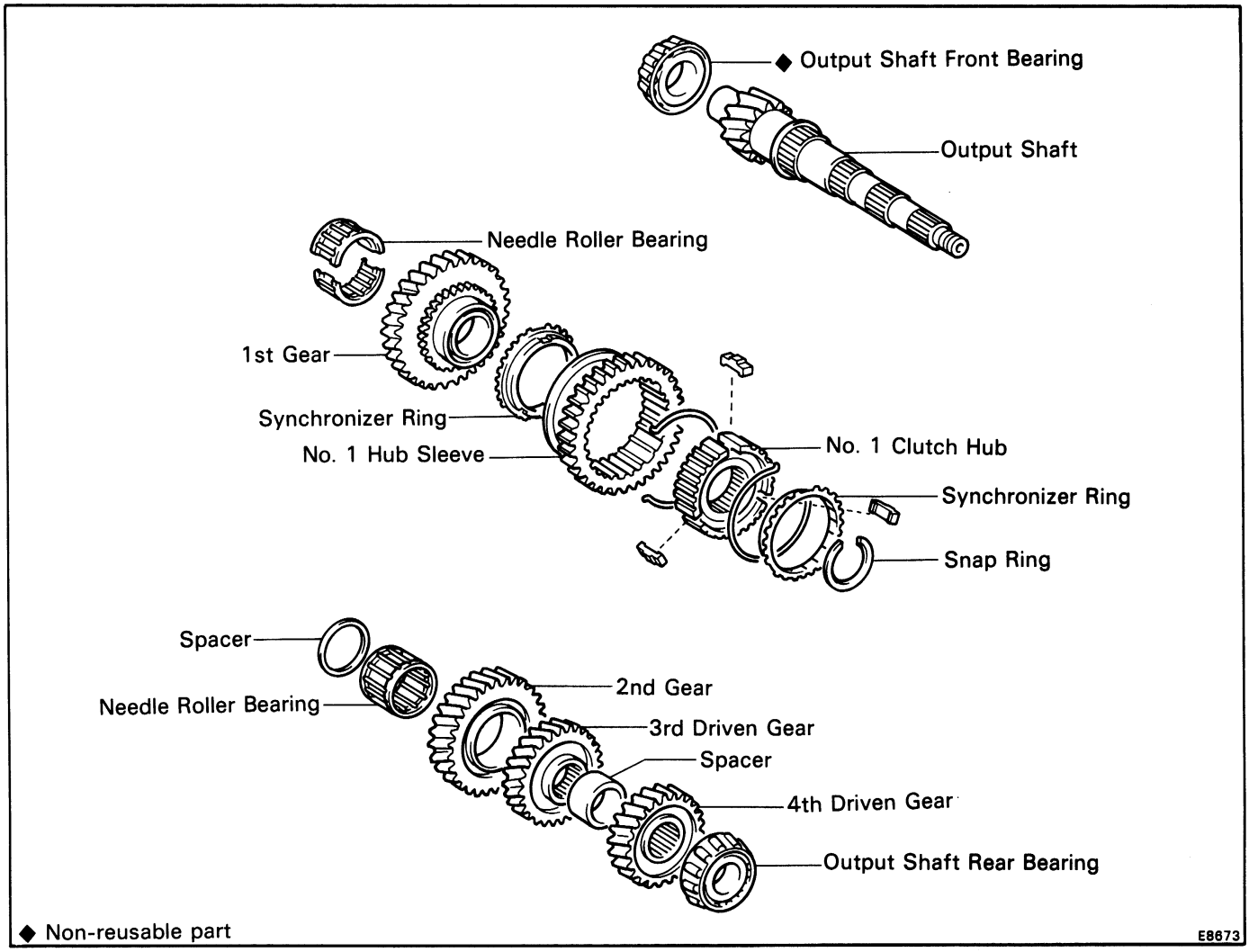

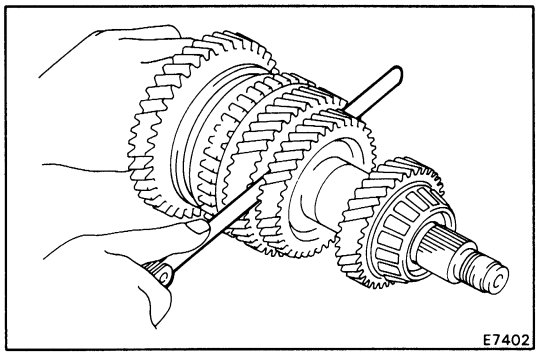

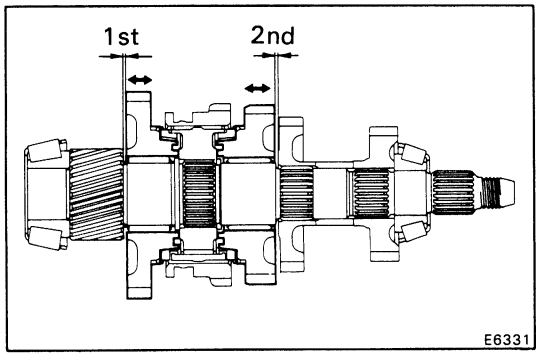

DISASSEMBLY OF OUTPUT SHAFT ASSEMBLY

1. MEASURE FIRST AND SECOND GEAR THRUST CLEARANCE

Using a feeler gauge, measure the thrust clearance.

Standard clearance:

1st gear	**0.10 – 0.35 mm (0.0039 – 0.0138 in.)**
2nd gear	**0.10 – 0.45 mm (0.0039 – 0.0177 in.)**

Maximum clearance:

1st gear	**0.40 mm (0.0157 in.)**
2nd gear	**0.50 mm (0.0197 in.)**

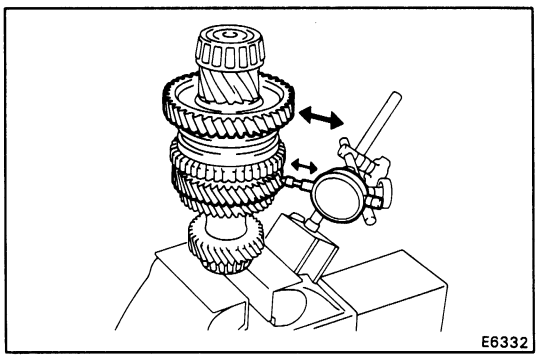

2. CHECK OIL CLEARANCE OF FIRST AND SECOND GEAR

Using dial indicator, measure the oil clearance between the gear and shaft.

Standard clearance:

1st gear	**0.009 – 0.051 mm (0.0004 – 0.0020 in.)**
2nd gear	**0.009 – 0.053 mm (0.0004 – 0.0020 in.)**

Maximum clearance:

1st and 2nd gear 0.070 mm (0.0028 in.)

If the clearance exceeds the limit, replace the gear, needle roller bearing or shaft.

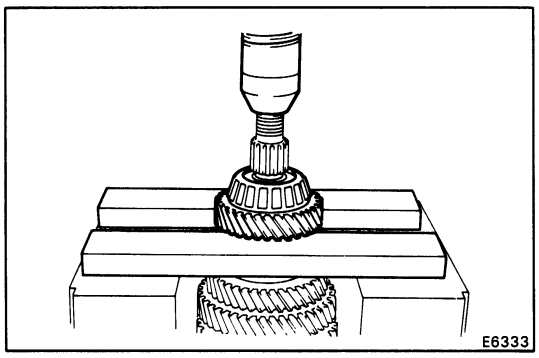

3. REMOVE OUTPUT SHAFT REAR BEARING, FOURTH DRIVEN GEAR AND SPACER

(a) Using a press, remove the bearing and 4th driven gear.

(b) Remove the spacer.

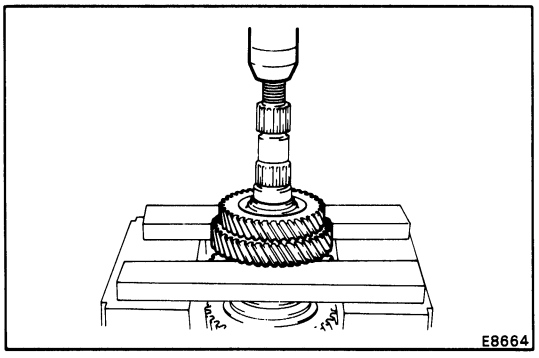

4. REMOVE THIRD DRIVEN GEAR AND SECOND GEAR

Using a press, remove the 3rd driven gear and 2nd gear.

5. REMOVE NEEDLE ROLLER BEARINGS, SPACER AND SYNCHRONIZER RING

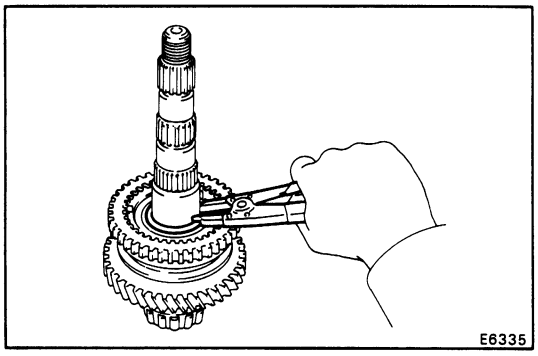

6. REMOVE SNAP RING

Using snap ring pliers, remove the snap ring.

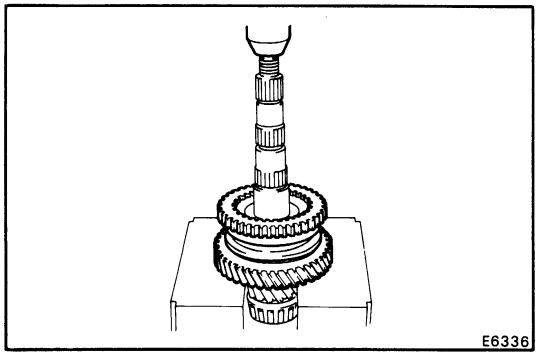

7. REMOVE NO. 1 HUB SLEEVE ASSEMBLY AND FIRST GEAR

Using a press, remove No. 1 hub sleeve and 1st gear.

8. REMOVE SYNCHRONIZER RING AND NEEDLE ROLLER BEARING

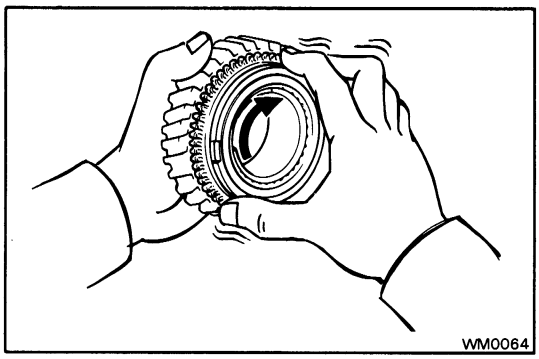

INSPECTION OF OUTPUT SHAFT COMPONENT PARTS

1. INSPECT SYNCHRONIZER RINGS

(a) Check for wear or damage.

(b) Turn the ring and push it in to check the braking action.

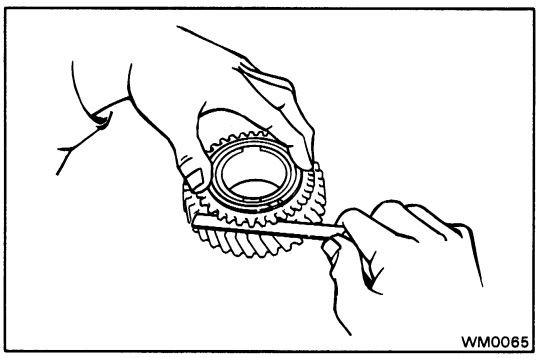

(c) Measure the clearance between the synchronizer ring back and the gear spline end.

Maximum clearance: 0.6 mm (0.024 in.)

If the clearance is less than the limit, replace the synchronizer ring.

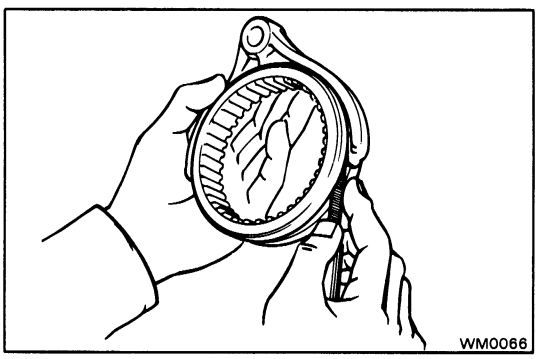

2. MEASURE CLEARANCE OF NO. 1 SHIFT FORK AND HUB SLEEVE

Using a feeler gauge, measure the clearance between the hub sleeve and shift fork.

Maximum clearance: 1.0 mm (0.039 in.)

If the clearance exceeds the limit, replace the shift fork or hub sleeve.

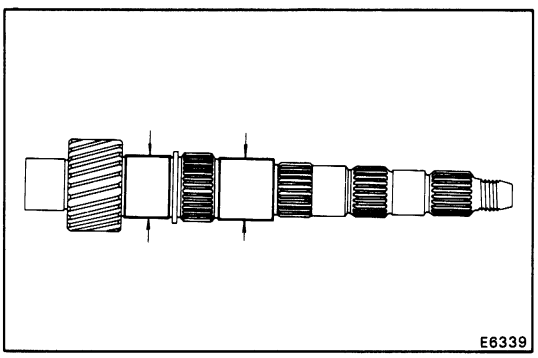

3. INSPECT OUTPUT SHAFT

(a) Check the output shaft for wear or damage.

(b) Using a micrometer, measure the outer diameter of the output shaft journal surface.

Minimum outer diameter: 38.950 mm (1.5335 in.)

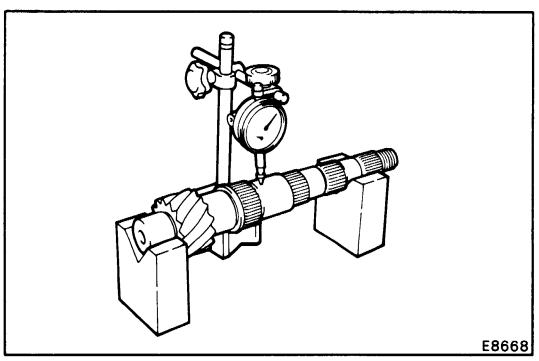

(c) Using a dial indicator, check the shaft runout.

Maximum runout: 0.06 mm (0.0024 in.)

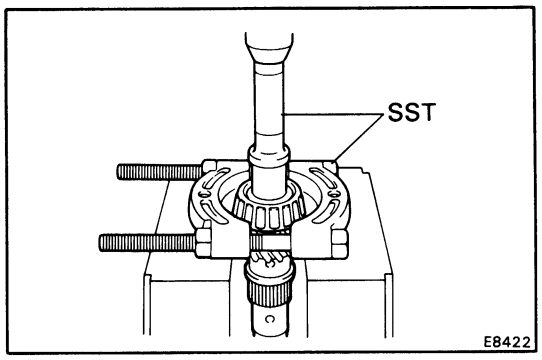

4. IF NECESSARY, REPLACE OUTPUT SHAFT FRONT BEARING

(a) Using SST and a press, remove the bearing.

SST 09307-12010, 09950-00020

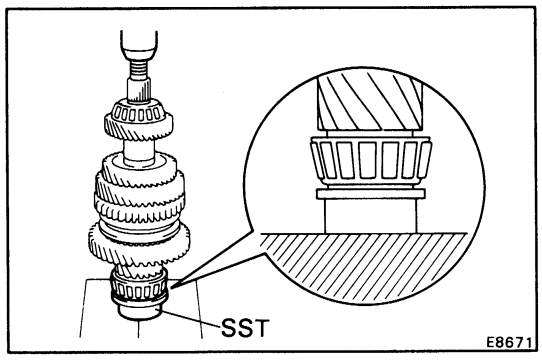

(b) Using SST and a press, install the new bearing.

SST 09316-60010 (09316-00070)

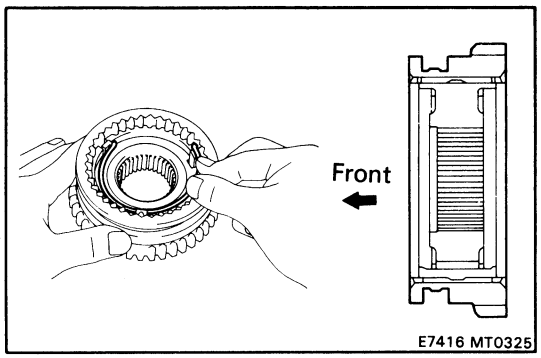

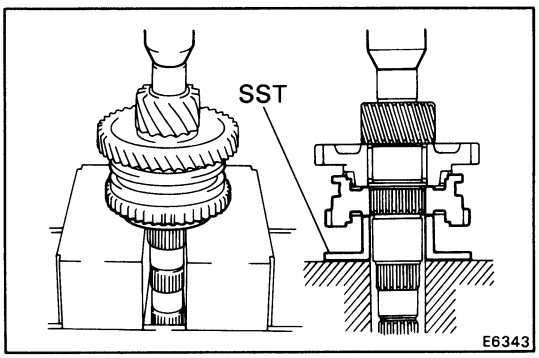

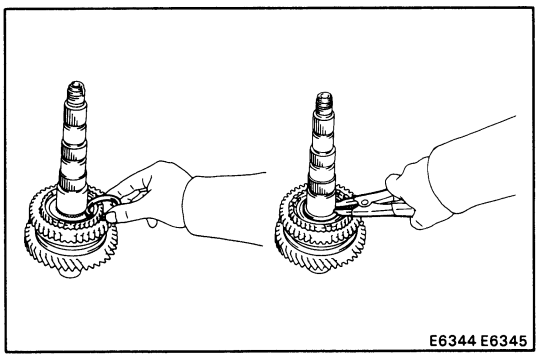

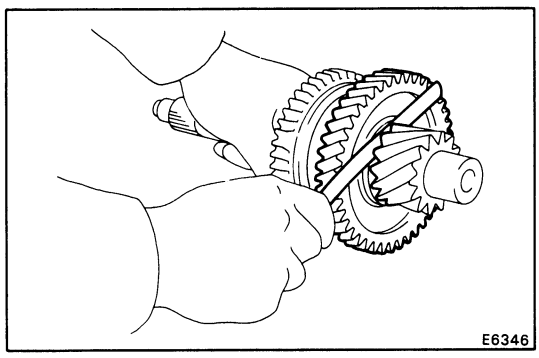

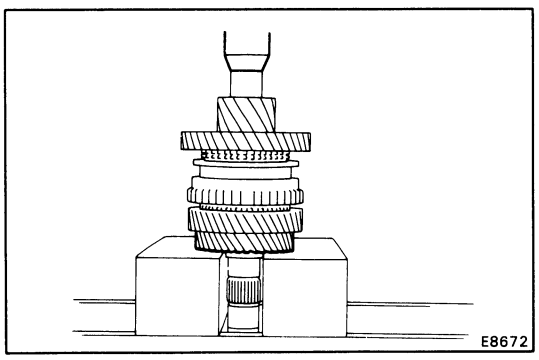

ASSEMBLY OF OUTPUT SHAFT ASSEMBLY

(See page MT-59)

NOTE: Coat all of the sliding and rotating surface with gear oil before assembly.

1. INSERT NO. 1 CLUTCH HUB INTO HUB SLEEVE

(a) Install the clutch hub and shifting keys to the hub sleeve.

(b) Install the shifting key springs under the shifting keys.

CAUTION: Install the key springs positioned so that their end gaps are not in line.

2. INSTALL NEEDLE ROLLER BEARING, FIRST GEAR, SYNCHRONIZER RING AND NO. 1 HUB SLEEVE TO OUTPUT SHAFT

(a) Apply MP grease to the needle roller bearings.

(b) Install the 1st gear.

(c) Place the synchronizer ring on the gear and align the ring slots with the shifting keys.

(d) Using SST and a press, install the 1st gear and No. 1 hub sleeve.

SST 09316-60010 (09316-00040)

3. INSTALL SNAP RING

Select a snap ring that will allow minimum axial play and install it on the shaft.

Mark	Thickness mm (in.)	Mark	Thickness mm (in.)
A	2.80 (0.1102)	E	3.00 (0.1181)
B	2.85 (0.1122)	F	3.05 (0.1201)
D	2.90 (0.1142)	G	3.10 (0.1220)
D	2.95 (0.1161)		

4. MEASURE FIRST GEAR THRUST CLEARANCE

Using a feeler gauge, measure the 1st gear thrust clearance.

Standard clearance: 0.10 — 0.35 mm (0.0039 — 0.0138 in.)

5. INSTALL SPACER, NEEDLE ROLLER BEARING, SYNCHRONIZER RING, SECOND GEAR AND THIRD DRIVEN GEAR

(a) Install the spacer.

(b) Apply MP grease to the needle roller bearing.

(c) Place the synchronizer ring on the gear and align the ring slots with the shifting keys.

(d) Install the 2nd gear.

(e) Using a press, install the 3rd driven gear.

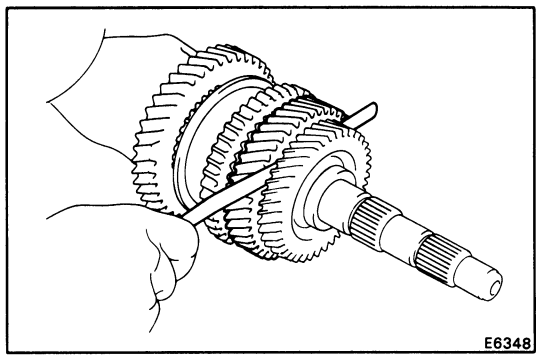

6. MEASURE SECOND GEAR THRUST CLEARANCE

Using a feeler gauge, measure the 2nd gear thrust clearance.

Standard clearance: 0.10 – 0.45 mm (0.0039 – 0.0177 in.)

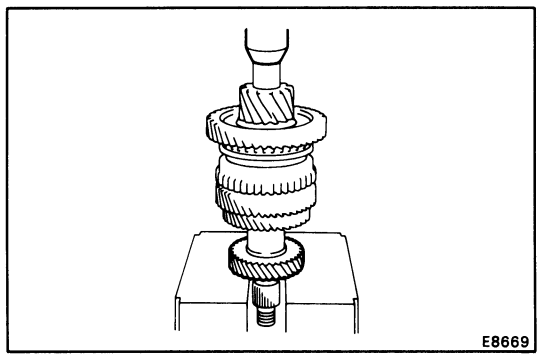

7. INSTALL SPACER AND FOURTH DRIVEN GEAR

(a) Install the spacer.

(b) Using a press, install the 4th driven gear.

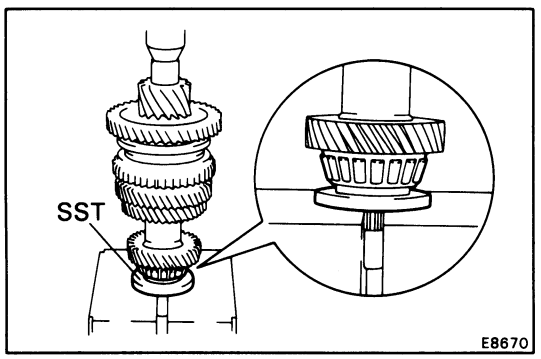

8. INSTALL OUTPUT SHAFT REAR BEARING

Using SST and a press, install the bearing.

SST 09506-30012

OIL PUMP ASSEMBLY

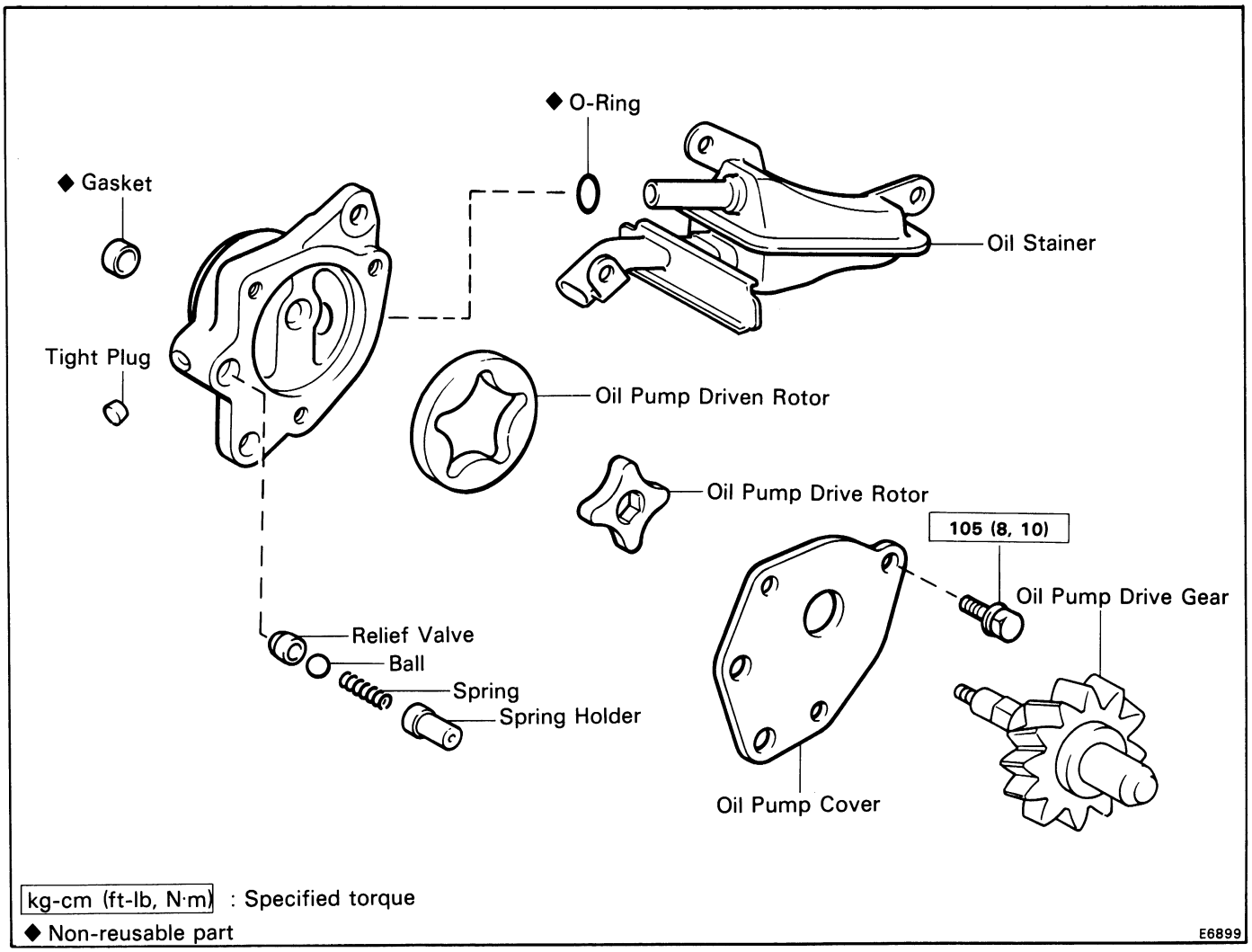

DISASSEMBLY OF OIL PUMP

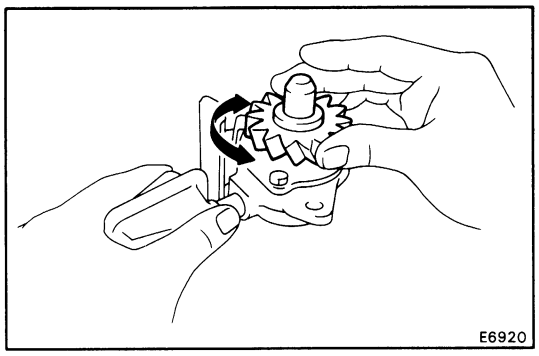

1. CHECK OPERATION OF OIL PUMP

Install the oil pump drive gear to the drive rotor, check that the drive rotor turn smoothly.

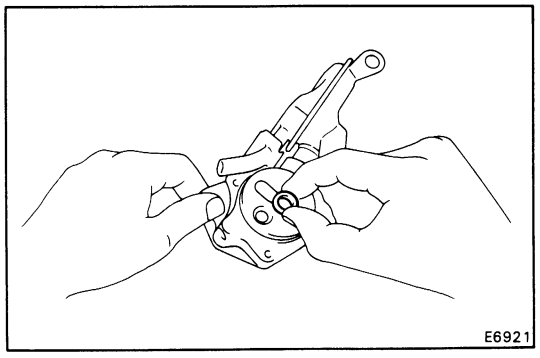

2. REMOVE GASKET TO OIL PUMP CASE

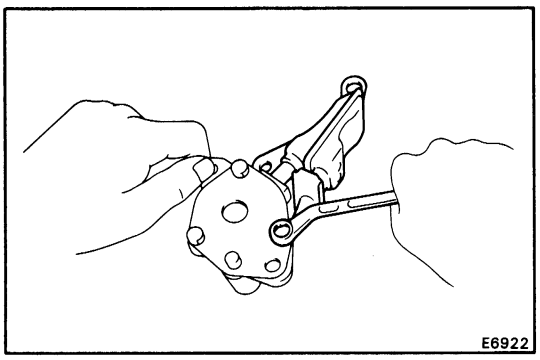

3. REMOVE BOLT AND OIL STRAINER

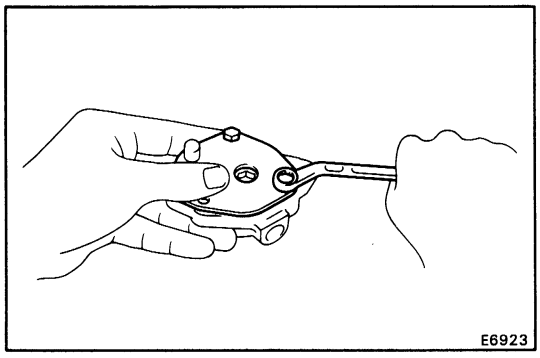

4. REMOVE OIL PUMP COVER

(a) Hold the oil pump cover, remove the two bolts and a cover.

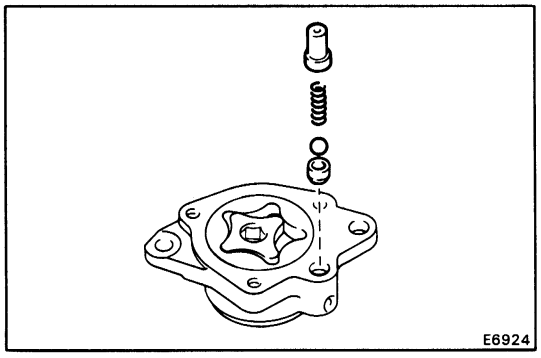

(b) Remove the spring holder, spring, ball and relief valve seat.

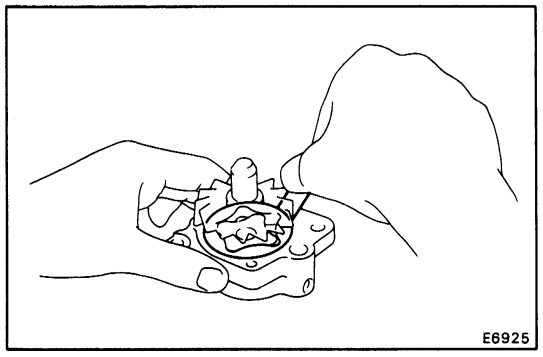

5. CHECK ROTOR BODY CLEARANCE

(a) Install the oil pump drive gear to the drive rotor.

(b) Using a feeler gauge, measure the body clearance between the drive rotor and oil pump case.

Standard clearance: 0.10 – 0.16 mm (0.004 – 0.006 in.)
Maximum clearance: 0.30 mm (0.012 in.)

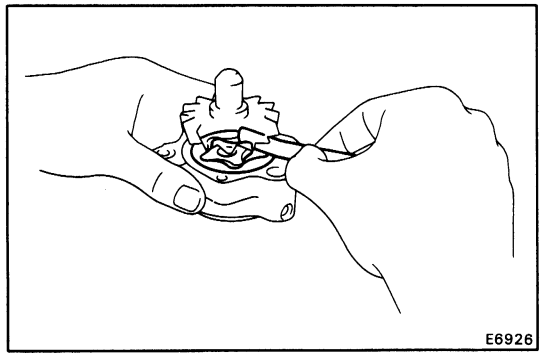

6. CHECK ROTOR TIP CLEARANCE

(a) Install the oil pump drive gear to the drive rotor.

(b) Using a feeler gauge, measure the tip clearance between the drive and driven rotors.

Standard clearance: 0.08 – 0.15 mm (0.003 – 0.006 in.)
Maximum clearance: 0.30 mm (0.012 in.)

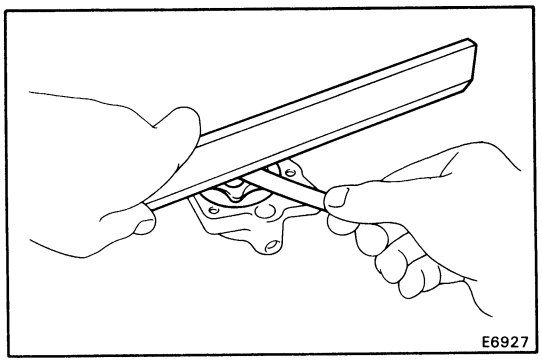

7. CHECK SIDE CLEARANCE

Using a precision straight edge and feeler gauge, measure the side clearance of both rotors.

Standard clearance: 0.03 – 0.08 mm (0.001 – 0.003 in.)
Maximum clearance: 0.15 mm (0.006 in.)

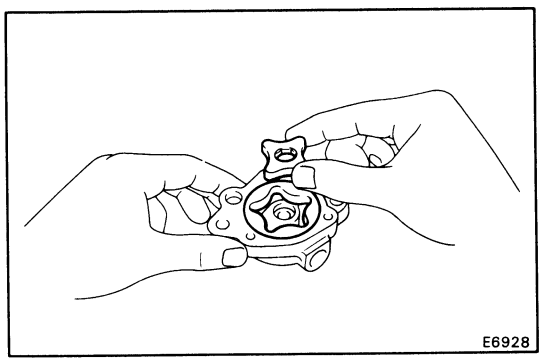

8. REMOVE OIL PUMP DRIVE ROTOR AND DRIVEN ROTOR

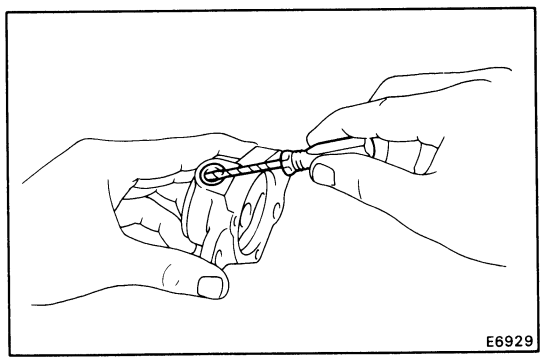

9. IF NECESSARY, REPLACE O-RING

(a) Using a screwdriver, remove the o-ring.

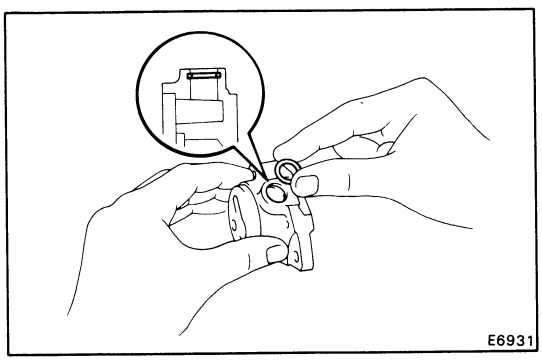

(b) Apply gear oil to the o-ring.

(c) Install the o-ring.

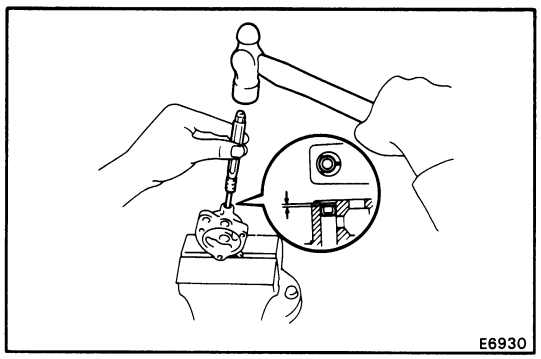
E6930

ASSEMBLY OF OIL PUMP

1. **(Only when replacing oil pump case)**
   INSTALL TIGHT PLUG

   (a) Using a pin punch and hammer, drive in a new tight plug.

   Drive in depth: 0.20 – 0.90 mm (0.008 – 0.035 in.)

   (b) Using a screwdriver and hammer, stake the three points.

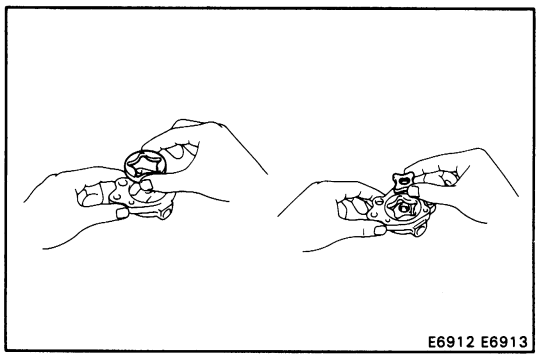
E6912 E6913

2. **INSTALL DRIVEN ROTOR AND DRIVE ROTOR**

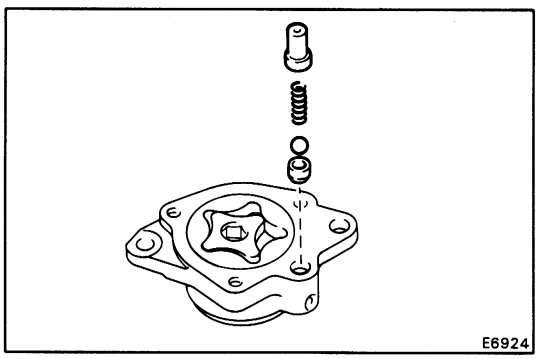
E6924

3. **INSTALL OIL PUMP COVER**

   (a) Install the relief valve, ball, spring and spring holder to the oil pump case.

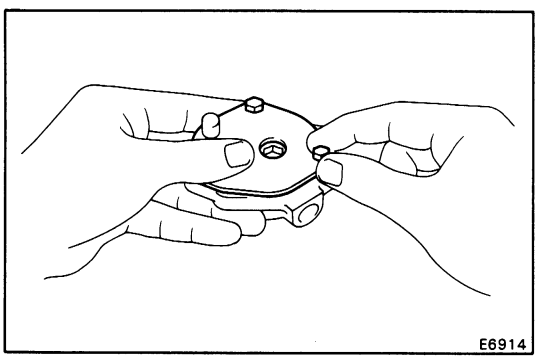
E6914

   (b) Hold the oil pump cover, temporarily install the two bolts.

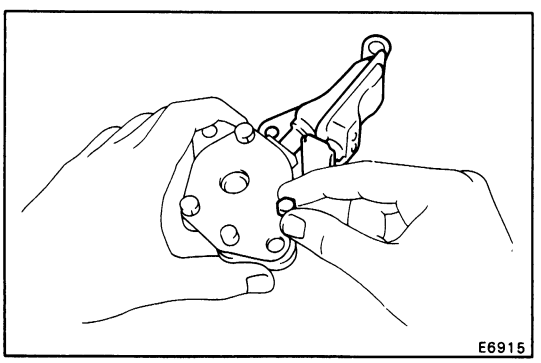
E6915

4. **INSTALL OIL STRAINER**

   Install the oil strainer to the oil pump case, temporarily install the bolt.

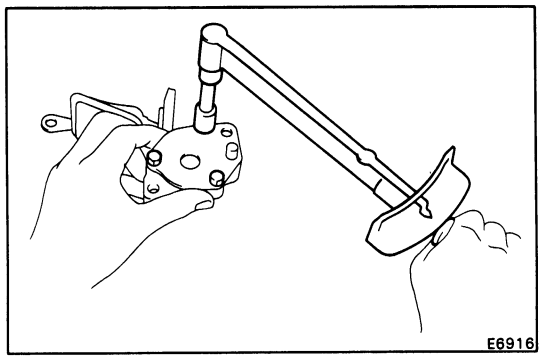

5. TORQUE OIL PUMP COVER BOLTS

Torque the three bolts evenly.

Torque: 105 kg-cm (8 ft-lb, 10 N·m)

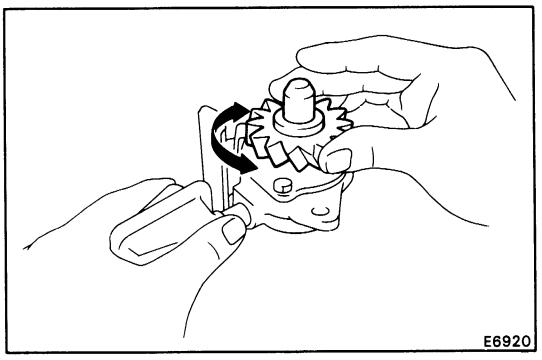

6. CHECK OPERATION OF OIL PUMP

Insert the oil pump drive gear to the drive rotor, check that the drive rotor turn smoothly.

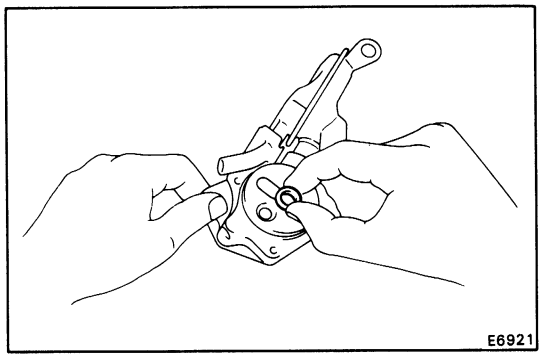

7. INSTALL GASKET

Install the new gasket to the oil pump case.

SHIFT AND SELECT LEVER ASSEMBLY

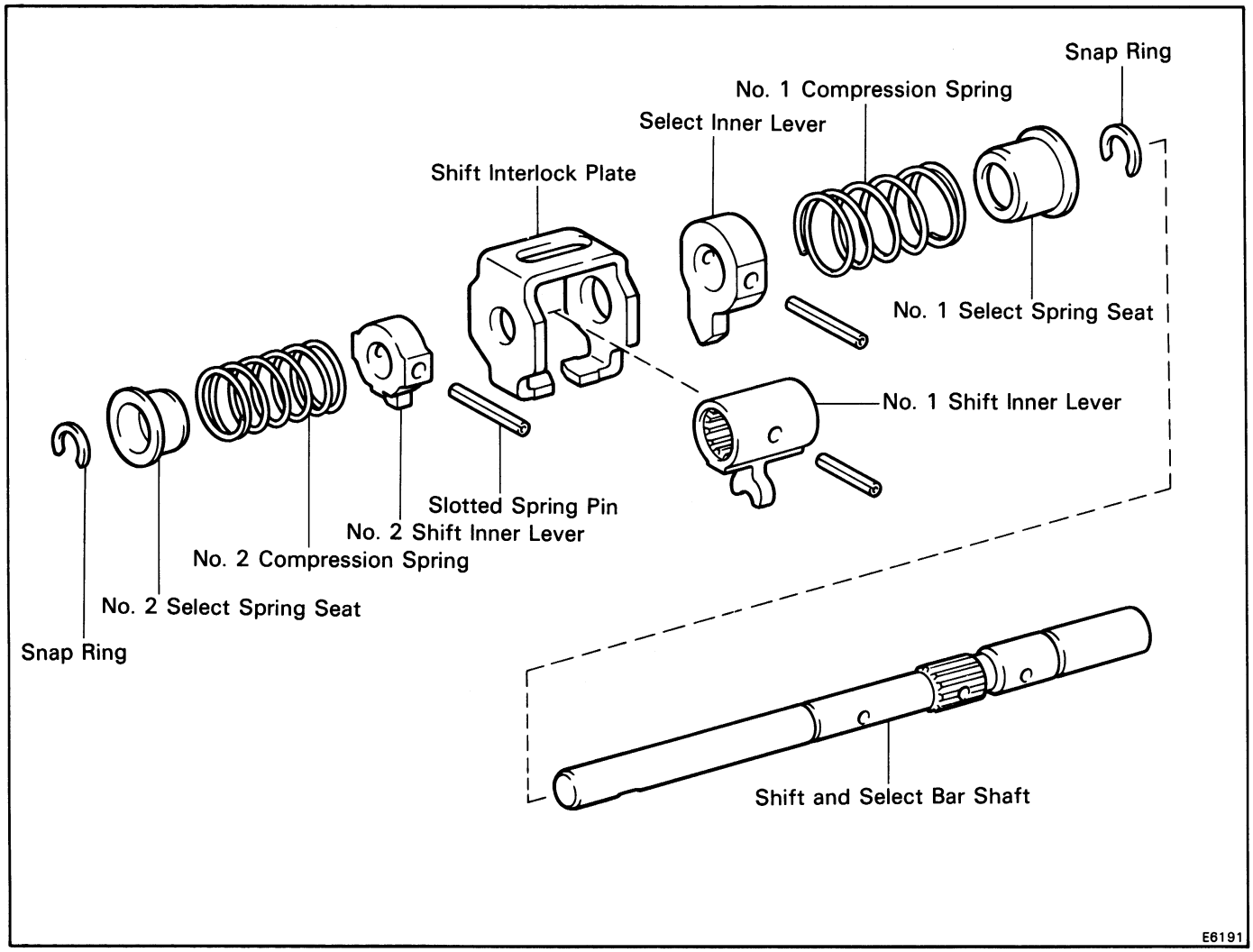

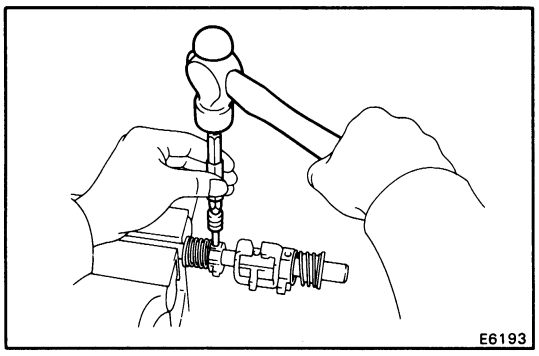

DISASSEMBLY OF SHIFT AND SELECT LEVER ASSEMBLY

1. REMOVE NO. 2 SHIFT INNER LEVER

(a) Using a pin punch and hammer, drive out the slotted spring pin.

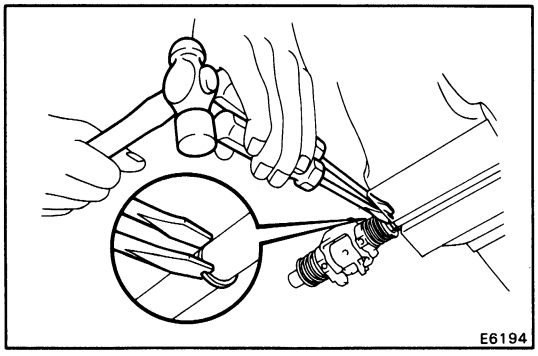

(b) Using two screwdrivers and a hammer, remove the snap ring.

(c) Remove the No. 2 select spring seat, No. 2 compression spring and No. 2 shift inner lever.

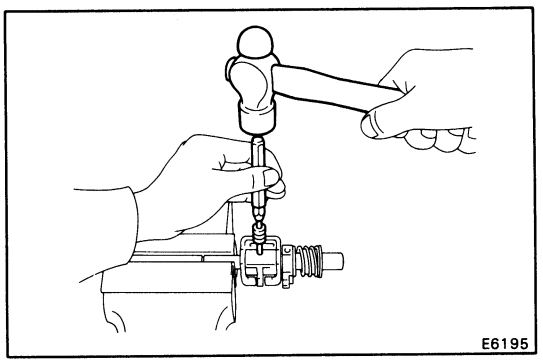

2. REMOVE SHIFT INTER PLATE AND NO. 1 SHIFT INNER LEVER

(a) Using a pin punch and hammer, drive out the slotted spring pin.

(b) Remove the shift inter plate and No. 1 shift inner lever.

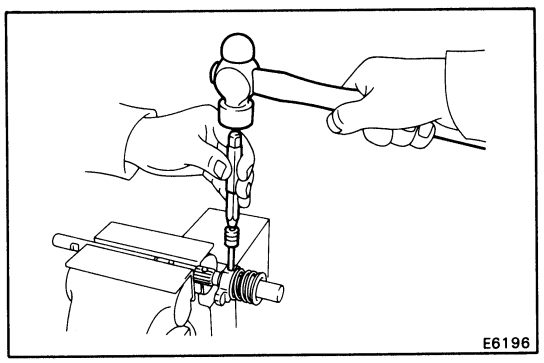

3. REMOVE SELECT INNER LEVER

(a) Using a pin punch and hammer, drive out the slotted spring pin.

(b) Remove the select inner lever, No. 1 compression spring and No. 1 select spring seat.

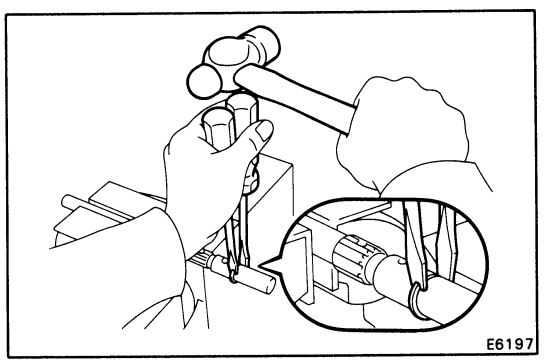

4. REMOVE SNAP RING

Using two screwdrivers and a hammer, remove the snap ring.

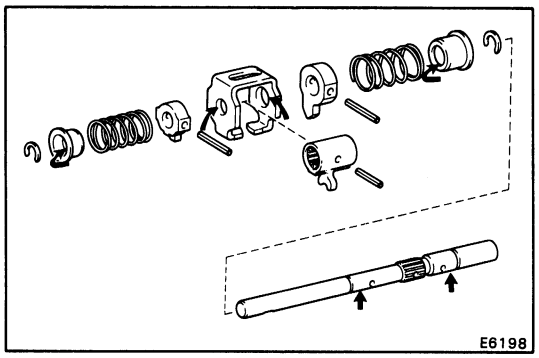

ASSEMBLY OF SHIFT AND SELECT LEVER ASSEMBLY

1. COAT SHAFT WITH MP GREASE, AS SHOWN

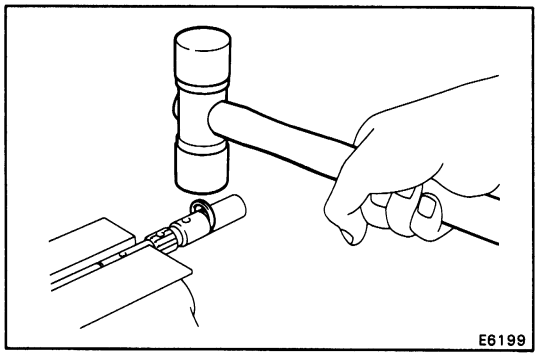

2. INSTALL SNAP RING

Using a plastic hammer, install the snap ring.

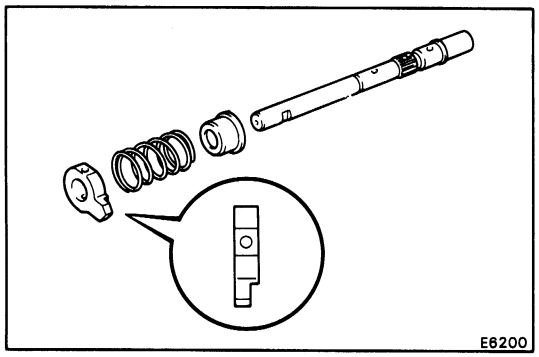

3. INSTALL SELECT INNER LEVER

(a) Install the No. 1 select spring seat, No. 1 compression spring and select inner lever.

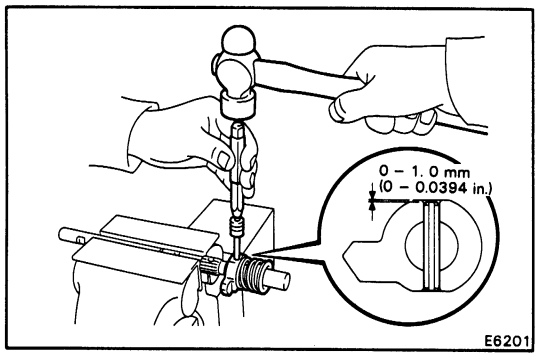

(b) Using a pin punch and hammer, drive in the slotted spring pin.

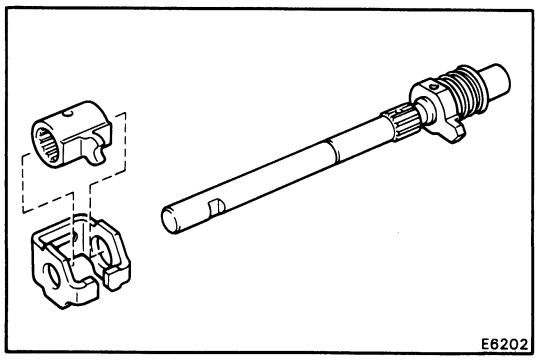

4. INSTALL SHIFT INTERLOCK PLATE AND NO. 1 SHIFT INNER LEVER

(a) Install the shift interlock plate and No. 1 shift inner lever.

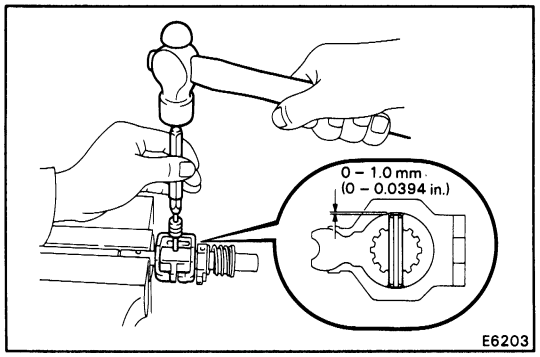

(b) Using a pin punch and hammer, drive in the slotted spring pin.

(c) Check that the shift interlock plate turn smoothly.

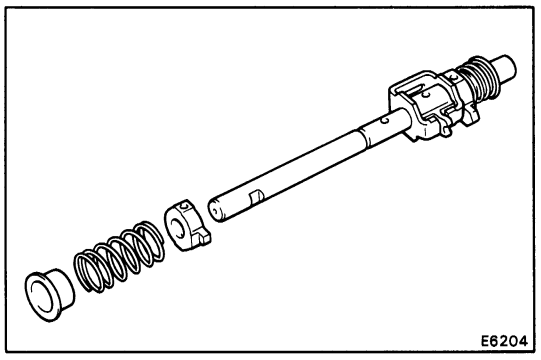

5. INSTALL NO. 2 SHIFT INNER LEVER

(a) Install the No. 2 shift inner lever, No. 2 compression spring and No. 2 select spring seat.

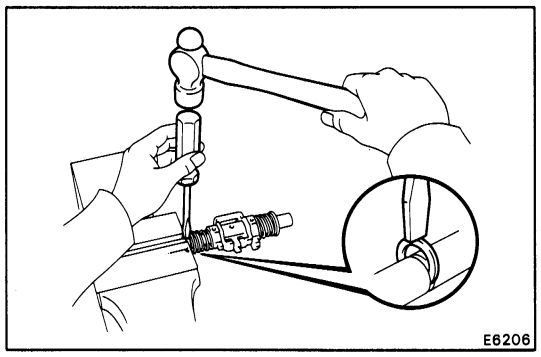

(b) Using a screwdriver and hammer, install the snap ring.

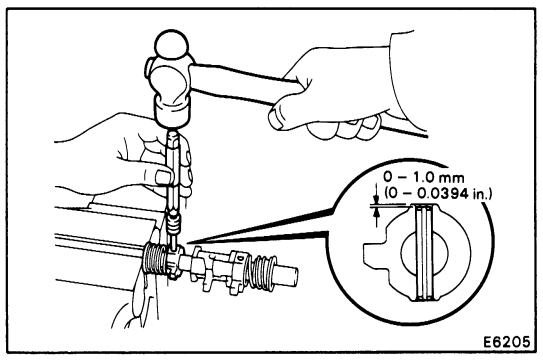

(c) Using a pin punch and hammer, drive in the slotted spring pin.

DIFFERENTIAL

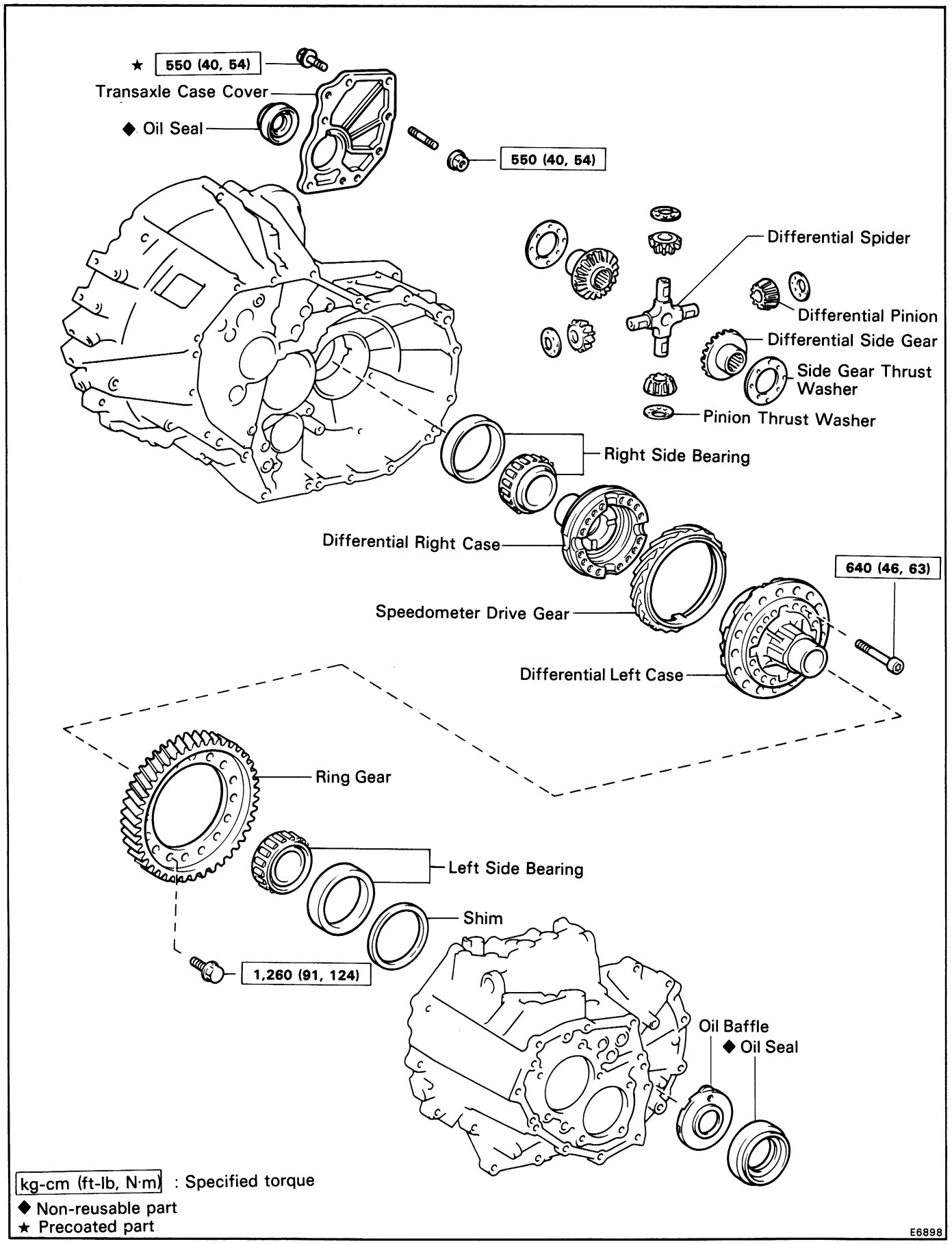

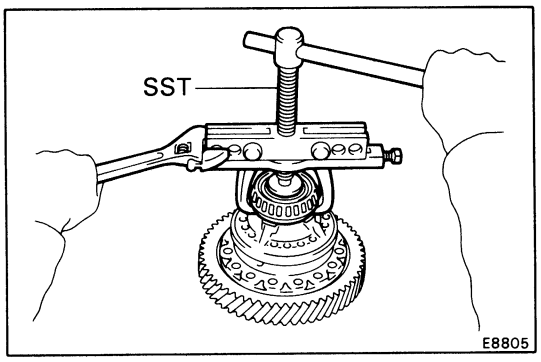

DISASSEMBLY OF DIFFERENTIAL CASE

1. REMOVE SIDE BEARING

Using SST, remove the two side bearings.

SST 09950-20017

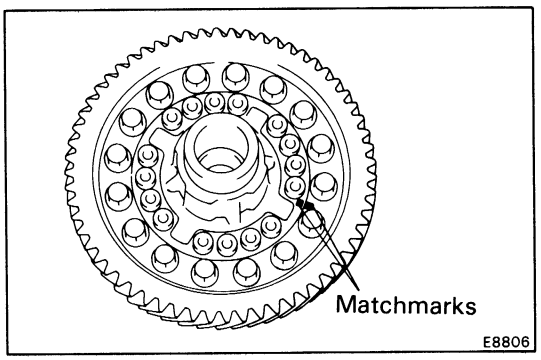

2. REMOVE RING GEAR

(a) Place the matchmarks on both the differential case and ring gear.

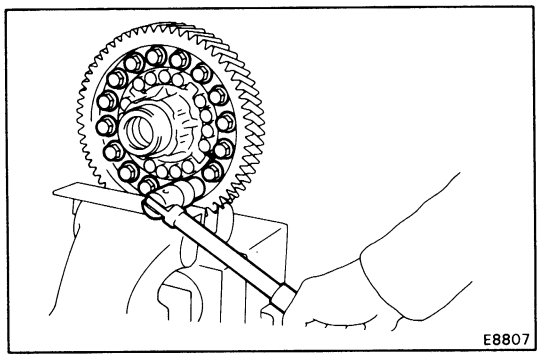

(b) Remove the sixteen bolts.

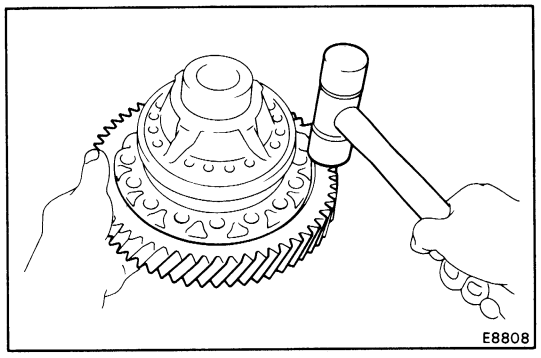

(c) Using a plastic hammer, tap out the ring gear.

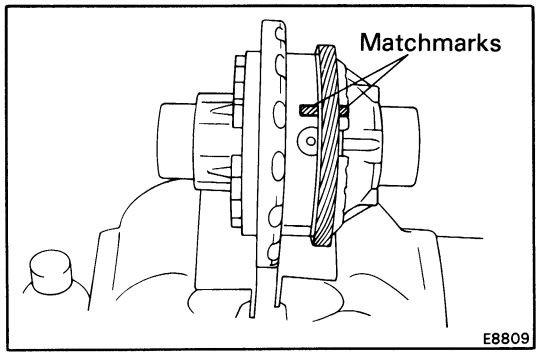

3. DISASSEMBLE OF DIFFERENTIAL CASE

(a) Place the matchmarks on the differential right and left case.

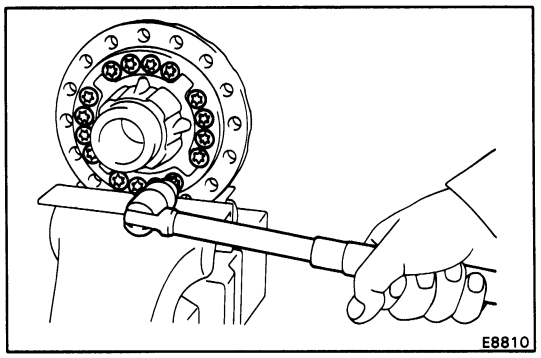

(b) Using a torx wrench, remove the sixteen torx screws.

Torx wrench T50 09042-00040

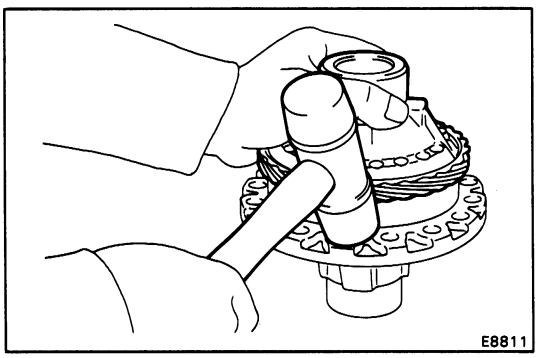

(c) Using a plastic hammer, tap out the differential left case.

(d) Remove the speedometer drive gear from the differential right case.

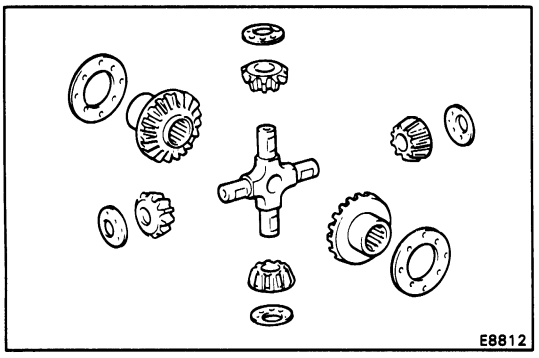

(e) Remove the two differential side gears, two side thrust washers, differential spider, four differential pinions and four pinion washers from the differential left case.

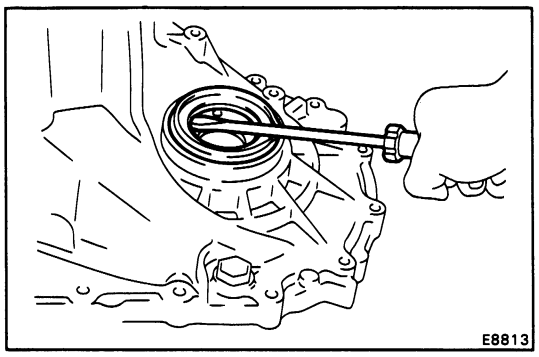

4. (Transmission Case Side)
IF NECESSARY, REPLACE OIL SEAL AND TAPER ROLLER BEARING OUTER RACE

(a) Using screwdriver, remove the oil seal.

(b) Remove the transmission oil baffle.

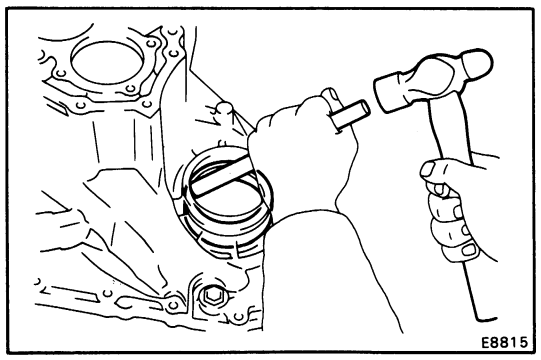

(c) Using a brass bar and hammer, drive out the bearing outer race lightly and evenly.

(d) Remove the shim.

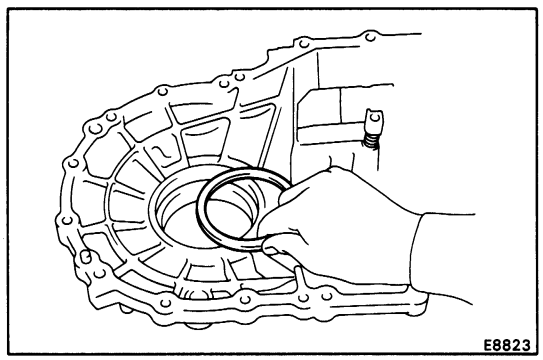

(e) Install the shim.
(See page MT-74)

NOTE: First select and install a shim of lesser thickness than before.

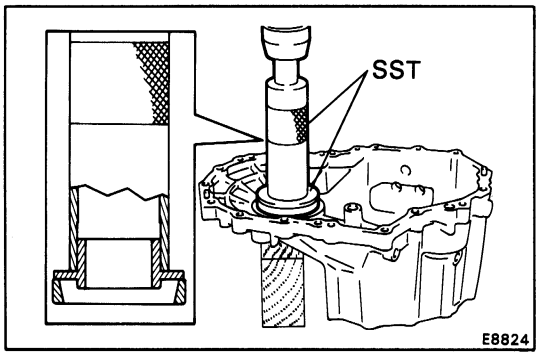

(f) Using SST and a press, install the taper roller bearing outer race.

SST 09316-60010 (09316-00010, 09316-00040)

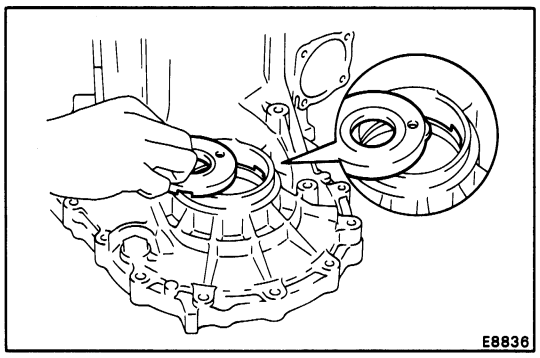

(g) Install the transmission oil baffle.

NOTE: Install the transmission oil baffle projection into the case side cutout.

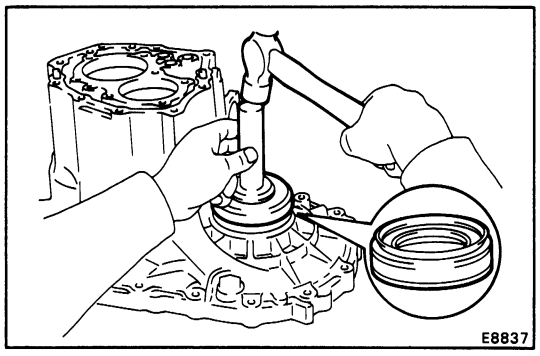

(h) Using SST and a hammer, drive in a new oil seal.

SST 09223-15010

(i) Coat the lip of oil seal with MP grease.

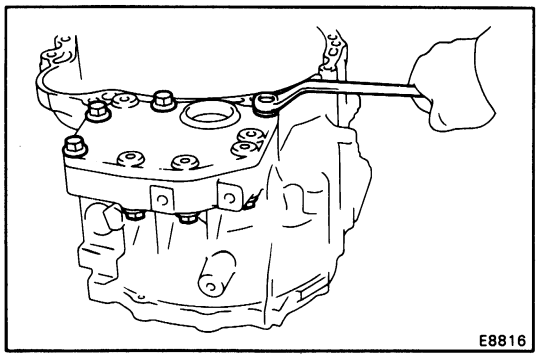

5. (Transaxle Case Side)
IF NECESSARY, REPLACE OIL SEAL AND TAPER ROLLER BEARING OUTER RACE

(a) Remove the four bolts and three nuts.

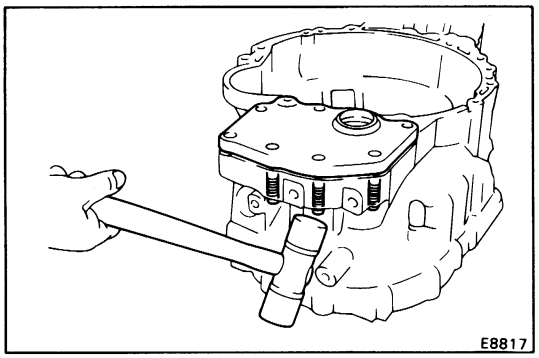

(b) Using a plastic hammer, tap the stud bolt and remove the transaxle case cover.

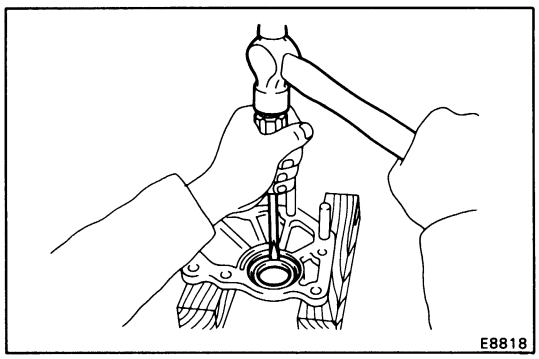

(c) Using a screwdriver and hammer, drive out the oil seal.

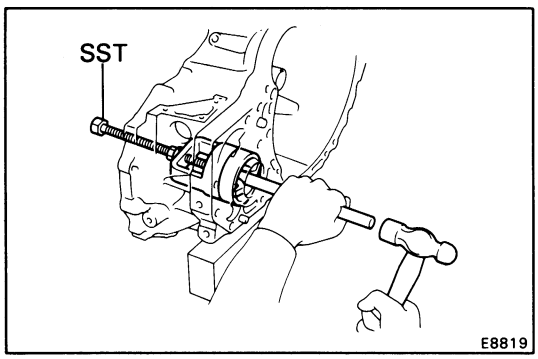

(d) Using SST, brass bar and hammer, remove the taper roller bearing outer race.

SST 09612-65014 (09612-01020)

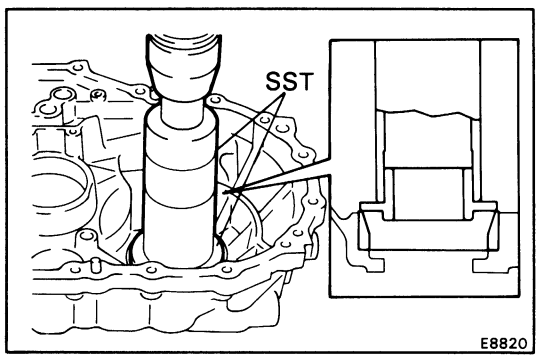

(e) Using SST and a hammer, install the taper roller bearing.

SST 09316-60010 (09316-00010, 09316-00040)

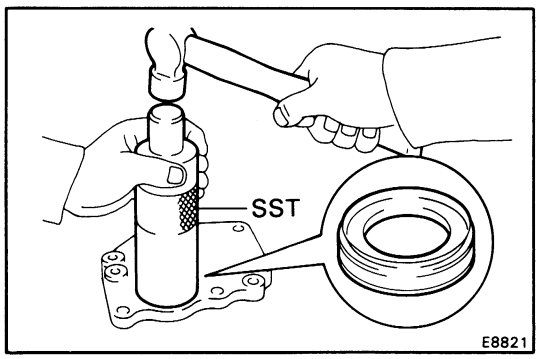

(f) Using SST and a hammer, drive in a new oil seal.

SST 09316-60010 (09316-00010)

(g) Coat the lip of oil seal with MP grease.

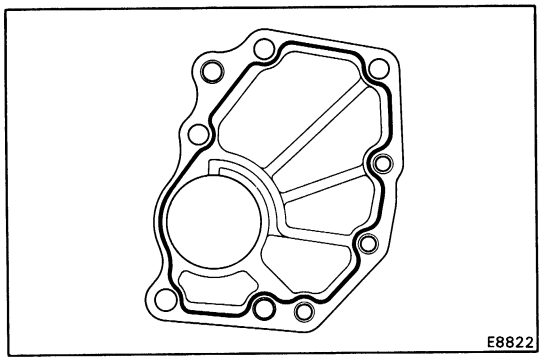

(h) Remove any packing material and be careful not to drop oil on the contacting surfaces of the transaxle case or case cover.

(i) Apply seal packing to the transaxle case cover as shown in the figure.

Seal packing: Part No. 08826-00090, THREE BOND 1281 or equivalent

NOTE: Install the transaxle case cover as soon as the seal packing is applied.

(j) Apply liquid sealant to the bolt threads.

Sealant: Part No. 08833-00080, THREE BOND 1344, LOCTITE 242 or equivalent

(k) Install and torque the four bolts and three nuts.

Torque: 550 kg-cm (40 ft-lb, 54 N·m)

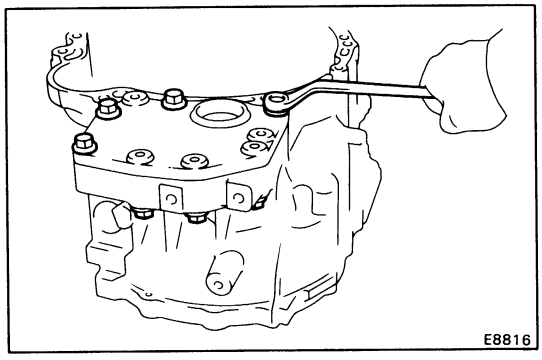

6. ASSEMBLE OF DIFFERENTIAL CASE

NOTE: Coat all of the sliding and rotating surface with gear oil before assembly.

(a) Install the thrust washer to the side gear.

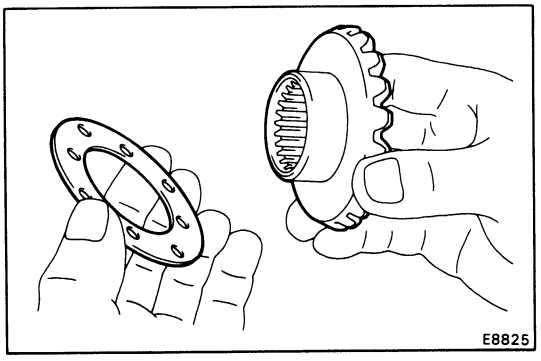

(b) Install the four pinions and thrust washers to the spider.

(c) Install the side gear and spider with four pinions to the differential left case.

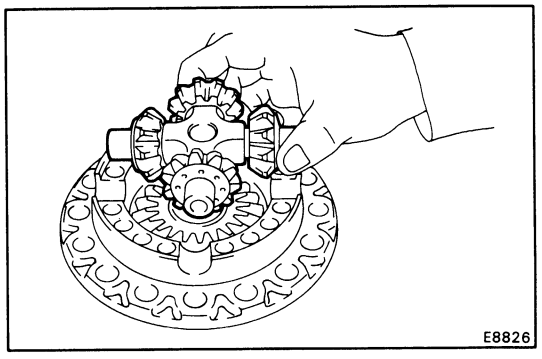

(d) Using a dial indicator, measure the backlash of one pinion gear while holding the No. 2 differential case.

Standard backlash: 0.05 – 0.20 mm (0.0020 – 0.0079 in.)

NOTE: Push the pinion gear of the left side of the differential case.

(e) Install the side gear and spider with four pinions to the right side of the differential case.
And check the side gear backlash.

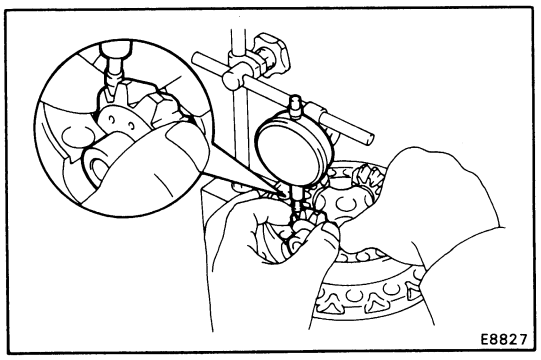

(f) Referring to the table below, select the thrust washer which will ensure that the backlash is within specification. Try to select a washer of the same size.

Mark	Thickness mm (in.)	Mark	Thickness mm (in.)
—	0.80 (0.0315)	—	1.20 (0.0472)
—	0.90 (0.0354)	—	1.30 (0.0512)
—	1.00 (0.0394)	—	1.40 (0.0551)
—	1.10 (0.0433)		

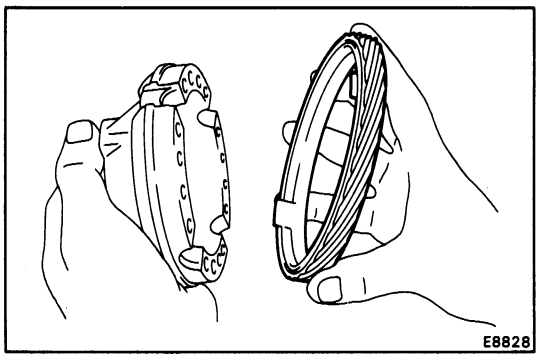

(g) Install the speedometer driven gear.

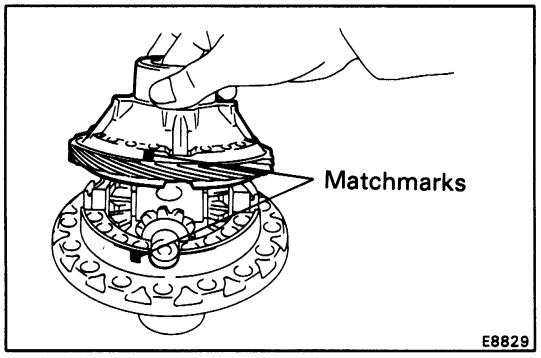

(h) Align the matchmarks on the differential cases.

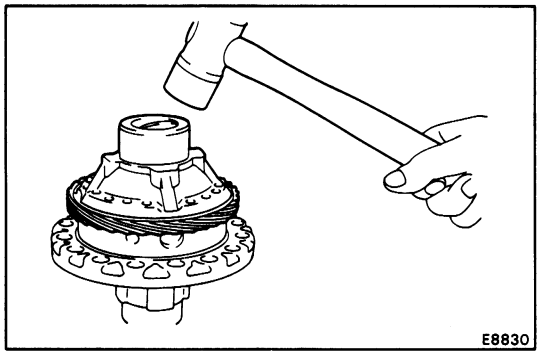

(i) Using plastic hammer, carefully tap the differential case.

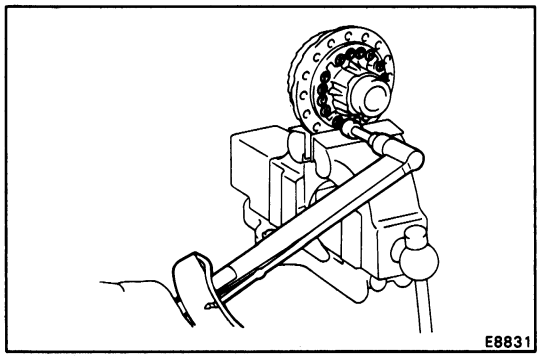

(j) Using a torx wrench, install and torque the sixteen torx screws.

Torx wrench T50 09042-00040

Torque: 640 kg-cm (46 ft-lb, 63 N·m)

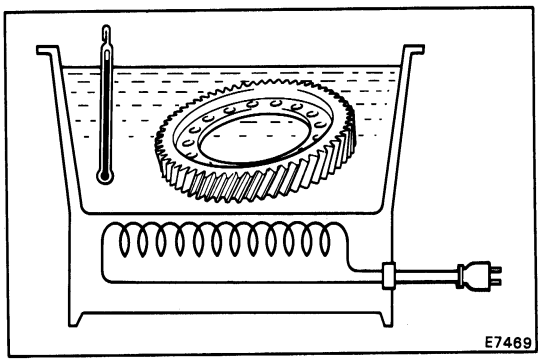

7. INSTALL RING GEAR

(a) Clean the contact surface of the differential case.

(b) Heat the ring gear to about 100°C (212°F) in an oil bath.

CAUTION: Do not heat the ring gear above 110°C (230°F)

(c) Clean the contact surface of the ring gear with cleaning solvent.

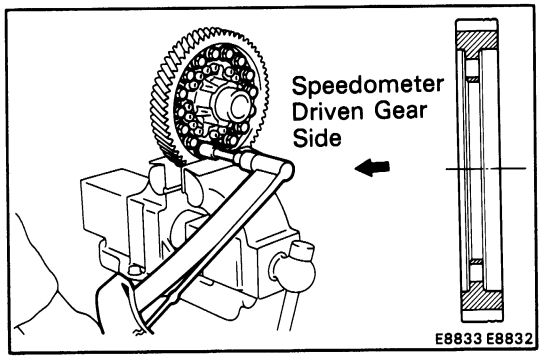

(d) Quickly install the ring gear on the differential case. Install the sixteen bolts.

NOTE: Align the matchmarks on the differential left case and contact the ring gear.

(e) Tighten the set bolts uniformly and a little at a time. Torque the bolts.

Torque: 1,260 kg-cm (91 ft-lb, 124 N·m)

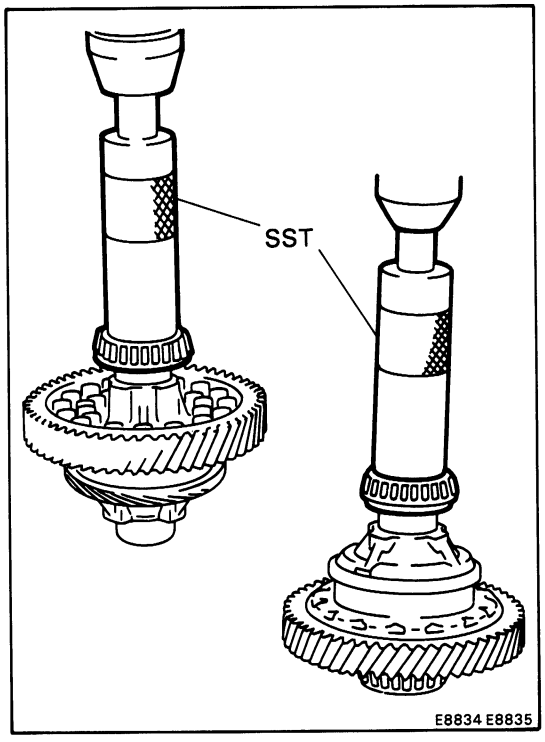

8. INSTALL SIDE BEARING

Using SST and a press, install the side bearings onto the differential case.

SST 09316-60010 (09316-00010)

NOTE: Press the bearing on the ring gear side first.

9. ADJUST OUTPUT SHAFT ASSEMBLY PRELOAD
(See pages MT-84, 85)

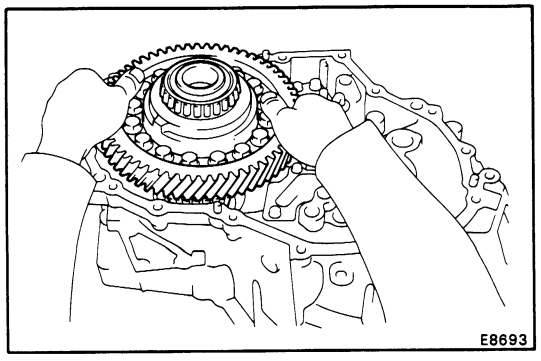

10. INSTALL DIFFERENTIAL CASE ASSEMBLY

Install the differential case assembly to the transaxle case.

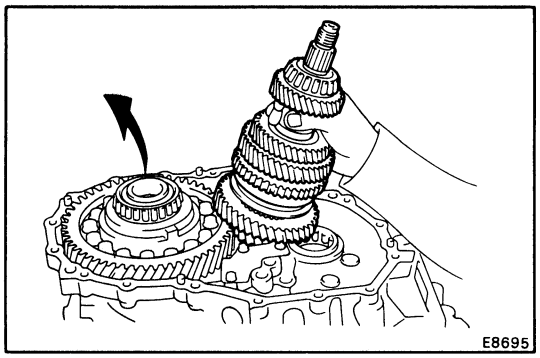

11. INSTALL OUTPUT SHAFT ASSEMBLY

Lift up the differential case, install the input shaft assembly.

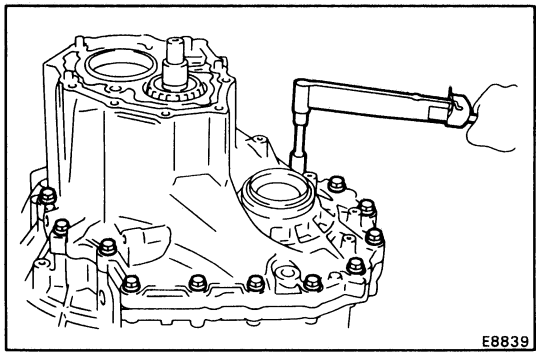

12. INSTALL TRANSMISSION CASE

(a) Install the transmission case.

NOTE: If necessary, tap on the case with a plastic hammer.

(b) Install and torque the seventeen bolts.

Torque: 300 kg-cm (22 ft-lb, 29 N·m)

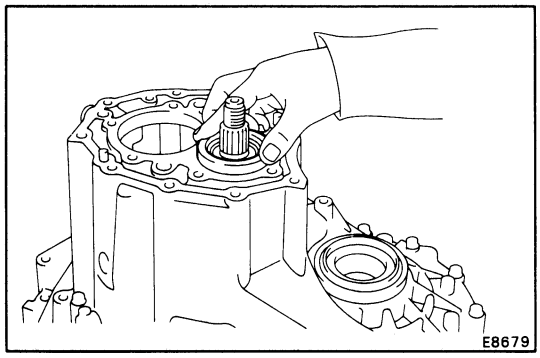

13. INSTALL OUTPUT SHAFT REAR TAPER ROLLER BEARING OUTER RACE

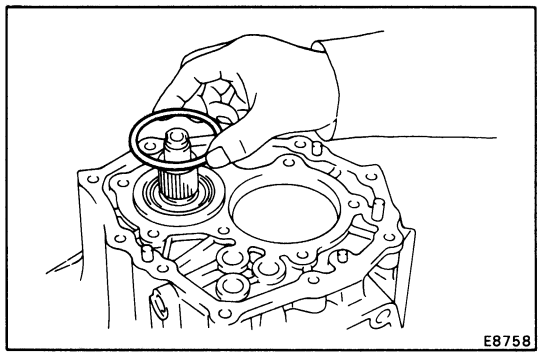

14. INSTALL SHIM
(See pages MT-84, 85)

NOTE: Install the previously selected shim.

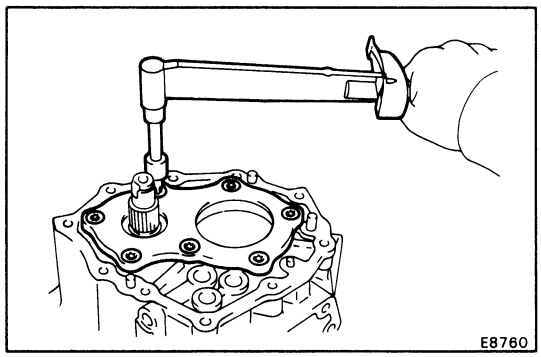

15. INSTALL REAR BEARING RETAINER

Using a torx wrench, install and torque the seven torx screws.

Torx wrench T45 09042-00050

Torque: 430 kg-cm (31 ft-lb, 42 N·m)

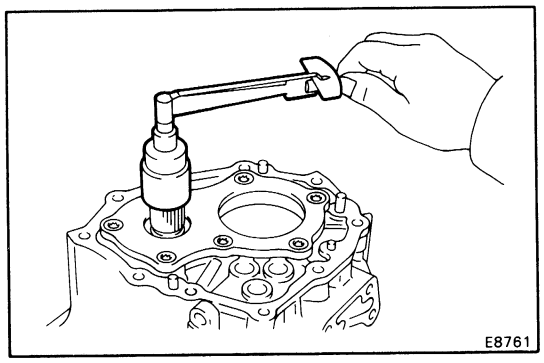

16. ADJUST DIFFERENTIAL CASE PRELOAD

(a) Install the new lock nut to the output shaft.

(b) Turn the output shaft right and left two or three times to allow the bearings to settle.

(c) Using a torque wrench, measure the preload.

Preload (at starting):
New bearing
Add output shaft preload
1.9 – 3.7 kg-cm (1.6 – 3.2 in.-lb, 0.2 – 0.4 N·m)
Reused bearing
Add output shaft preload
1.2 – 2.3 kg-cm (1.0 – 2.0 in.-lb, 0.1 – 0.2 N·m)

If the preload is not within specification, select the thrust washers.

NOTE: The total preload will change about 1 – 2 kg-cm (0.9 – 1.7 in.-lb, 0.1 – 0.2 N·m) with each shim thickness.

Mark	Thickness mm (in.)	Mark	Thickness mm (in.)
0	2.00 (0.0787)	9	2.45 (0.0965)
1	2.05 (0.0807)	A	2.50 (0.0984)
2	2.10 (0.0827)	B	2.55 (0.1004)
3	2.15 (0.0846)	C	2.60 (0.1024)
4	2.20 (0.0866)	D	2.65 (0.1043)
5	2.25 (0.0886)	E	2.70 (0.1063)
6	2.30 (0.0906)	F	2.75 (0.1083)
7	2.35 (0.0925)	G	2.80 (0.1102)
8	2.40 (0.0945)	H	2.85 (0.1122)

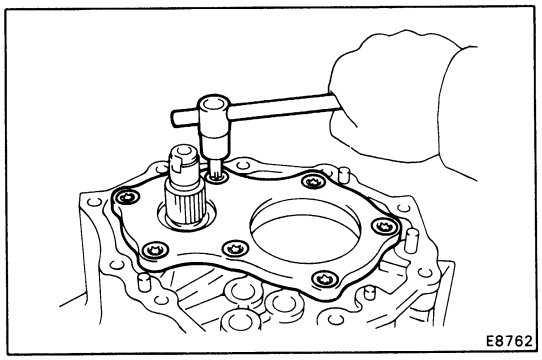

17. REMOVE REAR BEARING RETAINER

Using torx wrench, remove the seven torx screws and rear bearing retainer.

Torx wrench T45 09042-00050

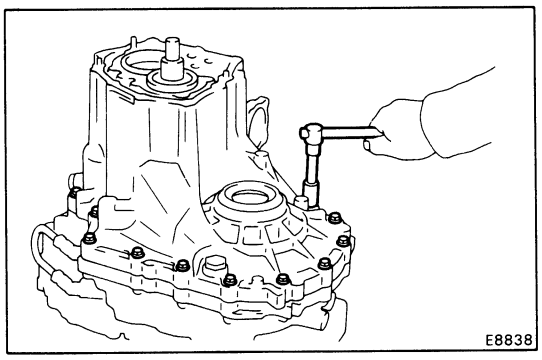

18. REMOVE SHIM

19. REMOVE TRANSMISSION CASE

Remove the seventeen bolts and tap off the case with a plastic hammer.

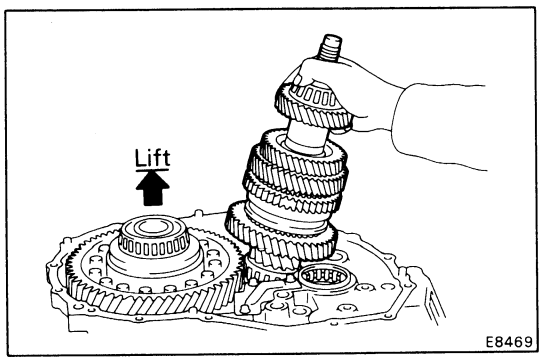

20. REMOVE OUTPUT SHAFT ASSEMBLY

21. REMOVE DIFFERENTIAL CASE ASSEMBLY

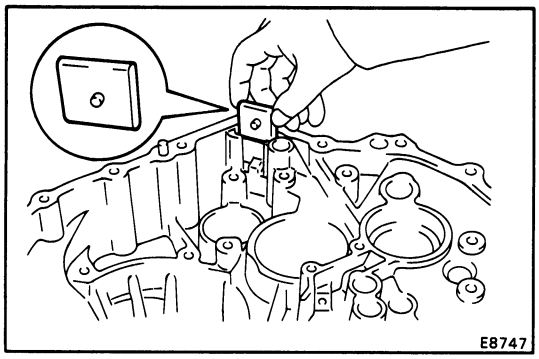

INSTALLATION OF COMPONENT PARTS

(See pages MT-7 to 9)

NOTE: Coat all of the sliding and rotating surface with gear oil before assembly.

1. INSTALL MAGNET TO TRANSAXLE CASE

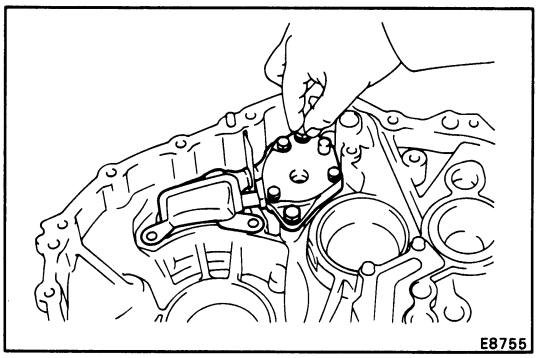

2. INSTALL OIL PUMP ASSEMBLY AND OIL PIPE

(a) Install the oil pump assembly.

(b) Install the two bolts.

NOTE: Be careful not to drop the oil pump gasket.

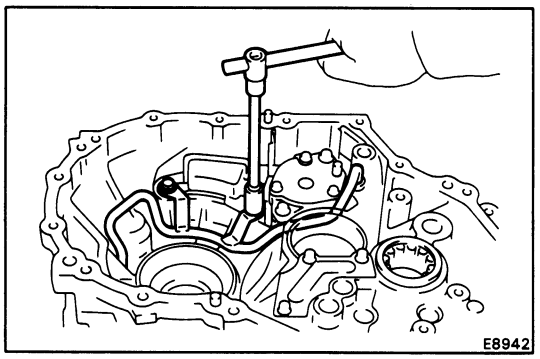

(c) Install the oil pipe and two bolts.

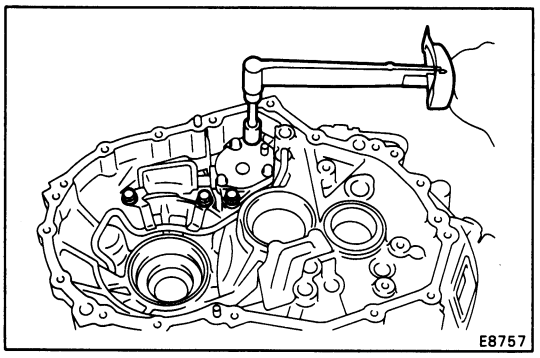

(d) Torque the four bolts.

Torque: 175 kg-cm (13 ft-lb, 17 N·m)

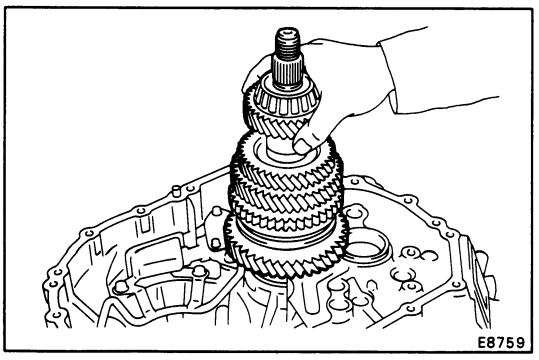

3. ADJUST OUTPUT SHAFT PRELOAD

(a) Install the output shaft assembly.

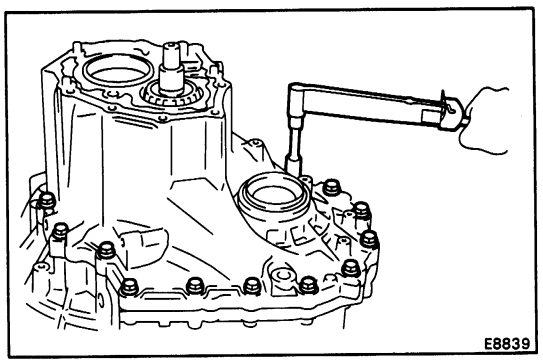

(b) Install the transmission case.

NOTE: If necessary, tap on the case with a plastic hammer.

(c) Install and torque the seventeen bolts.

Torque: 300 kg-cm (22 ft-lb, 29 N·m)

(d) Install the output shaft rear taper roller bearing outer race.

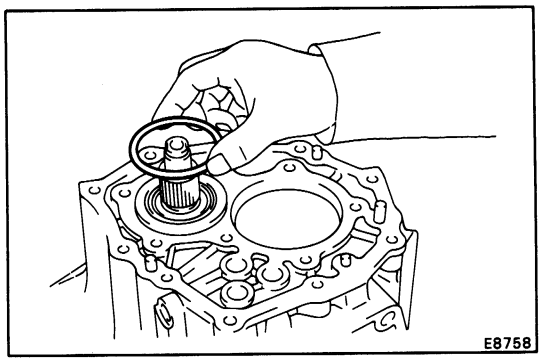

(e) Install the adjust shim.

NOTE: When re-using the output shaft bearing, first install a shim of the same thickness as before. If installing a new tapered roller bearing, first select and install a shim of lesser thickness than than before.

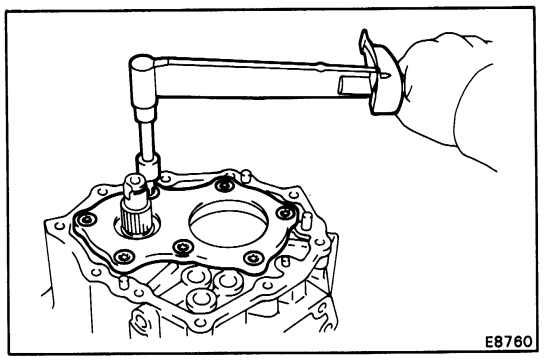

(f) Install the bearing retainer.

(g) Using a torx wrench, install and torque the seven bolts.

Torx wrench T45 09042-00050

Torque: 430 kg-cm (31 ft-lb, 42 N·m)

(h) Install the new lock nut to the output shaft.

(i) Turn the output shaft right and left two or three times to allow the bearings to settle.

(j) Using a torque wrench, measure the preload.

Preload (at starting):

New bearing 8 – 16 kg-cm (6.9 – 13.9 in.-lb, 0.8 – 1.6 N·m)

Reused bearing 5 – 10 kg-cm (4.3 – 8.7 in.-lb, 0.1 –0.2 N·m)

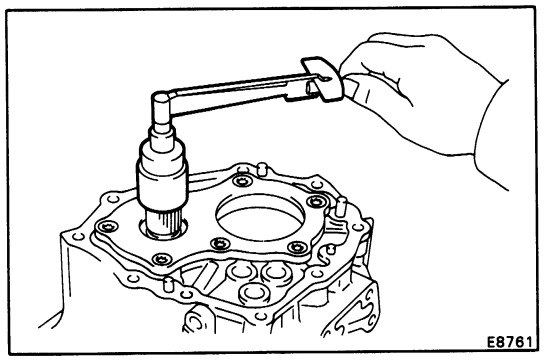

If the preload is not within specification, select the thrust washers.

NOTE: The preload will change about 4 – 5 kg-cm (3.5 – 4.3 in.-lb, 0.4 – 0.5 N·m) with each shim thikness.

Mark	Thickness mm (in.)	Mark	Thickness mm (in.)	Mark	Thickness mm (in.)	Mark	Thickness mm (in.)
0	1.30 (0.0512)	7	1.65 (0.0650)	E	2.00 (0.0787)	M	2.35 (0.0925)
1	1.35 (0.0531)	8	1.70 (0.0669)	F	2.05 (0.0807)	N	2.40 (0.0945)
2	1.40 (0.0551)	9	1.75 (0.0689)	G	2.10 (0.0827)	P	2.45 (0.0965)
3	1.45 (0.0571)	A	1.80 (0.0709)	H	2.15 (0.0846)	Q	2.50 (0.0984)
4	1.50 (0.0591)	B	1.85 (0.0728)	J	2.20 (0.0866)		
5	1.55 (0.0610)	C	1.90 (0.0748)	K	2.25 (0.0886)		
6	1.60 (0.0630)	D	1.95 (0.0768)	L	2.30 (0.0906)		

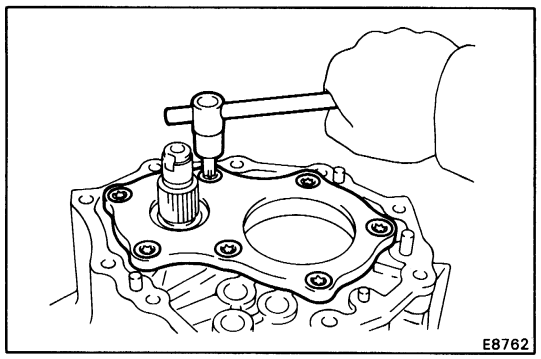

(k) Remove the lock nut.

(l) Using a torx wrench, remove the seven torx screws and rear bearing retainer.

Torx wrench T45 09042-00050

Torque: 430 kg-cm (31 ft-lb, 42 N·m)

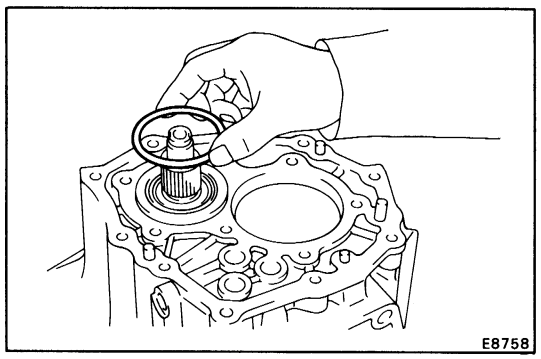

(m) Remove the shim.

(n) Remove the seventeen bolts and transmission case.

(o) Remove the output shaft assembly.

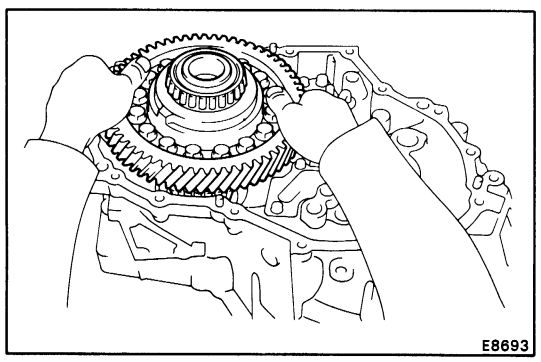

4. INSTALL DIFFERENTIAL CASE ASSEMBLY

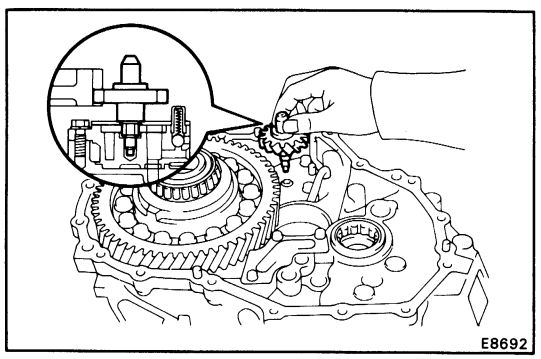

5. INSTALL OIL PUMP DRIVE GEAR

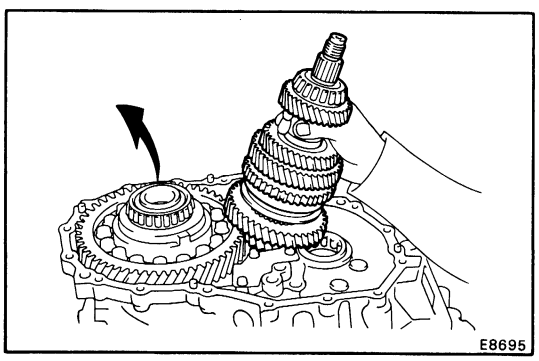

6. INSTALL OUTPUT SHAFT ASSEMBLY

(a) Lift up the differential case, install the input shaft assembly.

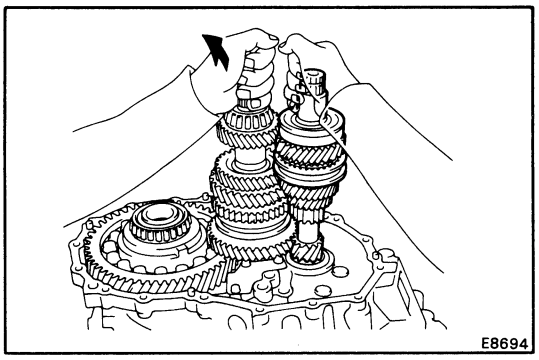

(b) Leaning the output shaft to the differential side, install the input shaft assembly.

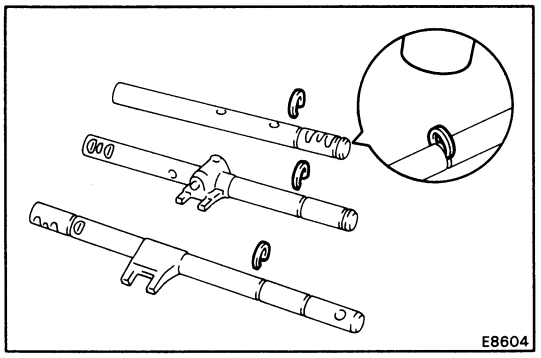

7. INSTALL SNAP RINGS

(a) Using a plastic hammer, install the snap rings to the No. 1, No. 2 and No. 3 shift fork shafts.

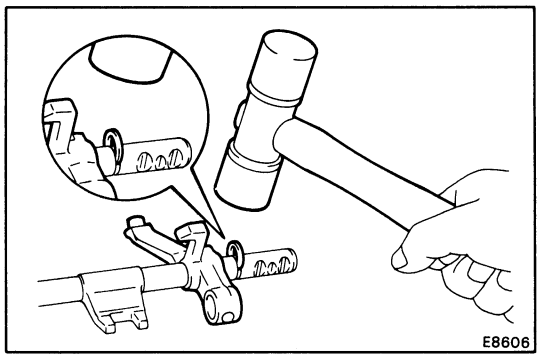

(b) Using a plastic hammer, install the reverse shift fork and snap ring to the No. 3 shift fork shaft.

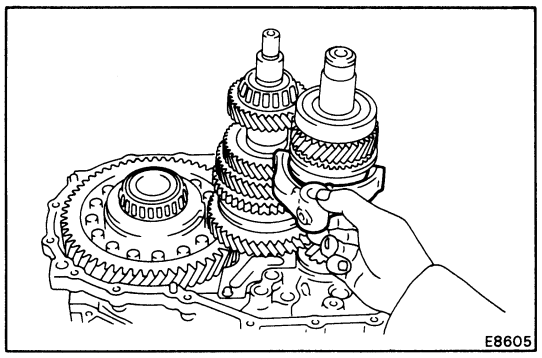

8. INSTALL NO. 2 SHIFT FORK AND NO. 3 SHIFT FORK SHAFT WITH REVERSE SHIFT FORK

(a) Install the No. 2 shift fork to the No. 2 hub sleeve.

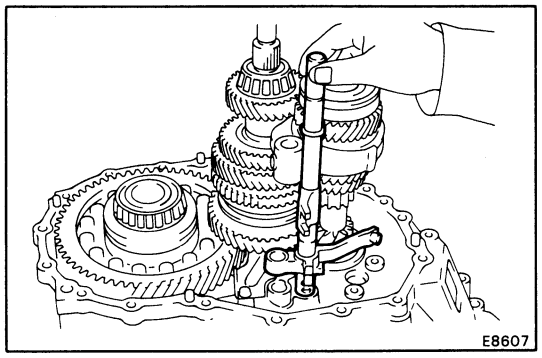

(b) Install the No. 3 shift fork shaft with reverse shift fork.

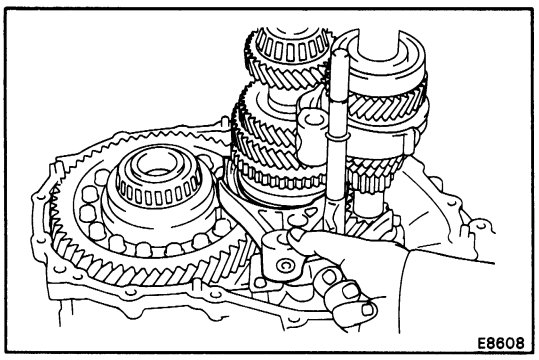

9. INSTALL NO. 1 SHIFT FORK, SHIFT HEAD AND NO. 2 SHIFT FORK SHAFT

(a) Install the No. 1 shift fork to the No. 1 hub sleeve.

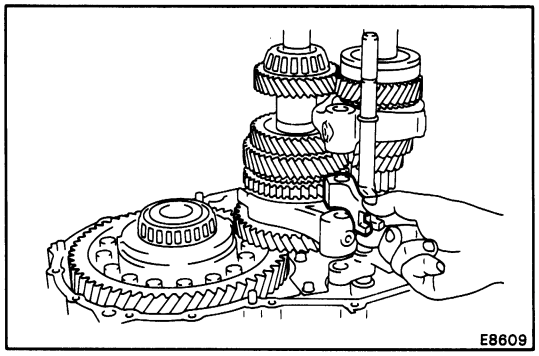

(b) Put shift head onto the No. 1 shift fork.

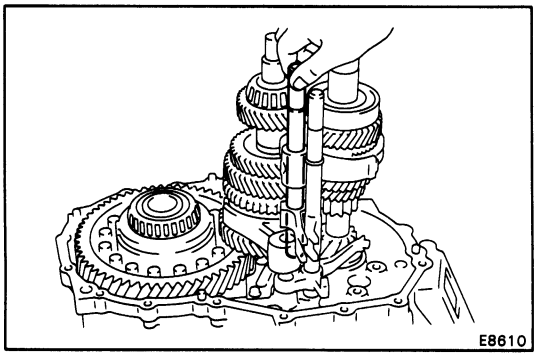

(c) Install the No. 2 shift fork shaft to the transaxle case, through the shift head and No. 1 shift fork.

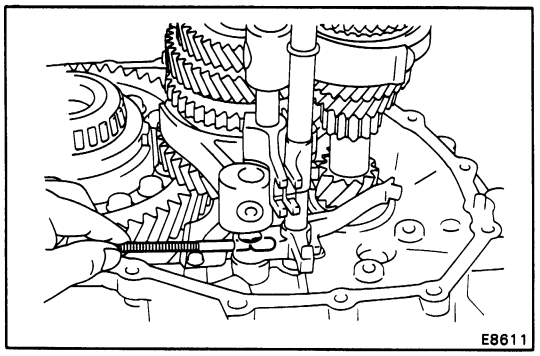

10. INSTALL INTERLOCK ROLLER

Using a magnetic finger, install the interlock roller to the reverse shift fork.

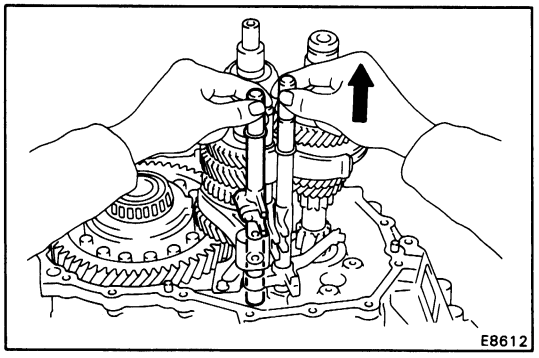

11. INSTALL NO. 1 SHIFT FORK SHAFT

Install the No. 1 shift fork shaft to the case, through the No. 1 shift fork and reverse shift fork.

NOTE: When it is difficult to install the fork shaft through the reverse shift fork, pull up the No. 3 shift fork shaft.

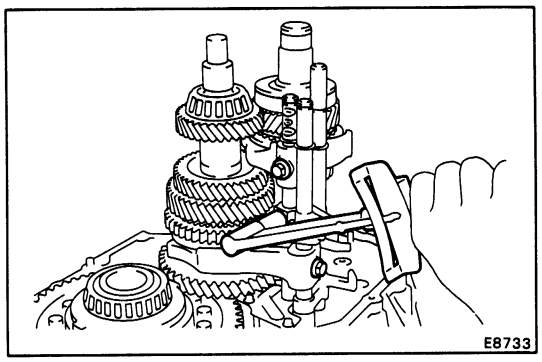

12. INSTALL SET BOLTS

Install and torque the three set bolts.

Torque: 240 kg-cm (17 ft-lb, 24 N·m)

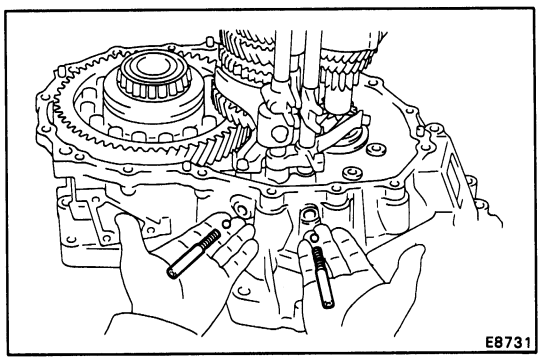

13. INSTALL LOCKING BALLS, SPRINGS, SEATS AND PLUGS

(a) Install the two locking balls, springs and seats.

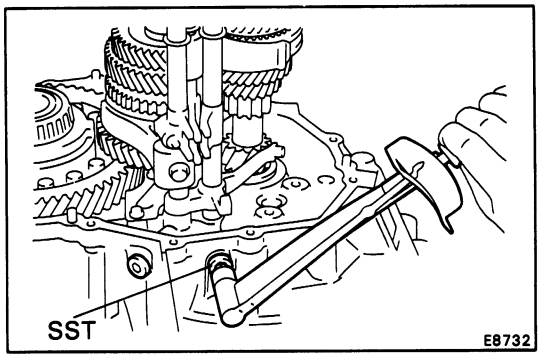

(b) Apply liquid sealant to the two plugs.

Sealant: Part No. 08833-00080, THREE BOND 1344, LOCTITE 242 or equivalent

(c) Using SST, install and torque two plugs.

SST 09313-30021

Torque: 250 kg-cm (18 ft-lb, 25 N·m)

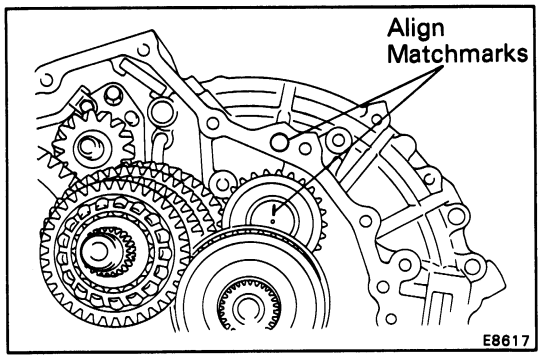

14. INSTALL REVERSE IDLER GEAR AND SHAFT

Install the reverse idler gear and shaft as shown.

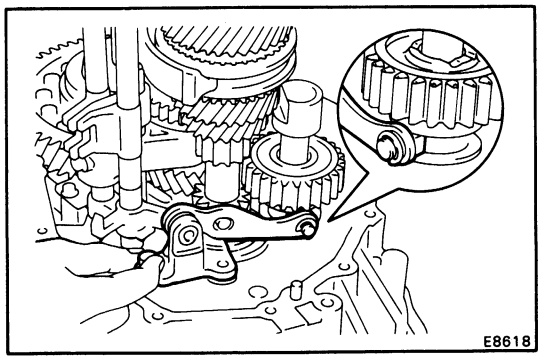

15. INSTALL REVERSE SHIFT ARM BRACKET AND NO. 2 OIL PIPE

(a) Put the reverse shift fork pivot into the reverse shift arm and install the reverse shift arm bracket to the transaxle case.

(b) Install the bolt.

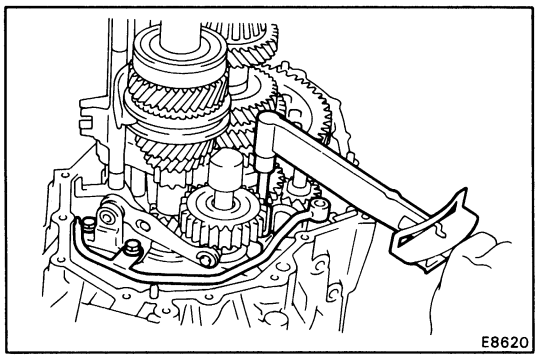

(c) Install the No. 2 oil pipe and two bolts.

(d) Torque the reverse shift arm and oil pump bolts.

Torque: 175 kg-cm (13 ft-lb, 17 N·m)

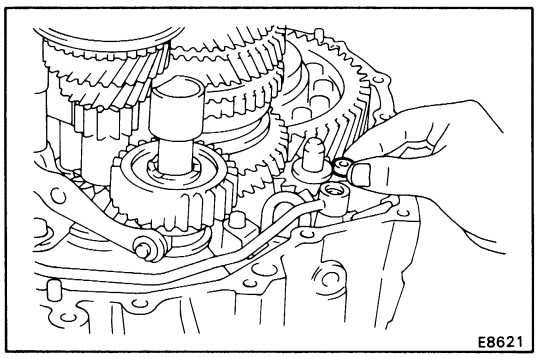

(e) Install the new gasket to the No. 2 oil pipe.

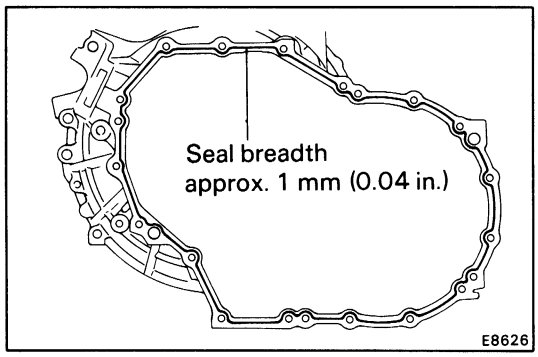

16. INSTALL TRANSMISSION CASE

(a) Remove any packing material and be careful not to drop oil on the contacting surfaces of the transmission case or transaxle case.

(b) Apply seal packing to the transmission case as shown in the figure.

Seal packing: Part No. 08826-00090, THREE BOND 1281 or equivalent

NOTE: Install the transmission case as shown as the seal packing is applied.

(c) Install and torque the seventeen bolts.

Torque: 300 kg-cm (22 ft-lb, 29 N·m)

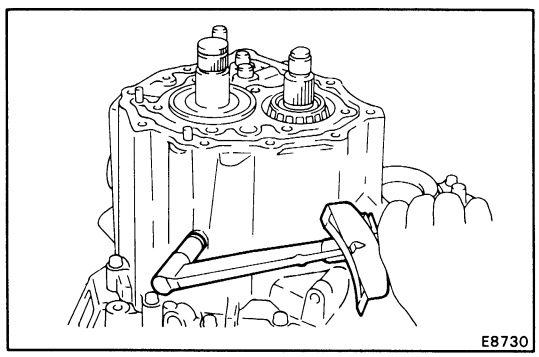

17. INSTALL AND TORQUE REVERSE IDLER GEAR SHAFT RETAINING BOLT

Torque: 300 kg-cm (22 ft-lb, 29 N·m)

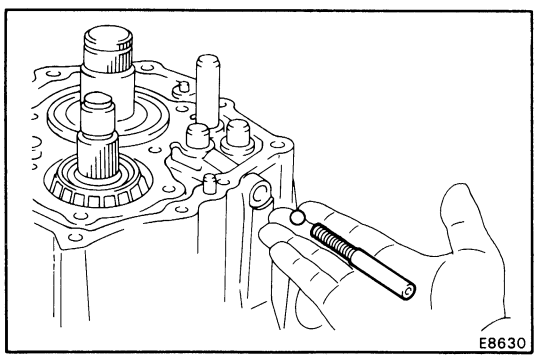

18. INSTALL LOCKING BALL, SPRING, SEAT AND PLUG

(a) Install the locking ball, spring and seat.

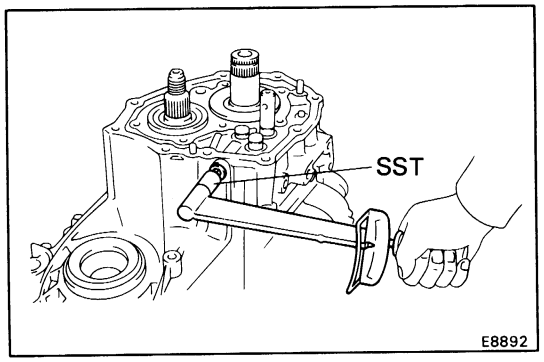

(b) Apply liquid sealant to the plug.

Sealant: Part No. 08833-00080, THREE BOND 1344, LOCTITE 242 or equivalent

(c) Using SST, install and torque the plug.

SST 09313-30021

Torque: 250 kg-cm (18 ft-lb, 25 N·m)

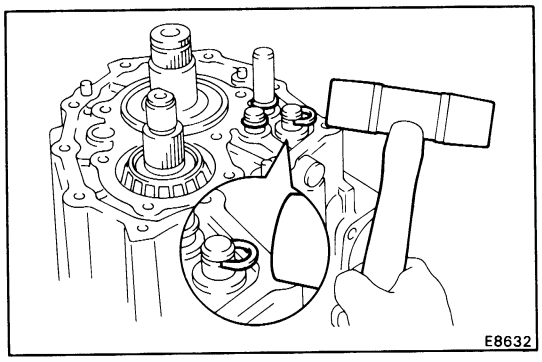

19. INSTALL SNAP RINGS

Using a plastic hammer, install the three snap rings.

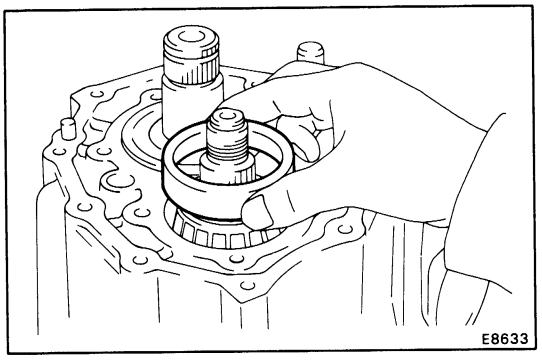

20. INSTALL OUTPUT SHAFT REAR TAPER ROLLER BEARING OUTER RACE

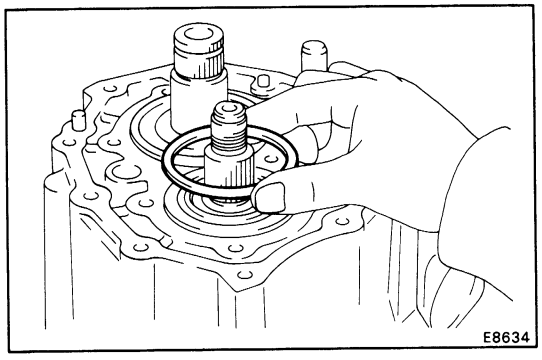

21. INSTALL SHIM

NOTE: Install the previously selected shim.

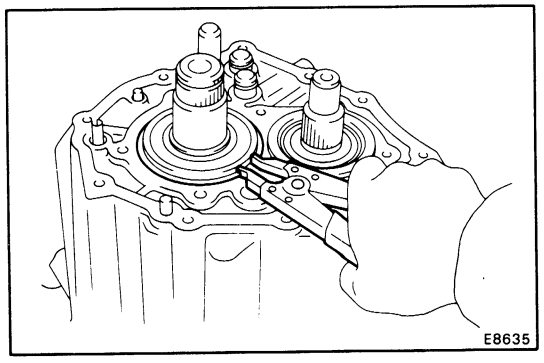

22. INSTALL SNAP RING

Using a snap ring pliers, install the snap ring to the input shaft rear bearing.

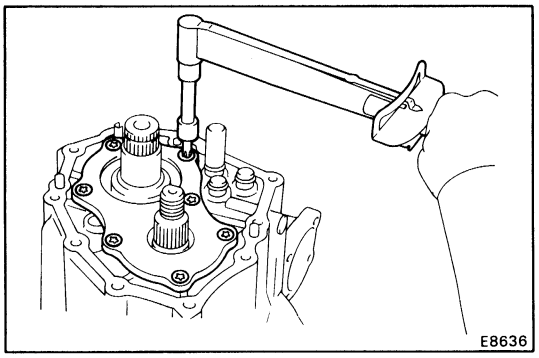

23. INSTALL REAR BEARING RETAINER

(a) Clean the threads of the torx screws.

(b) Using a torx wrench, install and torque the seven torx screws.

Torx wrench T45 09042-00050

Torque: 430 kg-cm (31 ft-lb, 42 N·m)

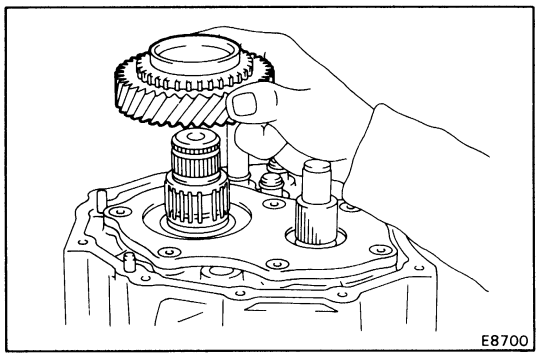

24. INSTALL SPACER, NEEDLE ROLLER BEARING AND FIFTH GEAR

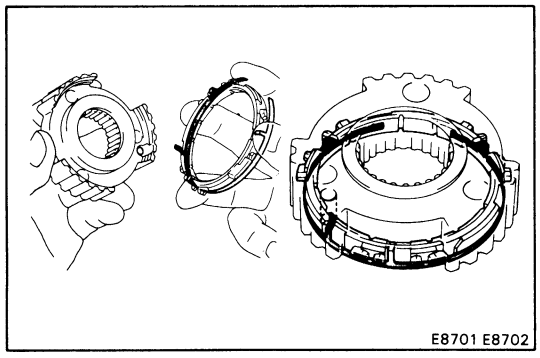

25. INSTALL SYNCHRONIZER RING WITH KEY SPRING TO NO. 3 CLUTCH HUB

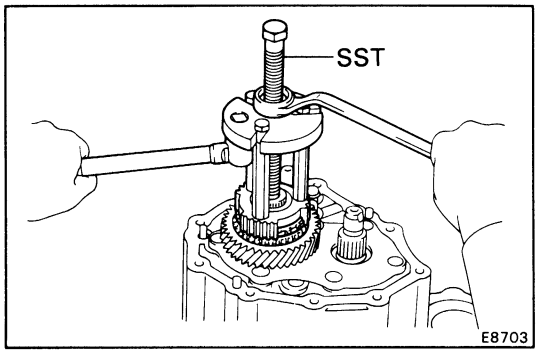

26. INSTALL NO. 3 CLUTCH HUB

Using SST, install the No. 3 clutch hub with synchronizer ring and key spring.

SST 09310-17010 (09310-07010, 09310-07020, 09310-07030)

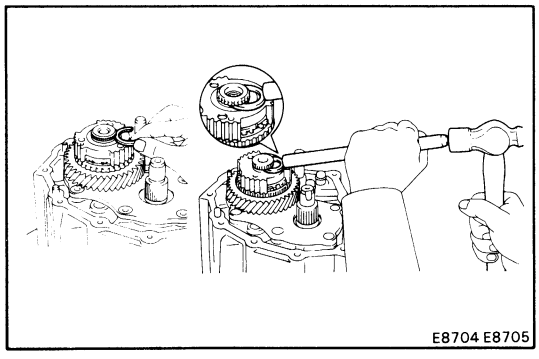

27. INSTALL SNAP RING

Select a snap ring that will allow minimum axial play and install it on the shaft.

Mark	Thickness mm (in.)	Mark	Thickness mm (in.)
Q	2.25 (0.0886)	V	2.50 (0.0984)
R	2.30 (0.0906)	W	2.55 (0.1004)
S	2.35 (0.0925)	X	2.60 (0.1024)
T	2.40 (0.0945)	Y	2.65 (0.1043)
U	2.45 (0.0965)		

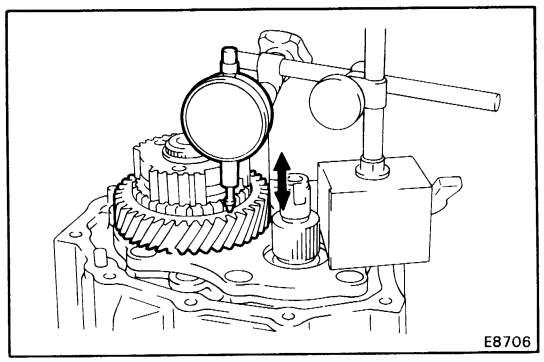

28. MEASURE FIFTH GEAR THRUST CLEARANCE

Using a dial indicator measure the 5th gear thrust clearance.

Standard clearance: 0.10 – 0.57 mm (0.0039 – 0.0224 in.)

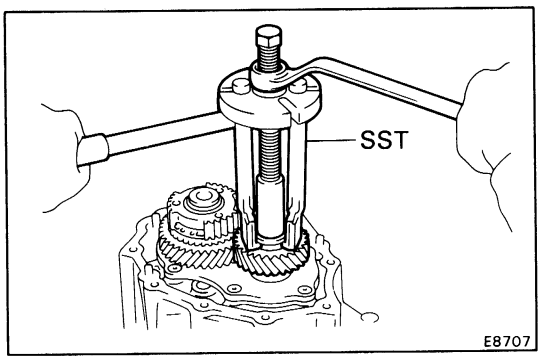

29. INSTALL FIFTH DRIVEN GEAR

Using SST, install the 5th driven gear.

SST 09310-17010 (09310-07010, 09310-07020, 09310-07040, 09310-07050)

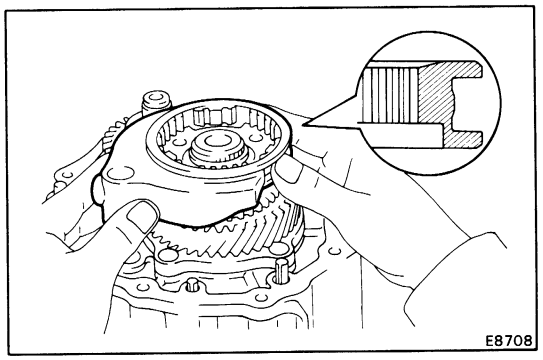

30. INSTALL NO. 3 HUB SLEEVE WITH NO. 3 SHIFT FORK

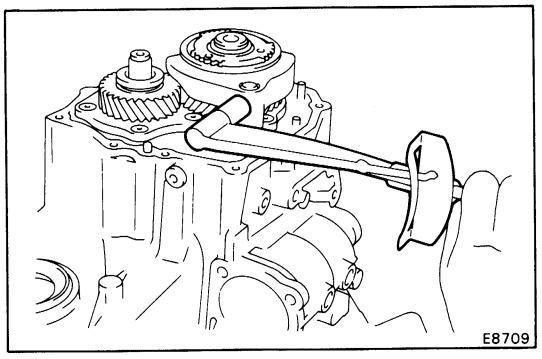

31. INSTALL SET BOLT

Install and torque the set bolt.

Torque: 240 kg-cm (17 ft-lb, 24 N·m)

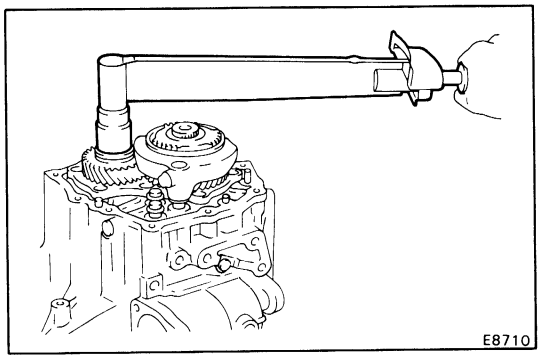

32. INSTALL LOCK NUT

(a) Engage the gear double meshing.

(b) Install and torque the lock nut.

Torque: 1,250 kg-cm (90 ft-lb, 123 N·m)

(c) Disengage the gear double meshing.

(d) Stake the lock nut.

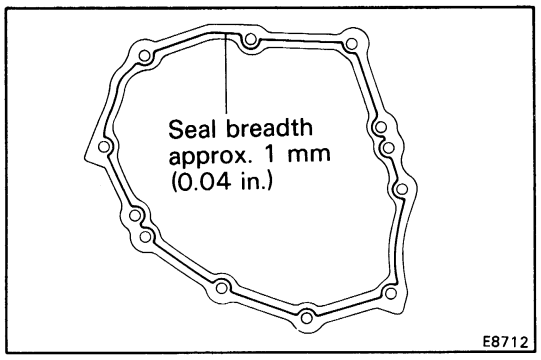

33. INSTALL TRANSMISSION CASE COVER

(a) Remove any packing material and be careful not to drop oil on the contacting surfaces of the transmission case cover.

(b) Apply seal packing to the transmission case as shown in the figure.

Seal packing: Part No. 08826-00090, THREE BOND 1281 or equivalent

NOTE: Install the transmission case cover as soon as the seal packing is applied.

(c) Install and torque the ten bolts.

Torque: 300 kg-cm (22 ft-lb, 29 N·m)

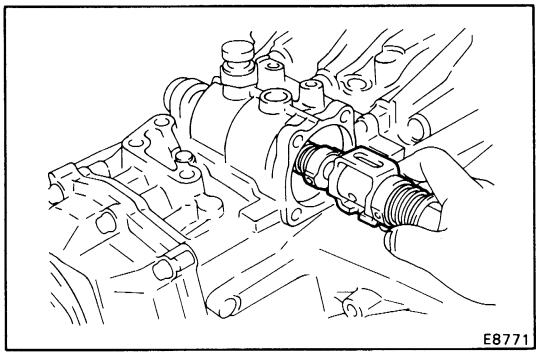

34. INSTALL SHIFT AND SELECT LEVER SHAFT ASSEMBLY

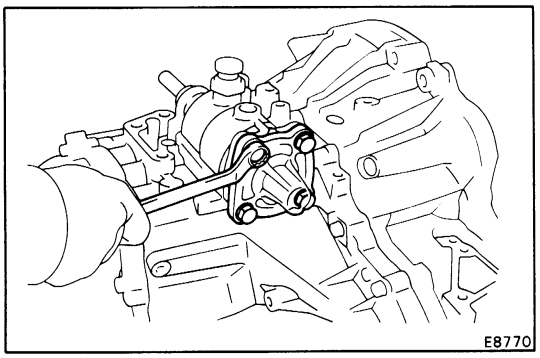

35. INSTALL CONTROL SHAFT COVER

(a) Place a new gasket in position on the control shaft cover.

(b) Install the control shaft cover.

(c) Apply liquid sealant to the bolt threads.

Sealant: Part No. 08833-00080, THREE BOND 1344, LOCTITE 242 or equivalent

(d) Install and torque the bolts.

Torque: 200 kg-cm (14 ft-lb, 20 N·m)

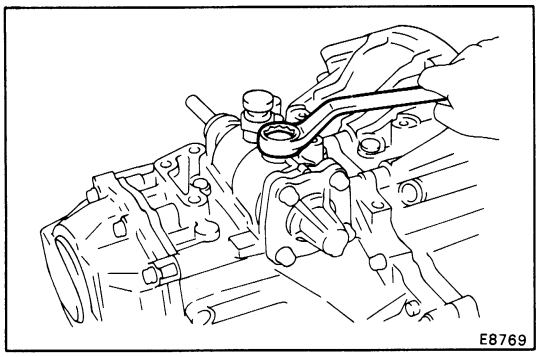

36. INSTALL AND TORQUE LOCK BOLT

Torque: 500 kg-cm (36 ft-lb, 49 N·m)

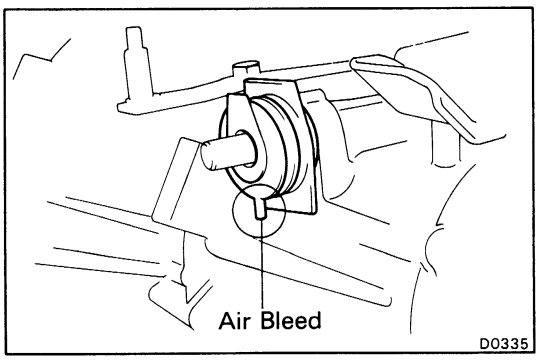

37. INSTALL SHIFT LEVER

(a) Install the boot to the control shaft oil seal.

NOTE: Make sure to install the boot in the correct direction. Position the air bleed of the boot downward.

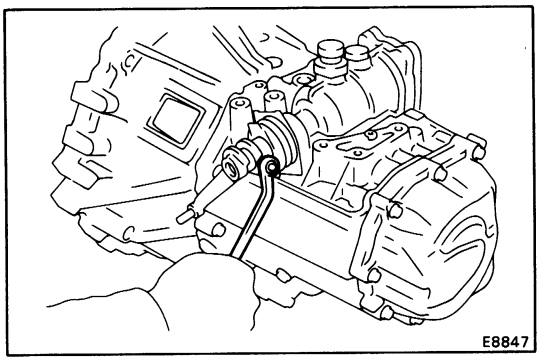

(b) Fit the pin's groove into the shaft's notch and tap on with a hammer.

(c) Install and torque the nut.

Torque: 120 kg-cm (9 ft-lb, 12 N·m)

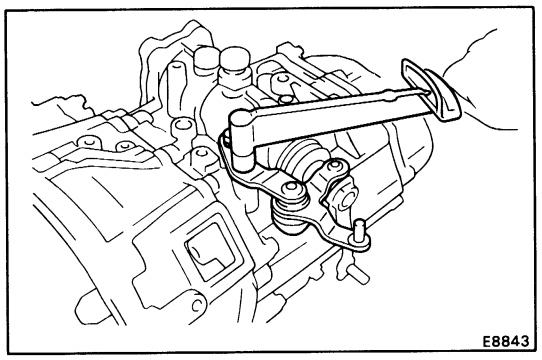

38. INSTALL AND TORQUE SELECTING BELLCRANK ASSEMBLY

Torque: 200 kg-cm (14 ft-lb, 20 N·m)

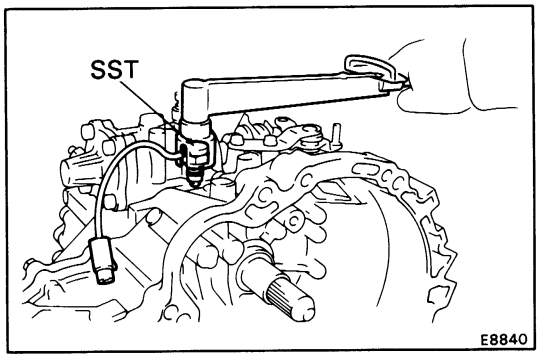

39. INSTALL BACK-UP LIGHT SWITCH

Using SST, install and torque the back-up light switch.

SST 09817-16011

Torque: 410 kg-cm (30 ft-lb, 40 N·m)

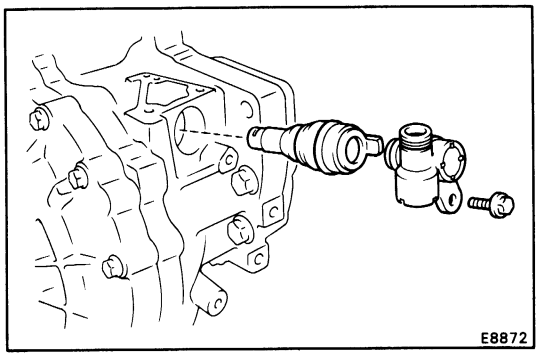

40. INSTALL SPEEDOMETER DRIVEN GEAR

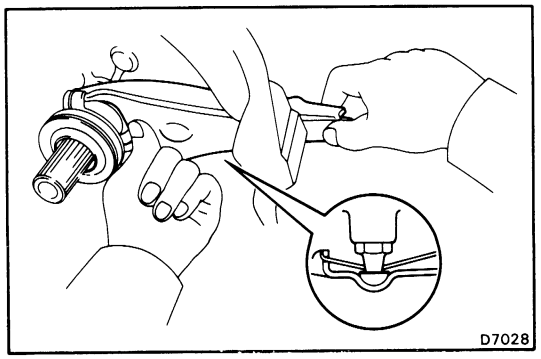

41. INSTALL RELEASE FORK AND BEARING

Apply molybdenum disulphide lithium base grease to the following parts:

- Input shaft spline
- Release fork contact surface

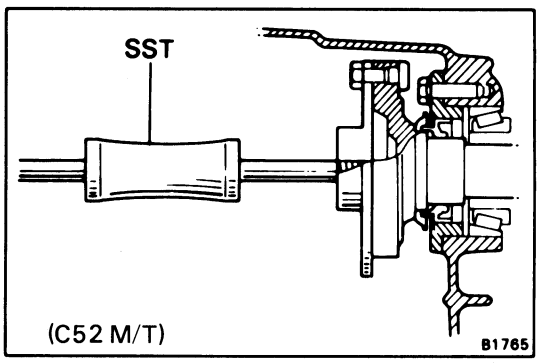

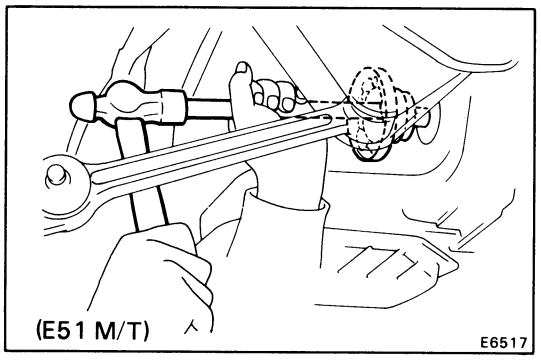

INSTALLATION OF TRANSAXLE

1. INSTALL SIDE GEAR SHAFT TO TRANSAXLE

(a) Insure that a new snap ring is positioned securely in the groove of the side gear shaft.

(b) (C52 M/T)
Using SST, drive in the side gear shaft until it makes contact with the pinion shaft.

SST 09520-32012

(E51 M/T)
Using a brass bar and hammer, drive in the side gear shaft until it makes contact with the pinion shaft.

NOTE: Whether or not the side gear shaft is making contact with the pinion shaft can be known by the sound or feeling when driving it in.

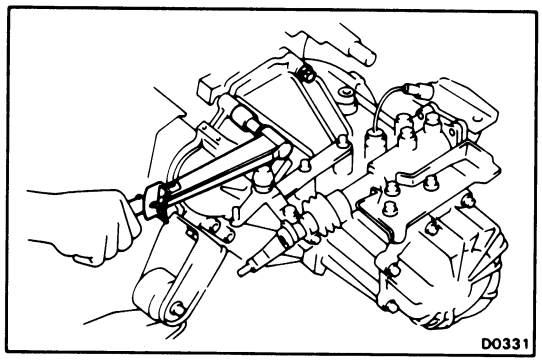

2. INSTALL TRANSAXLE TO ENGINE

Align the input shaft spline with the clutch disc, and install the transaxle to the engine. Torque the bolts.

Torque: 12 mm bolt 650 kg-cm (47 ft-lb, 64 N·m)
10 mm bolt 470 kg-cm (34 ft-lb, 46 N·m)

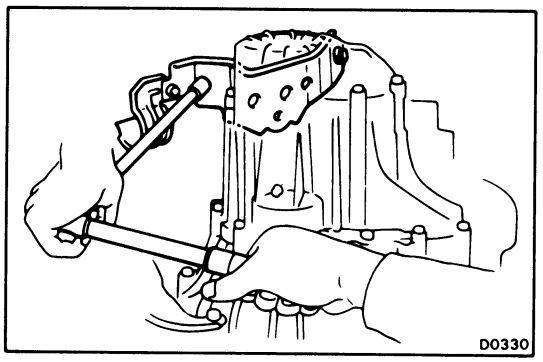

3. INSTALL LEFT ENGINE MOUNTING

Install the left engine mounting with the bolts.
Torque the bolts.

Torque: 530 kg-cm (38 ft-lb, 52 N·m)

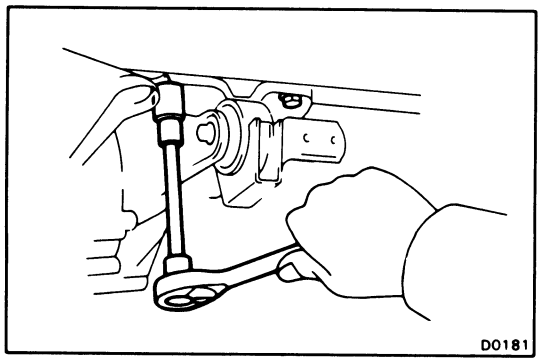

4. INSTALL REAR ENGINE MOUNTING

Install the rear engine mounting with the bolts.
Torque the bolts.

Torque: 530 kg-cm (38 ft-lb, 52 N·m)

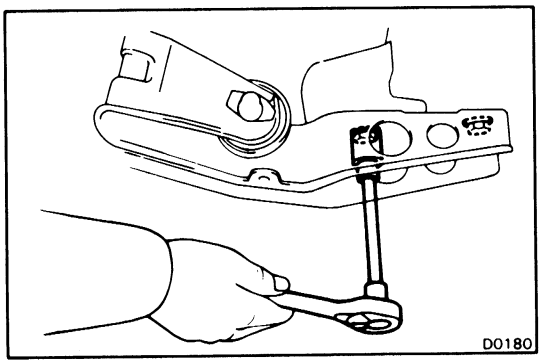

5. INSTALL FRONT ENGINE MOUNTING

(a) Install the front engine mounting with the bolts to the body.

Torque: 530 kg-cm (38 ft-lb, 52 N·m)

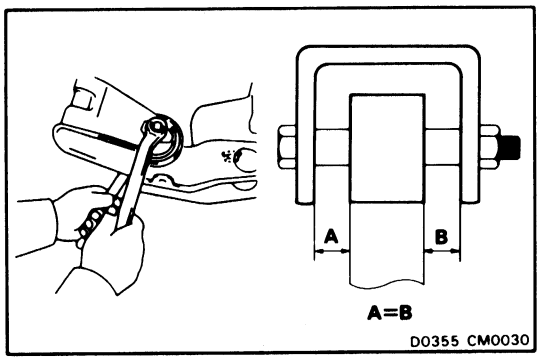

(b) Loosen the insulator set bolt.

(c) By bouncing the engine, confirm the front mount insulator is mounted on the middle of the insulator mount bracket.

(d) Torque the insulator set bolt.

Torque: 800 kg-cm (58 ft-lb, 78 N·m)

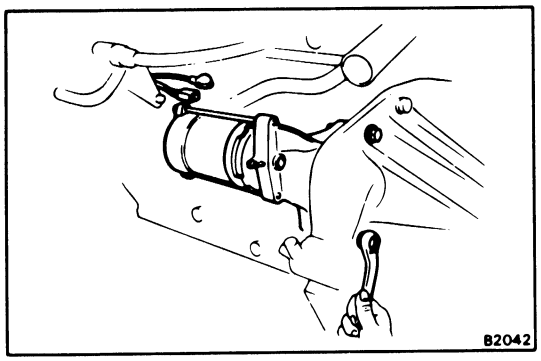

6. INSTALL STARTER

(a) Install the starter with the two bolts.
Torque the bolts.

Torque: 400 kg-cm (29 ft-lb, 39 N·m)

(b) Connect the connector and cable.

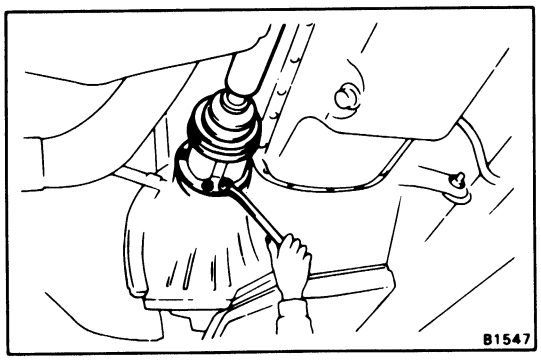

7. CONNECT DRIVE SHAFT TO SIDE GEAR SHAFT

(a) Connect the drive shaft to the side gear shaft.
Torque the nuts.

Torque: 370 kg-cm (27 ft-lb, 36 N·m)

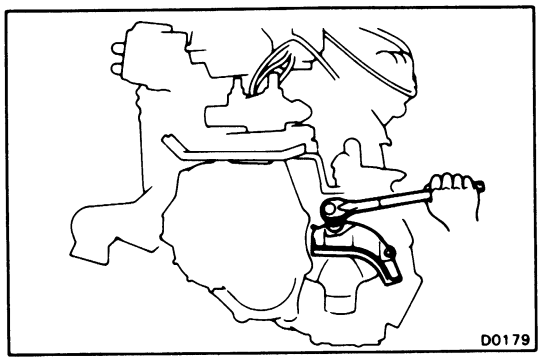

(b) Install the transaxle protector.
Torque the bolts.

Torque: 130 kg-cm (9 ft-lb, 13 N·m)

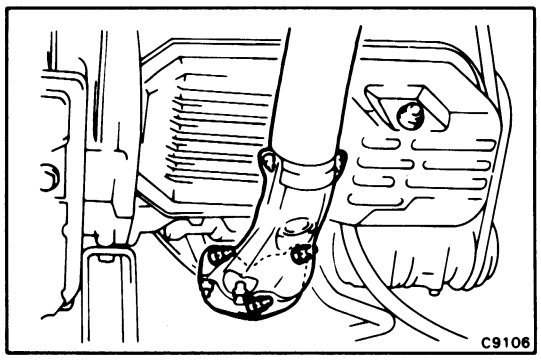

8. INSTALL EXHAUST PIPE ASSEMBLY

(a) Install the exhaust pipe assembly to the rear bracket.

Torque: 210 kg-cm (15 ft-lb, 21 N·m)

(b) Install the front bracket No. 2 to the body.

Torque: 130 kg-cm (9 ft-lb, 13 N·m)

(c) Install the exhaust pipe to the front braket No. 1

Torque: 195 kg-cm (14 ft-lb, 19 N·m)

(d) Connect the exhaust pipe to the exhaust manifold. Torque the nuts.

Torque: 630 kg-cm (46 ft-lb, 62 N·m)

(e) Install the O_2 sensor to the exhaust pipe.

Torque: 200 kg-cm (14 ft-lb, 20 N·m)

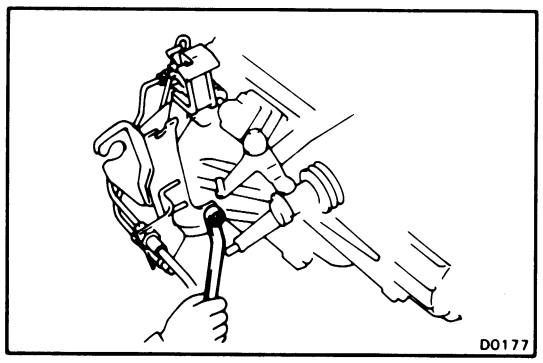

9. INSTALL CONTROL CABLE BRACKET AND CLUTCH RELEASE CYLINDER

(a) Install the control cable bracket and clutch release cylinder. Torque the bolts.

Torque: Transaxle side
650 kg-cm (47 ft-lb, 64 N·m)
Release cylinder side
185 kg-cm (13 ft-lb, 18 N·m)

(b) Install the No. 2 control cable bracket. Torque the bolts.

Torque: 195 kg-cm (14 ft-lb, 19 N·m)

(c) Install the water hose clamp to the control cable bracket.

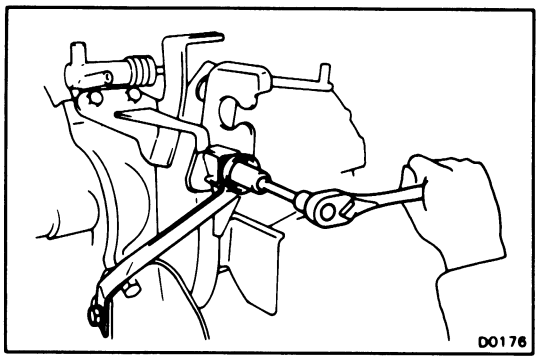

(E51 M/T)
Install the clutch release cylinder pipe bracket and clamp.

Torque the bolts.

Torque: 185 kg-cm (13 ft-lb, 18 N·m)

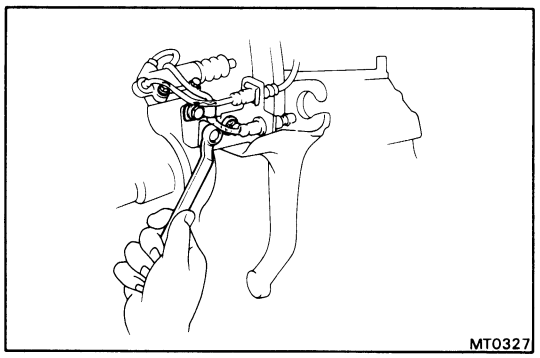

10. CONNECT CONTROL CABLES

(a) Install the two control cables with two retainers to the bracket.

(b) Connect the two control cables to the linkages and install the three washers and two clips.

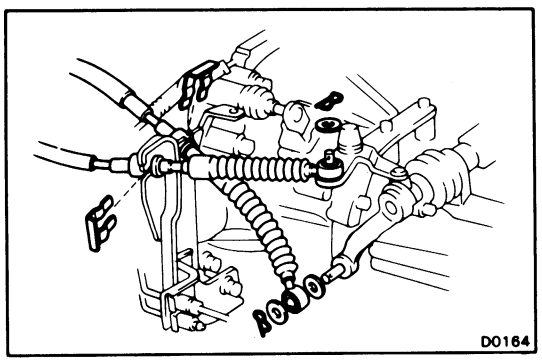

11. INSTALL FUEL TANK PROTECTOR

12. INSTALL ENGINE UNDER COVER

13. INSTALL NO. 2 ENGINE REAR PLATE

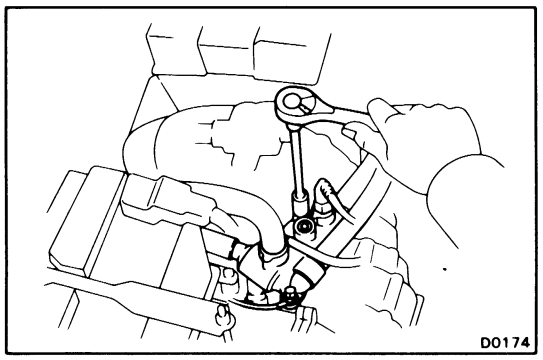

14. INSTALL WATER INLET

(a) Set the ground strap.

(b) Install the water inlet with the bolts.
Torque the bolts.

Torque: 200 kg-cm (14 ft-lb, 20 N·m)

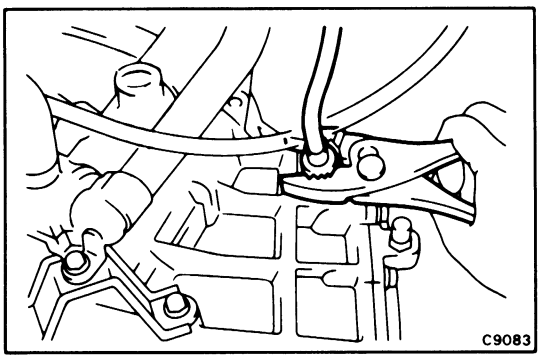

15. INSTALL SPEEDOMETER CABLE

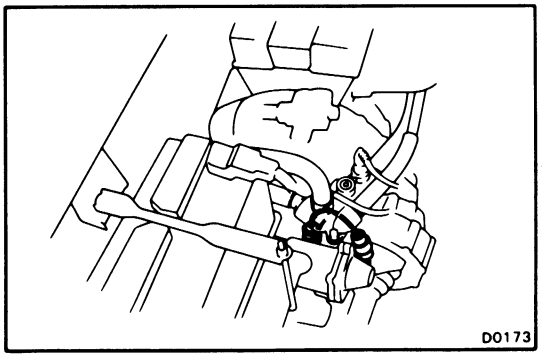

16. CONNECT BACK-UP LIGHT SWITCH CONNECTOR

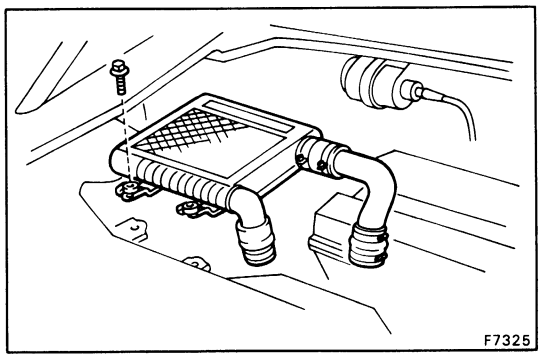

17. (E51 M/T) INSTALL INTERCOOLER

Install the intercooler and four bolts, connect the two hose clamps.

Torque the bolts.

Torque: 175 kg-cm (13 ft-lb, 17 N·m)

18. INSTALL NEGATIVE BATTERY TERMINAL WIRE

19. FILL TRANSAXLE WITH GEAR OIL

(C52 M/T)
Oil grade: API GL-4 or GL-5
Viscosity: SAE 75W — 90 or 80W — 90
Capacity: 2.6 liters (2.7 US qts, 2.3 Imp. qts)

(E51 M/T)
Oil grade: API GL-4 or GL-5
Viscosity: SAE 75W — 90 or 80W — 90
Capacity: 4.2 liters (4.4 US qts, 3.7 Imp. qts)

20. PERFORM ROAD TEST

Check for abnormal noise and smooth operation.

SHIFT LEVER AND CONTROL CABLE

COMPONENTS

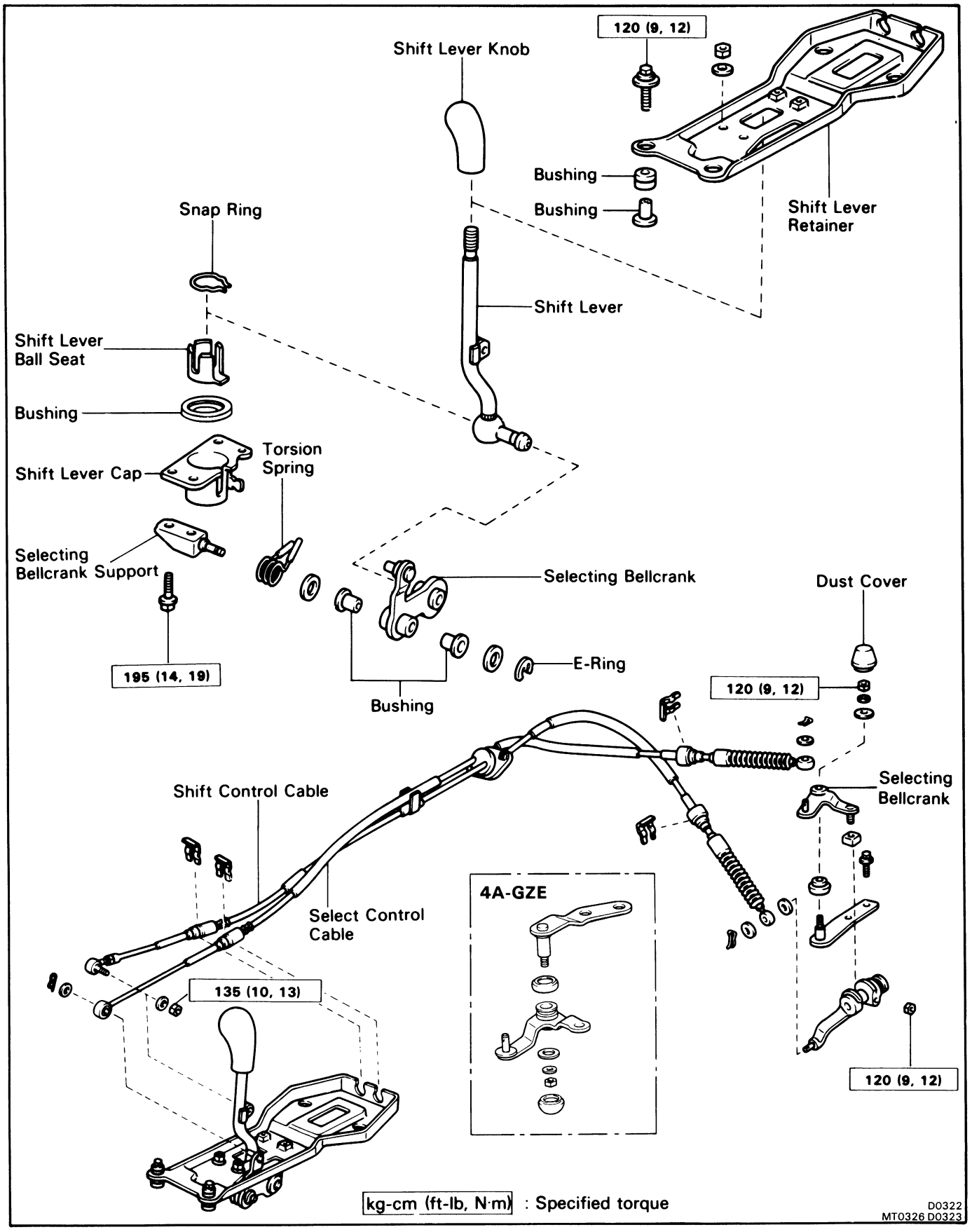

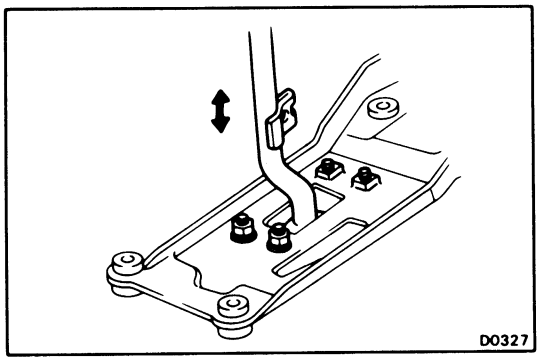

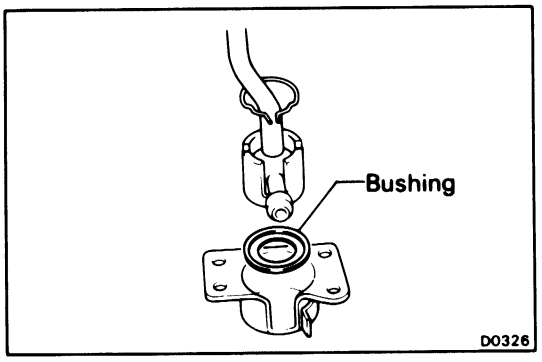

INSPECTION OF SHIFT LEVER

INSPECT SHIFT LEVER PLAY

Check that there is no vertical play in the shift lever. If there is any play, replace bushing.

AUTOMATIC TRANSAXLE

	Page
SYSTEM DESCRIPTION	AT-2
TROUBLESHOOTING	AT-2
Basic Troubleshooting	AT-2
General Troubleshooting	AT-3
Preliminary Check	AT-5
Manual Shifting Test	AT-7
Stall Test	AT-8
Time Lag Test	AT-9
Hydraulic Test	AT-10
Road Test	AT-11
Electronic Control System	AT-15
OPERATING MECHANISM FOR EACH GEAR	AT-30
AUTOMATIC SHIFT SCHEDULE (A240E/4A-GE)	AT-31
AUTOMATIC SHIFT SCHEDULE (A241E/4A-GZE)	AT-32
ON-VEHICLE REPAIR	AT-33
REMOVAL OF TRANSAXLE	AT-40
TORQUE CONVERTER	AT-44
OIL PUMP	AT-44
DISASSEMBLY OF TRANSMISSION	AT-46
COMPONENT GROUP DISASSEMBLY, INSPECTION AND ASSEMBLY	AT-66
Oil Pump	AT-67
Direct Clutch	AT-70
Forward Clutch	AT-73
No.1 One-Way Clutch and Sun Gear	AT-76
No.2 One-Way Clutch and Rear Planetary Gear	AT-78
First and Reverse Brake Piston	AT-80
Intermediate Shaft	AT-82
Counter Shaft	AT-84
Valve Body	AT-92
ASSEMBLY OF TRANSMISSION	AT-108
DIFFERENTIAL	AT-130
INSTALLATION OF TRANSAXLE	AT-140

SYSTEM DESCRIPTION

The transaxle for A240E and A241E, also called Electronic Controlled Transaxle (ECT), differs from the oil pressure control type transaxle in that it is controlled by a microcomputer. Accordingly, troubleshooting procedures differ also.
Trouble occurring in the ECT can stem from one of three sources: the engine, the ECT electronic control unit or the transaxle itself. Before troubleshooting, determine in which of these three sources the problem lies, and begin troubleshooting with the simplest operation, gradually working up in order of difficulty.

TROUBLESHOOTING

Basic Troubleshooting

Before troubleshooting an ECT, first determine whether the problem is electrical or mechanical. To do this, just refer to the basic troubleshooting flow-chart provided below.
If the cause is already known, using the basic troubleshooting chart below along with the general troubleshooting chart on the following page should speed the procedure.

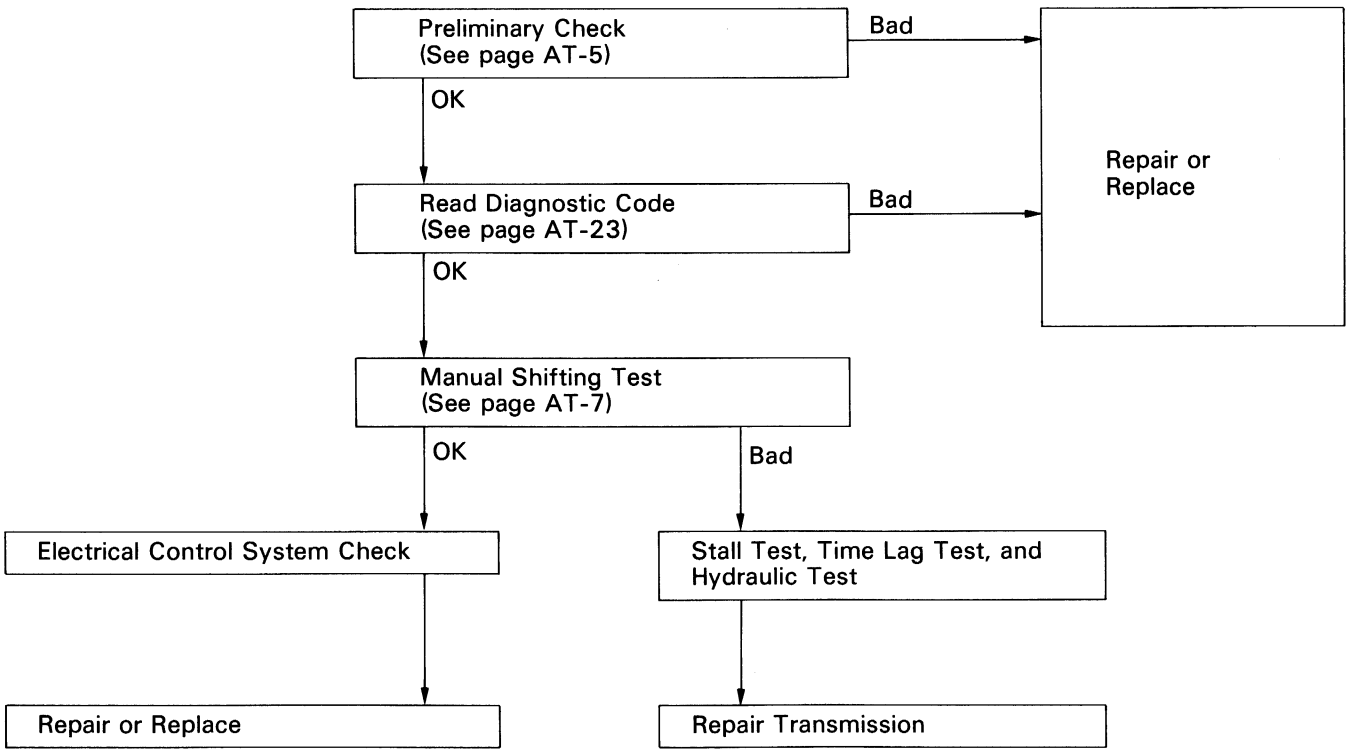

General Troubleshooting

Problem	Possible cause	Remedy	Page
Fluid discolored or smells burnt	Fluid contaminated	Replace fluid	AT-5
	Torque converter faulty	Replace torque converter	AT-44
	Transmission faulty	Disassemble and inspect transmission	AT-46
Vehicle does not move in any forward range or reverse	Control cable out of adjustment	Adjust control cable	AT-6
	Valve body or primary regulator faulty	Inspect valve body	AT-92
	Parking lock pawl faulty	Inspect parking lock pawl	AT-62
	Torque converter faulty	Replace torque converter	AT-44
	Oil pump intake screen blocked	Clean screen	
	Transmission faulty	Disassemble and inspect transmission	AT-46
Shift lever position incorrect	Control cable out of adjustment	Adjust control cable	AT-6
	Manual valve and lever faulty	Inspect valve body	AT-92
	Transmission faulty	Disassemble and inspect transmission	AT-46
Harsh engagement into any drive range	Throttle cable out of adjustment	Adjust throttle cable	AT-6
	Valve body or primary regulator faulty	Inspect valve body	AT-92
	Transmission faulty	Disassemble and inspect transmission	AT-46
Delayed 1-2, 2-3 or 3-OD up-shift, or down-shifts from OD-3 or 3-2 and shifts back to 4 or 3	Throttle cable out of adjustment	Adjust throttle cable	AT-6
	Valve body faulty	Inspect valve body	AT-92
	Solenoid valve faulty	Inspect solenoid valve	AT-27
Slips on 1-2, 2-3 or 3-OD up-shift, or slips or shudders on acceleration	Control cable out of adjustment	Adjust control cable	AT-6
	Throttle cable out of adjustment	Adjust throttle cable	AT-6
	Valve body faulty	Inspect valve body	AT-92
	Solenoid valve faulty	Inspect solenoid valve	AT-17
	Transmission faulty	Disassemble and inspect transmission	AT-46
Vehicle does not hold in P range	Control cable out of adjustment	Adjust control cable	AT-6
	Parking lock pawl cam and spring faulty	Inspect cam and spring	AT-62

General Troubleshooting (Cont'd)

Problem	Possible cause	Remedy	Page
Drag, binding or tie-up on 1-2, 2-3 or 3-OD up-shift	Control cable out of adjustment	Adjust control cable	AT-6
	Valve body faulty	Inspect valve body	AT-92
	Transmission faulty	Disassemble and inspect transmission	AT-46
No lock-up in 2nd, 3rd or OD	Electronic control faulty	Inspect electronic control	AT-15
	Valve body faulty	Inspect valve body	AT-92
	Solenoid valve faulty	Inspect solenoid valve	AT-27
	Transmission faulty	Disassemble and inspect transmission	AT-46
Harsh down-shift	Throttle cable out of adjustment	Adjust throttle cable	AT-6
	Valve body faulty	Inspect valve body	AT-92
	Transmission faulty	Disassemble and inspect transmission	AT-46
No down-shift when coasting	Valve body faulty	Inspect valve body	AT-92
	Solenoid valve faulty	Inspect solenoid valve	AT-27
	Electronic control faulty	Inspect electronic control	AT-15
Down-shift occurs too quickly or too late while coasting	Throttle cable out of adjustment	Adjust throttle cable	AT-6
	Valve body faulty	Inspect valve body	AT-92
	Transmission faulty	Disassemble and inspect transmission	AT-46
	Solenoid valve faulty	Inspect solenoid valve	AT-27
	Electronic control faulty	Inspect electronic control	AT-15
No OD-3, 3-2 or 2-1 kick-down	Throttle cable out of adjustment	Adjust throttle cable	AT-6
	Solenoid valve faulty	Inspect solenoid valve	AT-92
	Electronic control faulty	Inspect electronic control	AT-15
	Valve body faulty	Inspect valve body	AT-92
No engine braking in 2 or L range	Solenoid valve faulty	Inspect solenoid valve	AT-27
	Electronic control faulty	Inspect electronic control	AT-15
	Valve body faulty	Inspect valve body	AT-92
	Transmission faulty	Disassemble and inspect transmission	AT-46

Preliminary Check

1. CHECK FLUID LEVEL

NOTE: The vehicle must have been driven so that the engine and transmission are at normal operating temperature. (fluid temperature: 70 – 80°C or 158 – 176°F)

(a) Park the vehicle on a level surface, set the parking brake.

(b) With the engine idling, shift the selector into each gear from P range to L range and return to P range.

(c) Pull out the transmission dipstick and wipe it clean.

(d) Push it back fully into the tube.

(e) Pull it out and check that the fluid level is in the HOT range. If the level is at the low side of the HOT range, add fluid.

Fluid type: ATF DEXRON® II

CAUTION: Do not overfill.

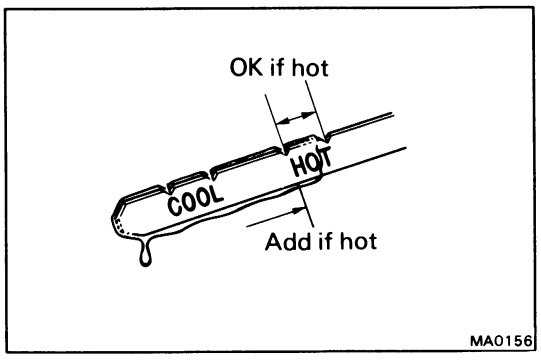

2. CHECK FLUID CONDITION

If the fluid smells burnt or is black, replace it.

3. REPLACE ATF

CAUTION: Do not overfill.

(a) Remove the drain plug and drain the fluid.

(b) Reinstall the drain plug securely.

(c) With the engine OFF, and new fluid through the filler tube.

Fluid: ATF DEXRON® II

Capacity:

A240E/4A-GE	**7.9 liters (8.4 US qts, 7.0 Imp. qts)**
A241E/4A-GZE	**8.0 liters (8.5 US qts, 7.0 Imp. qts)**

Drain and refill (Reference):
3.1 liters (3.3 US qts, 2.7 Imp. qts)

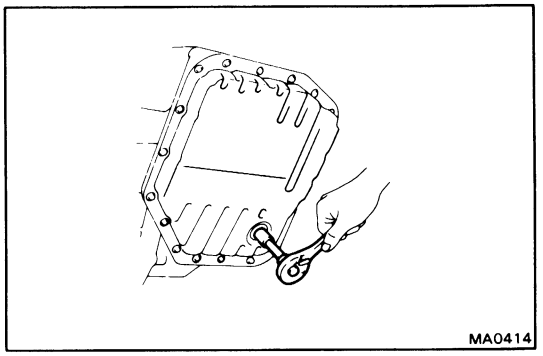

(d) Start the engine and shift the selector into all positions from P through L and then shift into P.

(e) With the engine idling, check the fluid level. Add fluid up to the "COOL" level on the dipstick.

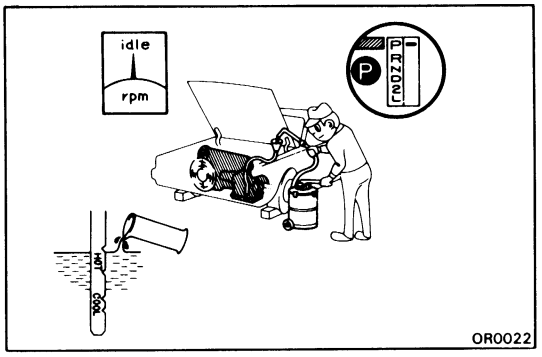

(f) Check the fluid level with the normal fluid temperature (70 – 80°C or 158 – 176°F) and add as necessary.

CAUTION: Do not overfill.

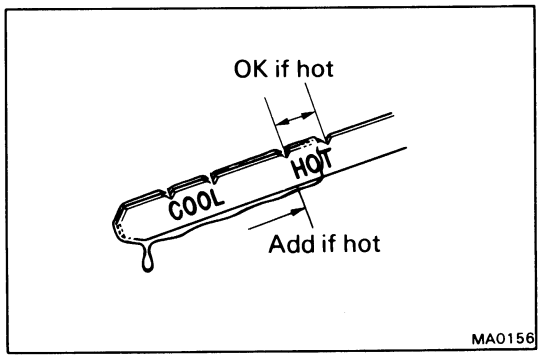

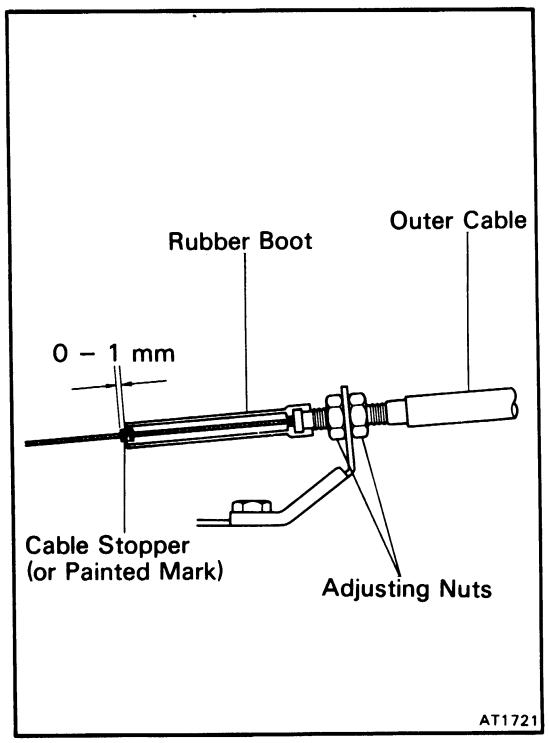

4. INSPECT AND ADJUST THROTTLE CABLE

(a) Depress the accelerator pedal all the way and check that the throttle valve opens fully.

NOTE: If the valve does not open fully, adjust the accelerator link.

(b) Fully depress the accelerator.

(c) Loosen the adjustment nuts.

(d) Adjust the cable housing so that the distance between the end of the boot and stopper on the cable is the standard.

Standard boot and cable stopper distance:
0 – 1 mm (0 – 0.04 in.)

(e) Tighten the adjusting nuts.

(f) Recheck the adjustments.

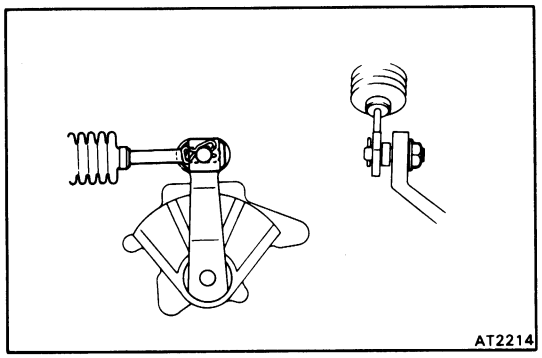

5. ADJUST CONTROL CABLE

(a) Loosen the swivel nut on manual shift lever.

(b) Push the manual lever fully toward the right side of the vehicle.

(c) Return the lever two notches to NEUTRAL position.

(d) Set the shift lever to N.

(e) While holding the lever lightly toward the R range side, tighten the swivel nut.

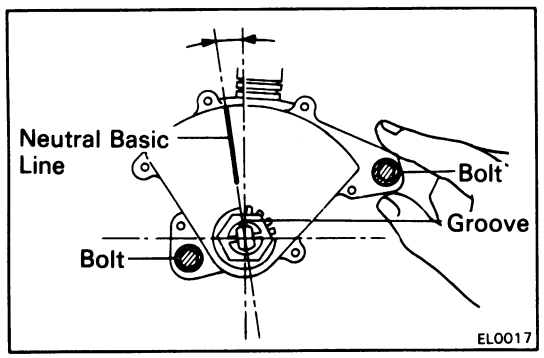

6. ADJUST NEUTRAL START SWITCH

If the engine will start with the shift selector in any range other than N or P range, adjustment is required.

(a) Loosen the neutral start switch bolts and set the shift selector to the N range.

(b) Align the groove and neutral basic line.

(c) Hold in position and tighten the bolts.

Torque: 55 kg-cm (48 in.-lb, 5.4 N·m)

7. INSPECT IDLE SPEED (N RANGE)

Idle speed: 800 rpm

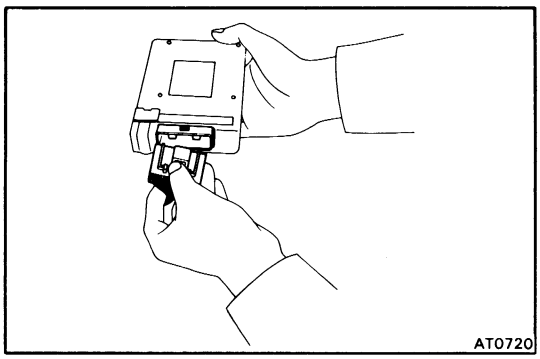

Manual Shifting Test

NOTE: With this test, it can be determined whether the trouble lies within the electrical circuit or is a mechanical problem in the transmission.

1. DISCONNECT ECT COMPUTER CONNECTOR

(a) Remove the luggage compartment panel.

(b) With the engine OFF, disconnect the ECT connector.

2. INSPECT MANUAL DRIVING OPERATION

Check that the shift and gear positions correspond with the table below.

Shift position	D range	2 range	L range	R range	P range
Gear position	OD	3rd	1st	Reverse	Pawl Lock

If the L, 2 and D range gear positions are difficult to distinguish, do not perform the following road test.

(a) While driving, shift through the L, 2 and D ranges and back up again. Check that the gear change corresponds to the gear position.

(b) While driving shift through the D, 2 and L ranges and back down again. Check that the gear change corresponds to the gear position.

If any abnormality is found in the above tests do not perform the stall, time lag or gear change tests.

3. CONNECT ECT COMPUTER CONNECTOR

(a) Connect the ECT computer connector.

(b) Install the center cluster.

Stall Test

The object of this test is to check the overall performance of the transmission and engine by measuring the maximum engine speeds in D and R ranges.

CAUTION:

(a) Perform the test at normal operating fluid temperature (50 – 80°C or 122 – 176°F).

(b) Do not continuously run this test longer than 5 seconds.

MEASURE STALL SPEED

(a) Chock the front and rear wheels.

(b) Mount an engine tachometer.

(c) Fully apply the parking brake.

(d) Keep your left foot pressed firmly on the brake pedal.

(e) Start the engine.

(f) Shift into D range. Step all the way down on the accelerator pedal with your right foot.
Quickly read the highest engine rpm at this time.

Stall speed:

A240E/4A-GE	**2,150 ± 150 rpm**
A241E/4A-GZE	**2,650 ± 150 rpm**

(g) Perform the same test in R range.

EVALUATION

(a) If the engine speed is the same for both ranges but lower than specified value:
- Engine output may be insufficient.
- Stator one-way clutch is not operating properly.

(b) If the stall speed in D range is higher than specified:
- Line pressure too low
- Forward clutch slipping
- One-way clutch No. 2 not operating properly
- UD one-way clutch not operating properly

(c) If the stall speed in R range is higher than specified:
- Line pressure too low
- Direct clutch slipping
- First and reverse brake slipping
- UD brake slipping

(d) If the stall speed in R and D ranges is higher than specified:
- Line pressure too low
- Improper fluid level
- UD brake slipping

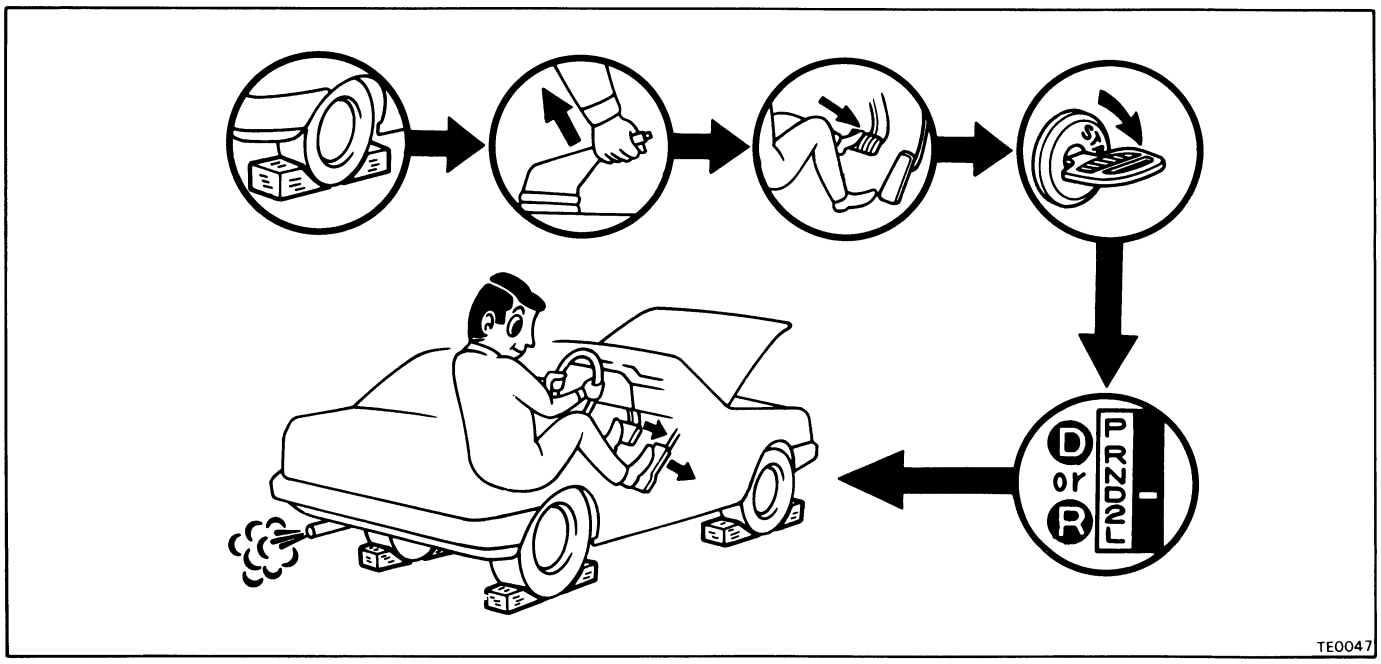

TE0047

Time Lag Test

If the shift lever is shifted while the engine is idling, there will be a certain time lapse or lag before the shock can be felt. This is used for checking the condition of the OD clutch, forward clutch, direct clutch and first and reverse brake.

CAUTION:

(a) Perform the test at normal operating fluid temperature (50 – 80°C or 122 – 176°F).

(b) Be sure to allow one minute interval between tests.

(c) Make three measurements and take the average value.

MEASURE TIME LAG

(a) Fully apply the parking brake.

(b) Start the engine and check the idle speed.

Idling speed: 800 rpm

(c) Shift the shift lever from N to D range. Using a stop watch, measure the time it takes from shifting the lever until the shock is felt.

Time lag: Less than 1.2 seconds

(d) In same manner, measure the time lag for N → R.

Time lag: Less than 1.5 seconds

EVALUATION

(a) If N → D time lag is longer than specified:

- Line pressure too low
- Forward clutch worn
- No. 2 and UD one-way clutch not operating properly

(b) If N → R time lag is longer than specified:

- Line pressure too low
- Direct clutch worn
- First and reverse brake worn
- UD brake worn

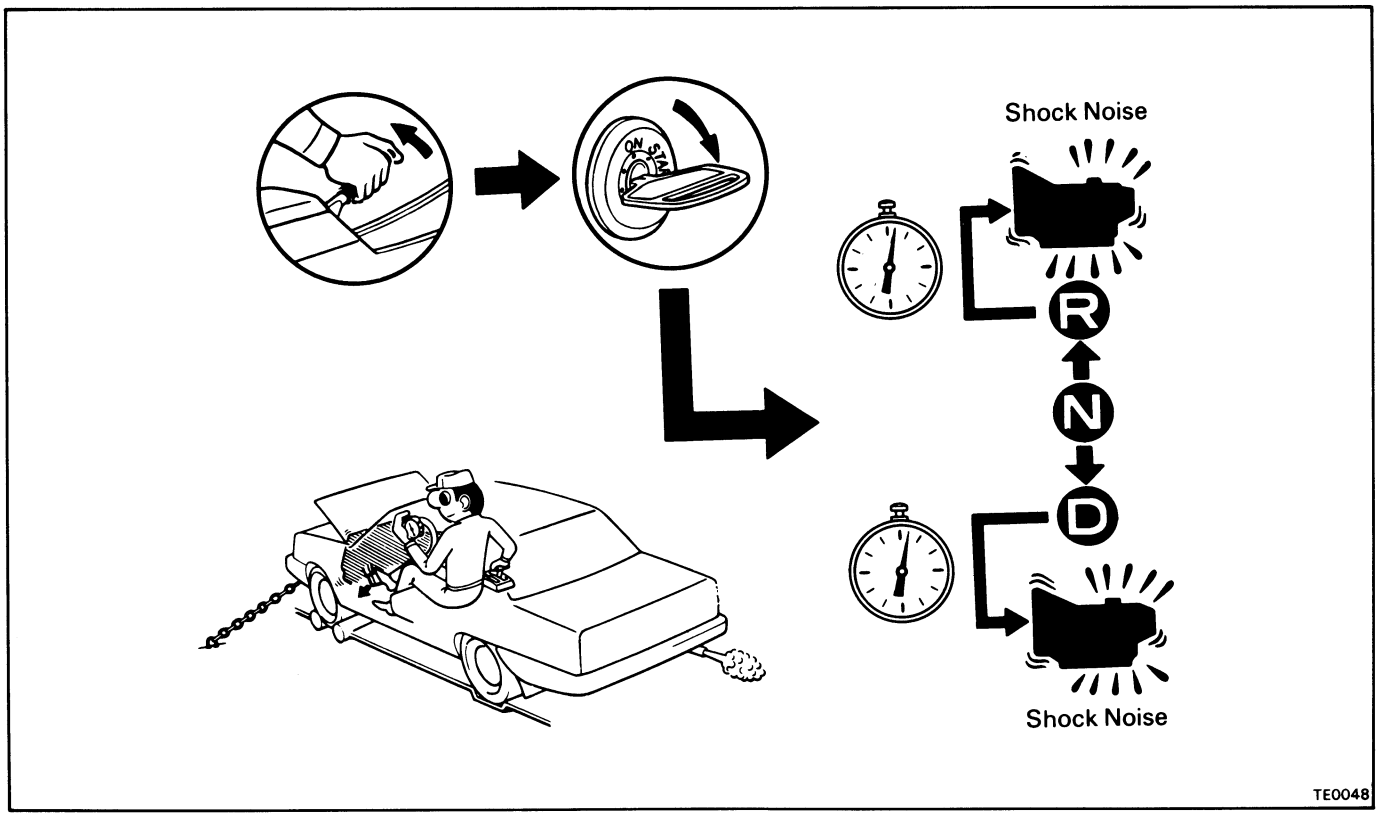

Hydraulic Test

1. PREPARATION

(a) Warm up the transmission fluid.

(b) Remove the transmission case test plug and mount the hydraulic pressure gauge.

SST 09992-00094 Oil pressure gauge

CAUTION:
Perform the test at normal operating fluid temperature (50 — 80°C or 122 — 176°F).

2. MEASURE LINE PRESSURE

(a) Fully apply the parking brake and chock the four wheels.

(b) Start the engine and check the idling rpm.

(c) Shift into D range, step down strongly on the brake pedal with your left foot and while manipulating the accelerator pedal with the right foot, measure the line pressure at the engine speeds specified in table.

(d) In the same manner, perform the test in R range.

(e) If the measured pressures are not up to specified values, recheck the throttle cable adjustment and retest.

EVALUATION

(a) If the measured values at all ranges are higher than specified:
- Throttle cable out of adjustment
- Throttle valve defective
- Regulator valve defective

(b) If the measured values at all ranges are lower than specified:
- Throttle cable out of adjustment
- Throttle valve defective
- Regulator valve defective
- Oil pump defective
- UD one-way clutch not operating properly

(c) If pressure is low in D range only:
- D range circuit fluid leakage
- Forward clutch defective
- UD one-way clutch not operating properly

(d) If pressure is low in R range only:
- R range circuit fluid leakage
- Direct clutch defective
- First and reverse brake defective
- UD one-way clutch not operating properly

ATM/ Engine	Line pressure kg/cm² (psi, kPa)			
	D range		R range	
	Idling	Stall	Idling	Stall
A240E/4A-GE	3.7 - 4.3 (53 - 61, 363 - 422)	9.2 - 10.7 (131 - 152, 902 - 1,049)	5.4 - 7.2 (77 - 102, 530 - 706)	14.4 - 16.8 (205 - 239, 1,412 - 1,648)
A241E/4A-GZE	3.7 - 4.3 (53 - 61, 363 - 422)	9.2 - 10.7 (131 - 152, 902 - 1,049)	6.3 - 8.1 (90 - 115, 618 - 794)	15.9 - 19.3 (226 - 274, 1,559 - 1,893)

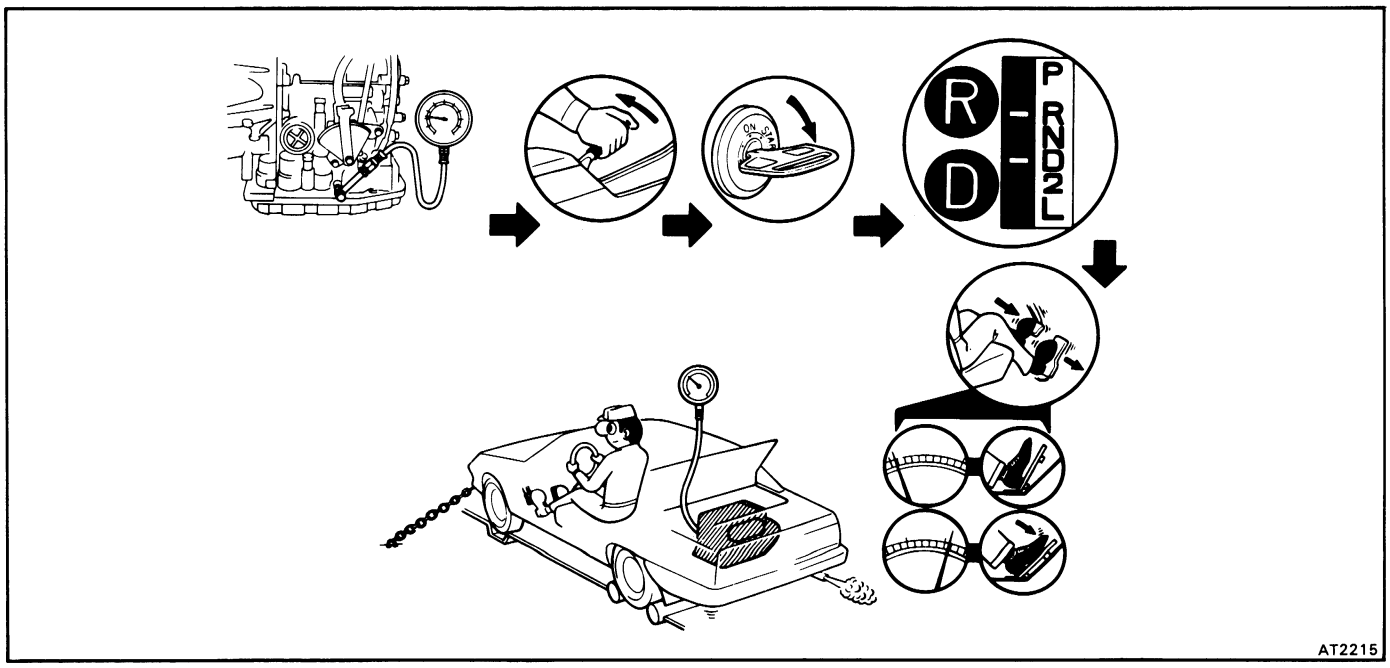

Road Test

CAUTION: Perform the test at normal operating fluid temperature (50 – 80°C or 122 – 176°F).

1. D RANGE TEST IN NORM AND PWR PATTERN RANGES

Shift into the D range and hold the accelerator pedal constant at full throttle valve opening positions. Check the following:

(a) 1-2, 2-3, 3-OD and lock-up up-shifts should take place, and shift points should conform to those shown in the automatic shift schedule.

NOTE:

(1) There is no OD up-shift when coolant temperature is below 50°C (122°F).

(2) There is no lock-up when the vehicle speed is 10 km/h (6 mph) less than the set cruise control speed.

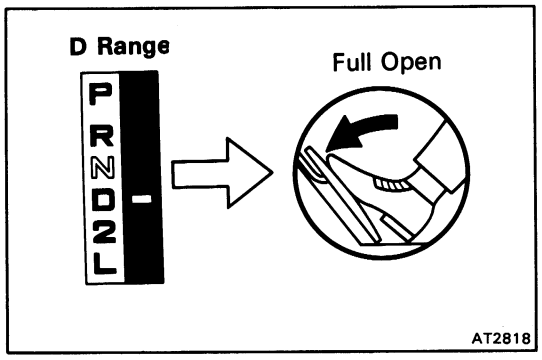

EVALUATION

(1) If there is no 1 → 2 up-shift:
- No. 2 solenoid is stuck
- 1-2 shift valve is stuck

(2) If there is no 2 → 3 up-shift:
- No. 1 solenoid is stuck
- 2-3 shift valve is stuck

(3) If there is no 3 → OD up-shift (throttle valve opening 1/2):
- 3-OD shift valve is stuck

(4) If the shift point is defective:
- Throttle valve, 1-2 shift valve, 2-3 shift valve, 3-OD shift valve ect., are defective.

(5) If the lock-up is defective:
- No. 3 solenoid is stuck
- Lock-up relay valve is stuck

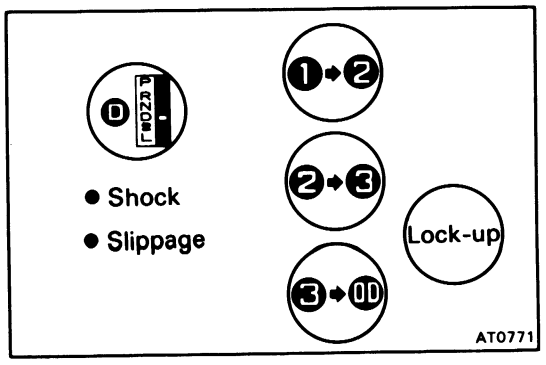

- Shock
- Slippage

(b) In the same manner, check the shock and the slip at 1 → 2, 2 → 3 and 3 → OD up-shifts.

EVALUATION

If the shock is severe:
- Line pressure is too high
- Accumulator is defective
- Check ball is defective

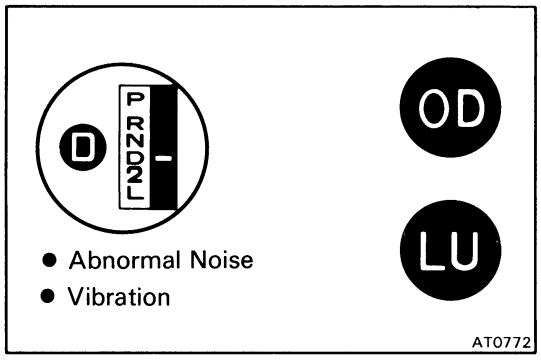

(c) Run in the OD gear of the D range and with the lock-up in operation, and check for abnormal noise and vibration.

NOTE: Check for cause of abnormal noise and vibration must be made with extreme care as they could also be due to unbalance in the drive shaft, differential, tire, torque converter, etc. or insufficient bending rigidity, etc., in the power train.

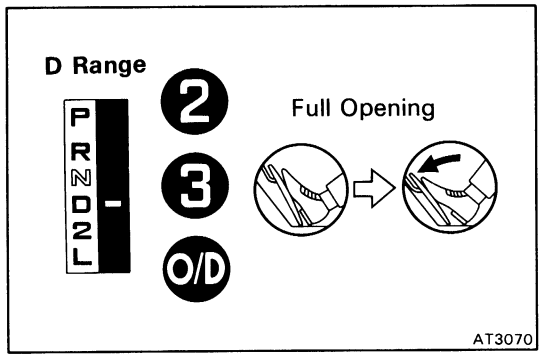

(d) While running in the D range 2nd, 3rd gears and OD, check to see that the possible kick-down vehicle speed limits for 2 → 1, 3 → 2, OD → 3 and OD → 2 kick-downs conform to those indicated on the automatic shift schedule.

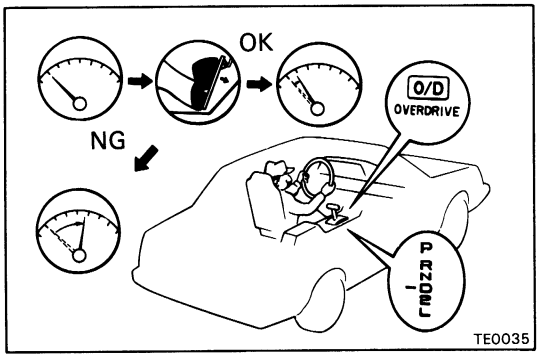

(e) Check for abnormal shock and slip at kick-down.

(f) Check for the lock-up mechanism.

(1) Drive in D range, O/D gear, at a steady speed (lock-up ON) of about 50 km/h (31 mph).

(2) Lighly depress the accelerator pedal and check that the engine rpm does not change abruptly.

If there is a big jump in engine rpm, there is no lock-up.

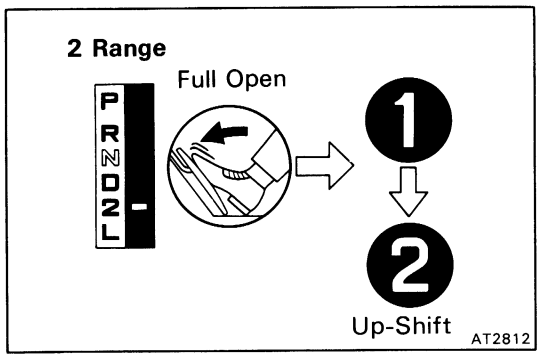

2. 2 RANGE TEST

Shift into the 2 range and while driving with the accelerator pedal held constantly at the full throttle valve opening position, push in one of the pattern selectors, check on the following points.

(a) Check to see that 1 → 2, up-shift takes place and also that the shift points conform to those shown on the automatic shift schedule.

NOTE:

- To prevent overrun, the transmission shifts up into 3rd gear at around 130 km/h (81 mph).
- In range 2, there will be no lock-up to 2nd gear.

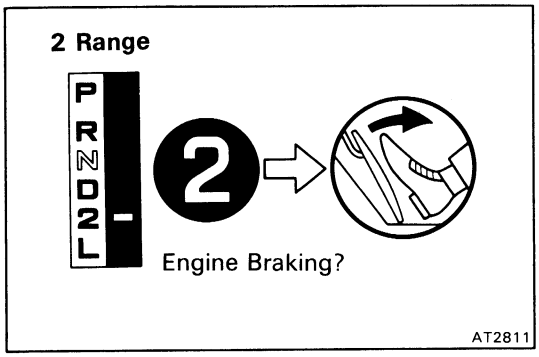

(b) While running in the 2 range, 2nd gear, release the accelerator pedal and check the engine braking effect.

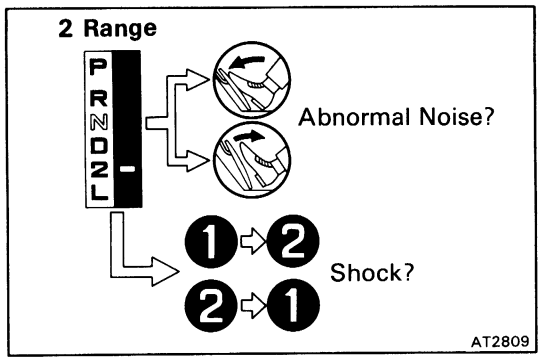

(c) Check for abnormal noise at acceleration and deceleration, and for shock at up-shift and down-shift.

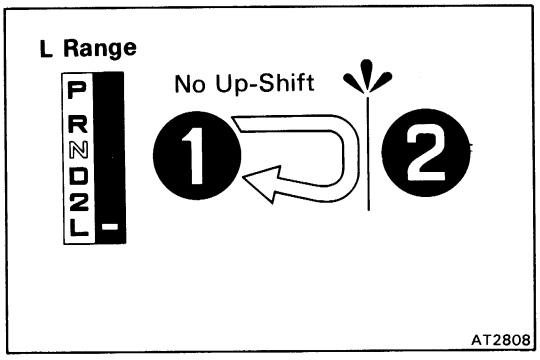

3. L RANGE TEST

(a) While running in the L range, check to see that there is no up-shift to 2nd gear.

NOTE: To prevent overrun, the transmission up-shifts into 2nd gear at around 75 km/h (47 mph).

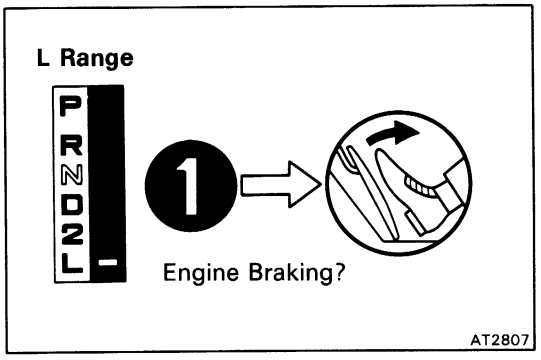

(b) While running in the L range, release the accelerator pedal and check the engine braking effect.

EVALUATION

If there is no engine braking effect:

- First and reverse brake is defective.

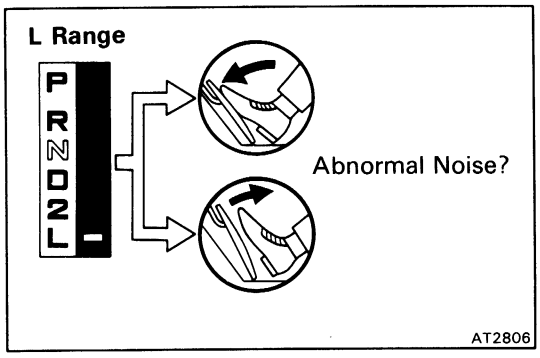

(c) Check for abnormal noise at acceleration and deceleration.

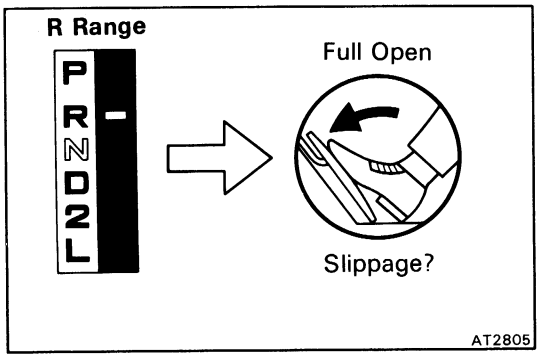

4. R RANGE TEST

Shift into the R range and, while starting at full throttle, check for slipping.

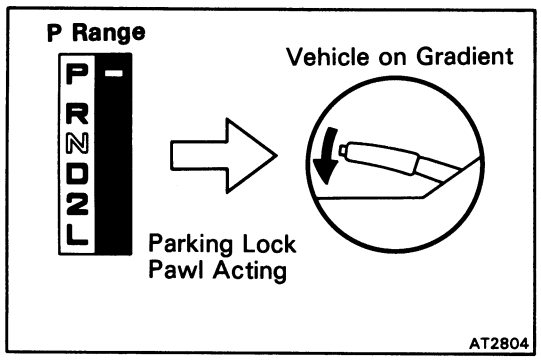

5. P RANGE TEST

Stop the vehicle on a gradient (more than 5°) and after shifting into the P range, release the parking brake. Then check to see that the parking lock pawl holds the vehicle in place.

Electronic Control System

ELECTRONIC CONTROL CIRCUIT

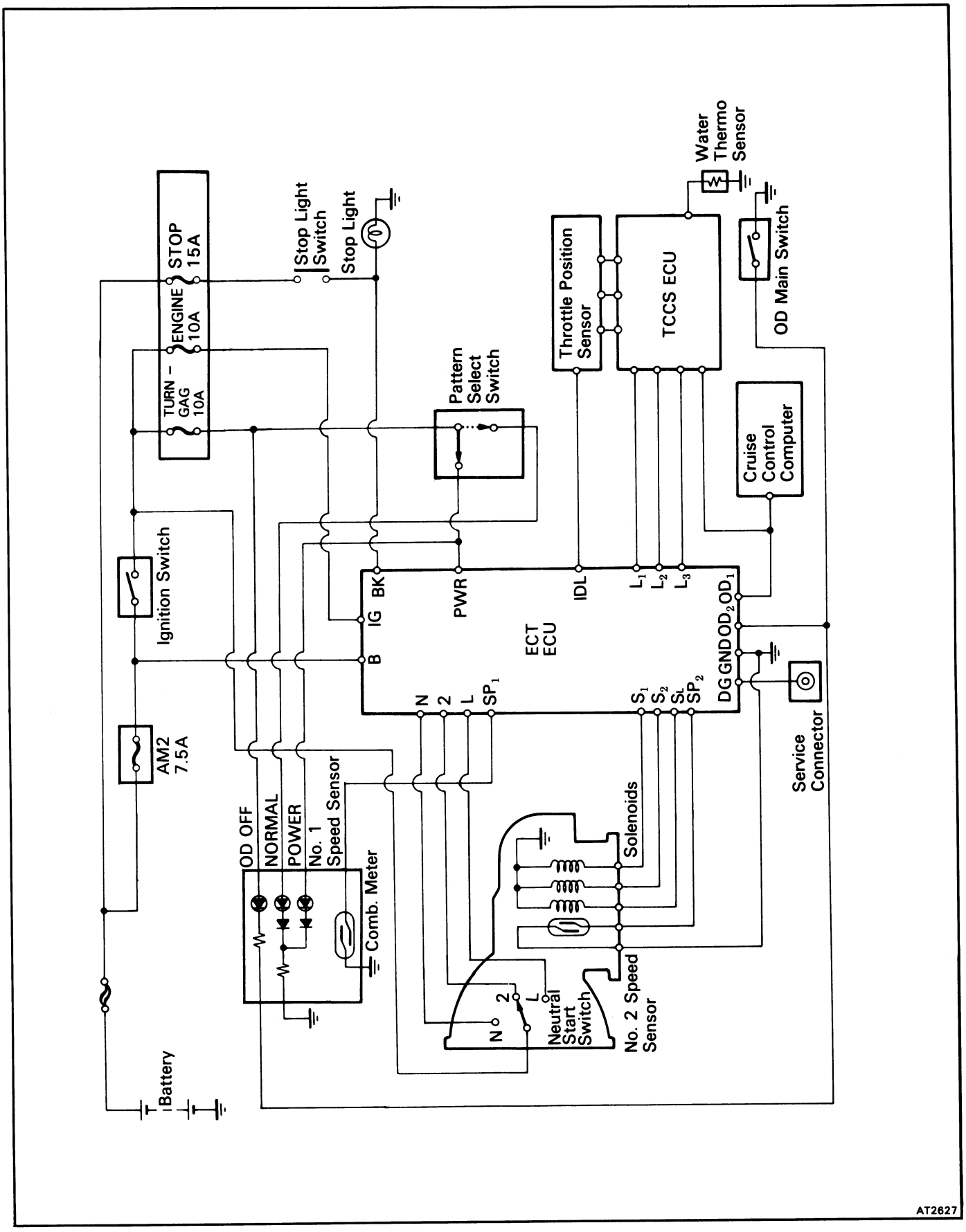

AT2627

ELECTRONIC CONTROL COMPONENTS

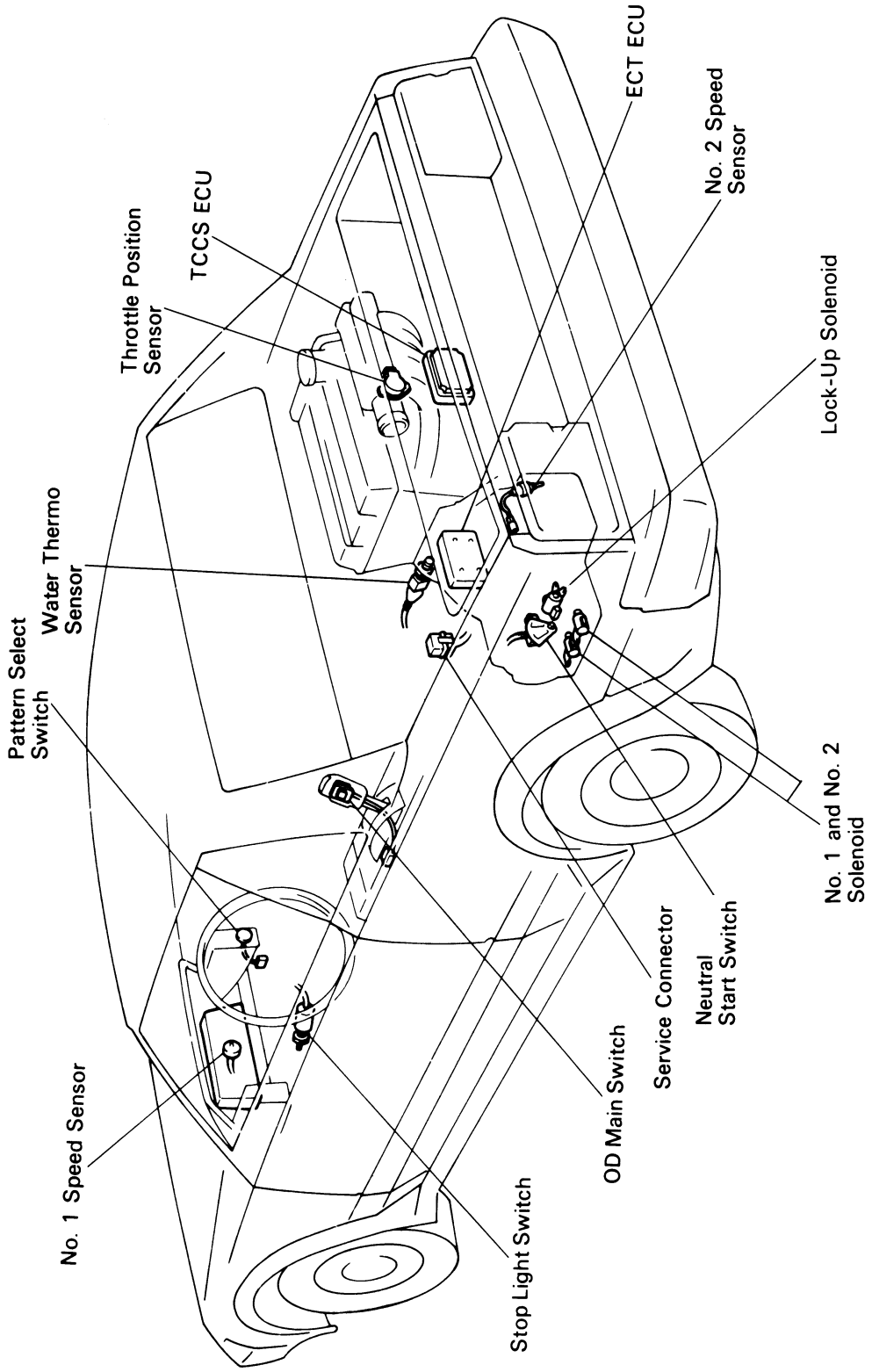

AT2216

TROUBLESHOOTING OF ELECTRONIC CONTROL SYSTEM

NOTE:

- If diagnostic code Nos. 42, 61, 62 or 63 occur, the overdrive indicator light will begin to blink immediately to warn the driver. However, an impact or shock may cause the blinking to stop; but, the code will still be retained in the ECT computer memory until canceled out.
- There is no warning for diagnostic code No. 64.
- In the event of a simultaneous malfunction of both No. 1 and No. 2 speed sensors, no diagnostic code will appear and the fail-safe system will not function. However, when driving in the D range, the transmission will not up-shift from first gear, regardless of the vehicle speed.

Trouble No. 1 Blinking overdrive indicator light (while driving)

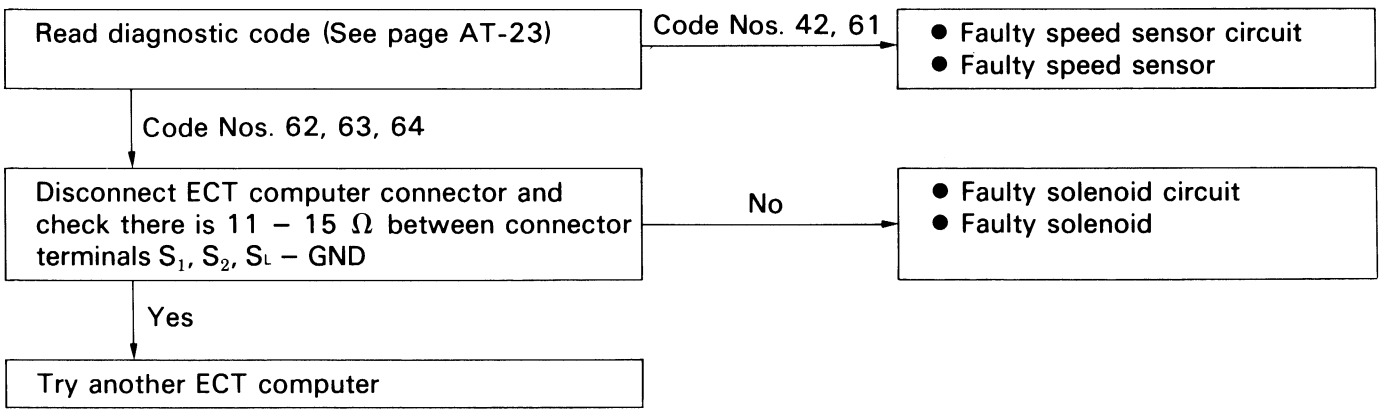

Trouble No. 2 No shifting

Warm up engine
Coolant temp: 80°C (176°F)
ATF temp: 50 – 80°C (122 – 176°F)

↓

Read diagnostic code
(See page AT-23)

→ Malfunction code(s) → Proceed to trouble No. 1 (AT-17)

↓ Normal code

Connect a voltmeter to the service connector terminals ECT and E_1.
Does terminal ECT voltage vary with changes in throttle opening?

Yes ↓

No →

Is voltage between ECT computer terminals BK and GND as follows?
0V: Brake pedal released
12V: Brake pedal depressed

→ No → Brake signal faulty

↓ Yes

- Computer power source and ground faulty
- Throttle position signal faulty
- Terminal ECT wire open or short

Disconnect ECT computer connector and road test. Does the transmission operate in the respective gear when in the following ranges while driving?
D range . . . Overdrive
2 range . . . 3rd gear
L range . . . 1st gear

→ No → Transmission faulty

↓ Yes

Continued on page AT-19

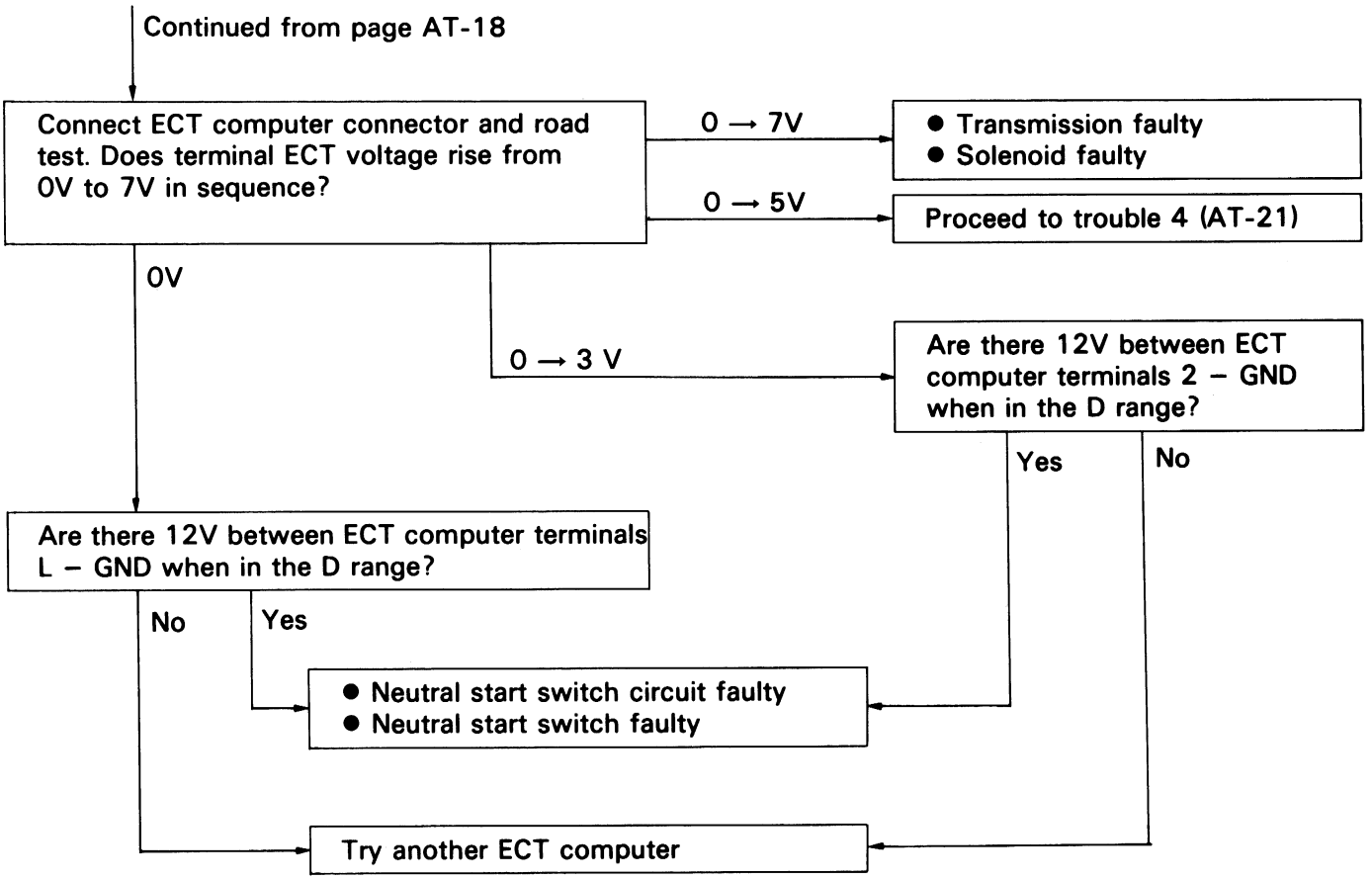
Continued from page AT-18
Connect ECT computer connector and road test. Does terminal ECT voltage rise from 0V to 7V in sequence?
0 → 7V
● Transmission faulty
● Solenoid faulty
0 → 5V
Proceed to trouble 4 (AT-21)
0V
0 → 3 V
Are there 12V between ECT computer terminals 2 – GND when in the D range?
Yes
No
Are there 12V between ECT computer terminals L – GND when in the D range?
No
Yes
● Neutral start switch circuit faulty
● Neutral start switch faulty
Try another ECT computer

Trouble No. 3 Shift point too high or too low

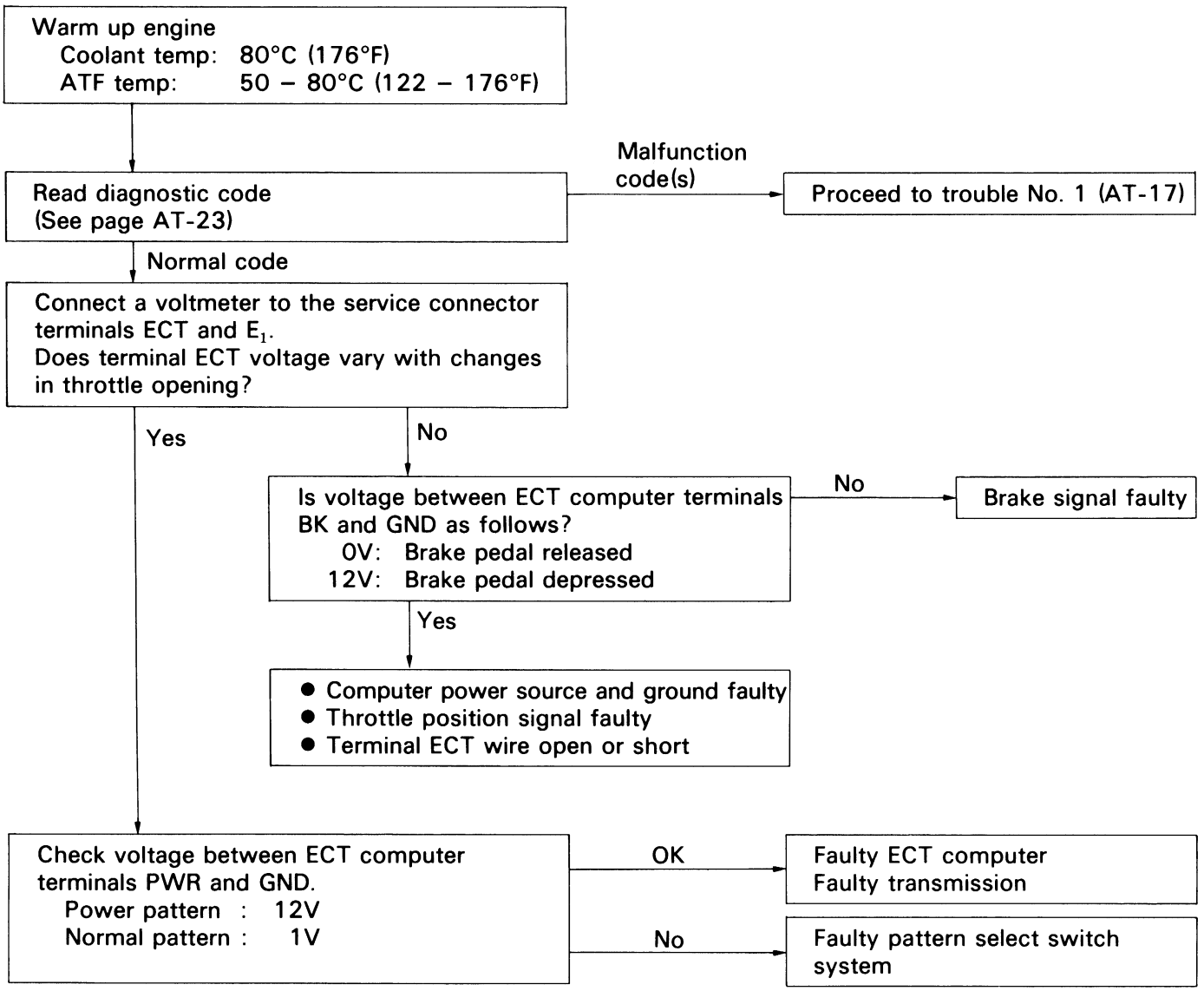

Trouble No. 4 No up-shift to overdrive (After warm-up)

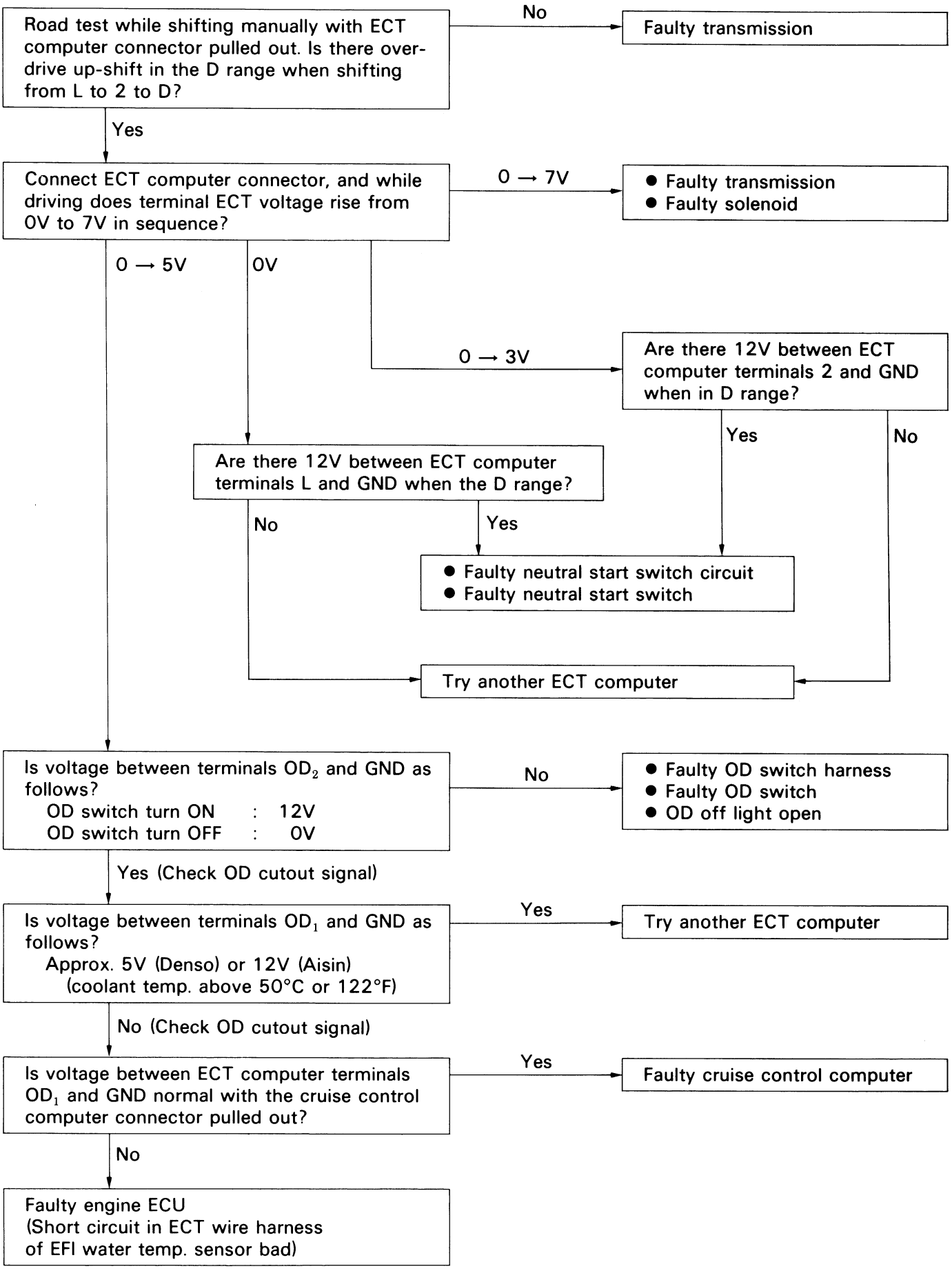

Trouble No. 5 No lock-up (After warm-up)

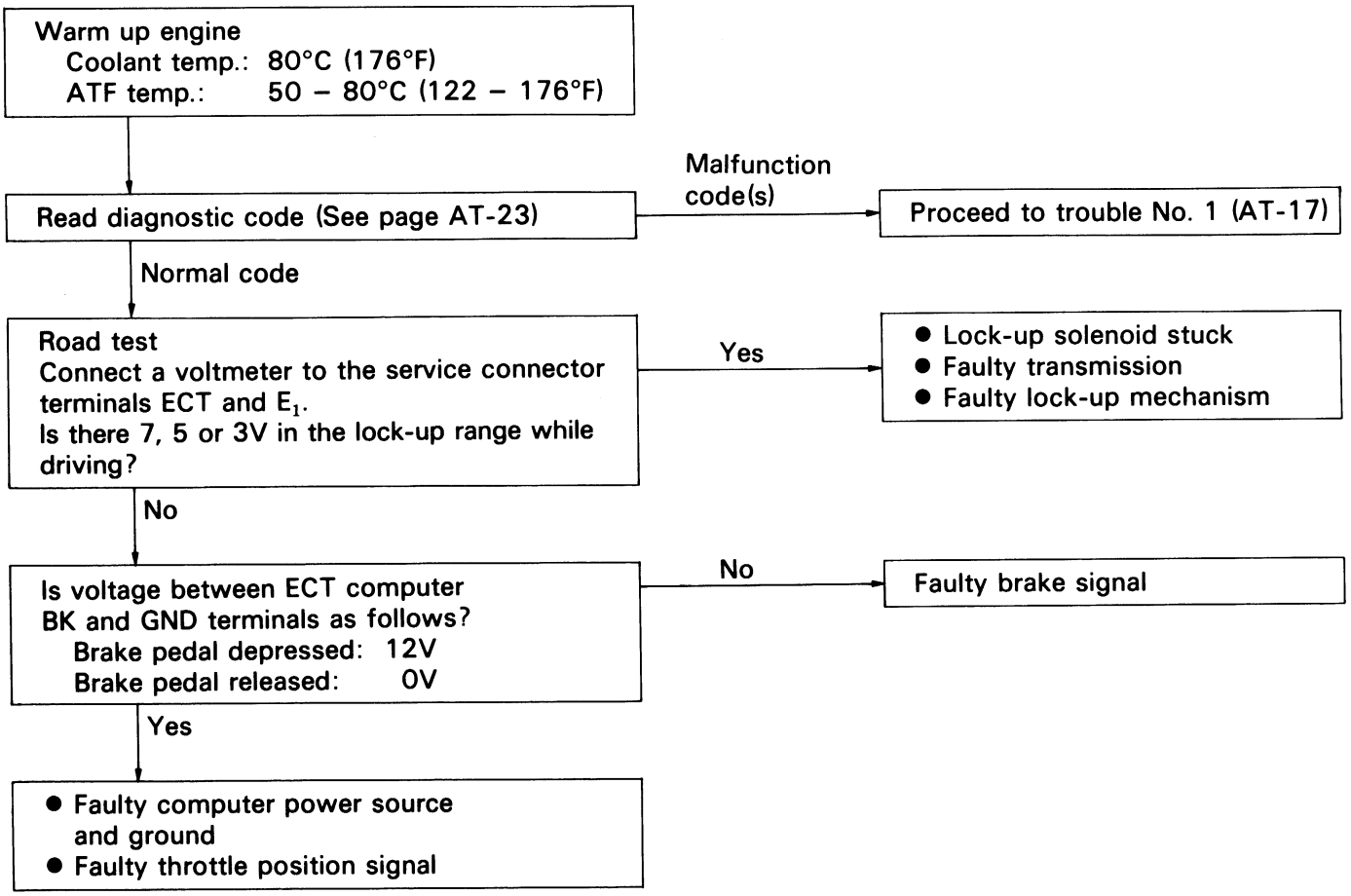

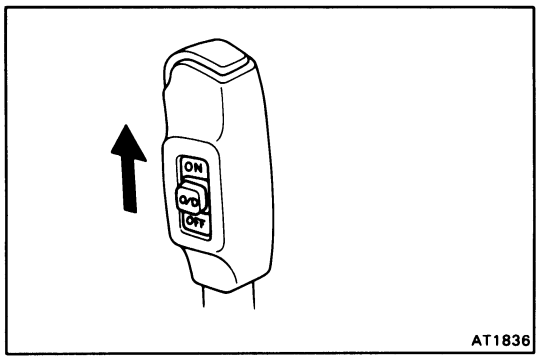

READ OF DIAGNOSTIC CODE

1. TURN IGNITION SWITCH AND OD SWITCH TO ON

Do not start engine.

NOTE: Warning and diagnostic code can be read only when the overdrive switch is ON. If OFF the overdrive light will light continuously and will not blink.

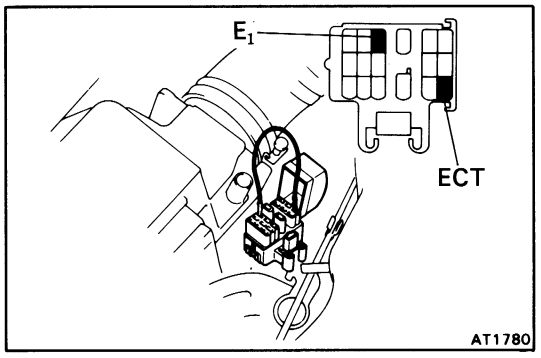

2. SHORT DG TERMINAL CIRCUIT

Using a service wire, short the terminals ECT AND E_1.

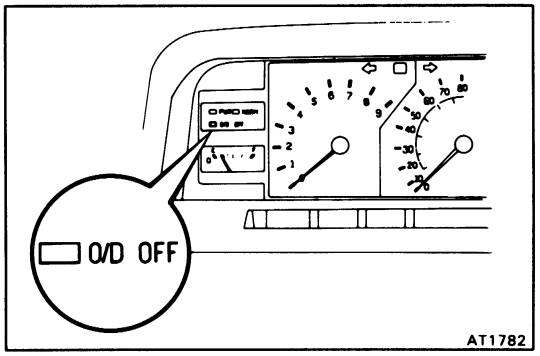

3. READ DIAGNOSTIC CODE

Read the diagnostic code as indicated by the number of times the OD "OFF" light flashes.

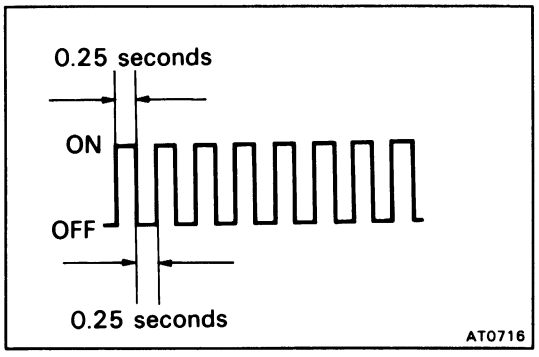

4. DIAGNOSTIC CODE

(a) If the system is operating normally, the light will blink for 0.25 seconds every 0.5 seconds.

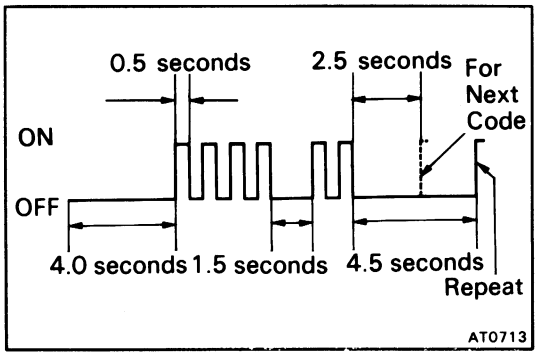

(b) In the event of a malfunction, the light will blink for 0.5 seconds every 1.0 seconds. The number of blinks will equal the first number and, after 1.5 second pause, the second number of the two digit diagnostic code. If there are two or more codes, there will be a 2.5 second pause between each.

NOTE: In the event of several trouble codes occuring simultaneously, indication will begin from the smaller value and continue to the larger.

(c) Remove the service wire from the DG terminal.

Diagnostic Code

Code No.	Light Pattern	Diagnosis System
42		Defective No. 1 speed sensor (in combination meter) – severed wire harness or short circuit
61		Defective No. 2 speed sensor (in ATM) – severed wire harness or short circuit
62		Severed No. 1 solenoid or short circuit – severed wire harness or short circuit
63		Severed No. 2 solenoid or short circuit – severed wire harness or short circuit
64		Severed lock-up solenoid or short circuit – severed wire harness or short circuit

NOTE: If codes 62, 63 and 64 appear, there is an electrical malfunction in the solenoid.
Causes due to mechanical failure, such as a stuck switch, will not appear.

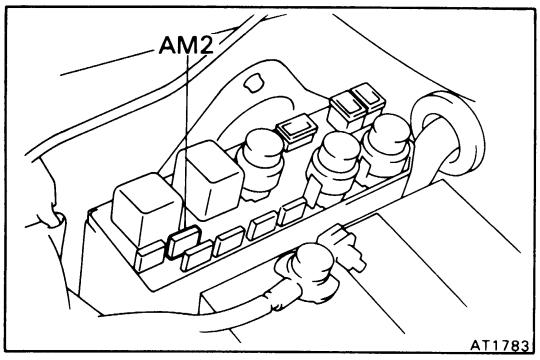

CANCEL OUT DIAGNOSTIC CODE

1. After repair of the trouble area, the diagnostic code retained in memory by the ECT computer must be canceled by removing the fuse AM2 (7.5A) for 10 seconds or more, depending on ambient temperature (the lower the temperature, the longer the fuse must be left out) with the ignition switch off.

   NOTE:
   - Cancellation can also be done by removing the battery negative (–) terminal, but in this case other memory system (clock, radio ETR, etc.) will also be cancelled out.
   - The diagnostic code can also be cancelled out by disconnecting the ECT computer connector.
   - If the diagnostic code is not cancelled out, it will be retained by the ECT computer and appear along with a new code in event of future trouble.

2. After cancellation, perform a road test to confirm that a "normal code" is now read on the OD "OFF" light.

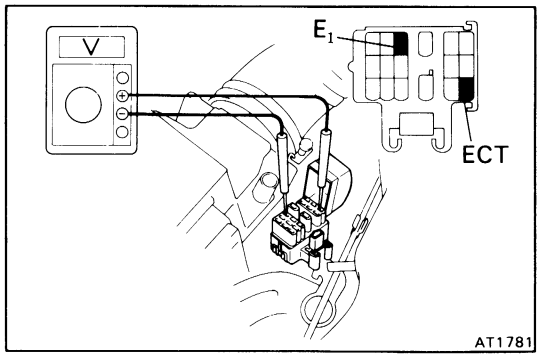

INSPECT TERMINAL ECT VOLTAGE

1. INSPECT THROTTLE POSITION SENSOR SIGNAL

(a) Turn the ignition switch to ON. Do not start the engine.

(b) Connect a voltmeter to the terminals ECT and E_1 of the service connector.

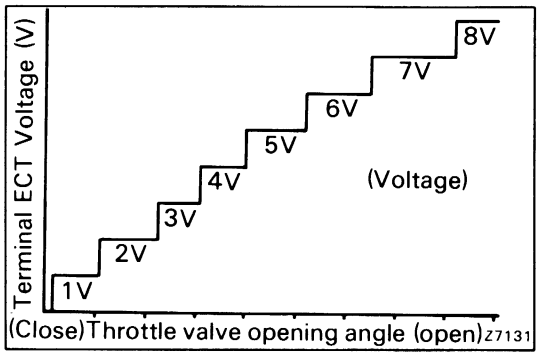

(c) While slowly depressing the accelerator pedal, check that terminal ECT voltage rises in sequence.

If the voltage is in proportion to the throttle opening angle and does not change, there is a malfunction with the throttle position sensor or circuit.

2. INSPECT BRAKE SIGNAL

(a) Depress the accelerator pedal until the terminal ECT indicates 8V.

(b) Depress the brake pedal and check the voltage reading from the terminal ECT.

Brake pedal depressed 0V
Brake pedal released 8V

If not as indicated, there is a malfunction in either the stop light switch or circuit.

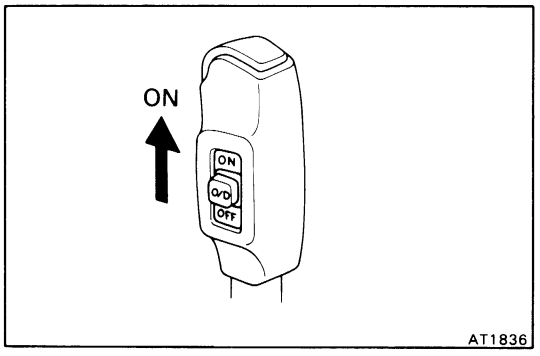

3. INSPECT EACH UP SHIFT POSITION

(a) Warm up the engine.

Coolant temperature: 80°C (176°F)

(b) Turn the OD switch to "ON".

(c) Place the pattern select switch in "Normal" and the shift selector into the D range.

(d) During a road test (above 10 km/h or 6 mph) check that voltage at the terminal ECT is as indicated below for each up-shift position.

(e) If the voltage rises from 0V to 7V in the sequence shown, the control system is okay.

(f) The voltage could rise anywhere between 0V – 8V before the vehicle reaches 10 km/h (6 mph), the voltmeter indicates the current gear.

NOTE: Determine the gear position by a light shock or change in engine rpm when shifting.

Terminal ECT (V)	Gear position
0	1st
2	2nd
3	2nd Lock-up
4	3rd
5	3rd Lock-up
6	OD
7	OD Lock-up

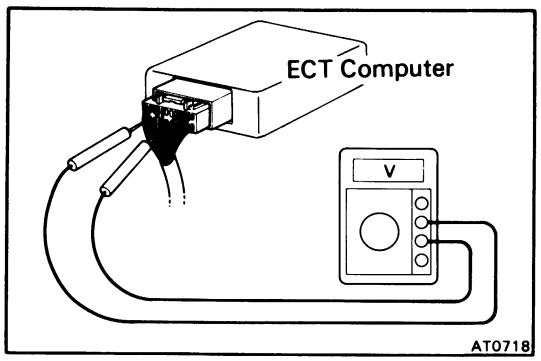

INSPECTION ELECTRONIC CONTROL COMPONENTS

1. INSPECT VOLTAGE OF ECT COMPUTER CONNECTOR

(a) Remove the luggage compartment panel.

(b) Turn on the ignition switch.

(c) Measure the voltage at each terminal.

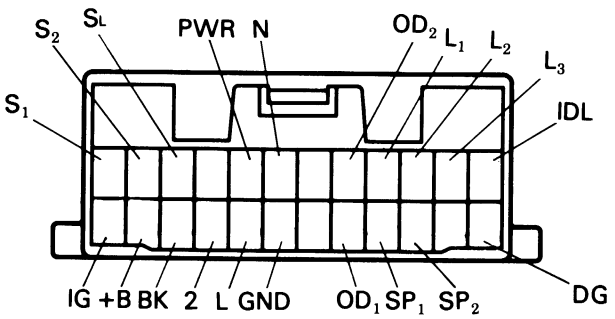

R-24-2

Terminal	Measuring condition	Voltage (V)	
		DENSO type computer	AISIN type computer
L_1 – GND	Throttle valve fully closed	5	10 – 14
	Throttle valve fully closed to fully open	5 to 0	10 – 14 to 0
	Throttle valve fully open	0	←
L_2 – GND	Throttle valve fully closed	5	10 – 14
	Throttle valve fully closed to fully open	5 to 0 to 5	10 – 14 to 0 to 10 – 14
	Throttle valve fully open	5	10 –14
L_3 – GND	Throttle valve fully closed	5	10 –14
	Throttle valve fully closed to fully open	5 to 0 to 5 to 0 to 5	10 –14 to 0 to 10 –14 to 0 to 10–14
	Throttle valve fully open	5	10 –14
IDL – GND	Throttle valve fully closed	0	←
	Throttle valve opening above 1.5°	10 –14	←
SP_1 – GND	Standing still (Cruise control OFF)	5 or 0	←
BK – GND	When brake pedal is depressed	10 – 14	←
	When brake pedal is not depressed	0	←
2 – GND	2 range	10 – 16	←
	Except 2 range	0 – 2	←
L – GND	L range	10 – 16	←
	Except L range	0 – 2	←
N – GND	N range	10 – 16	←
	Except N range	0 – 2	←

Terminal	Measuring condition	Voltage (V)	
		DENSO type computer	AISIN type computer
S_1 – GND	—	10 – 14	←
S_2, S_L – GND	—	0	←
OD_1 – GND	Coolant temp. below 50°C (122°F)	0	←
	Coolant temp. above 50°C (122°F)	5	10 – 14
OD_2 – GND	OD main switch turned ON	5	10 – 14
	OD main switch turned OFF	0	←
IG – GND	Ignition switch ON	10 – 14	←
SP_2 – GND	Standing still	5 or 0	←
PWR – GND	PWR pattern	10 – 14	←
	NORM pattern	0 to 2	←
+B – GND	—	10 – 14	←

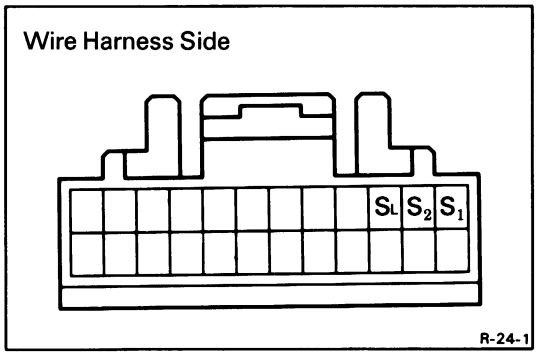

2. INSPECT SOLENOID

(a) Disconnect the connector from the ECT computer.

(b) Measure the resistance between S_1, S_2, S_L and ground.

STD: 11 – 15Ω

(c) Apply battery voltage to the solenoid.
Check that an operation noise can be heard form the solenoid.

NOTE: If there is foreign matter in the solenoid valve, there will be no fluid control even with solenoid operation.

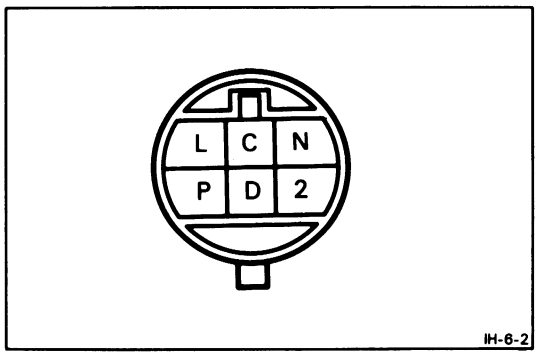

3. INSPECT NEUTRAL START SWITCH

Inspect that there is continuity between terminal L–C, 2–C and N–C.

Shift Position \ Terminal	L	2	N	C
N range			O	O
2 range		O		O
L range	O			O

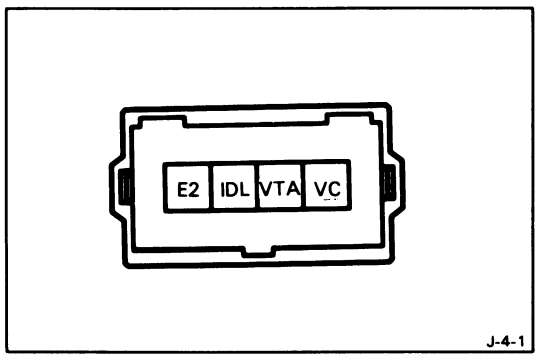

4. INSPECT THROTTLE POSITION SENSOR

Using an ohmmeter, check the resistance between each terminal.

Terminal	Throttle valve condition	Resistance (kΩ)
IDL – E_2	Fully closed	0 – 0.1
	Open	Infinity
Vc – E_2	—	3 – 7
V_{TA} – E_2	Fully closed	0.2 – 0.8
	Fully open	3.3 – 10

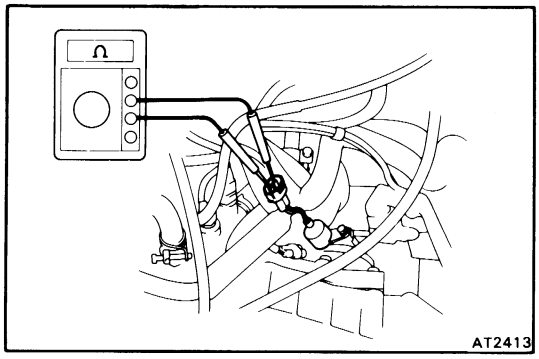

5. INSPECT SPEED SENSOR IN ATM

(a) Jack up a rear wheel on one side.

(b) Connect an ohmmeter between the terminals.

(c) Spin the wheel and check that the meter needle deflects from O to ∞Ω.

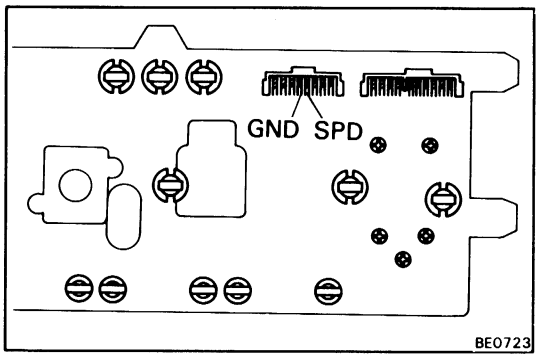

6. INSPECT SPEED SENSOR IN COMBINATION METER

(a) Remove the combination meter.

(b) Connect an ohmmeter between the terminals SPD and GND.

(c) Revolve the meter shaft and check that the meter needle repeatedly deflects from O to ∞Ω.

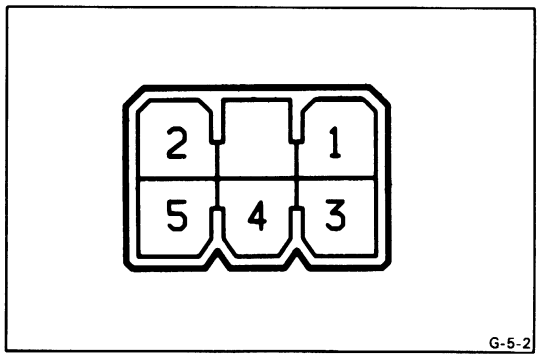

7. INSPECT PATTERN SELECTION SWITCH

Inspect that there is continuity between 5 and each terminal.

NOTE: As there are diodes inside, be careful of the tester probe polarity.

Pattern \ Terminal	5	4	3
NORM	O——	——O	
PWR	O——		——O

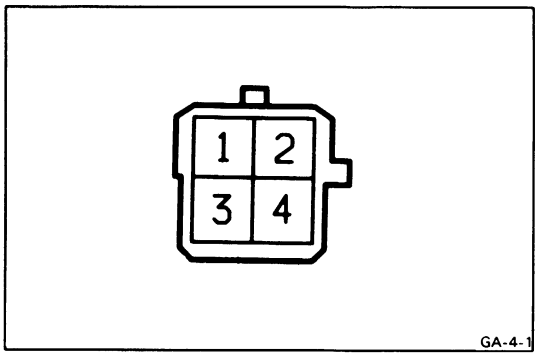

8. INSPECT OD SWITCH

Inspect that there is continuity between terminals 1 and 3.

SW position \ Terminal	1	3
ON		
OFF	O	O

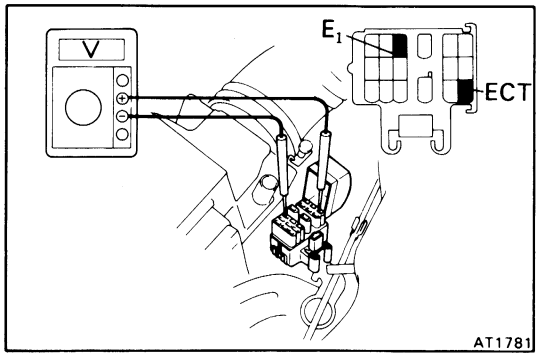

9. INSPECT LOCK-UP MECHANISM

(a) Warm up the Coolant and ATF.

(b) Connect a voltmeter to the service connector terminals ECT and E_1.

(c) Turn the OD switch ON.

(d) Select the normal pattern.

(e) Drive at around 50 km/h (31 mph) to where 7, 5 or 3 volts appears on the voltmeter (this is the lock-up range).

(f) Depress the accelerator pedal and read the tachometer. If there is a big jump in engine rpm there is not lock-up.

10. INSPECT BRAKE SIGNAL

Check that the brake light comes on when the brake pedal is depressed.

OPERATING MECHANISM FOR EACH GEAR

1. TRANSMISSION SYSTEM

○ ..... Operating

Shift lever position	Gear position	C_1	C_2	C_3	B_1	B_2	B_3	B_4	F_1	F_2	F_3
P	Parking							○			
R	Reverse		○				○	○			
N	Neutral							○			
D	1st	○						○		○	○
	2nd	○				○		○	○		○
	3rd	○	○			○		○			○
	OD	○	○	○		○					
2	1st	○						○		○	○
	2nd	○			○	○		○	○		○
	3rd	○	○			○		○			○
L	1st	○					○	○		○	○
	2nd	○			○	○		○	○		○

2. SOLENOID SYSTEM

Possible gear positions in accordance with solenoid operating conditions.

Range	NORMAL			NO. 1 SOLENOID MALFUNCTIONING			NO. 2 SOLENOID MALFUNCTIONING			BOTH SOLENOIDS MALFUNCTIONING		
	Solenoid valve		Gear Position	Solenoid valve		Gear Position	Solenoid valve		Gear Position	Solenoid valve		Gear Position
	No. 1	No. 2		No. 1	No. 2		No. 1	No. 2		No. 1	No. 2	
D range	ON	OFF	1st	x	ON (OFF)	3rd (OD)	ON	x	1st	x	x	OD
	ON	ON	2nd	x	ON	3rd	OFF (ON)	x	OD (1st)	x	x	OD
	OFF	ON	3rd	x	ON	3rd	OFF	x	OD	x	x	OD
	OFF	OFF	OD	x	OFF	OD	OFF	x	OD	x	x	OD
2 range	ON	OFF	1st	x	ON (OFF)	3rd (OD)	ON	x	1st	x	x	3rd
	ON	ON	2nd	x	ON	3rd	OFF (ON)	x	3rd (1st)	x	x	3rd
	OFF	ON	3rd	x	ON	3rd	OFF	x	3rd	x	x	3rd
L range	ON	OFF	1st	x	OFF	1st	ON	x	1st	x	x	1st
	ON	ON	2nd	x	ON	2nd	ON	x	1st	x	x	1st

( ): No fail-safe function x: Malfunctions

AUTOMATIC SHIFT SCHEDULE (A240E/4A-GE)

		Throttle valve fully open [ ] Fully closed km/h (mph)							
		1 → 2	2 → 3	3 → OD	[3 → OD]	[OD → 3]	OD → 3	3 → 2	2 → 1
D range	NORM	48 – 53 (30 – 33)	93 – 101 (58 – 63)	146 – 155 (91 – 96)	31 – 35 (19 – 22)	20 – 24 (12 – 15)	137 – 146 (85 – 91)	87 – 95 (54 – 59)	43 – 47 (27 – 29)
	PWR	60 – 65 (37 – 40)	109 – 117 (68 – 73)	177 – 187 (110 – 116)	47 – 51 (29 – 32)	20 – 24 (12 – 15)	169 – 178 (105 – 111)	103 – 111 (64 – 69)	43 – 47 (27 – 29)
2 range	NORM PWR	60 – 65 (37 – 40)	–	–	–	–	–	–	43 – 47 (27 – 29)
L range	NORM PWR	–	–	–	–	–	–	–	50 – 54 (31 – 34)

		Throttle valve opening 5% km/h (mph)					
		Lock-up ON			Lock-up OFF		
		2nd	3rd	OD	2nd	3rd	OD
D range	NORM	–	*64 – 69 (40 – 43)	67 – 72 (42 – 45)	–	*50 – 54 (31 – 34)	61 – 66 (38 – 41)
	PWR	–	*83 – 91 (52 – 57)	78 – 83 (48 – 52)	–	*73 – 78 (45 – 48)	66 – 70 (41 – 44)

* O/D main switch OFF

NOTE:

(1) There is no lock-up in the 2 and L ranges.

(2) In the following cases, the lock-up will be released regardless of the lock-up pattern.

- When the throttle is completely closed.
- When the brake light switch is ON.

AUTOMATIC SHIFT SCHEDULE (A241E/4A-GZE)

		Throttle valve fully open [ ] Fully closed km/h (mph)							
		1 → 2	2 → 3	3 → OD	[3 → OD]	[OD → 3]	OD → 3	3 → 2	2 → 1
D range	NORM	46 – 50 (29 – 31)	88 – 96 (55 – 60)	132 – 140 (82 – 87)	30 – 35 (19 – 22)	19 – 23 (12 – 14)	126 – 134 (78 – 83)	82 – 90 (51 – 56)	42 – 46 (26 – 29)
	PWR	51 – 56 (32 – 35)	95 – 103 (59 – 64)	150 – 159 (93 – 99)	40 – 46 (25 – 29)	19 – 23 (12 – 14)	143 – 152 (89 – 94)	89 – 97 (55 – 60)	42 – 46 (26 – 29)
2 range	NORM PWR	51 – 56 (32 – 35)	—	—	—	—	—	—	42 – 46 (26 – 29)
L range	NORM PWR	—	—	—	—	—	—	—	46 – 50 (29 – 31)

		Throttle valve opening 5% km/h (mph)					
		Lock-up ON			Lock-up OFF		
		2nd	3rd	OD	2nd	3rd	OD
D range	NORM	—	*66 – 70 (41 – 43)	54 – 59 (34 – 37)	—	*60 – 65 (37 – 40)	51 – 56 (32 – 35)
	PWR	—	*103 – 112 (64 – 70)	81 – 89 (50 – 55)	—	*95 – 103 (59 – 64)	77 – 82 (48 – 51)

* O/D main switch OFF

NOTE:

(1) There is no lock-up in the 2 and L ranges.

(2) In the following cases, the lock-up will be released regardless of the lock-up pattern.

- When the throttle is completely closed.
- When the brake light switch is ON.

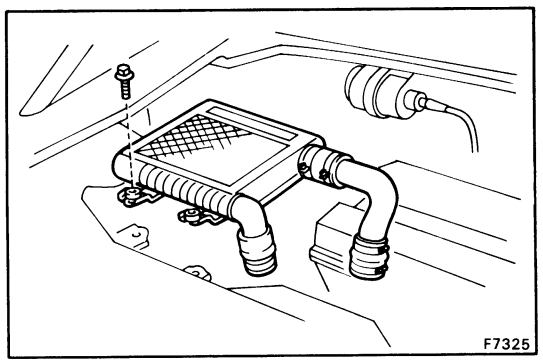

ON-VEHICLE REPAIR

REMOVAL OF SPEED SENSOR

1. **(A241E/4A-GZE)**
   REMOVE INTERCOOLER

   Disconnect the two hose clamps, and remove the four bolts and intercooler.

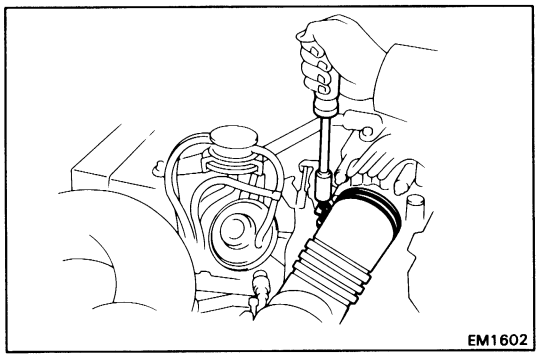

2. **REMOVE AIR FLOW METER AND AIR CLEANER HOSE**
3. **DISCONNECT SPEED SENSOR CONNECTOR**

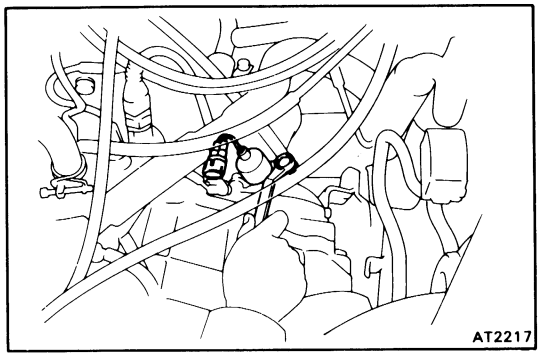

4. **REMOVE RETAINING PLATE**
5. **REMOVE SPEED SENSOR AND O-RING**

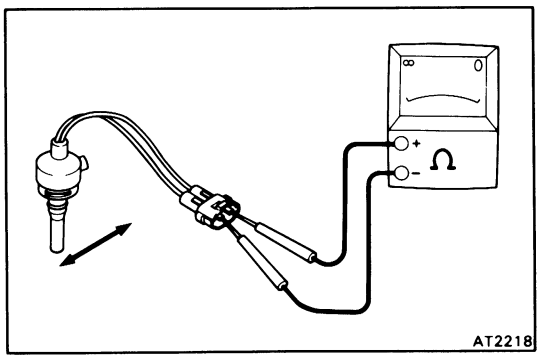

INSPECTION OF SPEED SENSOR

INSPECT SPEED SENSOR

(a) Connect an ohmmeter between the terminals.

(b) Bring a magnet close to then away from the sensor tip and check that the meter needle deflects from $0\,\Omega$ to $\infty\,\Omega$.

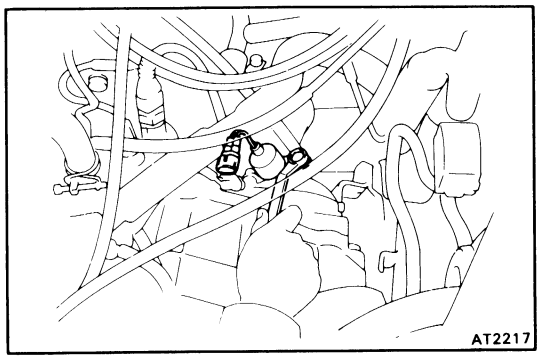

INSTALLATION OF SPEED SENSOR

1. **INSTALL AND COAT NEW O-RING WITH ATF**
2. **INSTALL SPEED SENSOR**
3. **INSTALL RETAINING PLATE**
4. **CONNECT SPEED SENSOR CONNECTOR**

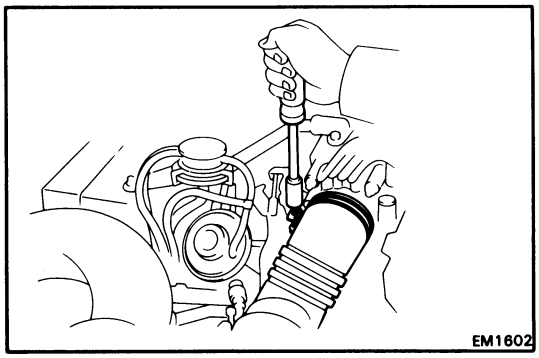

5. INSTALL AIR FLOW METER AND AIR CLEANER HOSE

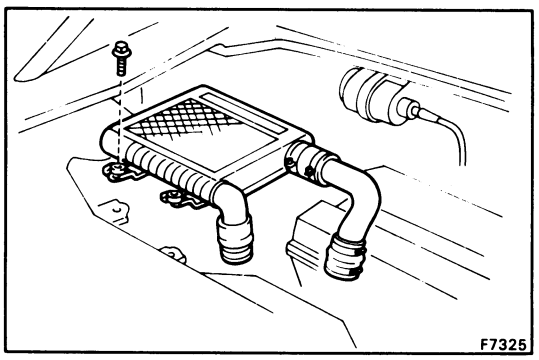

6. (A241E/4A-GZE)
INSTALL INTERCOOLER

Connect the two hose clamps, and install the four bolts and intercooler.

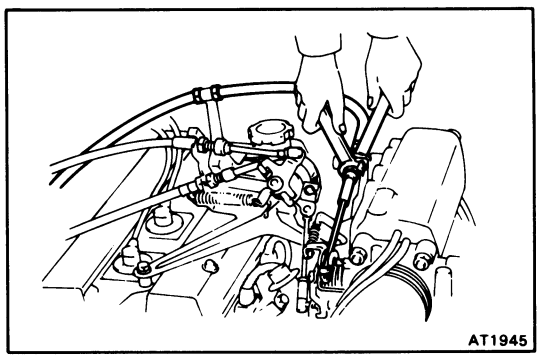

REMOVAL OF THROTTLE CABLE

1. DISCONNECT THROTTLE CABLE

(a) Disconnect the cable housing from the bracket.

(b) Disconnect the cable from the throttle linkage.

(c) Disconnect the cable from the clamps.

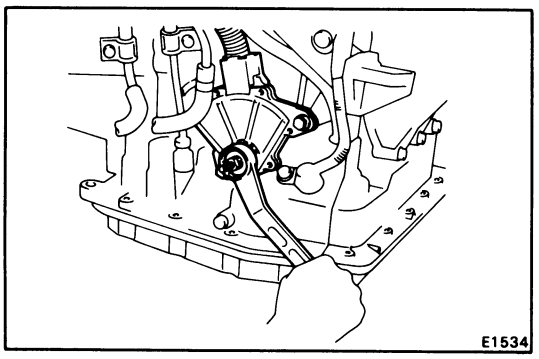

2. REMOVE NEUTRAL START SWITCH

(a) Remove the clips, and disconnect the transmission control cable from manual shift lever.

(b) Remove the manual shift lever.

(c) Remove the neutral start switch.

3. REMOVE VALVE BODY (See page AT-36)

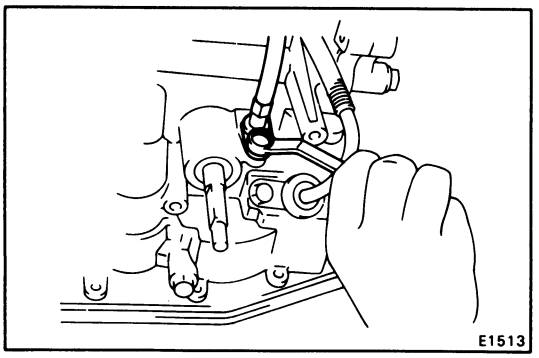

4. PULL THROTTLE CABLE OUT OF TRANSMISSION CASE

(a) Remove the bolt and retaining plate.

(b) Pull the cable out of the transmission case.

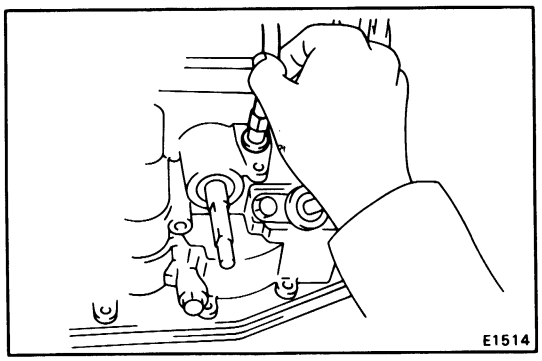

INSTALLATION OF THROTTLE CABLE

1. INSTALL CABLE IN TRANSMISSION CASE

(a) Be sure to push it in all the way.

(b) Install the retaining plate and one bolt.

2. INSTALL VALVE BODY (See page AT-37)

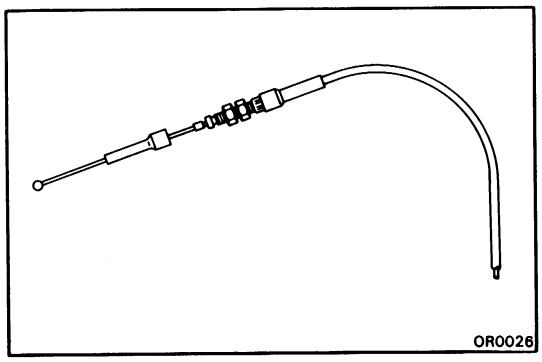

3. IF THROTTLE CABLE IS NEW, STAKE STOPPER TO INNER CABLE

(a) Bend the cable so there is radius of about 200 mm (7.87 in.).

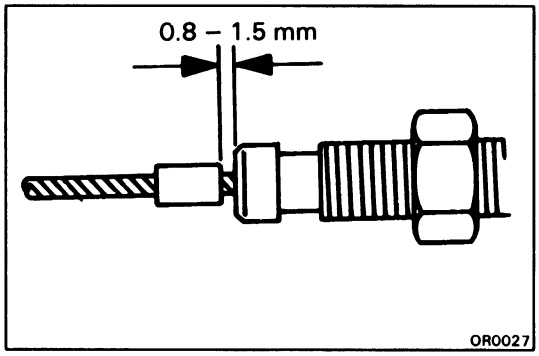

(b) Pull the inner cable lightly until a slight resistance is felt, and hold it.

(c) Stake the stopper 0.8 – 1.5 mm (0.031 – 0.059 in.) from the outer cable as shown.

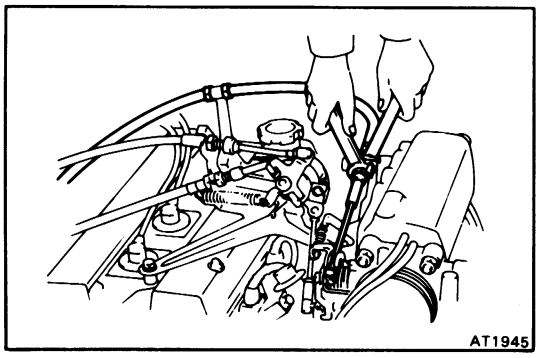

4. CONNECT THROTTLE CABLE

(a) Connect the cable to the throttle linkage.

(b) Connect the cable housing to the bracket.

(c) Connect the cable to the clamps.

5. ADJUST THROTTLE CABLE (See page AT-6)

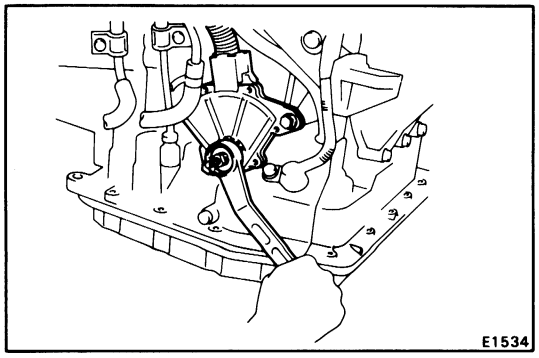

6. INSTALL NEUTRAL START SWITCH

(a) Install the neutral start switch.

(b) Install the manual shift lever.

(c) Adjust the neutral start switch. (See page AT-6)

(d) Connect the transmission control cable.

7. TEST DRIVE VEHICLE

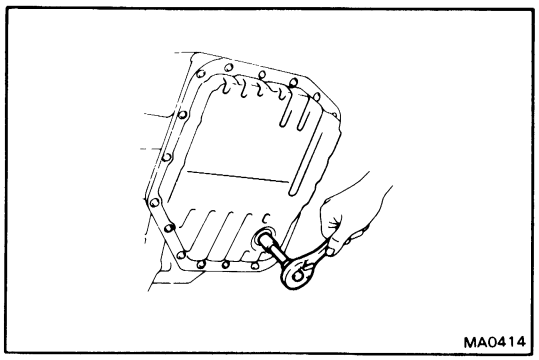

REMOVAL OF VALVE BODY

1. CLEAN TRANSMISSION EXTERIOR

To help prevent contamination, clean the exterior of the transmission.

2. DRAIN TRANSMISSION FLUID

Remove the drain plug and drain the fluid into a suitable container.

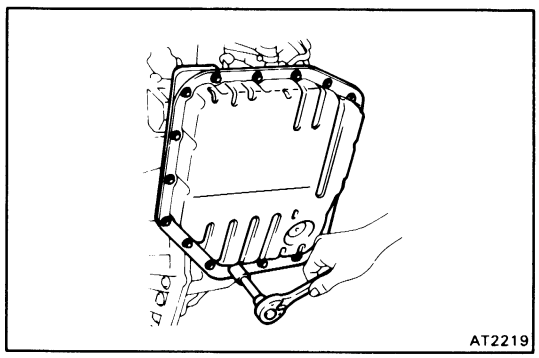

3. REMOVE OIL PAN, AND GASKET

CAUTION: Some fluid will remain in the oil pan.

Remove all pan bolts, and carefully remove the pan assembly. Discard the gasket.

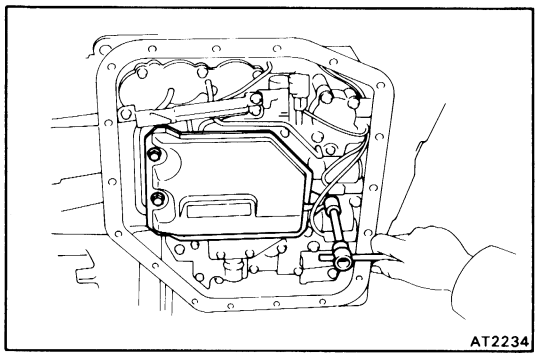

4. REMOVE OIL STRAINER

Remove the three bolts, and the oil strainer.

CAUTION: Be careful as some oil will come out with the filter.

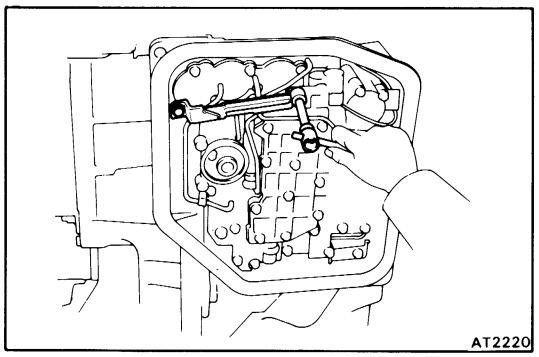

5. REMOVE APPLY TUBE BRACKET

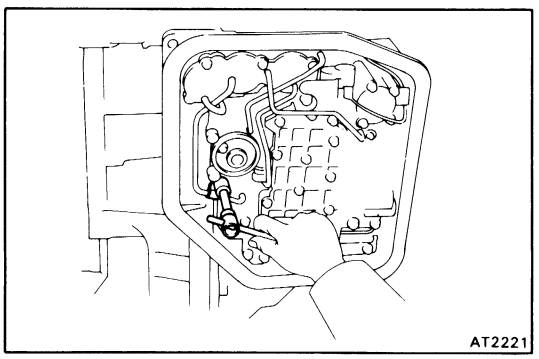

6. REMOVE TUBE CLAMP

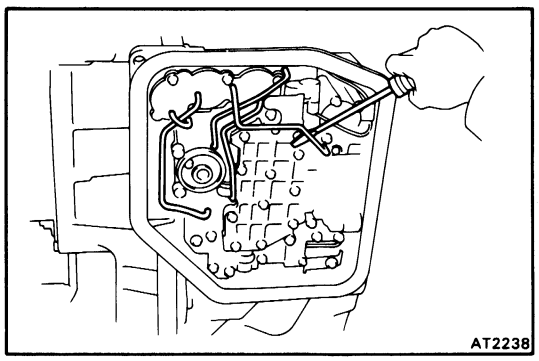

7. REMOVE OIL TUBES

Pry up both tube ends with a large screwdriver and remove the five tubes.

8. DISCONNECT SOLENOID CONNECTORS

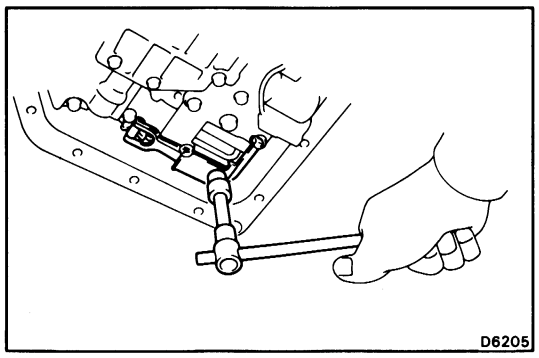

9. REMOVE MANUAL DETENT SPRING

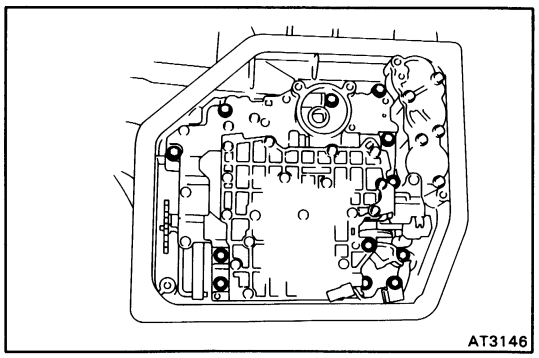

10. REMOVE VALVE BODY

(a) Remove the twelve bolts.

(b) Disconnect the throttle cable from the cam.

(c) Disconnect the manual valve connecting rod and remove the valve body.

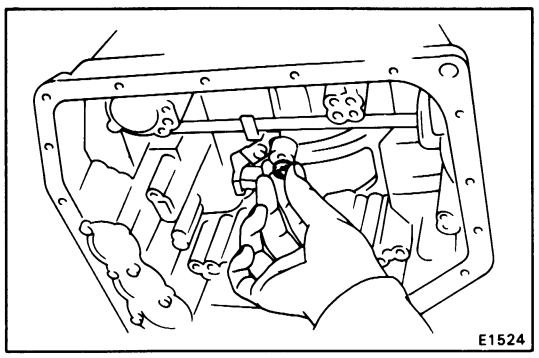

11. REMOVE SECOND BRAKE APPLY GASKET

DISASSEMBLY OF VALVE BODY

(See page AT-92)

INSTALLATION OF VALVE BODY

1. INSTALL SECOND BRAKE APPLY GASKET

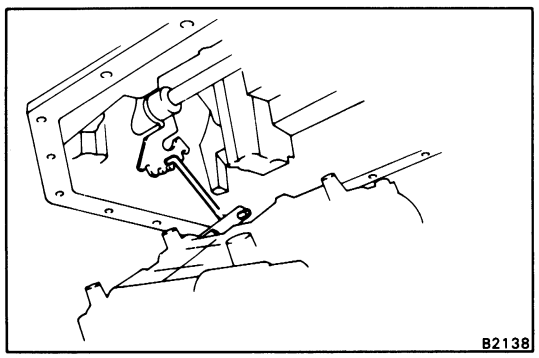

2. PLACE VALVE BODY ON TRANSMISSION

(a) Connect the manual valve connecting rod.

(b) While holding the cam down with your hand, slip the cable end into the slot.

(c) Bring valve body into place.

CAUTION: Be careful not to entangle the solenoid wire.

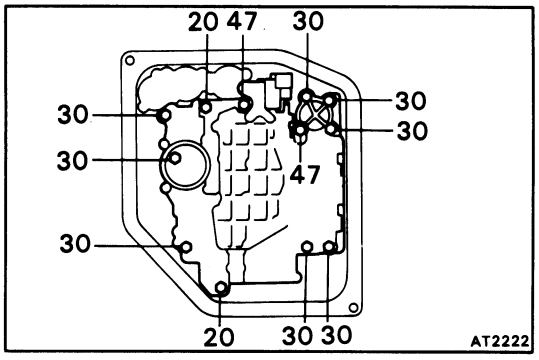

3. INSTALL BOLTS IN VALVE BODY

NOTE: Each bolt length (mm) is indicated in the figure.

Finger tighten the all bolts first. Then tighten them with a torque wrench.

Torque: 100 kg-cm (7 ft-lb, 10 N·m)

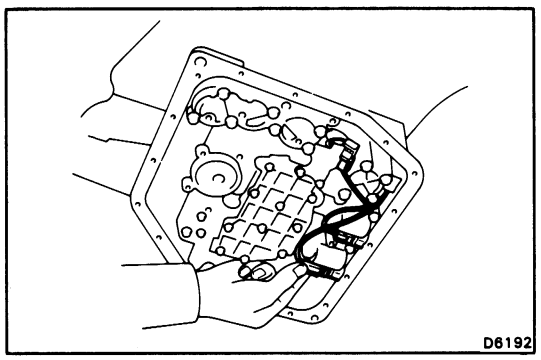

4. CONNECT SOLENOID WIRING

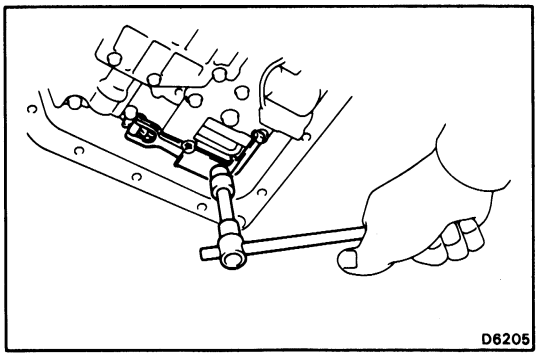

5. INSTALL DETENT SPRING

(a) Finger tighten the bolt first. Then tighten it.

Torque: 100 kg-cm (7 ft-lb, 10 N·m)

(b) Check that the manual valve lever is in contact with the center of the roller at the tip of the detent spring.

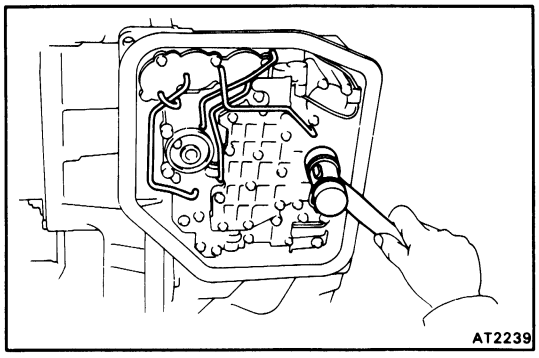

6. INSTALL OIL TUBES

Tap the tubes into the positions indicated in the figure with a plastic hammer.

CAUTION: Be careful not to bend or damage the tubes.

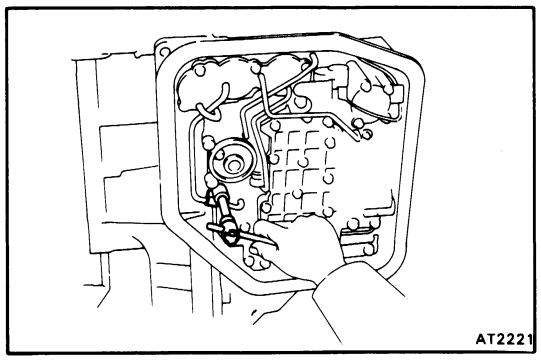

7. INSTALL TUBE CLAMP

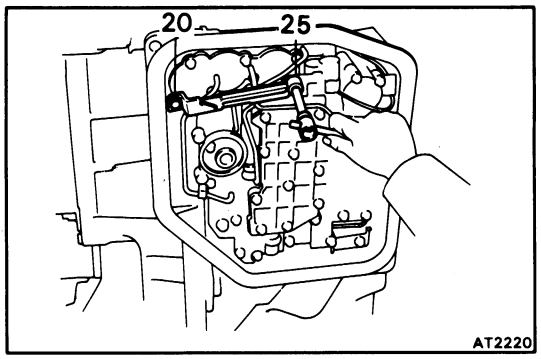

8. INSTALL APPLY TUBE BRACKET

Each bolt length (mm) is indicated in the figure.

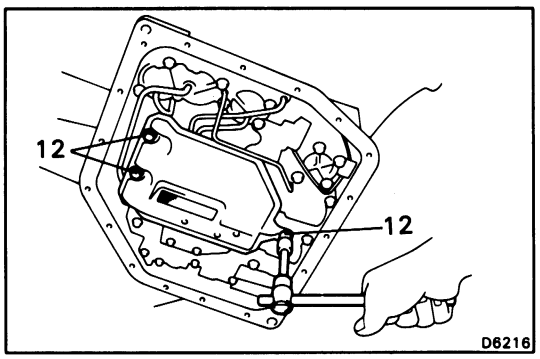

9. INSTALL OIL STRAINER

Each bolt length (mm) is indicated in the figure.

Torque: 100 kg-cm (7 ft-lb, 10 N·m)

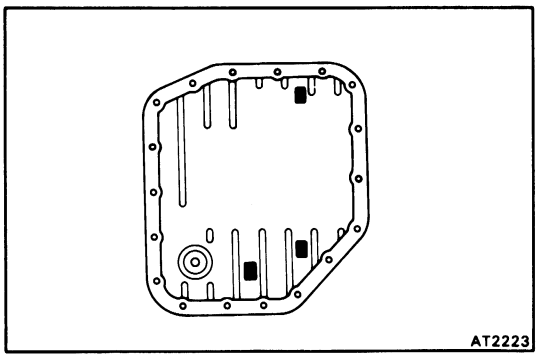

10. INSTALL MAGNETS IN PAN AND INSTALL OIL PAN WITH NEW GASKET

CAUTION: Make sure that the magnets do not interfere with the oil tubes.

Torque: 50 kg-cm (43 in.-lb, 4.9 N·m)

11. INSTALL DRAIN PLUG WITH NEW GASKET

SST 09043-38100

Torque: 175 kg-cm (13 ft-lb, 17 N·m)

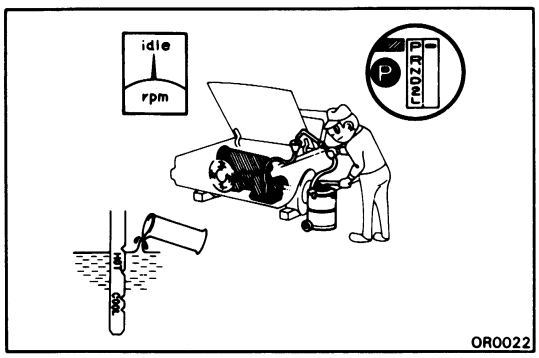

12. FILL TRANSMISSION WITH ATF

Add only about two liters of ATF.

CAUTION: Do not overfill.

Fluid type: ATF DEXRON® II

13. CHECK FLUID LEVEL (See page AT-5)

REMOVAL OF TRANSAXLE

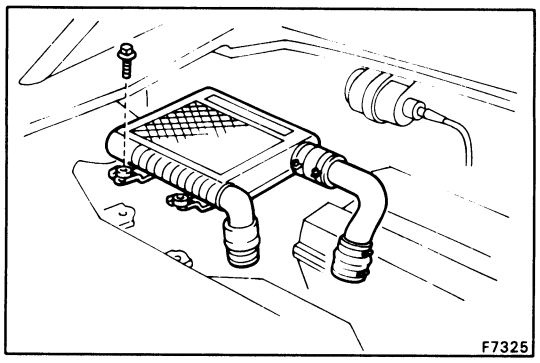

1. **(A241E/4A-GZE)**
   REMOVE INTERCOOLER

   Disconnect the two hose clamps, and remove the four bolts and intercooler.

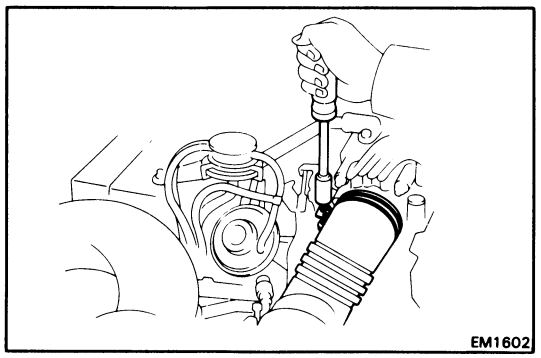

2. **DISCONNECT NEGATIVE BATTERY TERMINAL**

3. **REMOVE AIR FLOW METER AND AIR CLEANER HOSE**

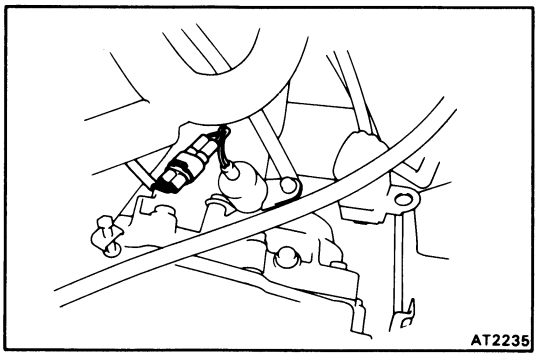

4. **DISCONNECT SPEED SENSOR CONNECTOR**

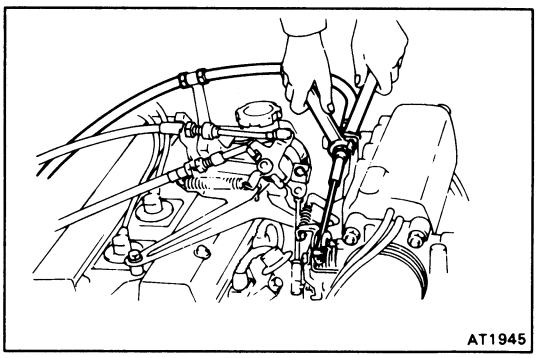

5. **DISCONNECT THROTTLE CABLE FROM THROTTLE LINKAGE AND BRACKET**

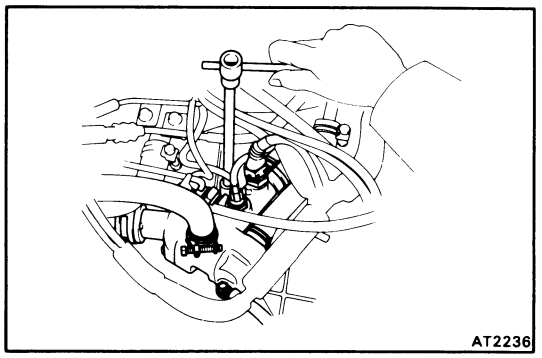

6. **REMOVE WATER INLET SET BOLTS AND DISCONNECT GROUND STRAP**

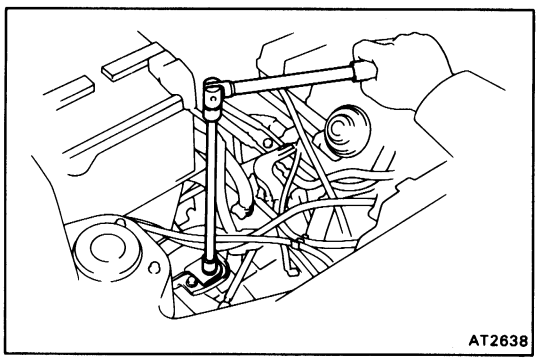

7. REMOVE TRANSMISSION MOUNTING SET BOLT

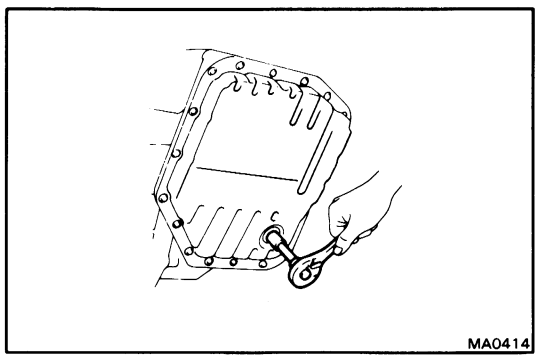

8. RAISE VEHICLE AND DRAIN TRANSAXLE

9. REMOVE REAR LH WHEEL

10. REMOVE ENGINE UNDER COVER

11. DISCONNECT SPEEDOMETER CABLE

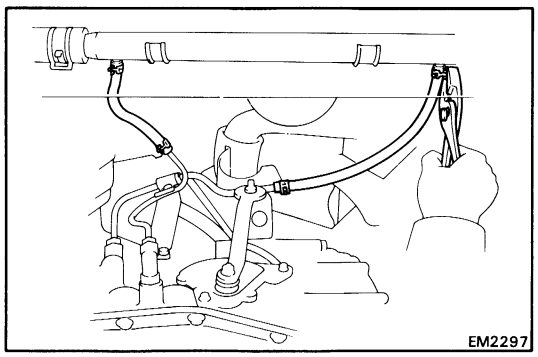

12. DISCONNECT OIL COOLER HOSES

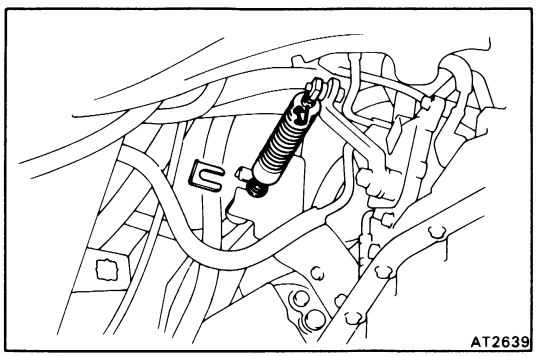

13. DISCONNECT CONTROL CABLE

(a) Remove the clip.

(b) Remove the retainer.

(c) Disconnect the control cable.

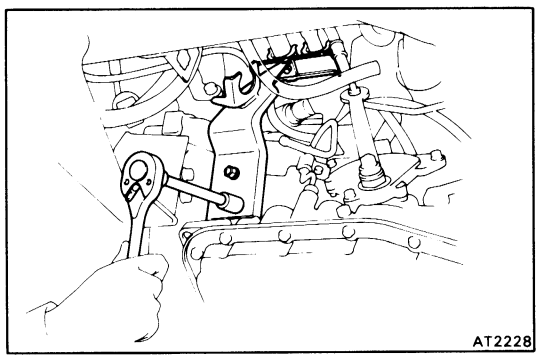

14. REMOVE CONTROL CABLE BRACKET

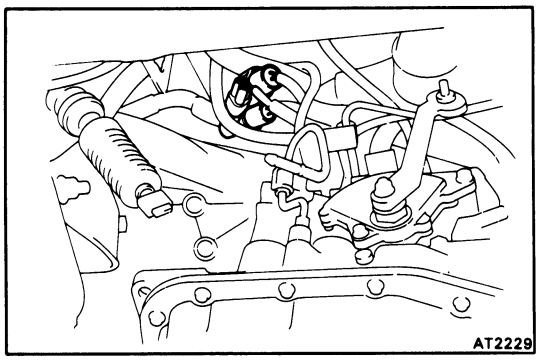

15. DISCONNECT THE THREE CONNECTORS

Disconnect the two neutral start switch connectors and the solenoid connector.

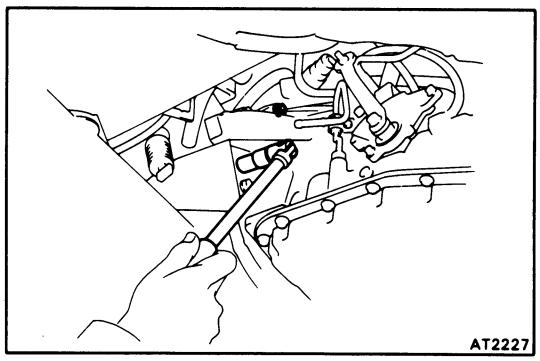

16. REMOVE STARTER MOTOR SET BOLTS

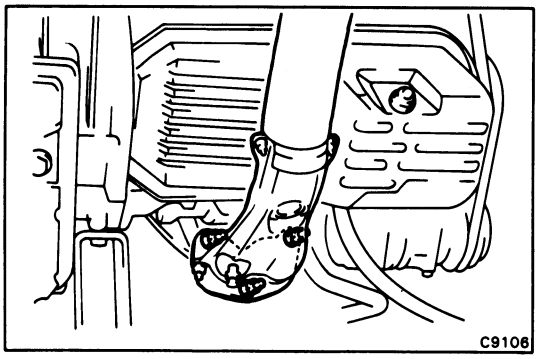

17. REMOVE EXHAUST PIPE

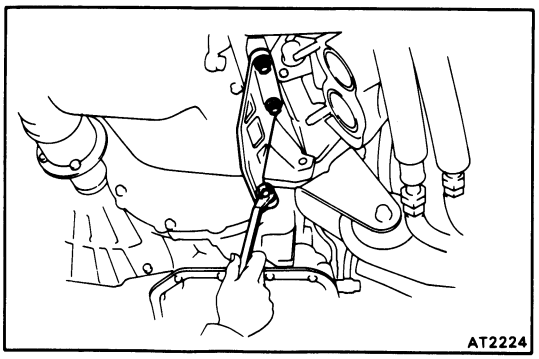

18. REMOVE STIFFENER PLATE

19. REMOVE ENGINE REAR END PLATE

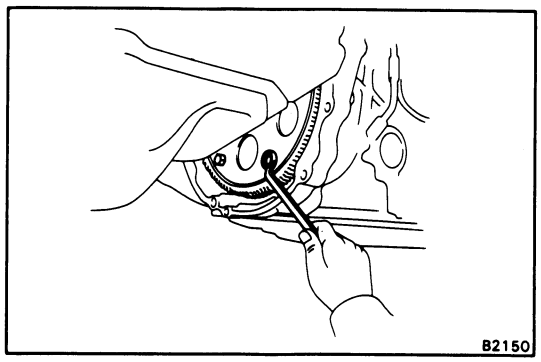

20. REMOVE TORQUE CONVERTER MOUNTING BOLTS

(a) Turn the crankshaft to gain access to each bolt.

(b) Hold the crankshaft pulley bolt with a wrench, remove the six bolts.

21. REMOVE DRIVE SHAFTS
(See page RA-16)

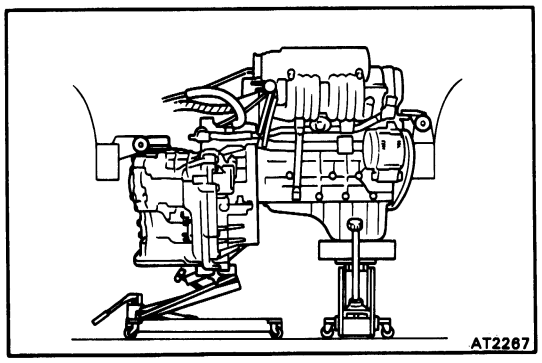

22. HOLD ENGINE AND TRANSAXLE WITH TWO JACKS, OR A CHAIN BLOCK AND JACK

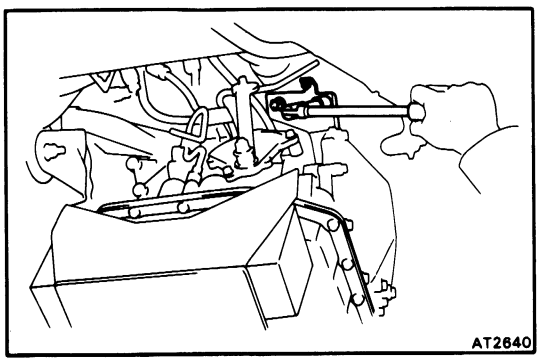

23. REMOVE TRANSMISSION MOUNTING SET BOLTS

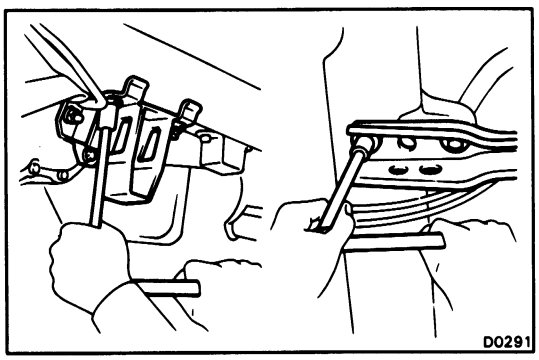

24. DISCONNECT FRONT AND REAR MOUNTING

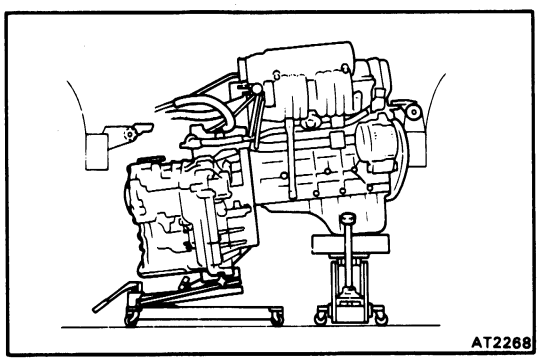

25. REMOVE TRANSAXLE HOUSING MOUNTING BOLTS

Lower the rear end of the transaxle, remove the mounting bolts.

26. REMOVE TRANSAXLE ASSEMBLY FROM ENGINE

Making sure that neither the throttle cable nor wire harneses snag inside the engine compartment moving the transaxle back and forth, left and right, remove the transaxle from the engine.

27. REMOVE TORQUE CONVERTER FROM TRANSAXLE

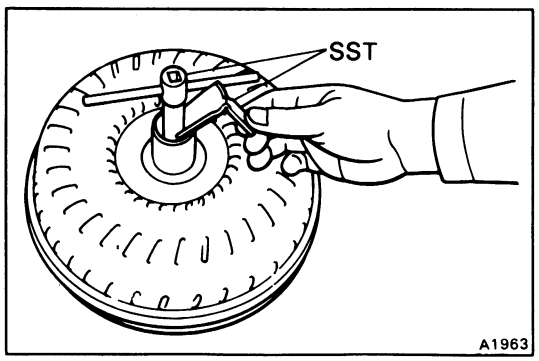

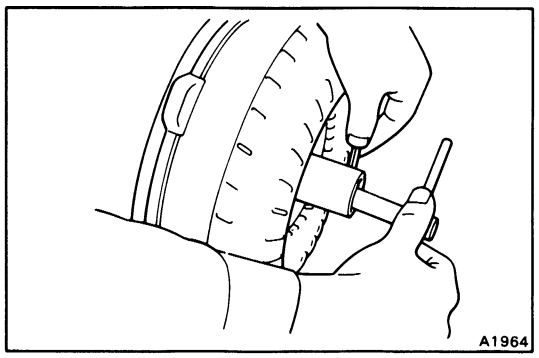

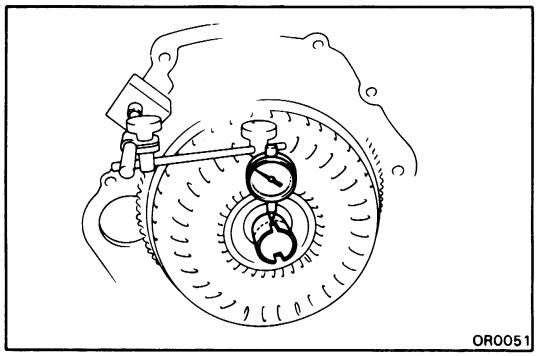

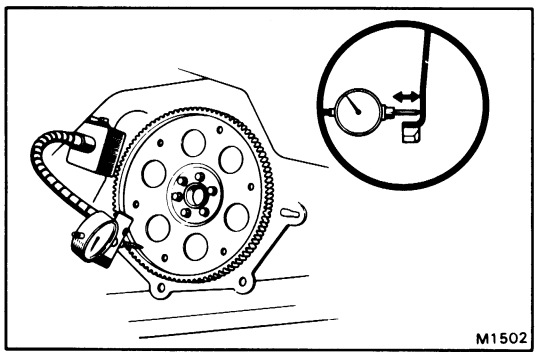

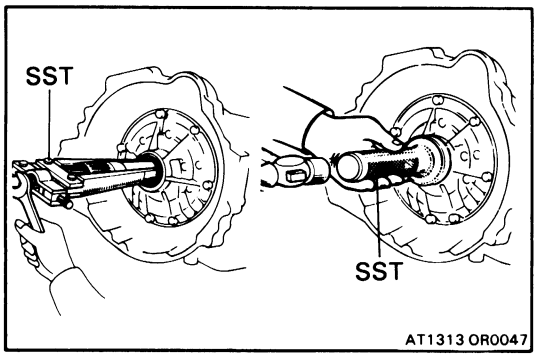

TORQUE CONVERTER

CLEAN TORQUE CONVERTER

If the transmission is contaminated, the torque converter and transmission cooler should be thoroughly flushed with Toyota Transmission Cleaner.

INSPECTION OF TORQUE CONVERTER

1. INSERT SST IN END OF TORQUE CONVERTER

(a) Insert a turning tool in the inner race of the one-way clutch.

(b) Install the stopper so that it fits in the notch of the converter hub and outer race of the one-way clutch.

SST 09350-32014 (09351-32010, 09351-32020)

2. TEST ONE-WAY CLUTCH

With the torque converter positioned upward, the clutch should lock when turned counterclockwise, and should rotate freely and smoothly clockwise. Less than 25 kg-cm (22 in.-lb, 2.5 N·m) of torque should be required to rotate the clutch.

If necessary, clean the converter and retest the clutch. Replace the converter if the clutch still fails the test.

3. MEASURE TORQUE CONVERTER SLEEVE RUNOUT

(a) Temporarily mount the torque converter to the drive plate. Set up a dial indicator.

Torque: 280 kg-cm (20 ft-lb, 27 N·m)

Runout: 0.30 mm (0.0118 in.) or less

If runout exceeds 0.30 mm (0.0118 in.), try to correct it by reorienting the installation of the converter. If excessive runout cannot be corrected, replace the torque converter.

NOTE: Mark the position of the converter to ensure correct installation.

(b) Remove the torque converter.

4. MEASURE DRIVE PLATE RUNOUT AND INSPECT RING GEAR

Set up a dial indicator and measure the drive plate runout.

If runout exceeds 0.20 mm (0.0079 in.) or if the ring gear is damaged, replace the drive plate. If installing a new drive plate, note the orientation of the spacers and tighten the bolts.

Torque: 650 kg-cm (47 ft-lb, 64 N·m)

Runout: 0.20 mm (0.0079 in.) or less

OIL PUMP

REPLACEMENT OF OIL SEAL

1. REMOVE OIL SEAL WITH SST

SST 09350-32014 (09308-10010)

2. INSTALL NEW OIL SEAL

(a) Apply MP grease to the oil seal lip.

(b) Drive in the oil seal with SST.

SST 09350-32014 (09351-32140)

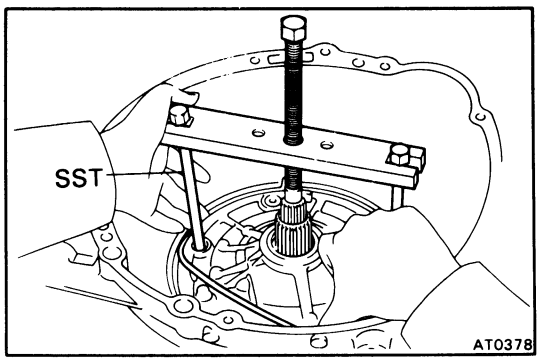

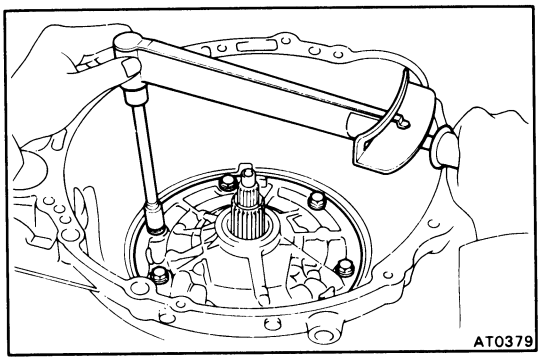

REPLACEMENT OF O-RING

1. REMOVE OIL PUMP

(a) Position the transmission with the oil pump facing upward.

(b) Remove the seven bolts.

(c) Pull up the oil pump to where the O-ring can be removed with SST.

SST 09350-32014 (09351-32061)

(d) Temporarily install the bolt.

2. REMOVE O-RING

3. INSTALL NEW O-RING

4. INSTALL OIL PUMP MOUNTING BOLT

Tighten the seven bolts uniformly and a little at a time.

Torque: 250 kg-cm (18 ft-lb, 25 N·m)

DISASSEMBLY OF TRANSMISSION

COMPONENTS

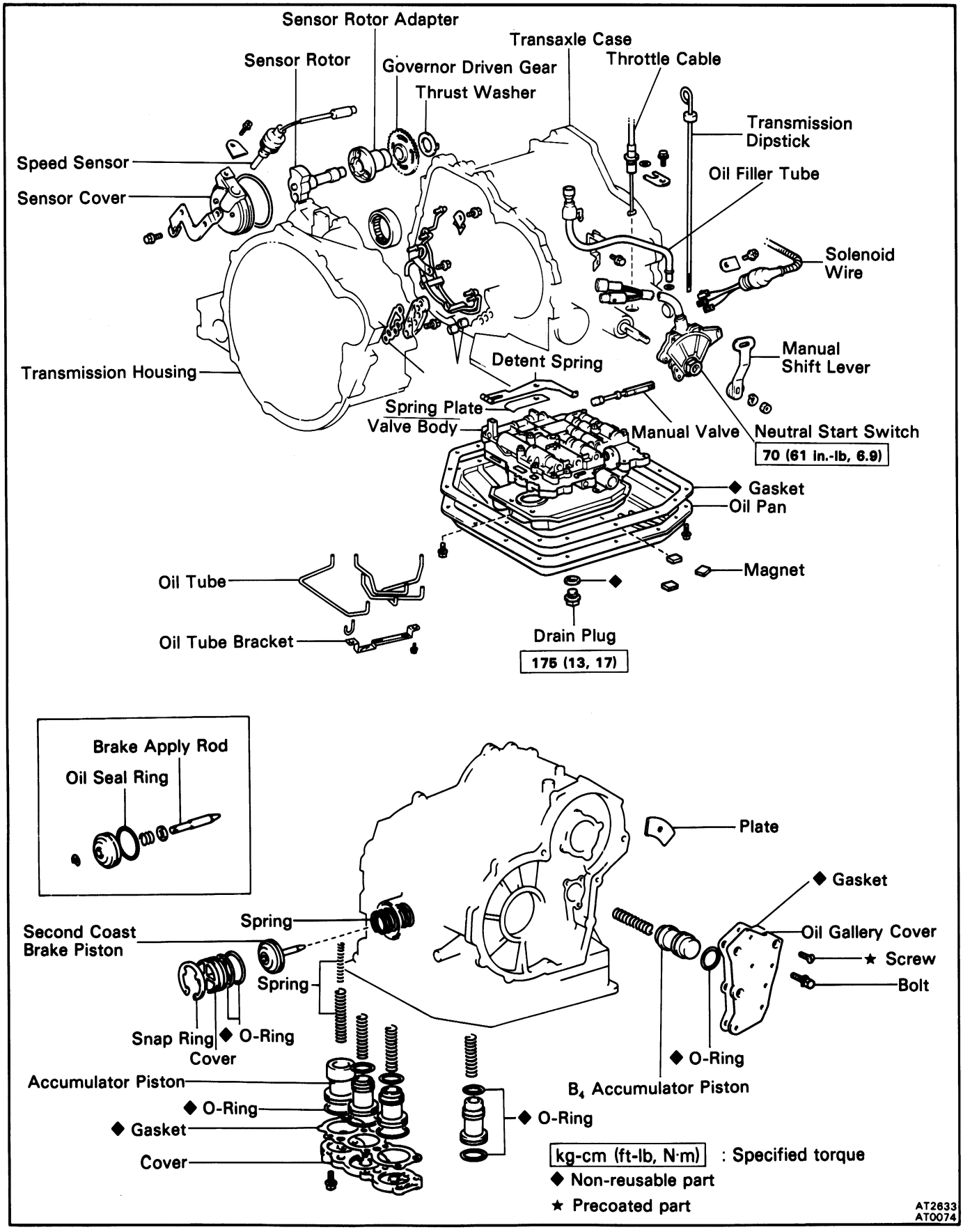

COMPONENTS (Cont'd)

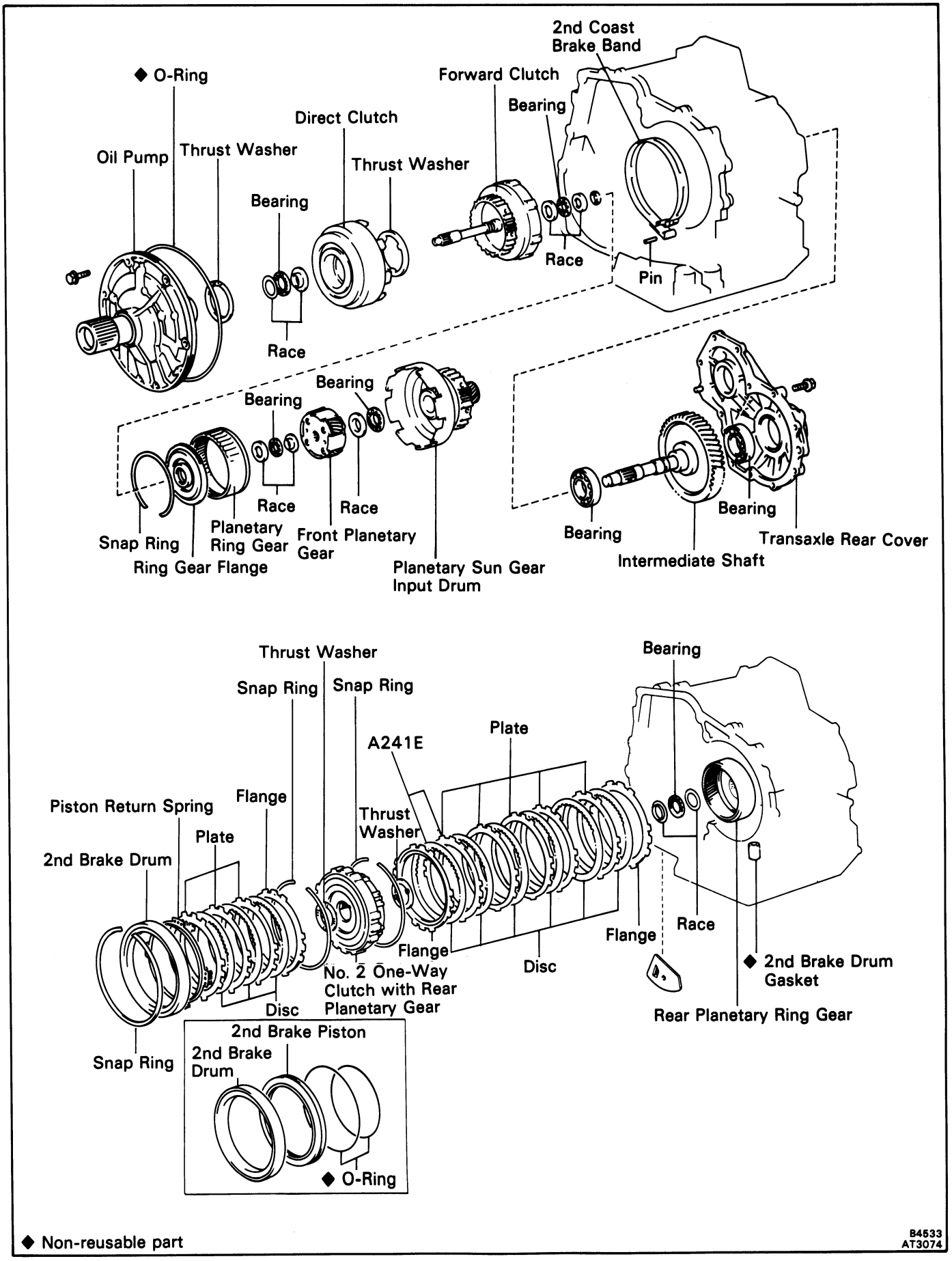

◆ Non-reusable part

B4533
AT3074

COMPONENTS (Cont'd)

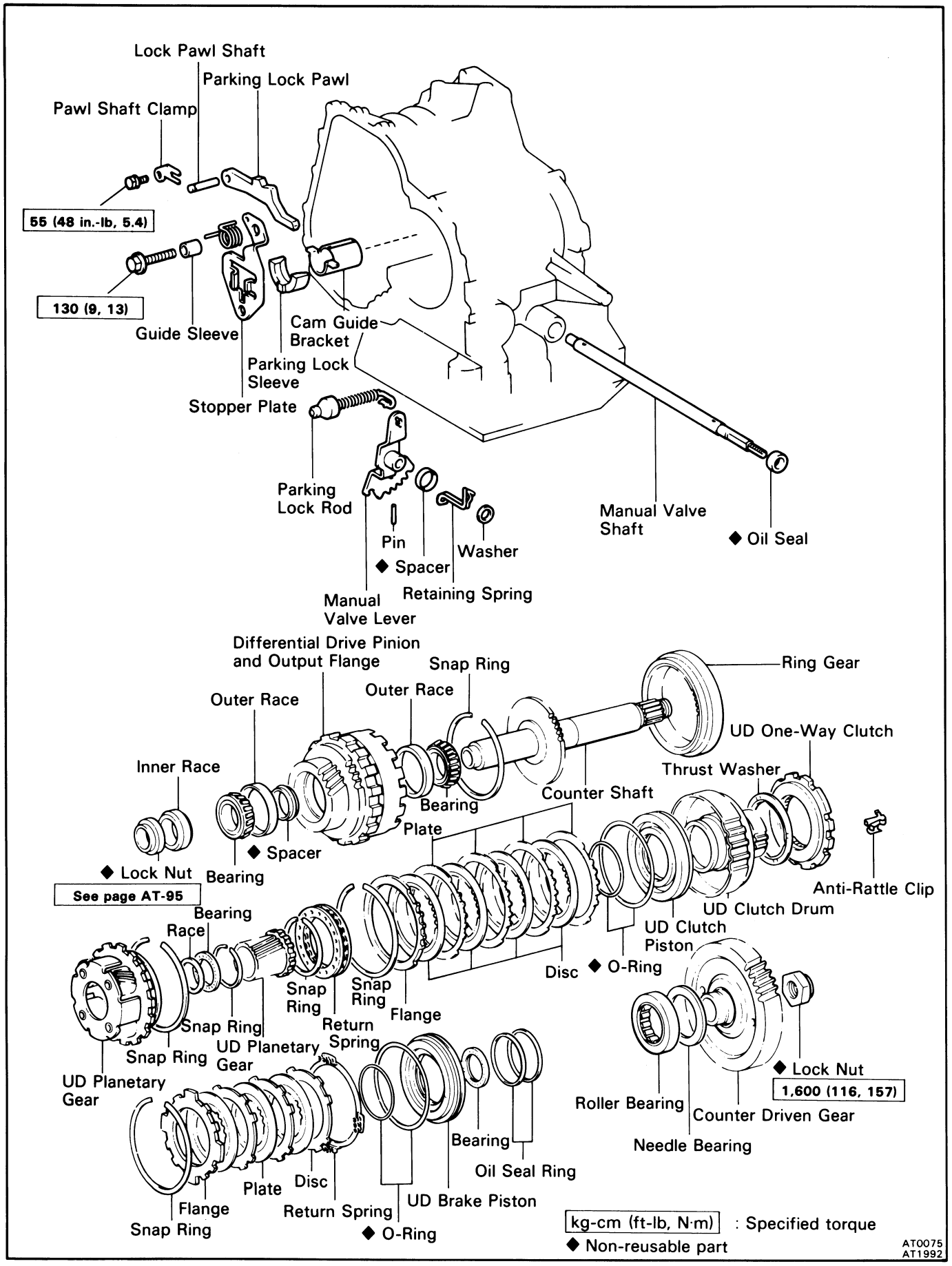

SEPARATE BASIC SUBASSEMBLY

1. **REMOVE THE TWO OIL COOLER PIPES**
2. **REMOVE TRANSMISSION DIPSTICK AND FILLER TUBE**
3. **REMOVE MANUAL SHIFT LEVER**

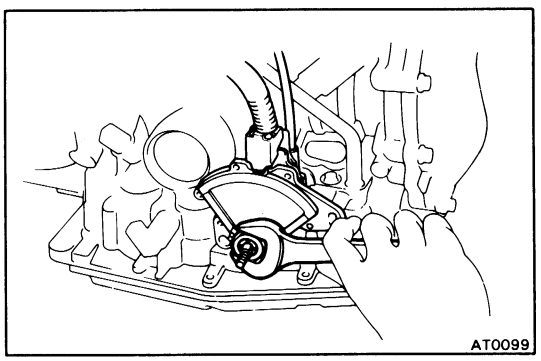

4. **REMOVE NEUTRAL START SWITCH**

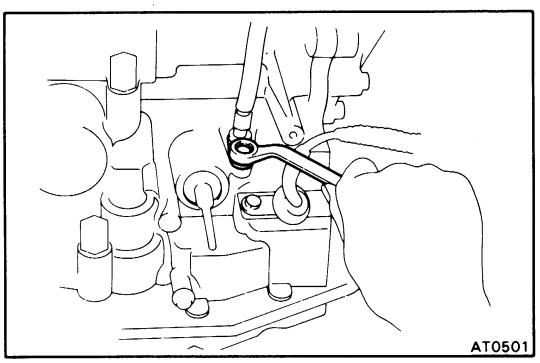

5. **REMOVE THROTTLE CABLE RETAINING PLATE**

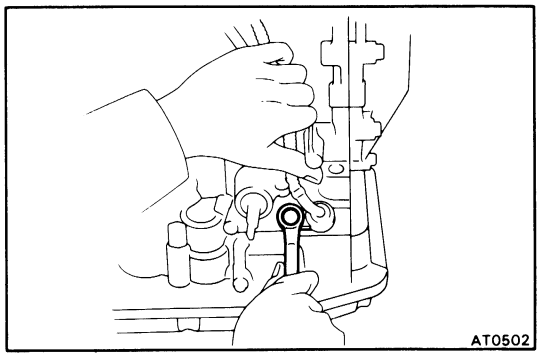

6. **REMOVE SOLENOID WIRE RETAINING PLATE**

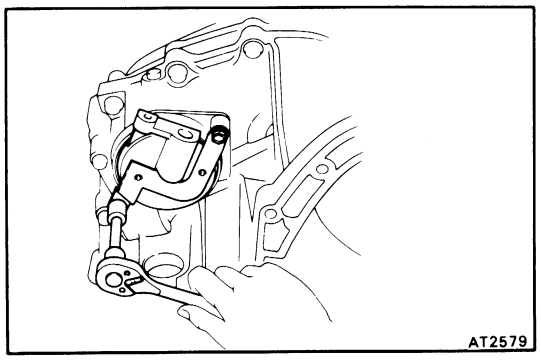

7. **REMOVE SPEED SENSOR AND SENSOR ROTOR**
   (a) Remove the retaining plate and speed sensor.
   (b) Remove the two bolts and sensor cover.

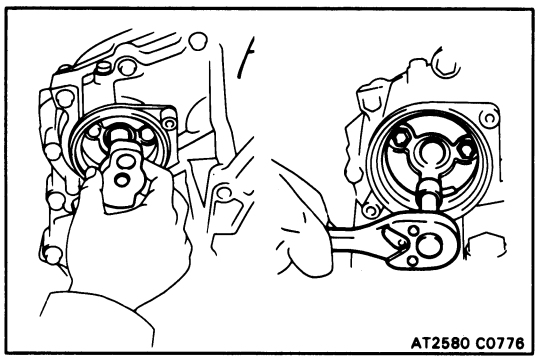

(c) Remove the sensor rotor.

(d) Remove the sensor rotor adaptor.

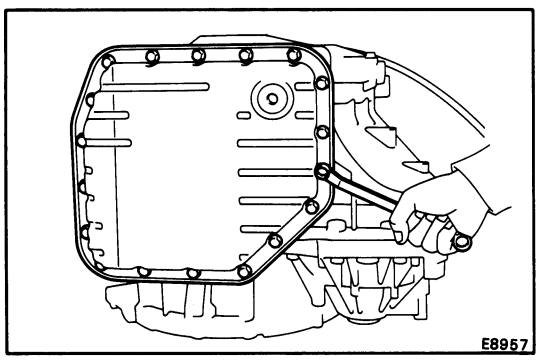

8. REMOVE PAN AND GASKET

(a) Remove the eighteen bolts.

(b) Remove the pan by lifting the transmission case.

CAUTION: Do not turn the transmission over as it will contaminate the valve body with the foreign materials in the bottom of the pan.

(c) Place the transmission on wooden blocks to prevent damage to the pipe.

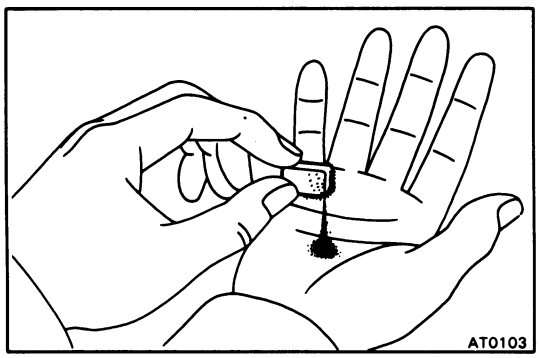

9. EXAMINE PARTICLES IN PAN

Remove the magnet and use it to collect any steel chips. Look carefully at the chips and particles in the pan and on the magnet to anticipate what type of wear you will find in the transmission:

Steel (magnetic) ... bearing, gear and plate wear
Brass (non-magnetic) ... bushing wear

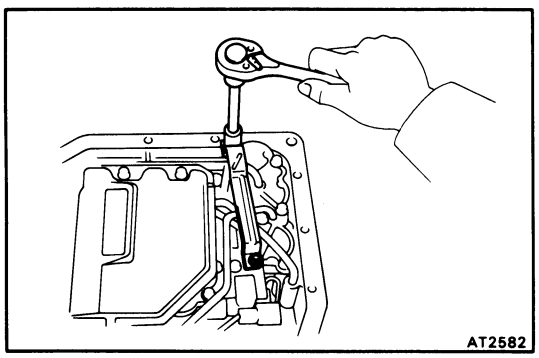

10. TURN TRANSMISSION OVER AND REMOVE OIL TUBE BRACKET

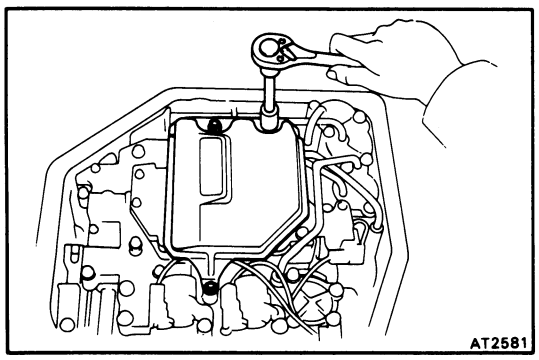

11. REMOVE OIL STRAINER

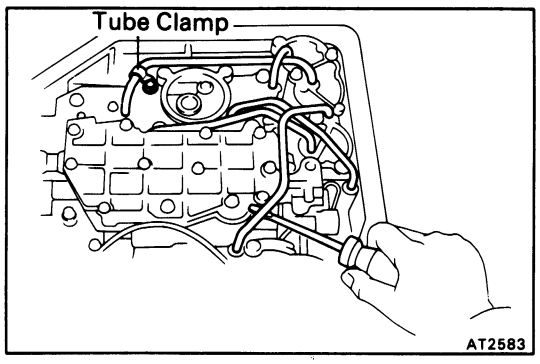

12. REMOVE OIL TUBES

(a) Remove the tube clamp bolt.

(b) Pry up both tube ends with a large screwdriver and remove the five tubes.

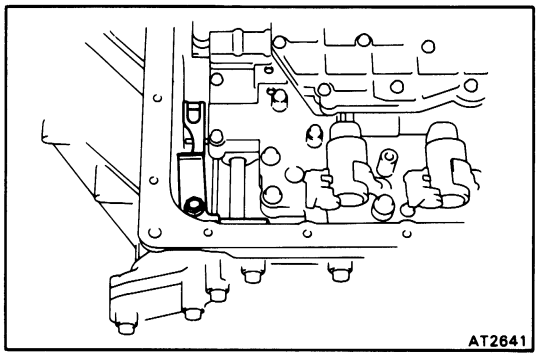

13. REMOVE MANUAL DETENT SPRING

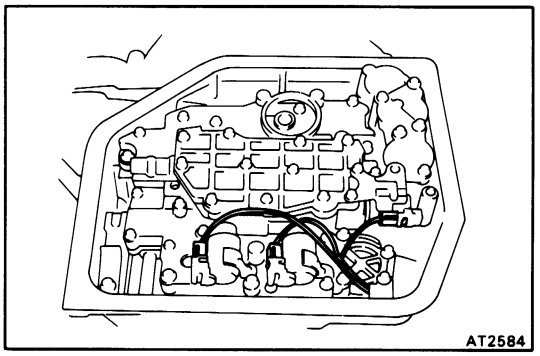

14. DISCONNECT SOLENOID CONNECTORS

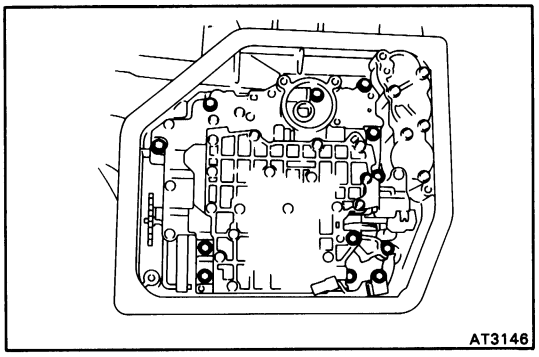

15. REMOVE VALVE BODY

(a) Remove the twelve bolts.

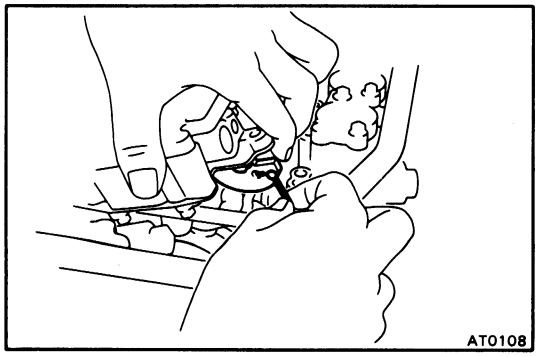

(b) Disconnect the throttle cable from the cam.

(c) Disconnect the manual valve connecting rod from the manual valve lever and remove the valve body.

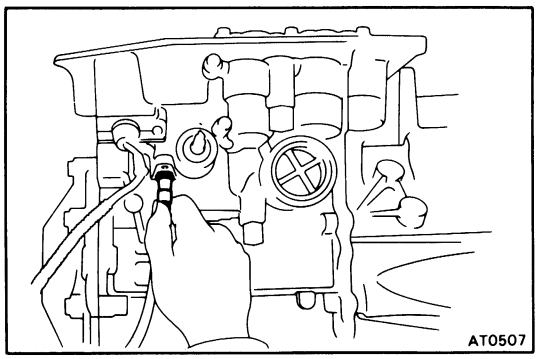

16. REMOVE THROTTLE CABLE FROM CASE

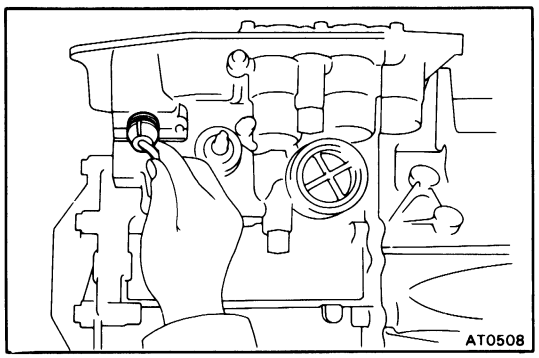

17. REMOVE SOLENOID WIRE

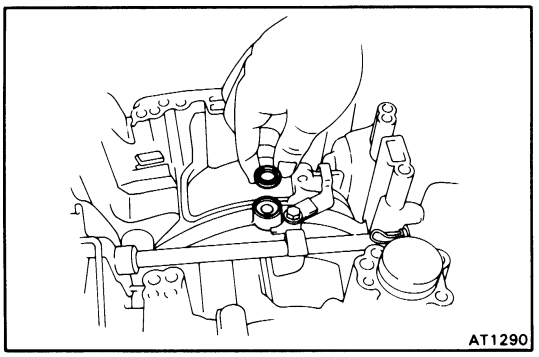

18. REMOVE SECOND BRAKE APPLY GASKET

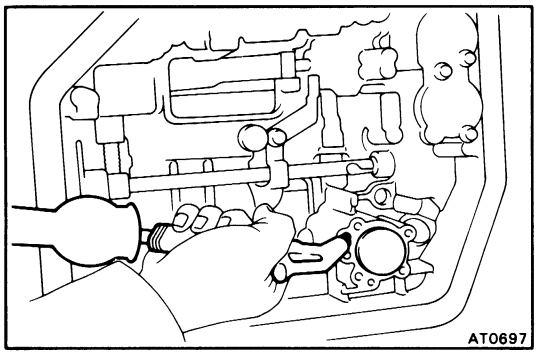

19. REMOVE C_3 ACCUMULATOR PISTON AND SPRING

Using low-pressure compressed air (1 kg/cm², 14 psi or 98 kPa), pop out the piston into a rag.
Force air into the hole shown and remove the piston and spring.

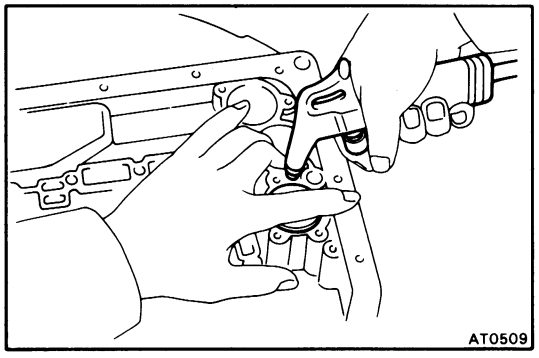

20. REMOVE ACCUMULATOR PISTONS AND SPRINGS

(a) Loosen the five bolts one turn at a time until the spring tension is released.

(b) Remove the cover and the gasket.

(c) Remove the piston and spring for C_1.

(d) Using low-pressure compressed air (1 kg/cm², 14 psi or 98 kPa), pop out piston B_2 and C_2 into a rag. Force air into the hole shown and remove the piston and springs.

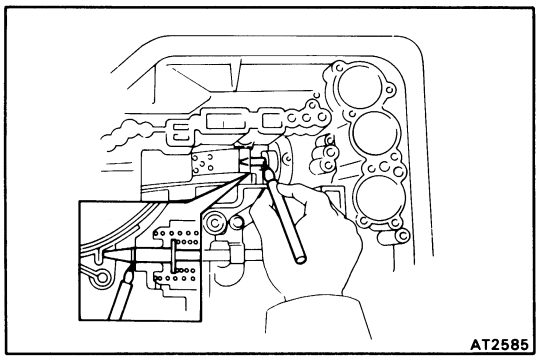

21. MEASURE PISTON STROKE OF SECOND COAST BRAKE

(a) Apply a small amount of paint to the piston rod at the point it meets the case as shown in the illustration.

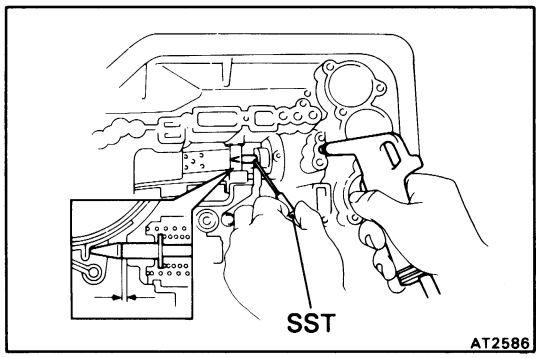

(b) Using SST, measure the piston stroke applying and releasing the compressed air (4 – 8 kg/cm², 57 – 114 psi or 392 – 785 kPa) as shown.

SST 09240-00020

Piston stroke: 1.5 – 3.0 mm (0.059 – 0.118 in.)

If the piston stroke exceeds the limit, replace the piston rod or brake band.

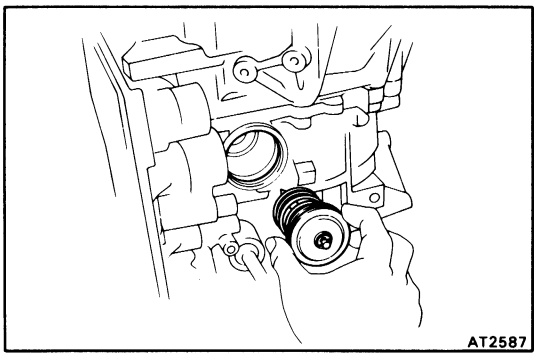

22. REMOVE SECOND COAST BRAKE PISTON

(a) Remove the snap ring.

(b) Remove the cover.

(c) Remove the piston and the outer return spring.

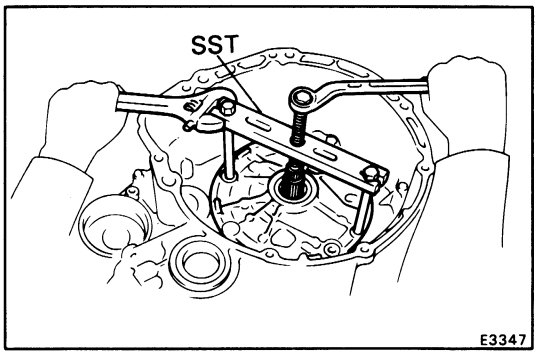

23. REMOVE OIL PUMP

(a) Remove the six blots.

(b) Using SST, pull out the oil pump.

SST 09350-32014 (09351-32061)

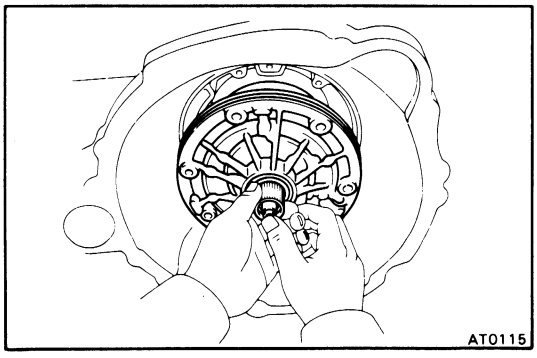

24. REMOVE OIL PUMP

25. WATCH FOR RACE AND BEARING BEHIND OIL PUMP

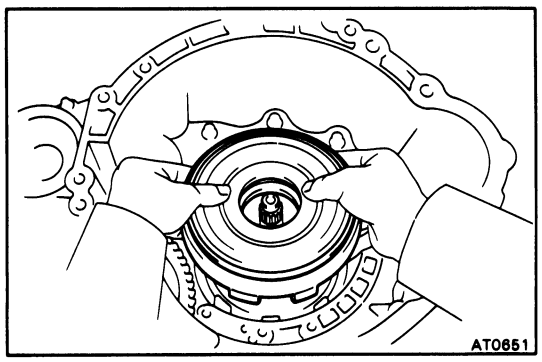

26. REMOVE DIRECT CLUTCH

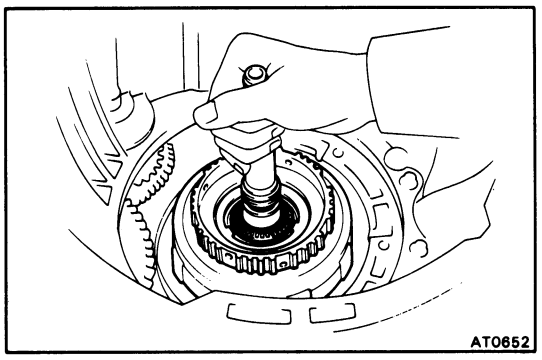

27. REMOVE FORWARD CLUTCH

28. WATCH FOR RACES AND BEARINGS

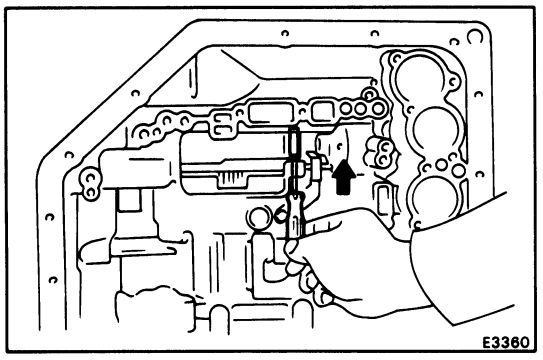

29. REMOVE SECOND COAST BRAKE BAND

(a) Push the pin with a small screwdriver and remove it from the bolt hole of the oil pump mounting.

(b) Remove the brake band.

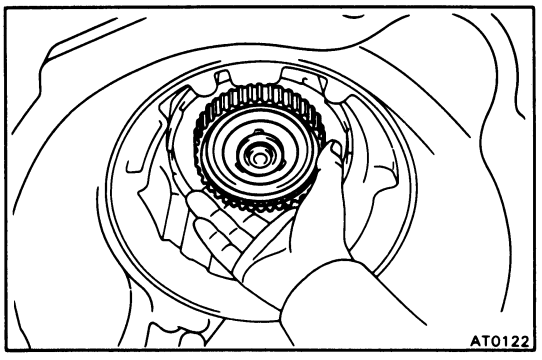

30. REMOVE FRONT PLANETARY RING GEAR WITH BEARING AND RACE

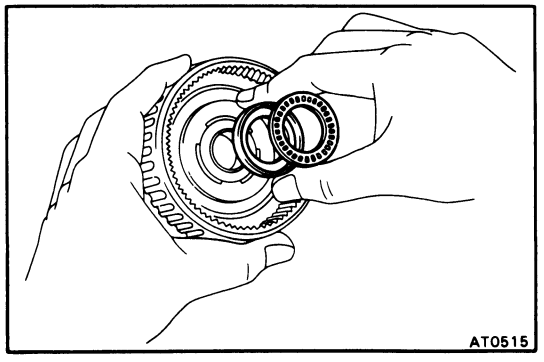

31. WATCH FOR RACE AND BEARING ON RING GEAR

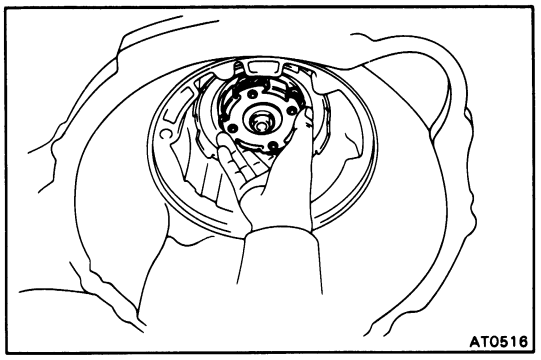

32. REMOVE FRONT PLANETARY GEAR WITH RACE

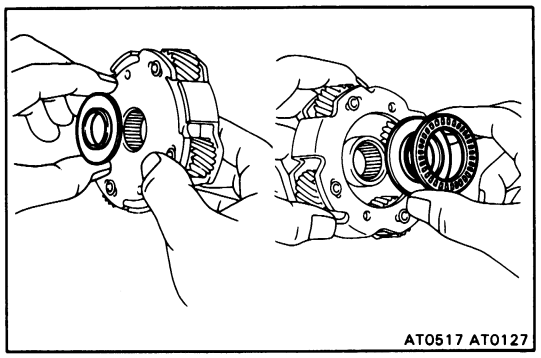

33. WATCH FOR RACES AND BEARING ON FRONT PLANETARY GEAR

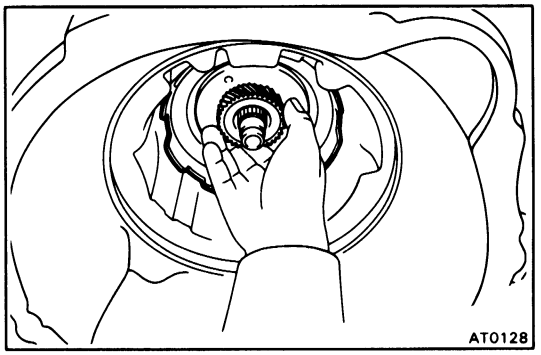

34. REMOVE SUN GEAR, SUN GEAR INPUT DRUM AND THRUST WASHER

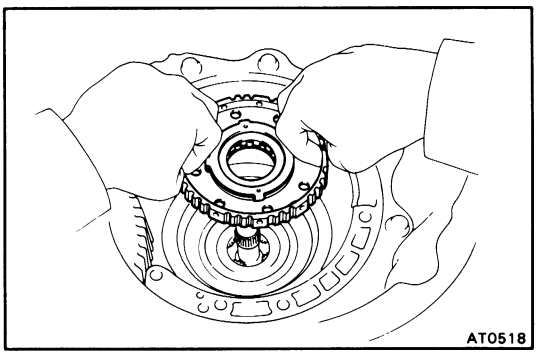

35. REMOVE SECOND BRAKE HUB AND NO. 1 ONE-WAY CLUTCH

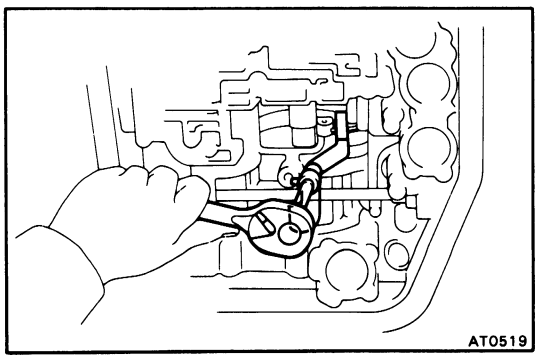

36. REMOVE SECOND COAST BRAKE BAND GUIDE

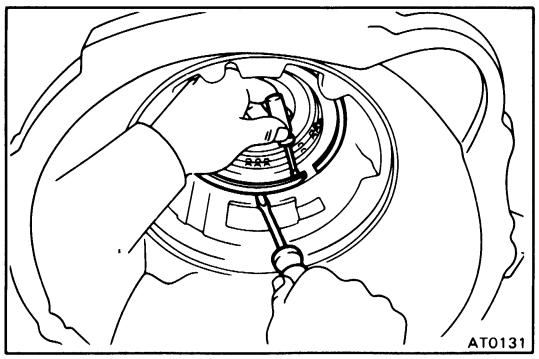

37. REMOVE SNAP RING HOLDING SECOND BRAKE DRUM TO CASE

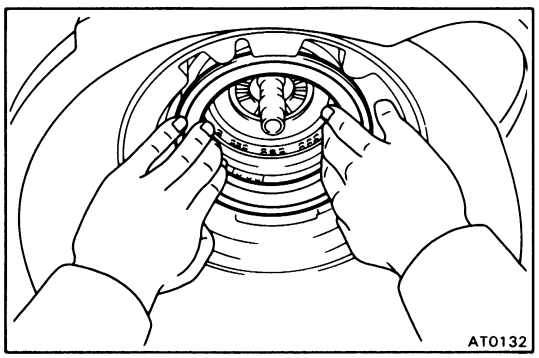

38. REMOVE SECOND BRAKE DRUM

If the brake drum is difficult to remove, lightly tap it with a wooden block.

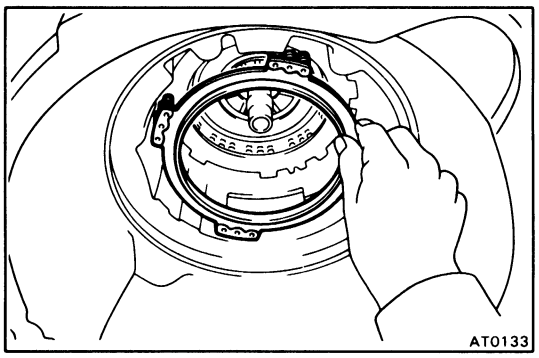

39. REMOVE SECOND BRAKE PISTON RETURN SPRING

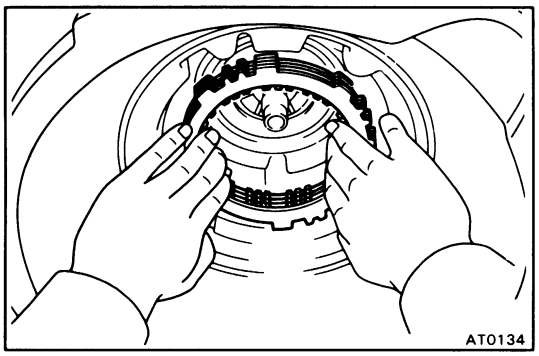

40. REMOVE PLATES, DISCS, AND FLANGE

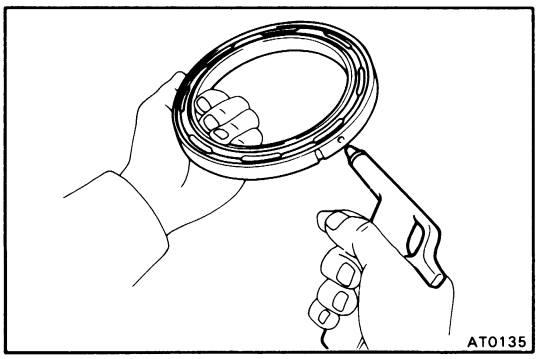

41. BLOW OUT PISTON WITH COMPRESSED AIR

Use compressed air to remove the piston.

NOTE: Hold the piston so it is not horizontal, and blow with the gun slightly away from the oil hole.

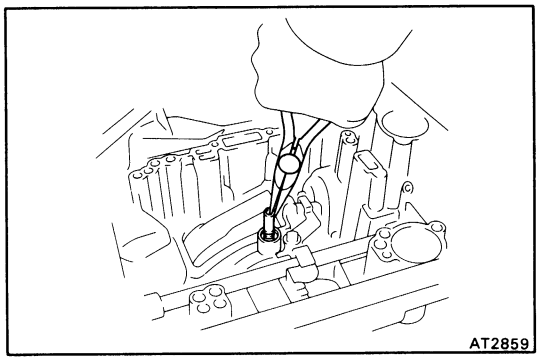

42. REMOVE SECOND BRAKE DRUM SEAL

Using a needle nose pliers, pull out the second brake drum seal.

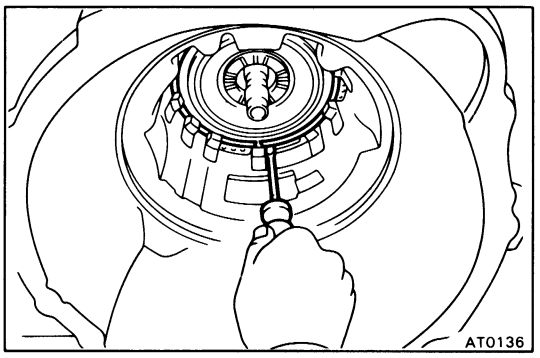

43. REMOVE SNAP RING HOLDING NO. 2 ONE-WAY CLUTCH OUTER RACE TO CASE

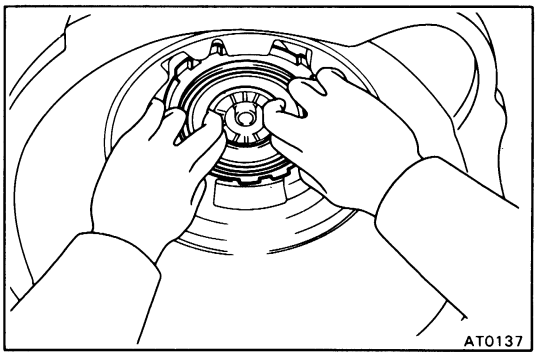

44. REMOVE NO. 2 ONE-WAY CLUTCH AND REAR PLANETARY GEAR WITH THRUST WASHERS

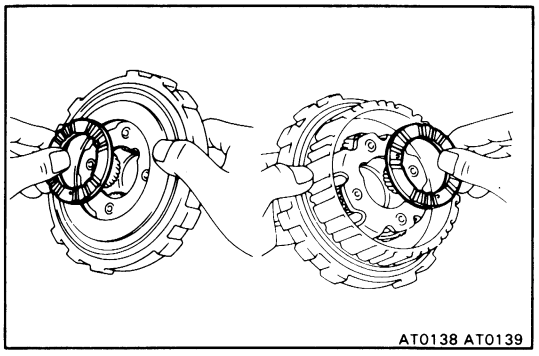

45. WATCH FOR THRUST WASHERS OF PLANETARY CARRIER ON BOTH SIDES

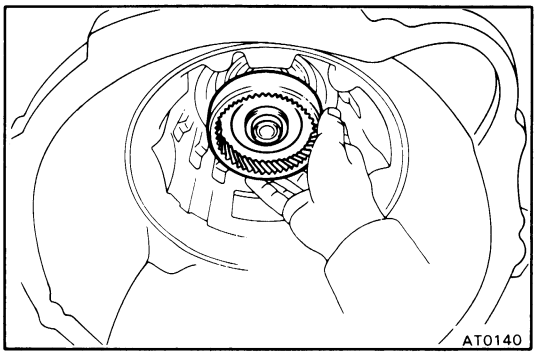

46. REMOVE REAR PLANETARY RING GEAR AND BEARING

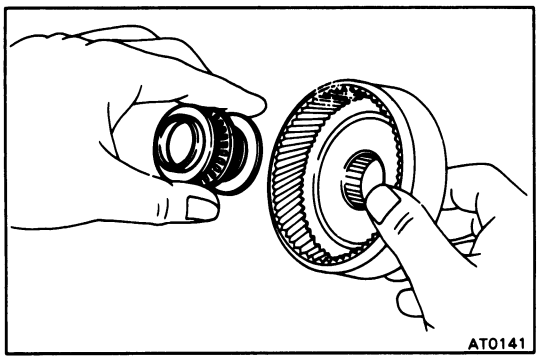

47. WATCH FOR RACES AND BEARING ON RING GEAR

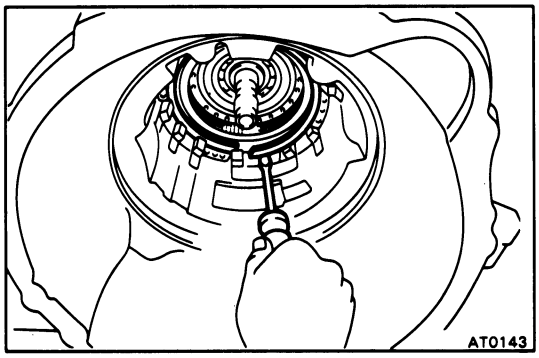

48. REMOVE SNAP RING HOLDING FLANGE TO CASE

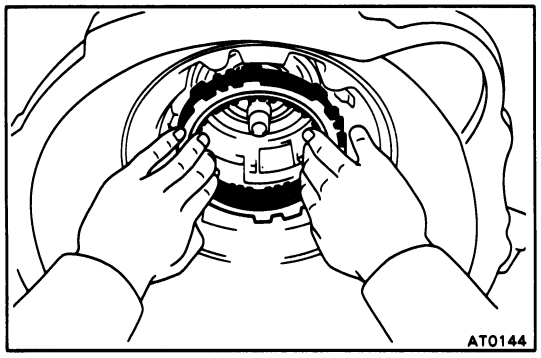

49. REMOVE FLANGES, PLATES AND DISCS

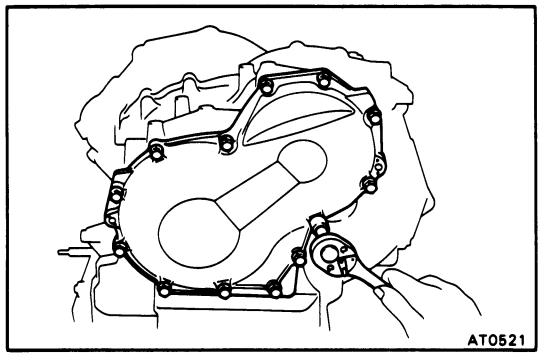

50. TURN TRANSMISSION CASE AROUND

51. REMOVE THE THIRTEEN BOLTS HOLDING TRANSAXLE REAR COVER TO TRANSMISSION CASE

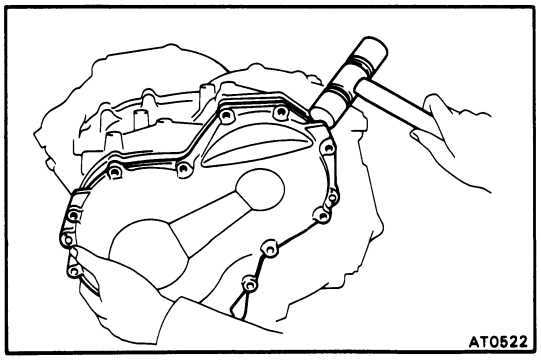

52. REMOVE TRANSAXLE REAR COVER AND INTERMEDIATE SHAFT

(a) Tap on the circumference of the cover with a plastic hammer to remove the cover from the transmission case.

(b) Remove the intermediate shaft if it remain in the transmission.

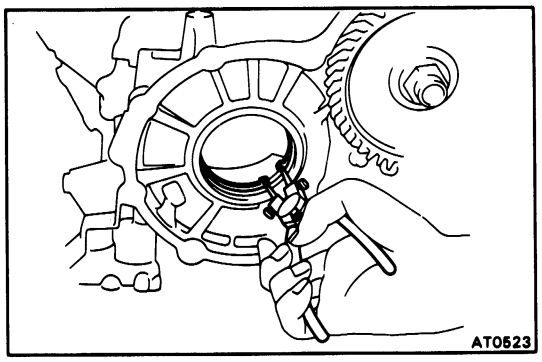

53. REMOVE SNAP RING

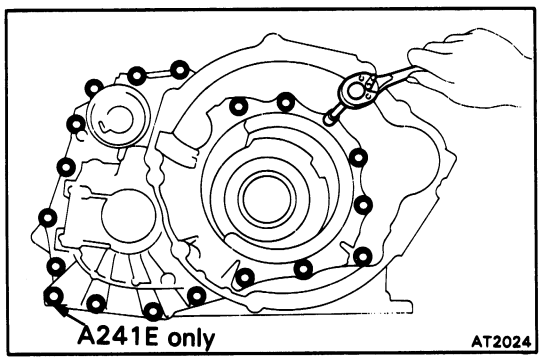

54. REMOVE TRANSAXLE HOUSING

Remove the bolts and transaxle housing.

NOTE: A240E . . . eighteen bolts
A241E . . . nineteen bolts

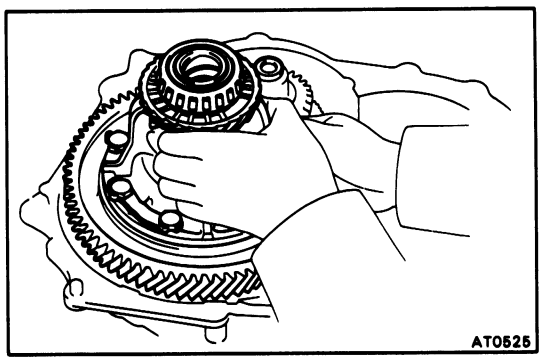

55. REMOVE DIFFERENTIAL

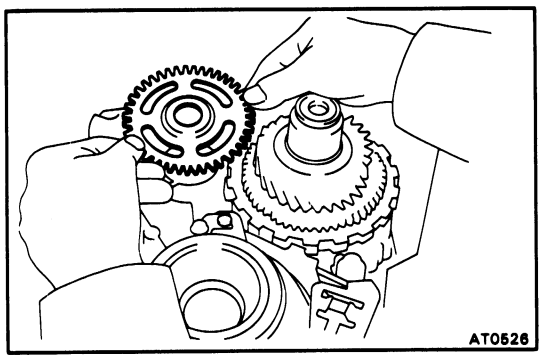

56. REMOVE GOVERNOR DRIVEN GEAR

(a) Remove the governor driven gear.

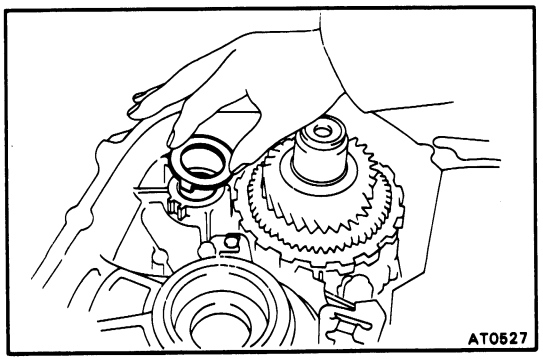

(b) Remove the thrust washer.

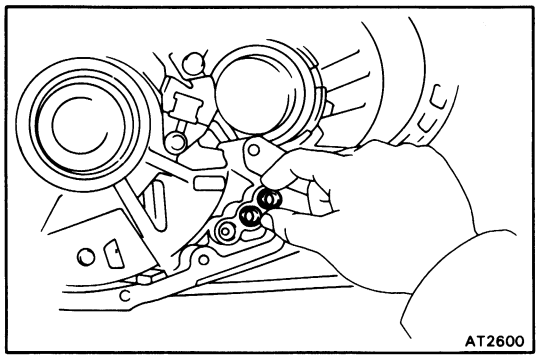

57. REMOVE OIL SEALS

Remove the two oil seals.

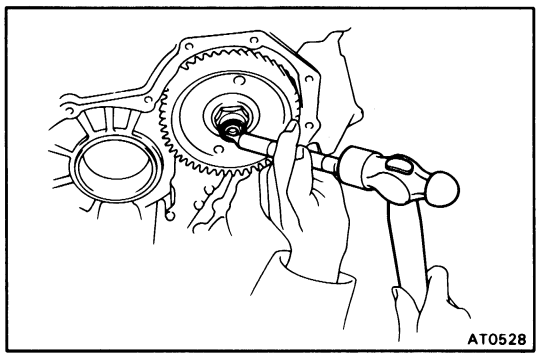

58. REMOVE COUNTER SHAFT LOCK NUTS

(a) Using a chisel and hammer, unstake the counter shaft lock nut on both sides.

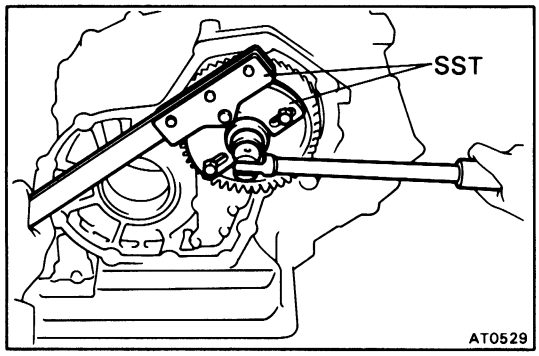

(b) Using SST, remove the lock nut of the driven gear side.

SST 09330-00021 and 09350-32014 (09351-32032)

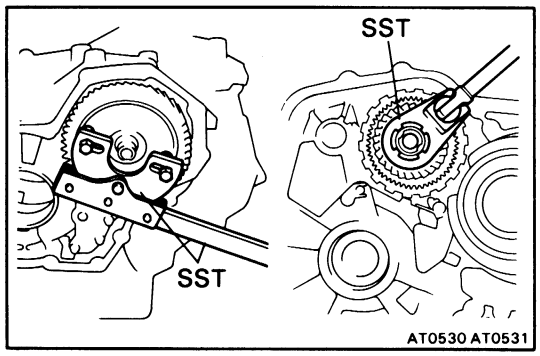

(c) Using SST to hold the driven gear, remove the lock nut the another side.

SST 09330-00021 and
09350-32014 (09351-32032, 09351-32170)

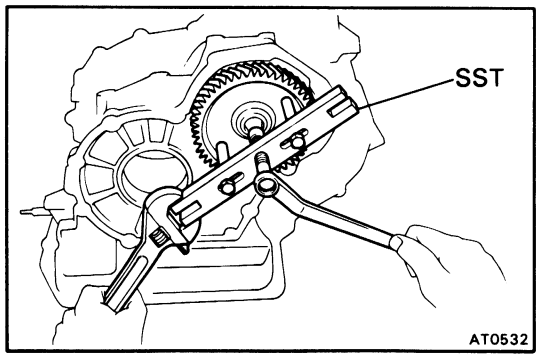

59. REMOVE COUNTER DRIVEN GEAR

Using SST, remove the driven gear.

SST 09350-32014 (09351-32061)

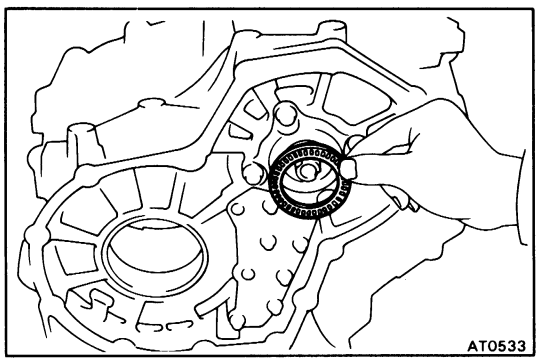

60. REMOVE THRUST NEEDLE BEARING

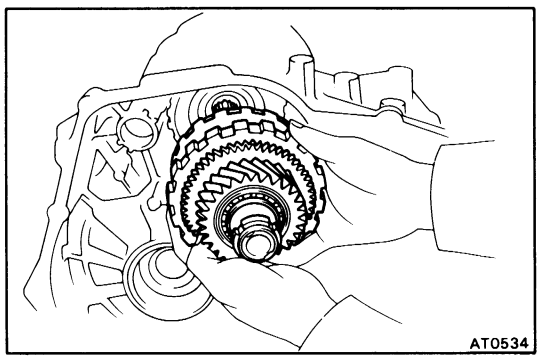

61. REMOVE COUNTER SHAFT ASSEMBLY AND ANTI-RATTLE CLIP

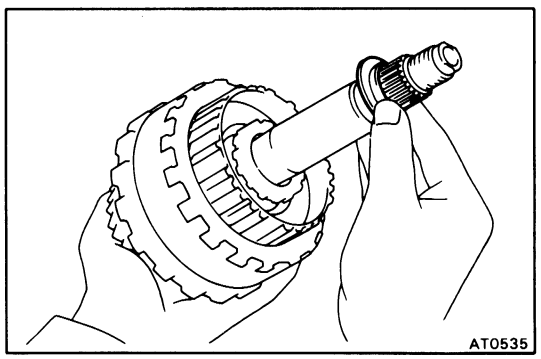

62. REMOVE THRUST BEARING WITH RACE

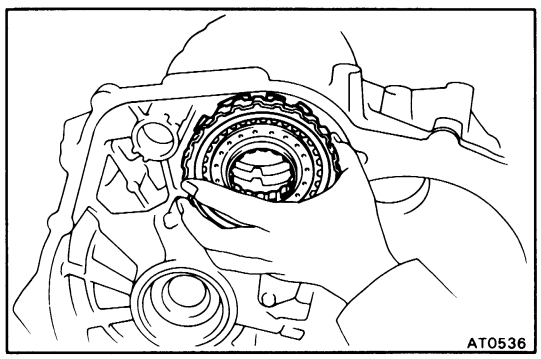

63. REMOVE UNDERDRIVE CLUTCH DRUM

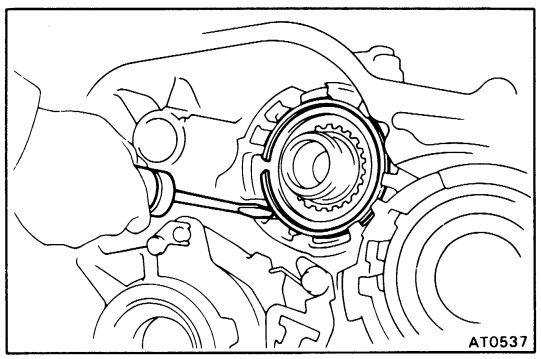

64. REMOVE SNAP RING

CAUTION: The snap ring is cushioned by a return spring, so when removing be careful that it does not fly off.

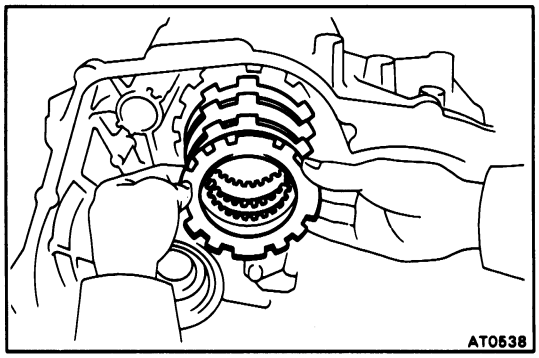

65. REMOVE FLANGE, PLATES AND DISCS

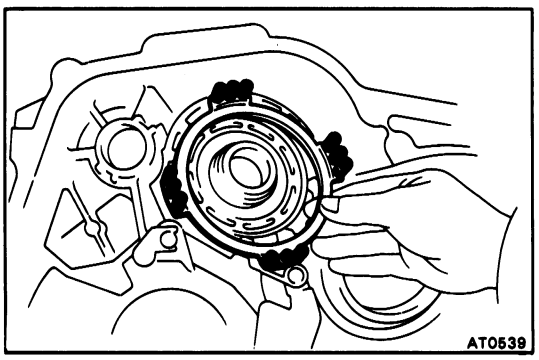

66. REMOVE BRAKE RETURN SPRING

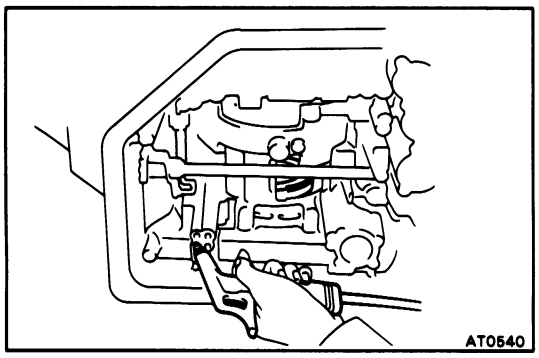

67. REMOVE UNDERDRIVE BRAKE PISTON

Using low-pressure compressed air (1 kg/cm^2, 14 psi or 98 kPa), pop out the brake piston into a rag. Force air into the hole shown and remove the brake piston.

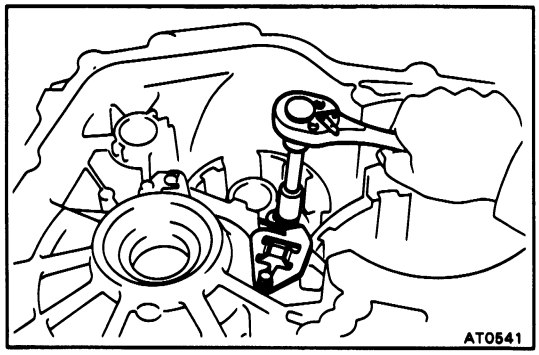

68. REMOVE PARKING LOCK PAWL STOPPER PLATE, TORSION SPRING AND SPRING GUIDE

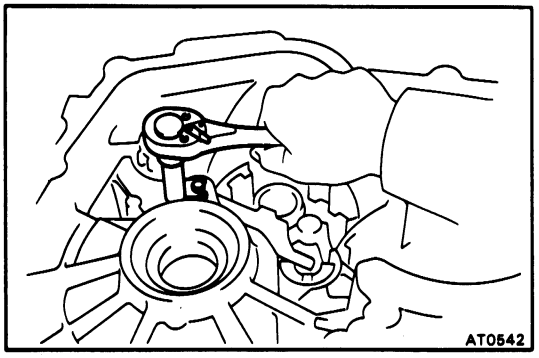

69. REMOVE PAWL SHAFT CLAMP

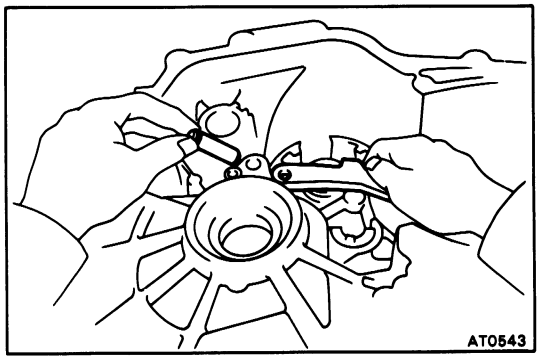

70. REMOVE PARKING LOCK PAWL SHAFT AND LOCK PAWL

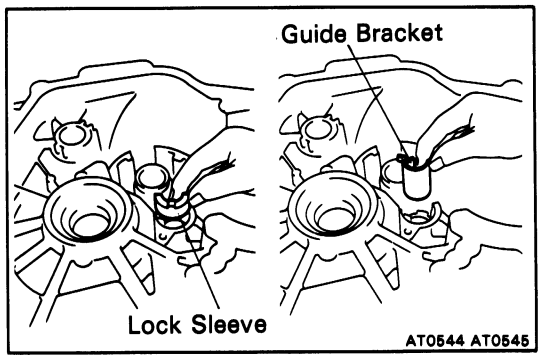

71. REMOVE PARKING LOCK SLEEVE

72. REMOVE CAM GUIDE BRACKET

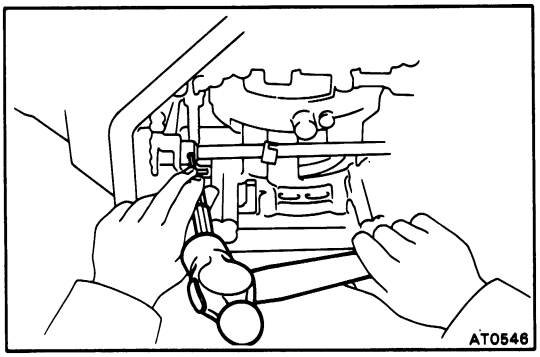

73. REMOVE MANUAL VALVE SHAFT SPACER

Unstake the spacer and remove it.

74. REMOVE PIN

Using a punch and hammer, drive out the pin.

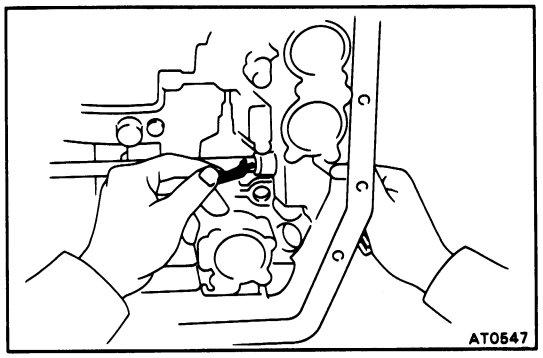

75. REMOVE MANUAL VALVE SHAFT AND LEVER

(a) Remove the retaining spring.

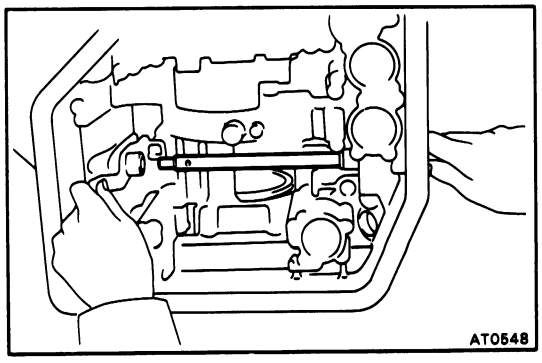

(b) Slide out the manual valve shaft and remove the manual valve lever and washer.

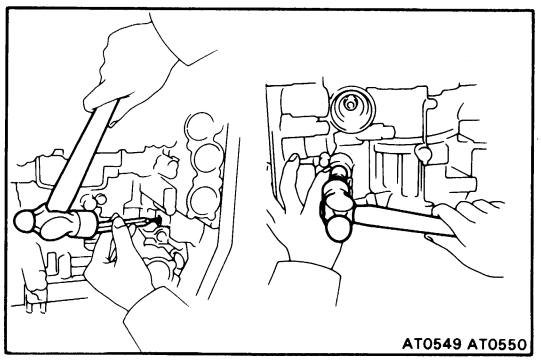

76. IF NECESSARY, REPLACE OIL SEAL OF MANUAL SHAFT

(a) Remove the oil seal with a punch.

(b) Drive in a new oil seal.

(c) Apply MP grease to the oil seal lip.

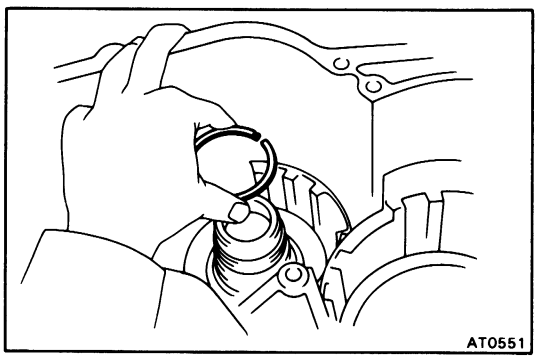

77. REMOVE OIL SEAL RINGS

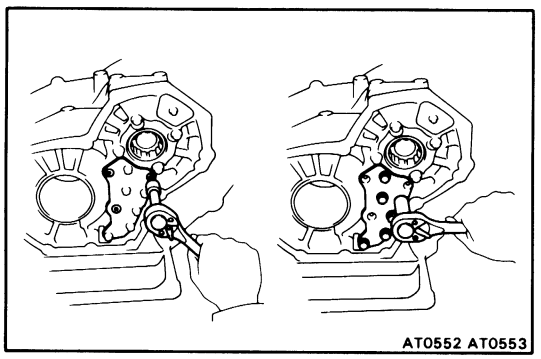

78. REMOVE OIL GALLERY COVER AND GASKET

(a) Remove the three screws and six bolts.

(b) Remove the gallery cover and gasket.

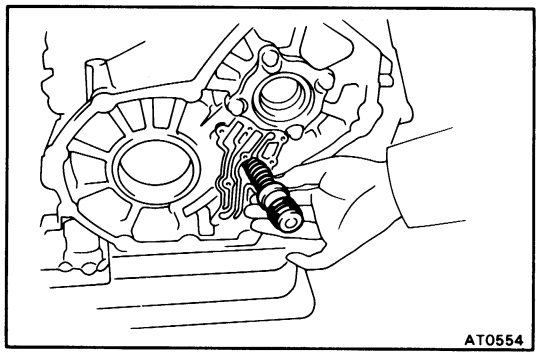

79. REMOVE B_4 ACCUMULATOR PISTON AND SPRING

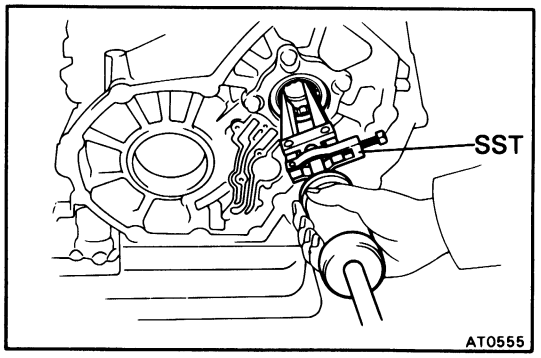

80. REMOVE BEARING

Using SST, remove the bearing.

SST 09308-00010

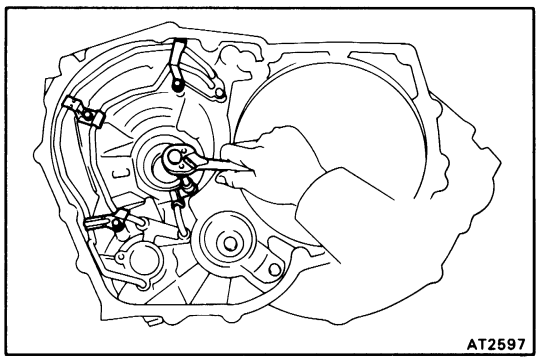

81. REMOVE THE FOUR OIL TUBE CLAMPS

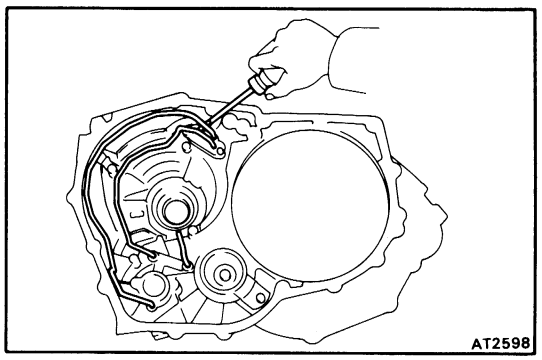

82. REMOVE OIL TUBES WITH SCREWDRIVER

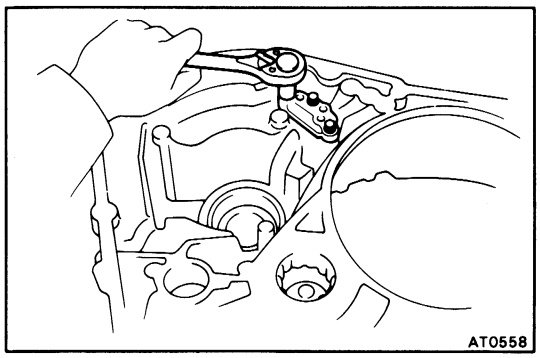

83. REMOVE OIL TUBE APPLY COVER AND GASKET

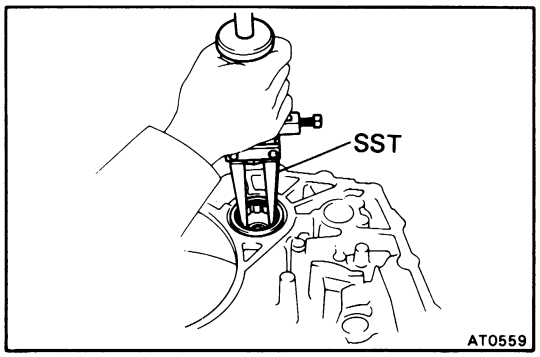

84. REMOVE BEARING

(a) Remove the bearing stopper.

(b) Using SST, remove the bearing.

SST 09308-00010

COMPONENT GROUP DISASSEMBLY, INSPECTION AND ASSEMBLY

The instructions here are organized so that you work on only one component group at a time. This will help avoid confusion of similar-looking parts from different subassemblies being on your workbench at the same time.
The component groups are inspected and repaired from the converter housing side.

As much as possible, complete the inspection, repair and assembly before proceeding to the next component group. If a component group cannot be assembled because parts are being ordered, be sure to keep all parts of that group in a separate container while proceeding with disassembly, inspection, repair and assembly of other component groups.
Recommended ATF DEXRON® II

GENERAL CLEANING NOTES:

1. All disassembled parts should be washed clean and the fluid passages and holes blown through with compressed air to make sure that they are not clogged.
2. The recommended automatic transmission fluid or kerosene should be used for cleaning.
3. When using compressed air to dry parts, keep face away to avoid spraying ATF or kerosene in your face.

PARTS ARRANGEMENT:

1. After cleaning, the parts should be arranged in proper order to allow efficient inspection, repairs, and reassembly.
2. When disassembling a valve body, be sure to keep each valve together with the corresponding spring.
3. New brakes and clutches that are to be used for replacement must be soaked in transmission fluid for at least two hours before assembly.

GENERAL ASSEMBLY:

1. All oil seal rings, clutch discs, clutch plates, rotating parts, and sliding surfaces should be coated with transmission fluid prior to reassembly.
2. All gaskets and rubber O-rings should be replaced.
3. Make sure that the ends of a snap ring are not aligned with one of the cutouts and are installed in the groove correctly.
4. If a worn bushing is to be replaced, the subassembly containing that busing must be replaced.
5. Check thrust bearings and races for wear or damage. Replace if necessary.
6. Use petroleum jelly to keep parts in place.

Oil Pump

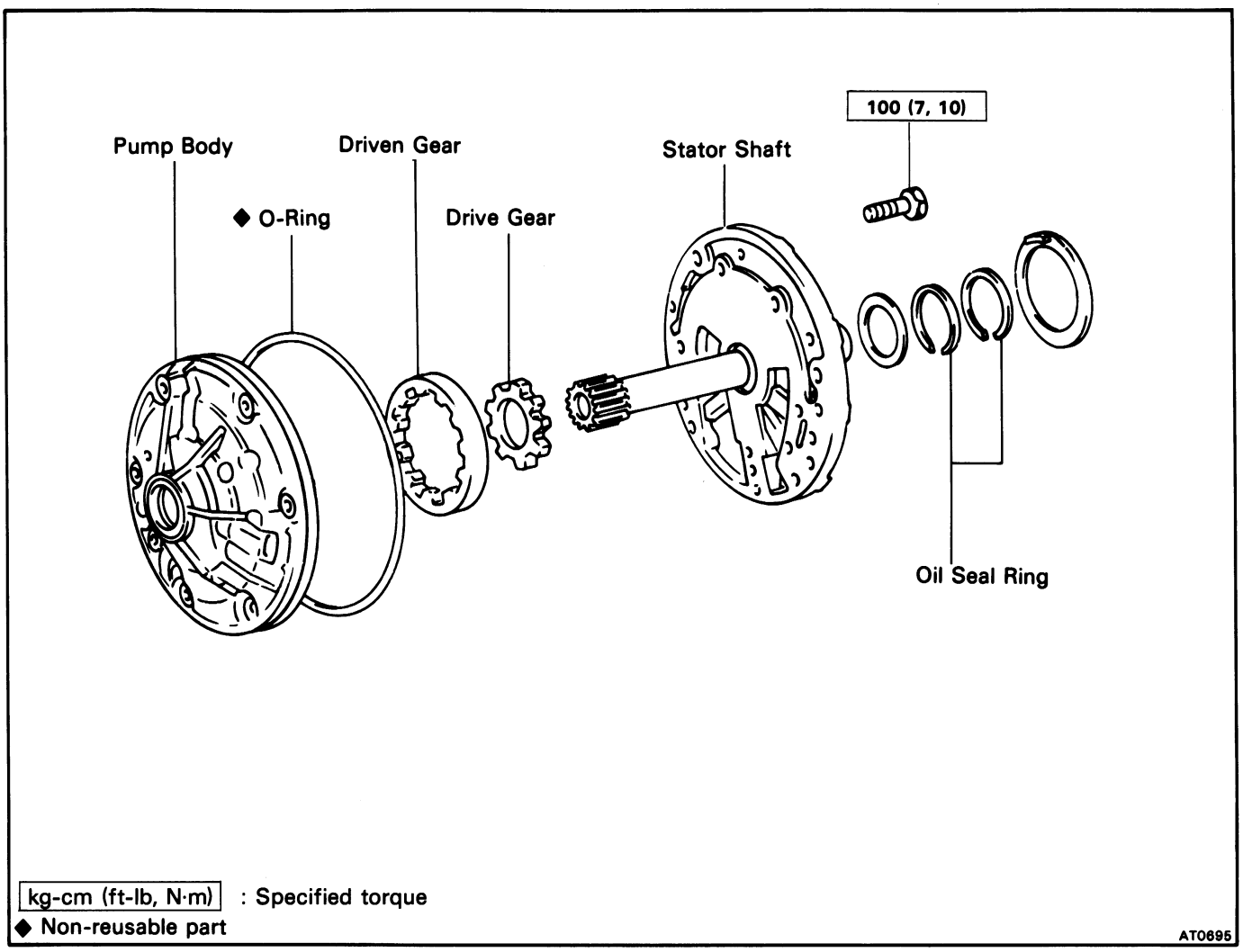

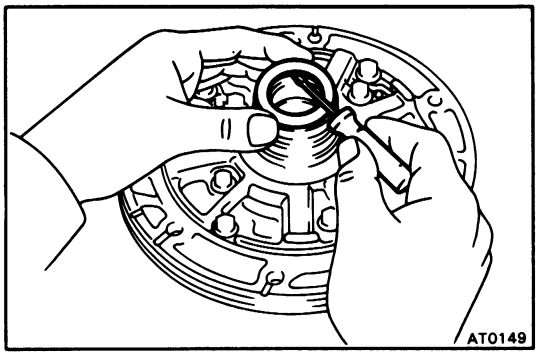

DISASSEMBLY OF OIL PUMP

1. **REMOVE RACE FROM STATOR SHAFT**
2. **REMOVE O-RING FROM PUMP BODY**

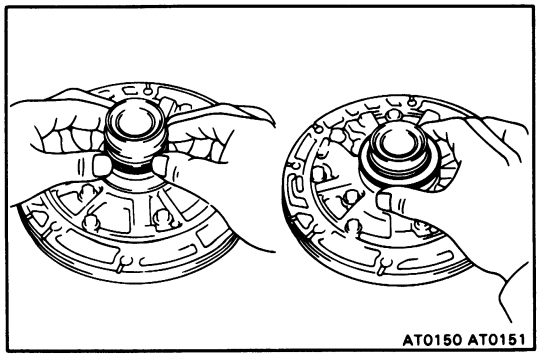

3. **REMOVE TWO OIL SEAL RINGS FROM BACK OF STATOR SHAFT**
4. **REMOVE THRUST WASHER OF CLUTCH DRUM FROM STATOR SHAFT**

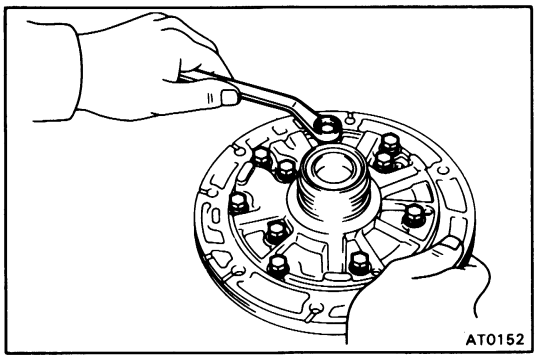

5. REMOVE STATOR SHAFT

Remove the eleven bolts and the stator shaft.
Identify the top and bottom.
Keep gears in assembly order.

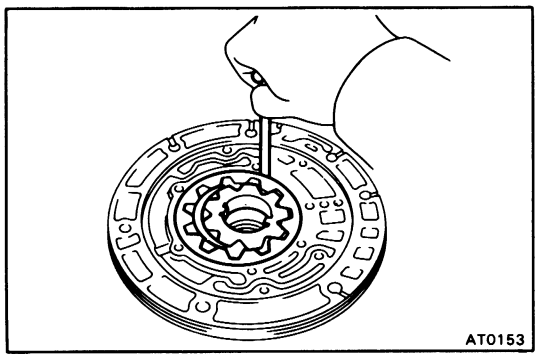

INSPECTION OF OIL PUMP

1. CHECK BODY CLEARANCE OF DRIVEN GEAR

Push the driven gear to one side of the body.
Using a feeler gauge, measure the clearance.

Standard body clearance: 0.07 – 0.15 mm (0.0028 – 0.0059 in.)
Maximum body clearance: 0.3 mm (0.012 in.)

If the body clearance is greater than the maximum, replace the drive gear, driven gear or pump body.

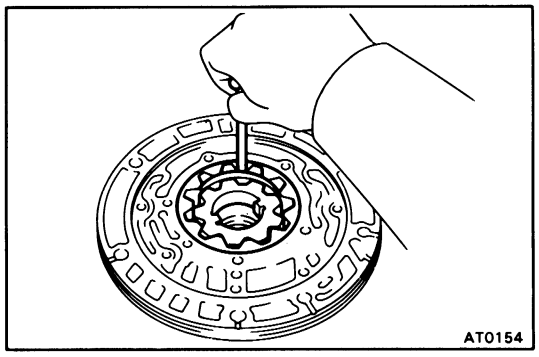

2. CHECK TIP CLEARANCE OF BOTH GEARS

Measure between the gear teeth and the crescent-shaped part of the pump body.

Standard tip clearance: 0.11 – 0.14 mm (0.0043 – 0.0055 in.)
Maximum tip clearance: 0.3 mm (0.012 in.)

If the tip clearance is greater than the maximum, replace the drive gear, driven gear or pump body.

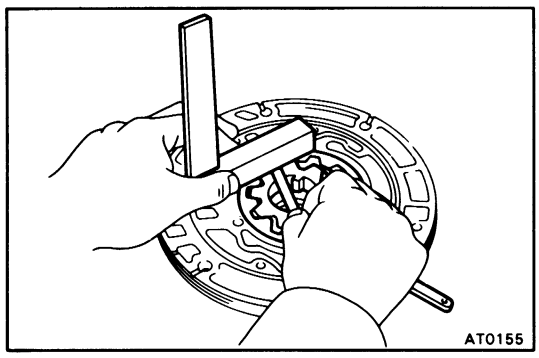

3. CHECK SIDE CLEARANCE OF BOTH GEARS

Using a steel straightedge and a feeler gauge, measure the side clearance of both gears.

Standard side clearance: 0.02 – 0.05 mm (0.0008 – 0.0020 in.)
Maximum side clearance: 0.1 mm (0.004 in.)

If the side clearance is greater than the maximum, replace the drive gear, driven gear or pump body.

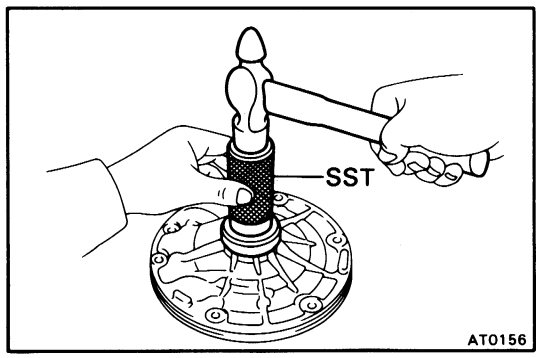

4. INSPECT FRONT OIL SEAL

Check for wear, damage or cracks.

5. IF NECESSARY, REPLACE FRONT OIL SEAL

(a) Pry off the oil seal with a screwdriver.

(b) Using SST and a hammer, install a new oil seal. The seal end should be flush with the outer edge of the pump body.

SST 09350-32014 (09351-32140)

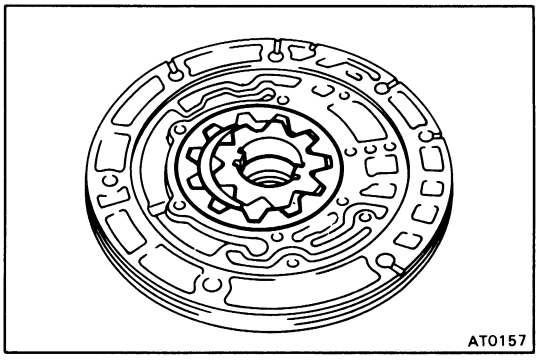

ASSEMBLY OF OIL PUMP
(See page AT-67)

1. INSTALL DRIVEN GEAR AND DRIVE GEAR

Make sure the top of the gears are facing upward.

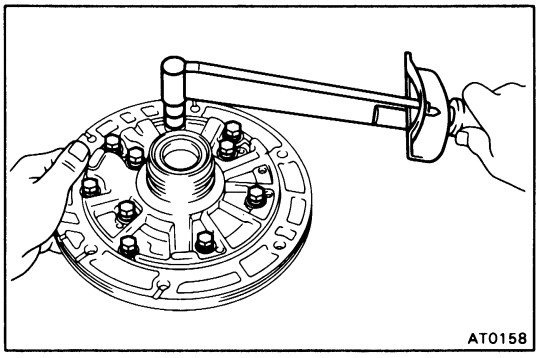

2. INSTALL STATOR SHAFT ONTO PUMP BODY

Align the stator shaft with each bolt hole.

3. TIGHTEN ELEVEN BOLTS

Torque: 100 kg-cm (7 ft-lb, 10 N·m)

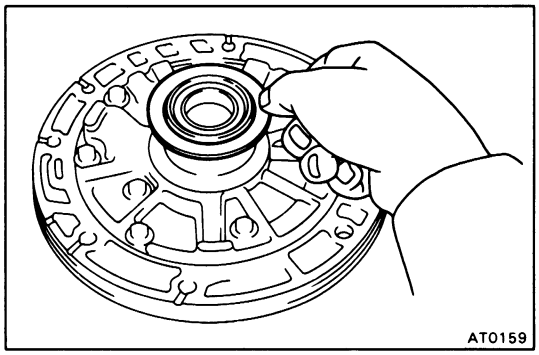

4. INSTALL THRUST WASHER

(a) Coat the thrust washer with petroleum jelly.

(b) Align the tab of the washer with the hollow of the pump body.

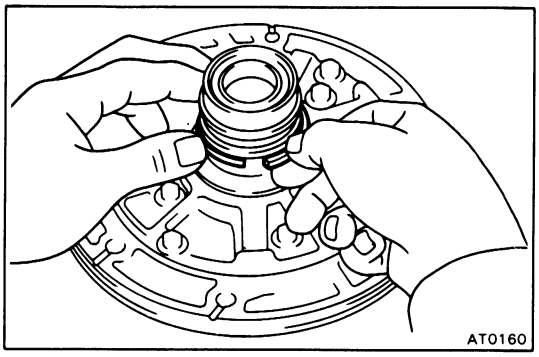

5. INSTALL THE TWO OIL SEAL RINGS ON OIL PUMP

CAUTION: Do not spread the ring ends too much.

NOTE: After installing the oil seal rings, check that they move smoothly.

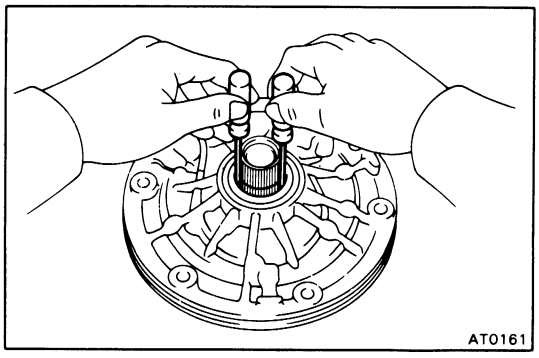

6. CHECK PUMP DRIVE GEAR ROTATION

Turn the drive gear with two screwdrivers and make sure that it rotates smoothly.

7. INSTALL NEW O-RING

8. INSTALL RACE ONTO STATOR SHAFT

Direct Clutch

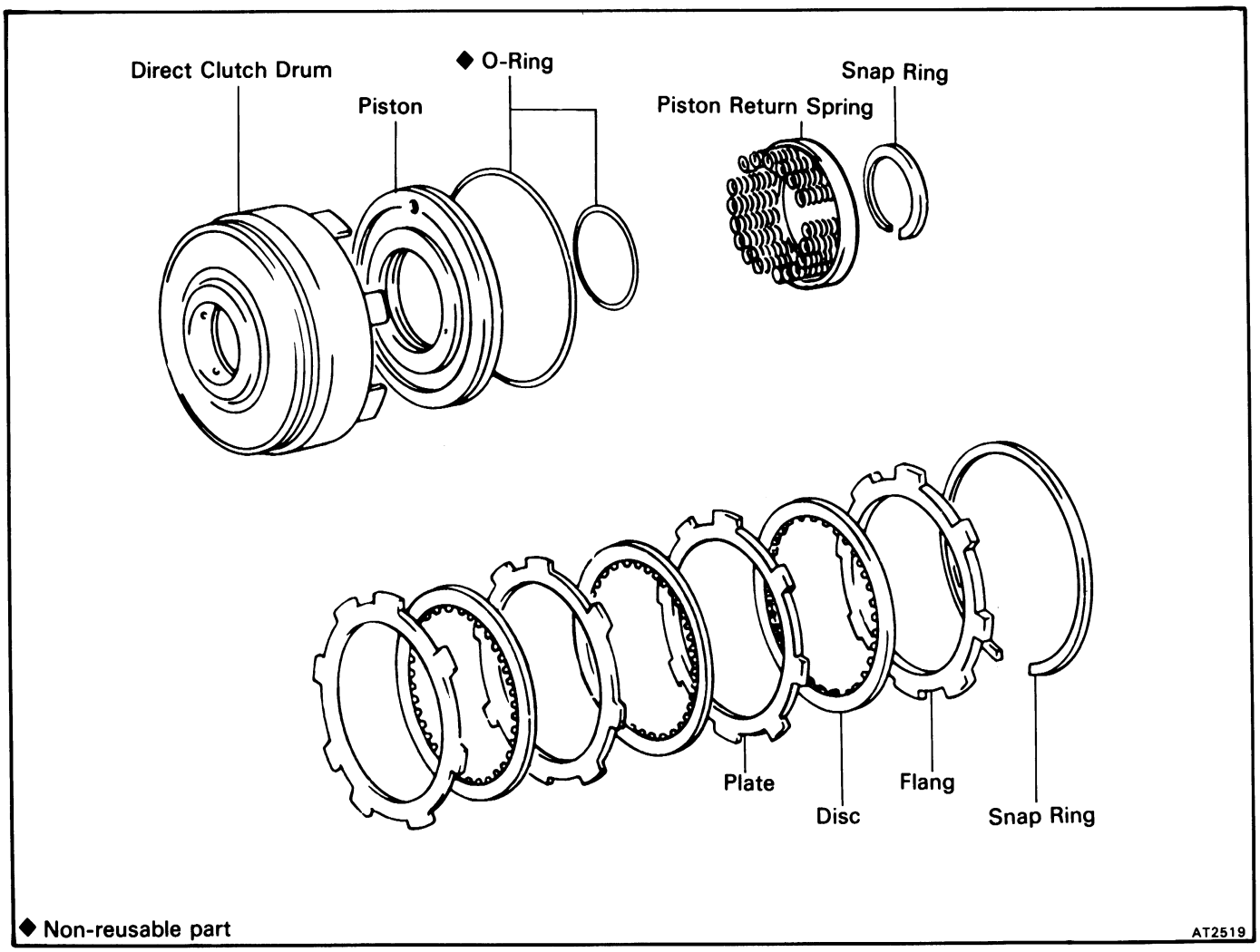

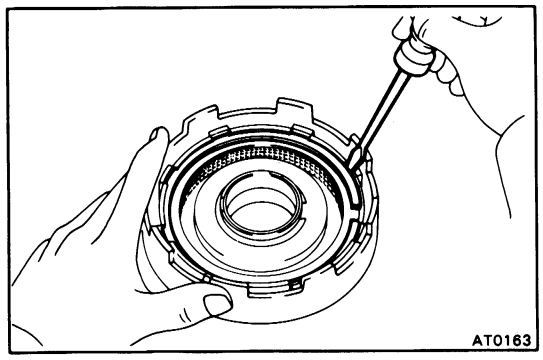

DISASSEMBLY OF DIRECT CLUTCH

1. **REMOVE SNAP RING FROM CLUTCH DRUM**
2. **REMOVE FLANGE, DISCS AND PLATES**

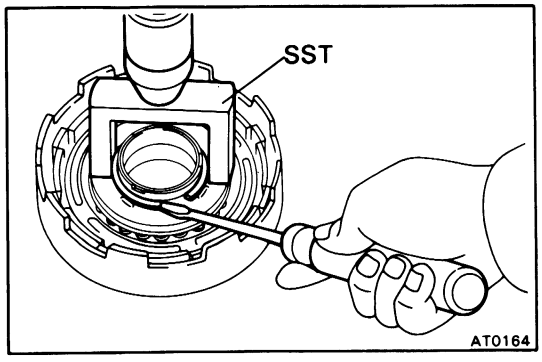

3. **COMPRESS PISTON RETURN SPRING AND REMOVE SNAP RING**

   Place SST on the spring retainer and compress the spring with a press. Using a screwdriver, remove the snap ring.

   SST 09350-32014 (09351-32070)

4. **REMOVE PISTON RETURN SPRING**

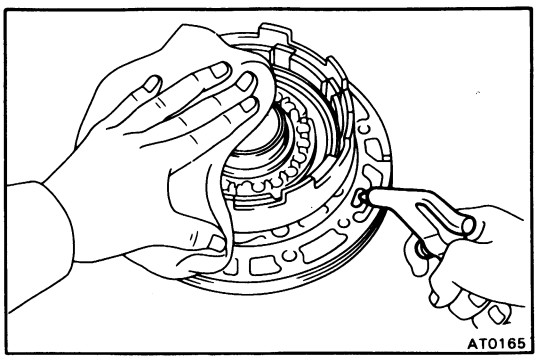

5. ASSEMBLE DIRECT CLUTCH ON OIL PUMP AND BLOW OUT PISTON

(a) Slide the direct clutch onto the oil pump.

(b) Apply compressed air to the oil pump to remove the piston. (If the piston does not come out completely, use needle-nose pliers to remove it.)

(c) Remove the direct clutch from the oil pump.

6. REMOVE CLUTCH PISTON O-RING

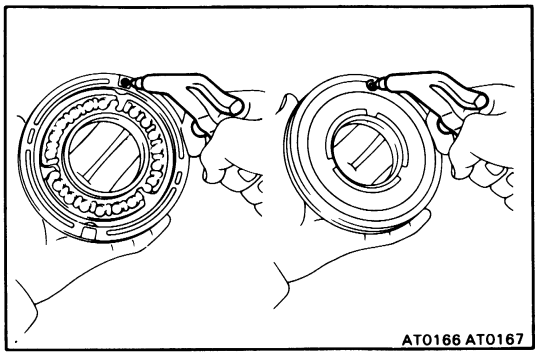

INSPECTION OF DIRECT CLUTCH

1. INSPECT CLUTCH PISTON

(a) Check that check ball is free by shaking the piston.

(b) Check that the valve does not leak by applying low-pressure compressed air.

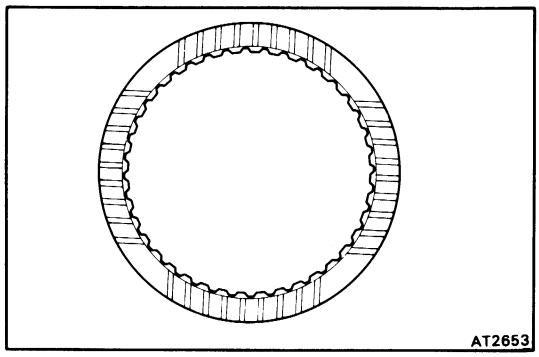

2. INSPECT DISC, PLATE AND FLANGE

Check that the sliding surface of the discs are not worn or burnt.
If the disc is worn or burnt, replace all discs.
Then check that the sliding surfaces of plate and flange are not worn or burnt.
If necessary, replace them.

NOTE: Do not allow the discs to dry out.
Prepare new discs by soaking them at least two hours in ATF.

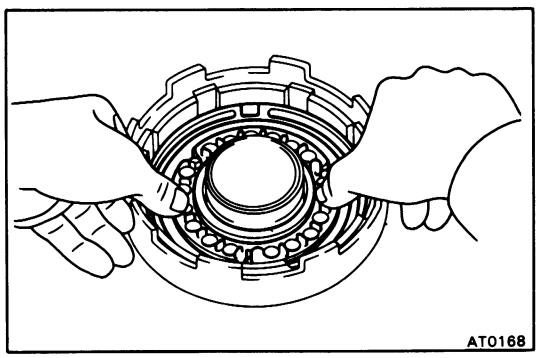

ASSEMBLY OF DIRECT CLUTCH

(See page AT-70)

1. INSTALL CLUTCH PISTON IN DIRECT CLUTCH DRUM

(a) Install new O-rings on the piston. Coat the O-rings with ATF

(b) Being careful not to damage the O-ring, press the piston into the drum with the cup side up.

2. INSTALL PISTON RETURN SPRING AND SET SNAP RING IN PLACE

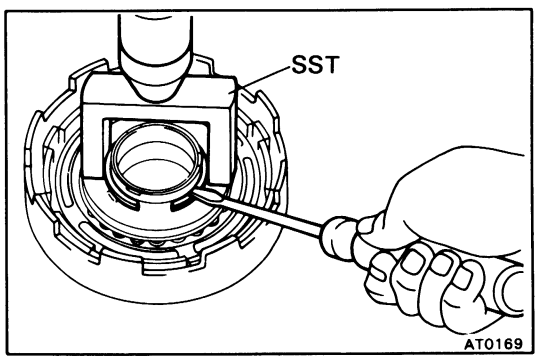

3. COMPRESS RETURN SPRING AND INSTALL SNAP RING IN GROOVE

(a) Place SST on the spring retainer, and compress the spring with a press.

SST 09350-32014 (09351- 32070)

(b) Install the snap ring with a screwdriver.
Be sure the end gap of snap ring is not aligned with the spring retainer claw.

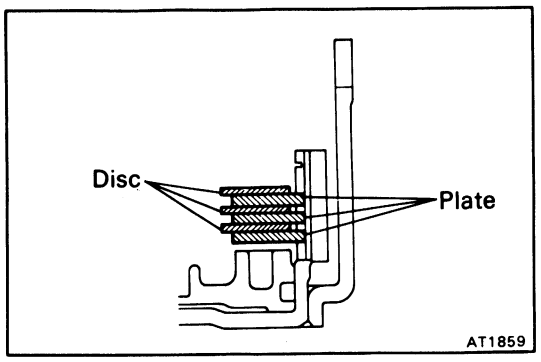

4. INSTALL PLATES, DISCS AND FLANGE

Install in order:

Plate-disc-plate-disc-plate-disc

Install the flange with the flat end facing downward.

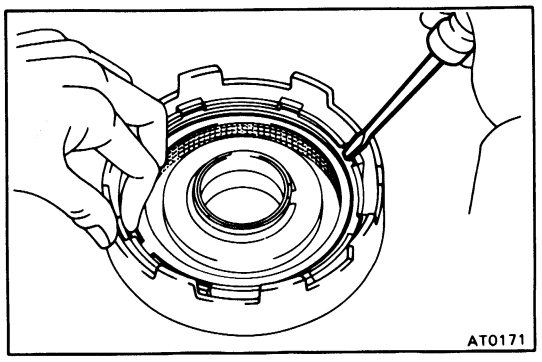

5. INSTALL OUTER SNAP RING

Check that the end gap of the snap ring is not aligned with one of the cutouts.

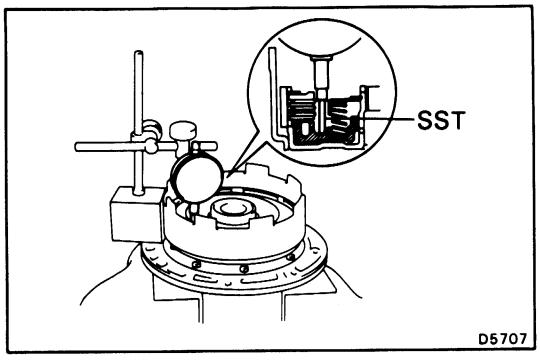

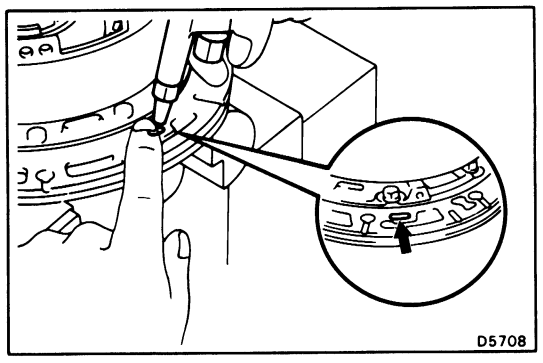

6. CHECK PISTON STROKE OF DIRECT CLUTCH

If replacing the disc, plate or flange, check the piston stroke.

(a) Install the direct clutch on the oil pump.

(b) Using a dial indicator (long type pick or SST), measure the direct clutch piston stroke applying and releasing the compressed air (4 – 8 kg/cm^2, 57 – 114 psi or 392 – 785 kPa) as shown.

SST 09350-32014 (09351-32190)

Piston stroke:

1.13 – 1.50 mm (0.0445 – 0.0591 in.)

If the piston stroke is less than the limit, parts may be misassembled and reinstall them.

If the piston stroke nonstandard, select another flange.

NOTE: There are two different flange the thickness.

Flange thickness: 2.60 mm (0.1024 in.)
3.00 mm (0.1181 in.)

Forward Clutch

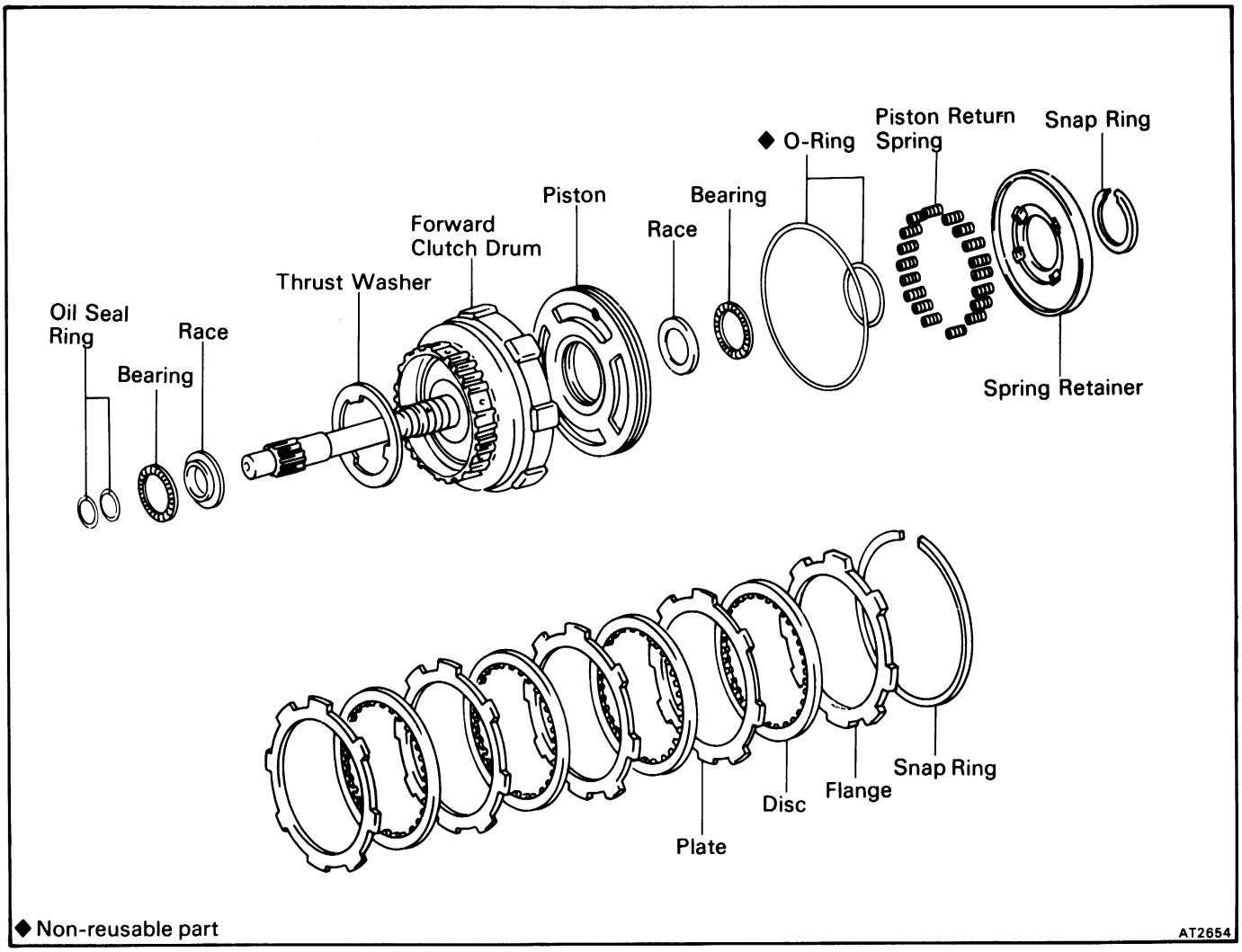

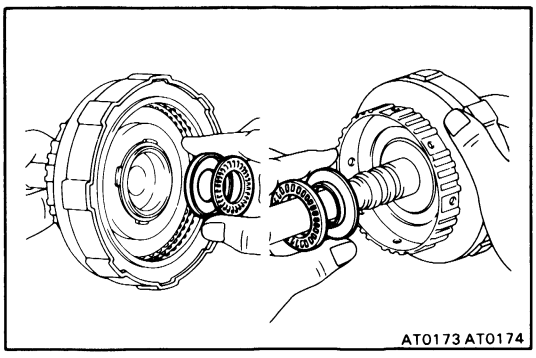

DISASSEMBLY OF FORWARD CLUTCH

1. **REMOVE THRUST BEARINGS AND RACES FROM BOTH SIDES OF CLUTCH**

   Note the position of the races.

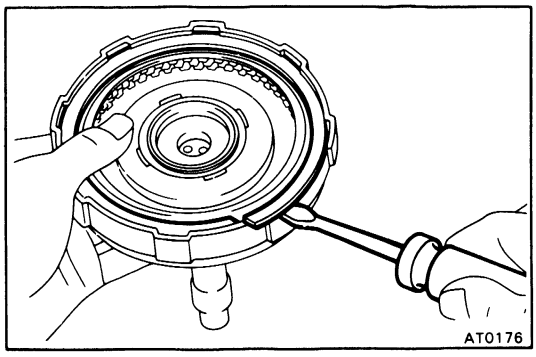

2. **REMOVE SNAP RING FROM CLUTCH DRUM**
3. **REMOVE FLANGE, DISCS AND PLATES**

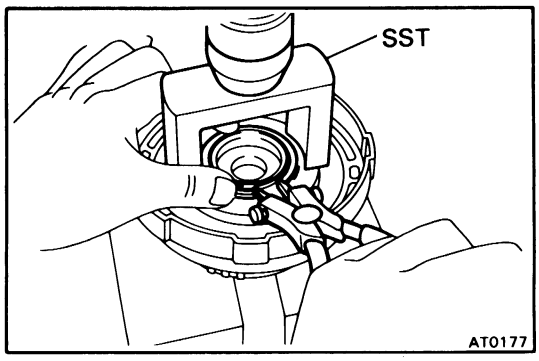

4. COMPRESS PISTON RETURN SPRINGS AND REMOVE SNAP RING

(a) Place SST on the spring retainer and compress the springs with a press.

SST 09350-32014 (09351-32070)

(b) Remove the snap ring with snap ring pliers.

5. REMOVE SPRING RETAINER AND THE EIGHTEEN SPRINGS

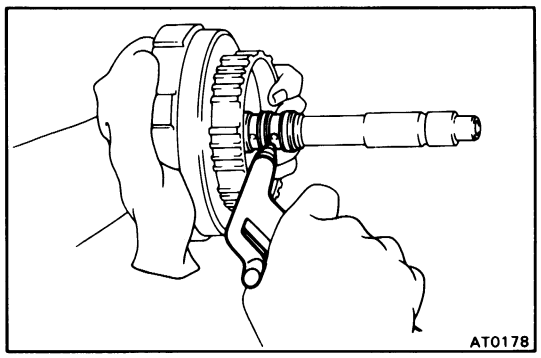

6. BLOW OUT PISTON

Apply compressed air into the oil passage to remove the piston.
If the piston does not come out, use needle-nose pliers to remove it.

INSPECTION OF FORWARD CLUTCH

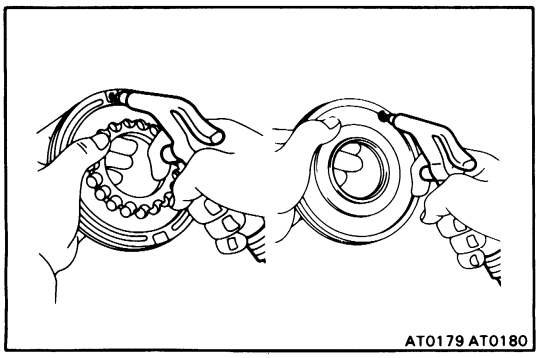

1. INSPECT CLUTCH PISTON

(a) Check that the check ball is free by shaking the piston.

(b) Check that the valve does not leak by applying low-pressure compressed air.

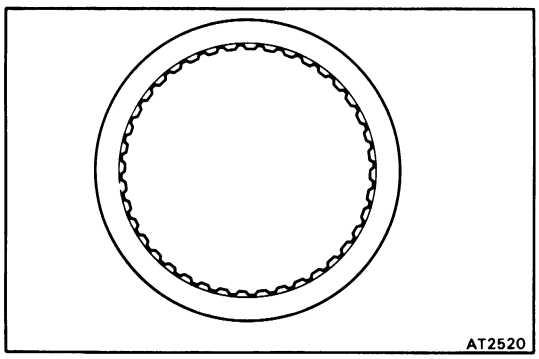

2. INSPECT DISC, PLATE AND FLANGE

Check that the sliding surfaces of discs are worn or burnt.
If the disc is worn or burnt, replace all discs.
Then check that the sliding surfaces of plate and flange are not worn or burnt.
If necessary, replace them.

NOTE: Do not allow the discs to dry out.
Prepare new discs by soaking them at least two hours in ATF.

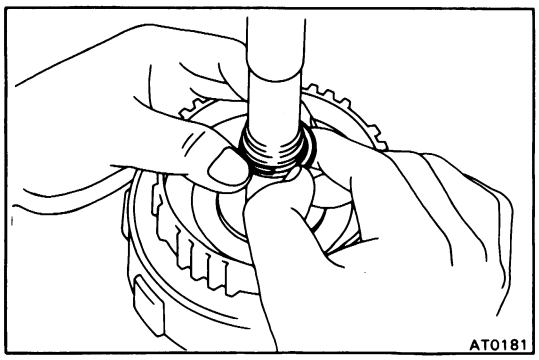

3. REPLACE OIL SEAL RINGS

(a) Remove the oil seal rings.

(b) Spread the rings apart and install them into the groove.

CAUTION: Do not spread the ring ends more than necessary.

NOTE: After installing the oil seal rings, check that they move smoothly.

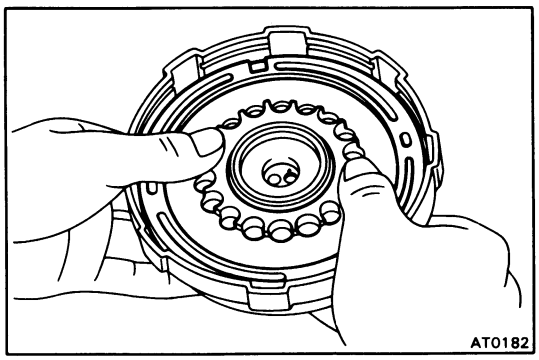

ASSEMBLY OF FORWARD CLUTCH

(See page AT-73)

1. INSTALL NEW O-RINGS ON PISTON

Coat the O-ring with ATF.

2. INSTALL PISTON IN FORWARD CLUTCH DRUM

Press the piston into the drum with the cup side up, being careful not to damage the O-ring.

3. INSTALL THE EIGHTEEN PISTON RETURN SPRINGS, SPRING RETAINER AND SNAP RING IN PLACE

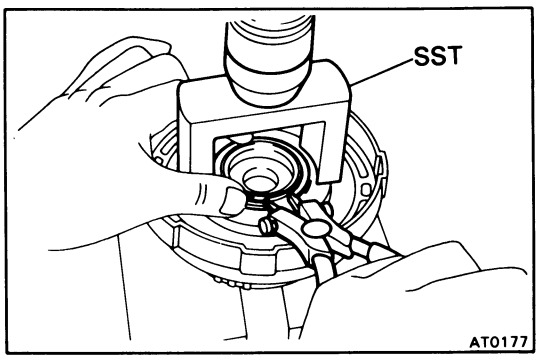

4. COMPRESS RETURN SPRINGS AND INSTALL SNAP RING IN GROOVE

(a) Place SST on the spring retainer, and compress the springs with a press.

SST 09350-32014 (09351-32070)

(b) Install the snap ring. Be sure the end gap of snap ring is not aligned with the spring retainer claw.

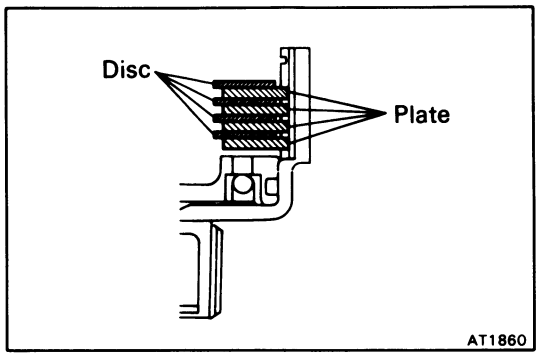

5. INSTALL PLATES, DISCS AND FLANGE

Install in order:

Plate-disc-plate-disc-plate-disc-plate-disc

Install the flange with the flat end facing downward.

6. INSTALL OUTER SNAP RING

Check that the end gap of snap ring is not aligned with one of the cutouts.

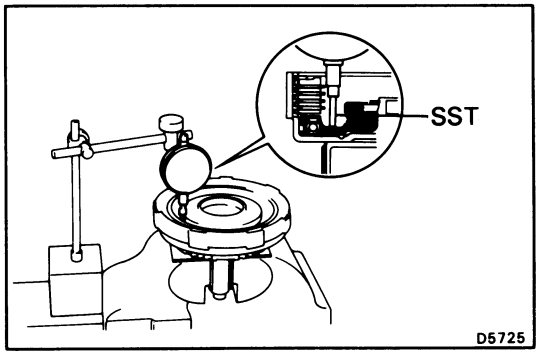

7. CHECK PISTON STROKE OF FORWARD CLUTCH

If replacing the disc, plate or flange, check the piston stroke.

Using a dial indicator (long type pick or SST), measure the forward clutch piston stroke applying and releasing the compressed air (4 – 8 kg/cm^2, 57 – 114 psi or 392 – 785 kPa) as shown.

SST 09350-32014 (09351-32190)

Piston stroke:

1.42 – 1.81 mm (0.0559 – 0.0713 in.)

If the piston stroke is less than the limit, parts may be misassembled and reinstall them. If the piston stroke non-standard, select another flange.

NOTE: There are two different flange thickness.

Flange thickness: 3.00 mm (0.1181 in.)
3.37 mm (0.1327 in.)

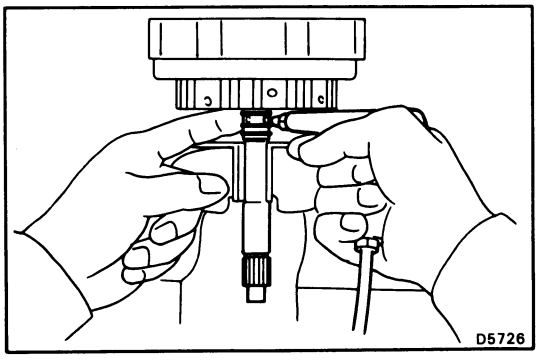

8. INSTALL THRUST WASHER, RACES AND BEARINGS

No. 1 One-Way Clutch and Sun Gear

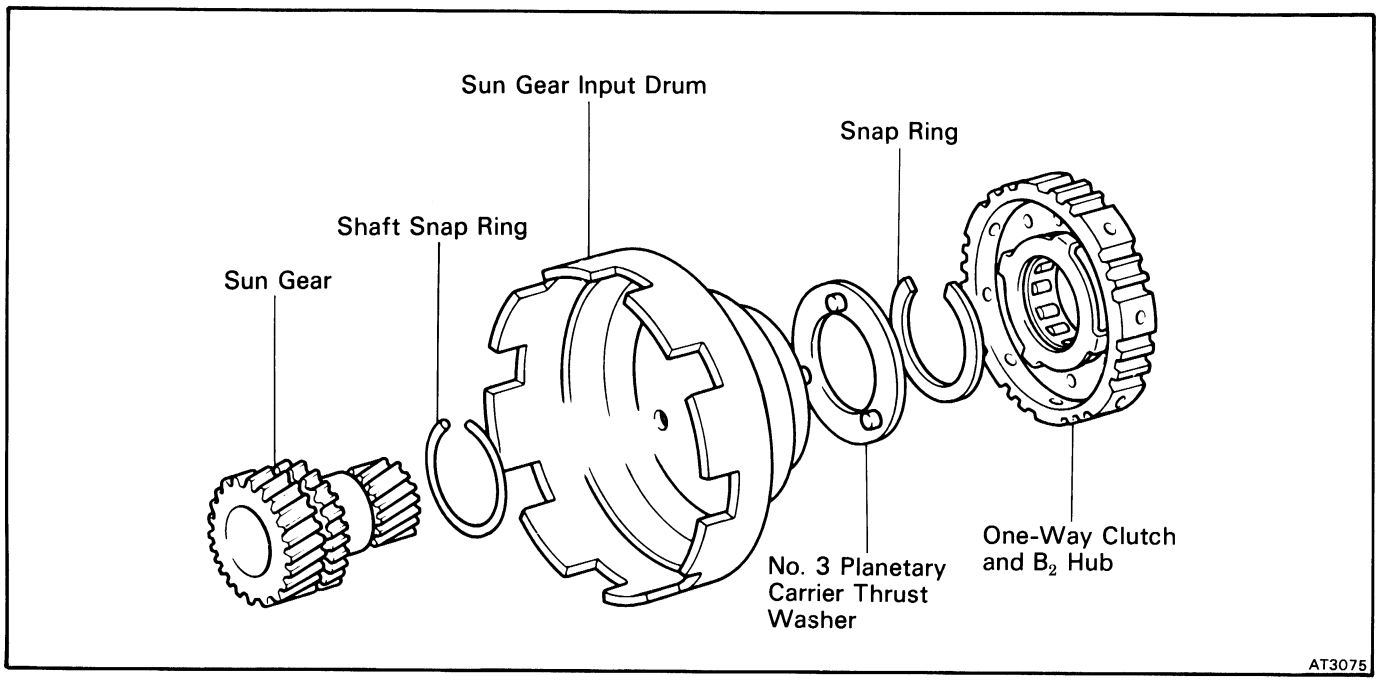

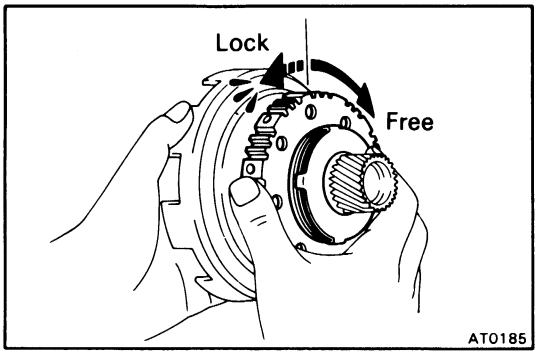

DISASSEMBLY OF NO. 1 ONE-WAY CLUTCH AND SUN GEAR

1. CHECK OPERATION OF ONE-WAY CLUTCH

Hold the sun gear and turn the hub.
The hub should turn freely clockwise and should lock counterclockwise.

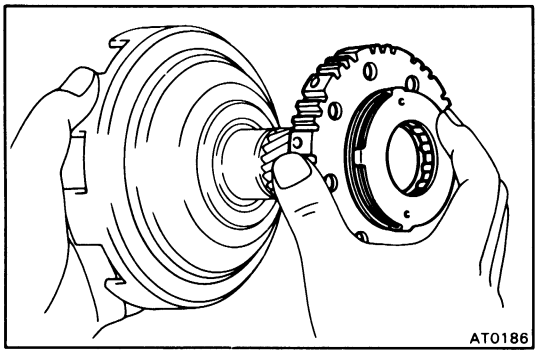

2. REMOVE SECOND BRAKE HUB AND ONE-WAY CLUTCH FROM SUN GEAR

While turning the hub clockwise, remove the one-way clutch from the sun gear.

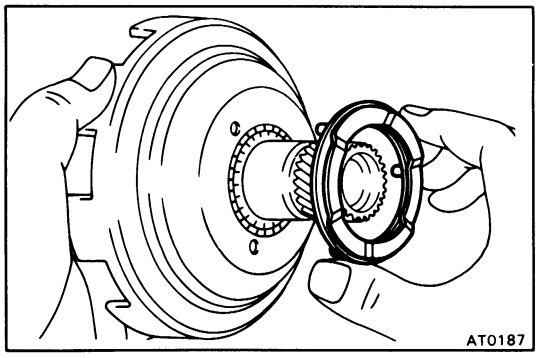

3. REMOVE NO. 3 PLANETARY CARRIER THRUST WASHER FROM SUN GEAR INPUT DRUM

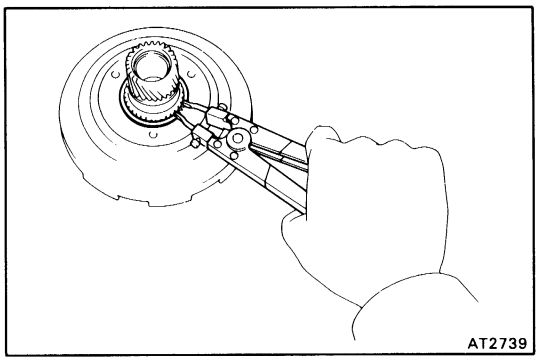

4. REMOVE SUN GEAR FROM DRUM

(a) Using the snap ring pliers, remove the snap ring from the drum.

(b) Remove the sun gear from the drum.

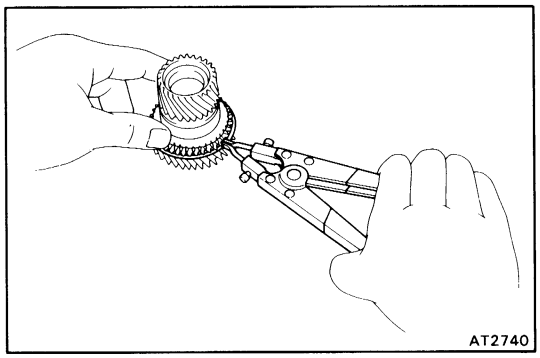

5. REMOVE SHAFT SNAP RING

Using the snap ring pliers, remove the shaft snap ring from the sun gear.

ASSEMBLY OF NO. 1 ONE-WAY CLUTCH AND SUN GEAR

1. INSTALL SHAFT SNAP RING TO SUN GEAR

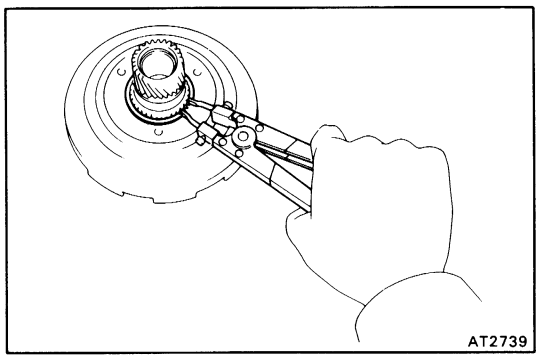

2. INSTALL SUN GEAR TO DRUM

(a) Install the sun gear to the drum.

(b) Using the snap ring pliers, install the snap ring to the drum.

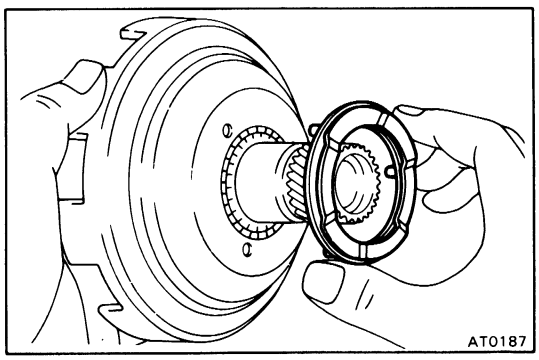

3. INSTALL THRUST WASHER TO SUN GEAR INPUT DRUM

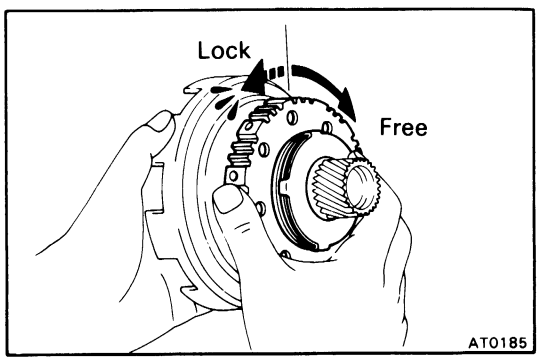

4. INSTALL ONE-WAY CLUTCH AND SECOND BRAKE HUB ON SUN GEAR

While turning the hub clockwise, slide the one-way clutch onto the sun gear.

5. RECHECK OPERATION OF NO. 1 ONE-WAY CLUTCH

No. 2 One-Way Clutch and Rear Planetary Gear

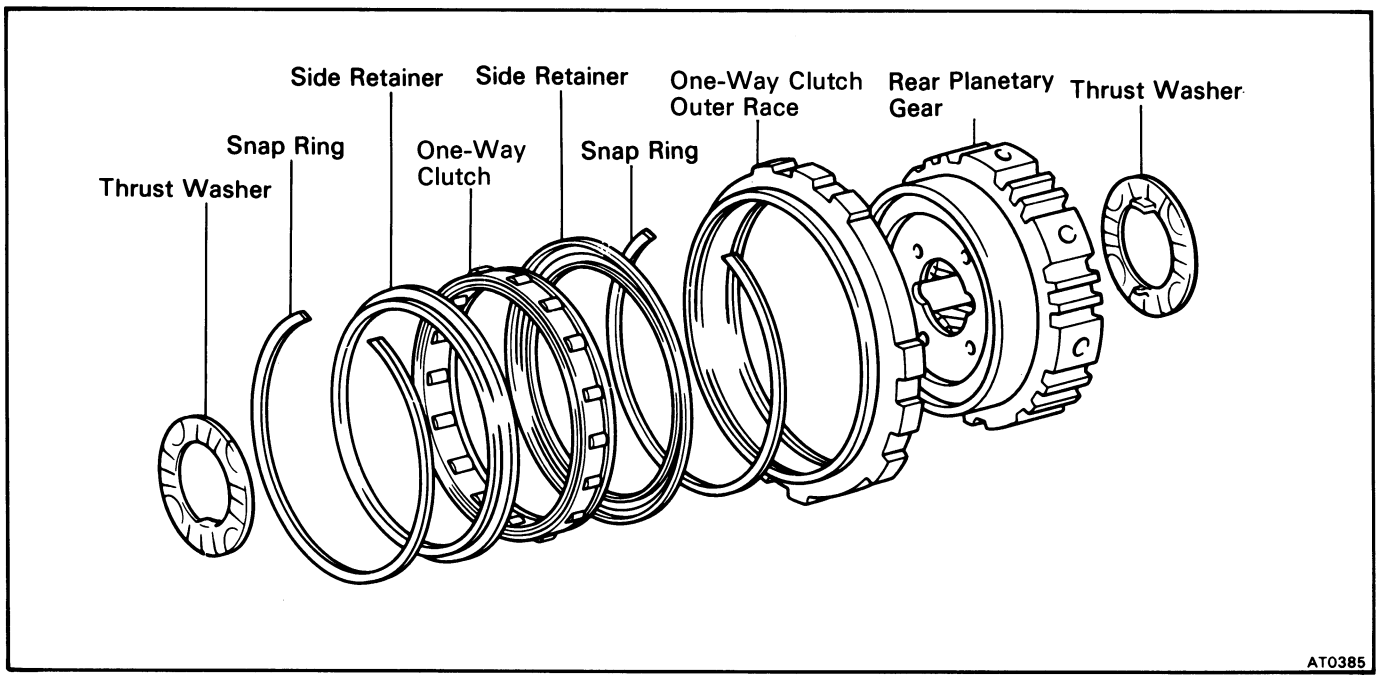

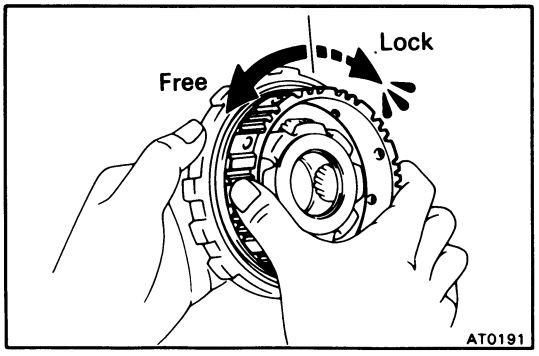

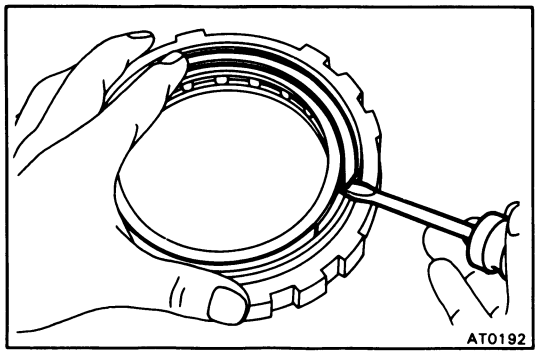

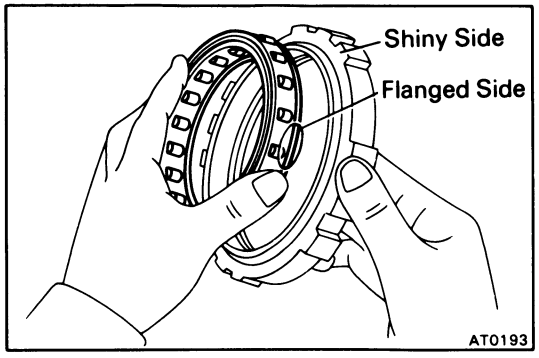

DISASSEMBLY OF ONE-WAY CLUTCH

1. **CHECK OPERATION OF ONE-WAY CLUTCH**

   Hold the outer race and turn the hub.
   The hub should turn freely counterclockwise and should lock clockwise.

2. **REMOVE NO. 2 PLANETARY CARRIER THRUST WASHER FROM BOTH SIDES OF CARRIER**

3. **DISASSEMBLE ONE-WAY CLUTCH**

   Remove the hub and the planetary gear from the one-way clutch.

4. **REMOVE SNAP RING ON BOTH SIDES AND TWO SIDE RETAINERS**

5. **REMOVE ONE-WAY CLUTCH FROM OUTER RACE**

ASSEMBLY OF ONE-WAY CLUTCH

1. **INSTALL ONE-WAY CLUTCH**

   Install the one-way clutch into the outer race, facing the flanged side of the one-way clutch toward the shiny side of the outer race.

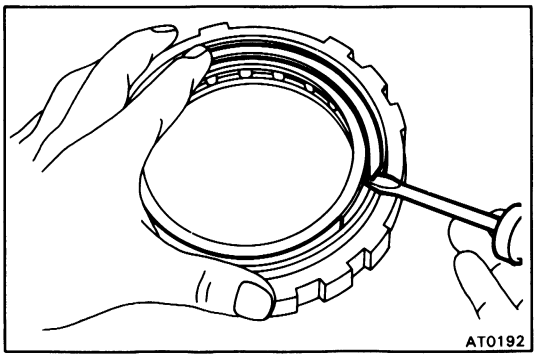

2. INSTALL BOTH RETAINERS AND TWO SNAP RINGS

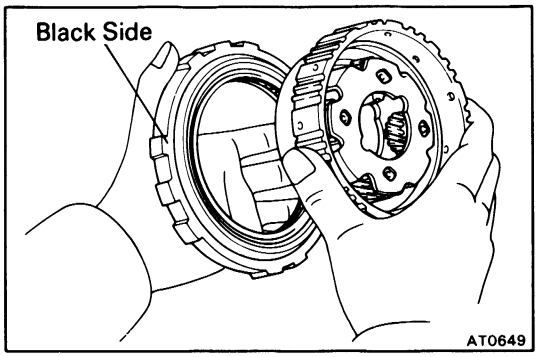

3. INSTALL REAR PLANETARY GEAR INTO ONE-WAY CLUTCH

Install the planetary gear into the one-way clutch, facing the inner race of planetary gear toward the black side of the one-way clutch outer race.

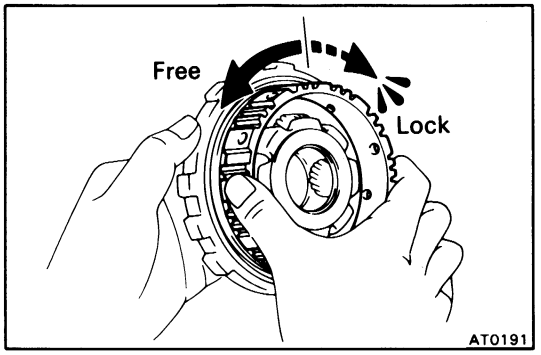

4. CHECK OPERATION OF ONE-WAY CLUTCH

5. INSTALL NO. 2 PLANETARY CARRIER THRUST WASHERS ONTO BOTH SIDES OF CARRIER

(a) Coat the thrust washers with petroleum jelly.

(b) Align the tab of the washers with the hollow of the carrier.

First and Reverse Brake Piston

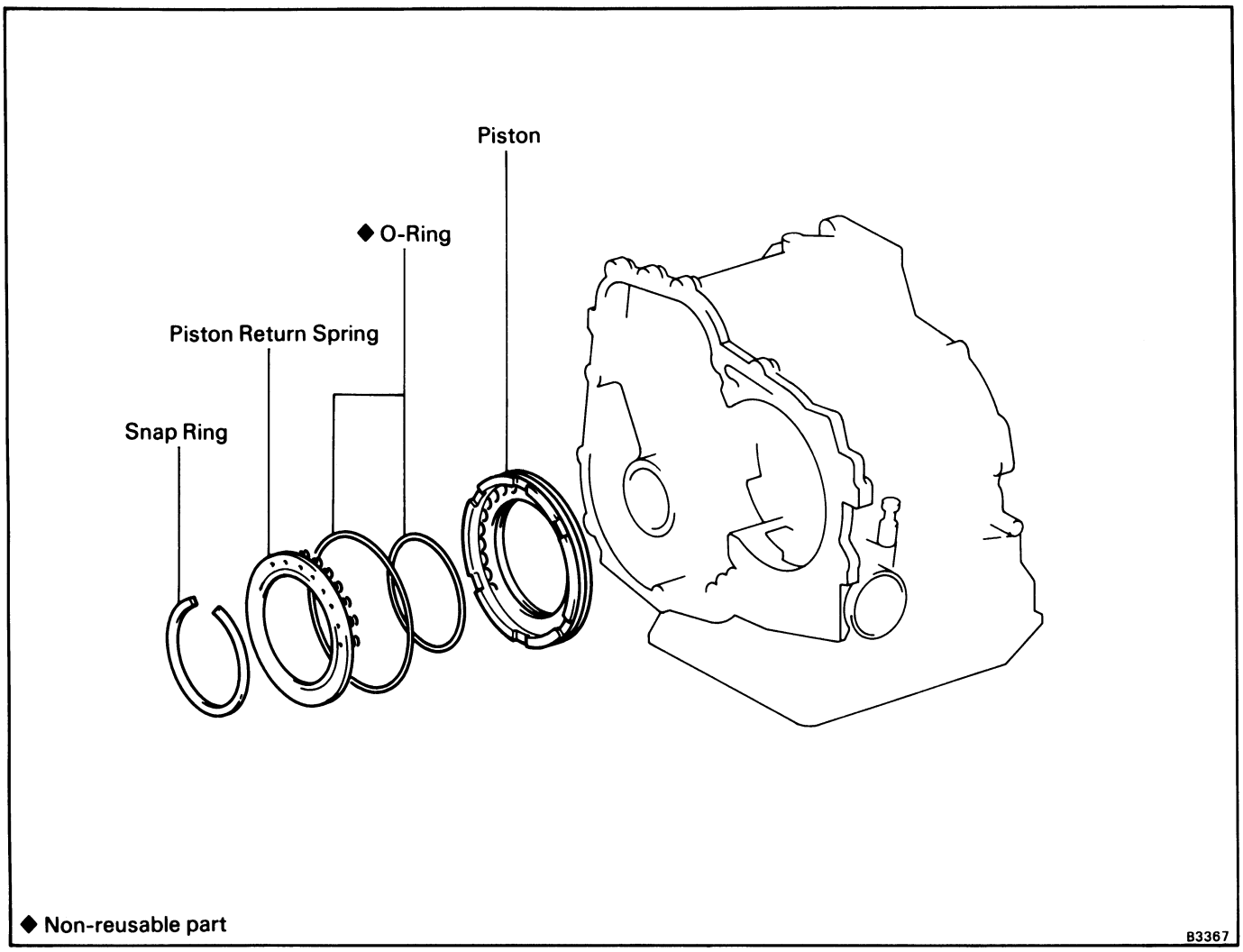

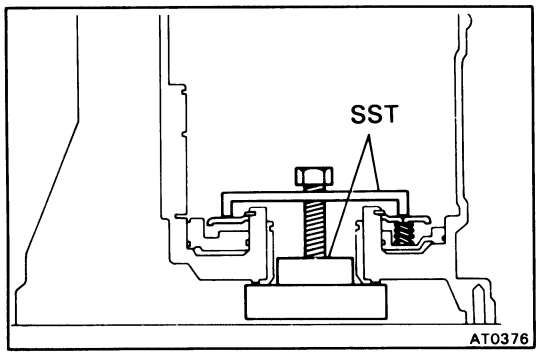

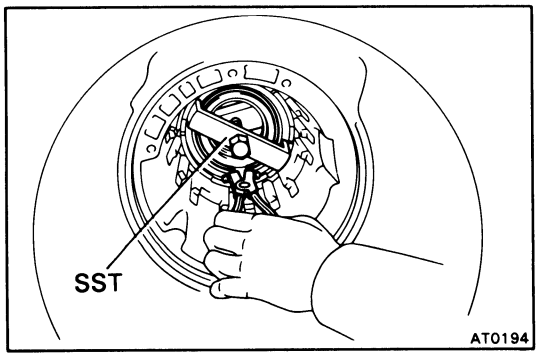

DISASSEMBLY OF FIRST AND REVERSE BRAKE PISTON

1. COMPRESS RETURN SPRINGS AND REMOVE SPRING RETAINER SNAP RING

(a) Install SST. Tighten the bolt gradually and evenly to compress the springs with SST.

SST 09350-32014 (09351-32040)

(b) Using snap ring pliers, remove the snap ring.

(c) Remove SST.

SST 09350-32014 (09351-32040)

2. REMOVE SNAP RING AND RETURN SPRING ASSEMBLY

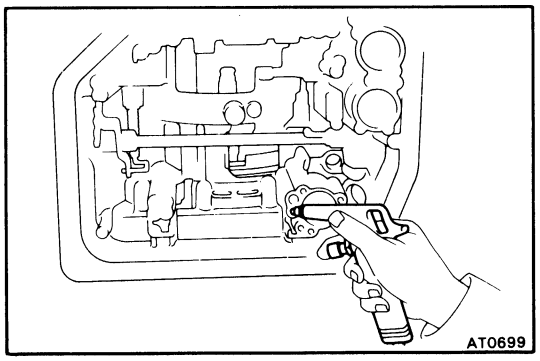

3. **REMOVE PISTON FROM TRANSMISSION CASE WITH COMPRESSED AIR**

   (a) Apply compressed air into the oil passage of the case to remove the piston.

   NOTE: Hold the piston so it is not slanted and then blow with the gun slightly away from the oil hole.

   (b) If the piston does not pop out with compressed air, use needle-nose pliers to remove it.

4. **REMOVE O-RINGS FROM PISTON**

ASSEMBLY OF FIRST AND REVERSE BRAKE PISTON

(See page AT-80)

1. **INSTALL NEW O-RINGS ON PISTON**

   Coat the O-rings with ATF.

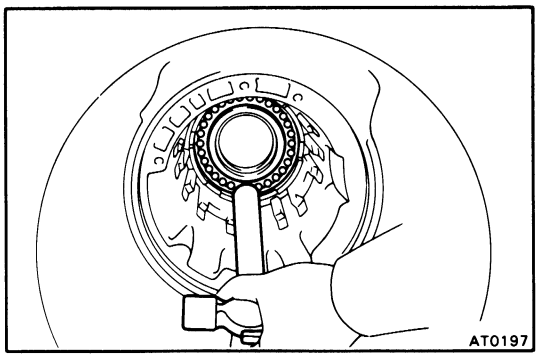

2. **INSTALL PISTON IN TRANSMISSION CASE**

   Push the piston into the bore of the case, facing the spring seats upward.

3. **PLACE SST BASE UNDER CASE**

   SST 09350-32014 (09351-32040)

4. **INSTALL PISTON RETURN SPRING ASSEMBLY, SST AND SNAP RING IN PLACE**

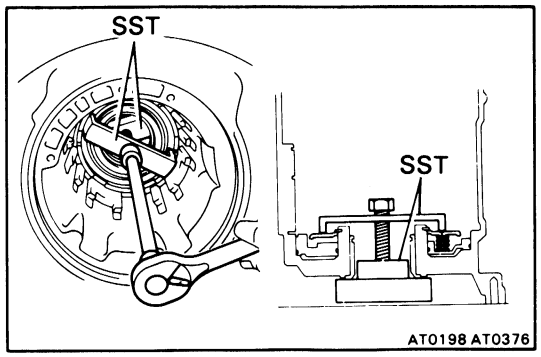

5. **COMPRESS PISTON RETURN SPRINGS TO ALLOW INSTALLATION OF SNAP RING**

   CAUTION: Avoid bending the spring retainer by overtightening the bolt.

   Gradually tighten the bolt to compress the springs, being careful not to damage the transmission case with SST.

   SST 09350-32014 (09351-32040)

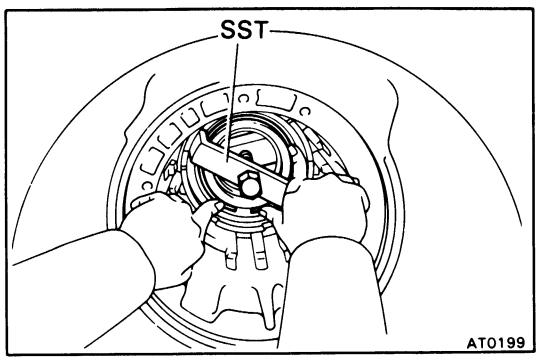

6. **INSTALL SNAP RING**

   (a) Push the ring into place with your fingers.
   Visually check to make sure it is fully seated and centered by the three lugs on the spring retainer.
   Be sure the end gap of snap ring is not aligned with the spring retainer claw.

   (b) Remove the SST.

   SST 09350-32014 (09351-32040)

Intermediate Shaft

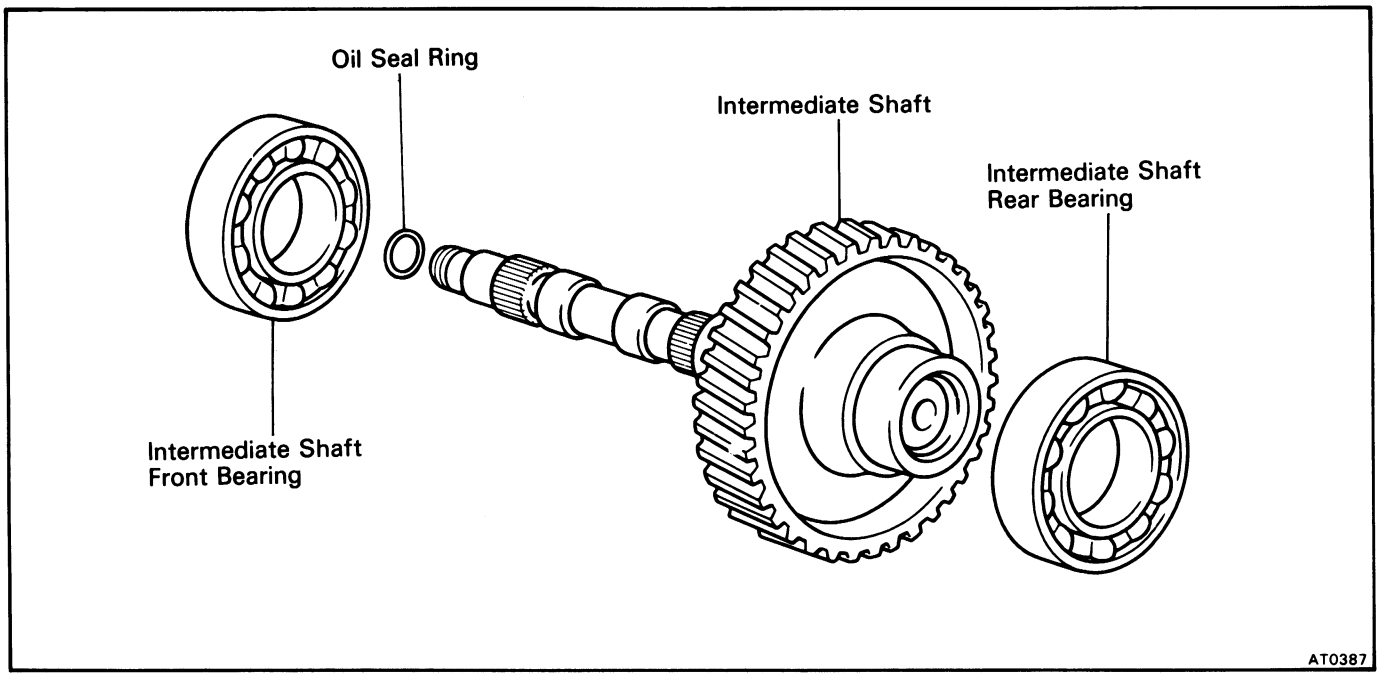

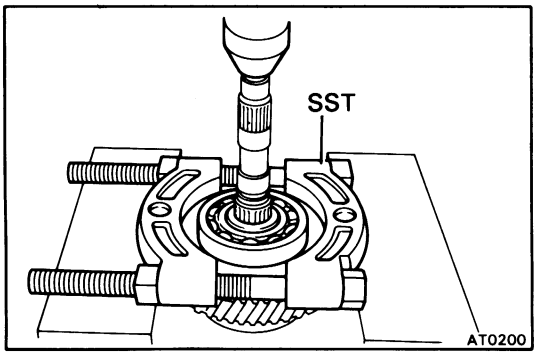

REPLACEMENT OF INTERMEDIATE SHAFT

1. **REMOVE INTERMEDIATE SHAFT FRONT BEARING**
   Using SST, press out the bearing.
   SST 09555-55010

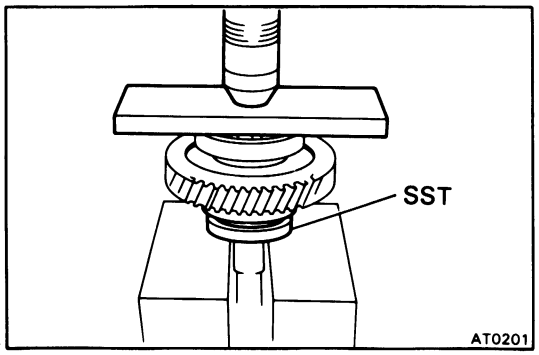

2. **INSTALL INTERMEDIATE SHAFT FRONT BEARING**
   Using SST, press in a new bearing.
   SST 09350-32014 (09351-32120)

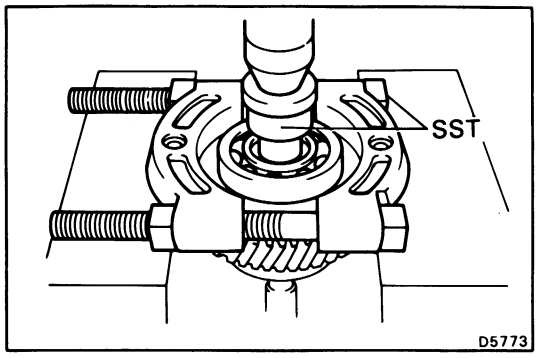

REPLACEMENT OF INTERMEDIATE SHAFT REAR BEARING

1. **REMOVE INTERMEDIATE SHAFT REAR BEARING**
   Using SST, press out the bearing.
   SST 09350-32014 (09351-32090) and 09555-55010

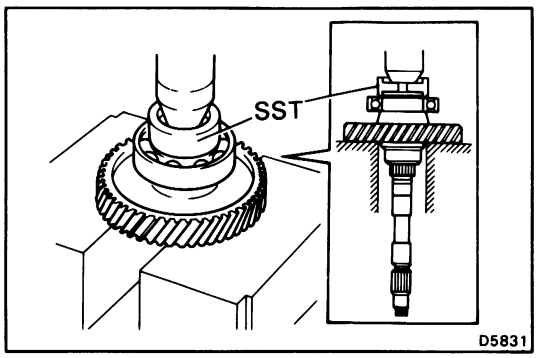

2. INSTALL INTERMEDIATE SHAFT REAR BEARING

(a) Using SST, press in a new bearing.

SST 09350-32014 (09351-32150)

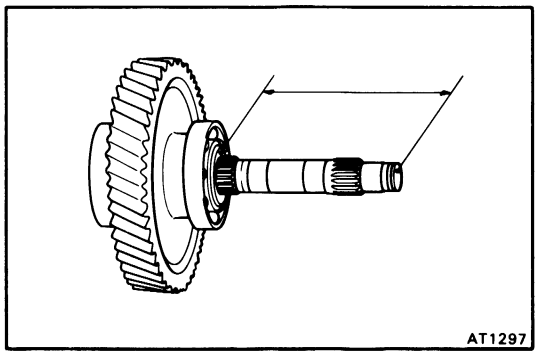

(b) Check that the distance from the gear flange end to the intermediate shaft end is about 115.8 mm (4.560 in.).

Counter Shaft

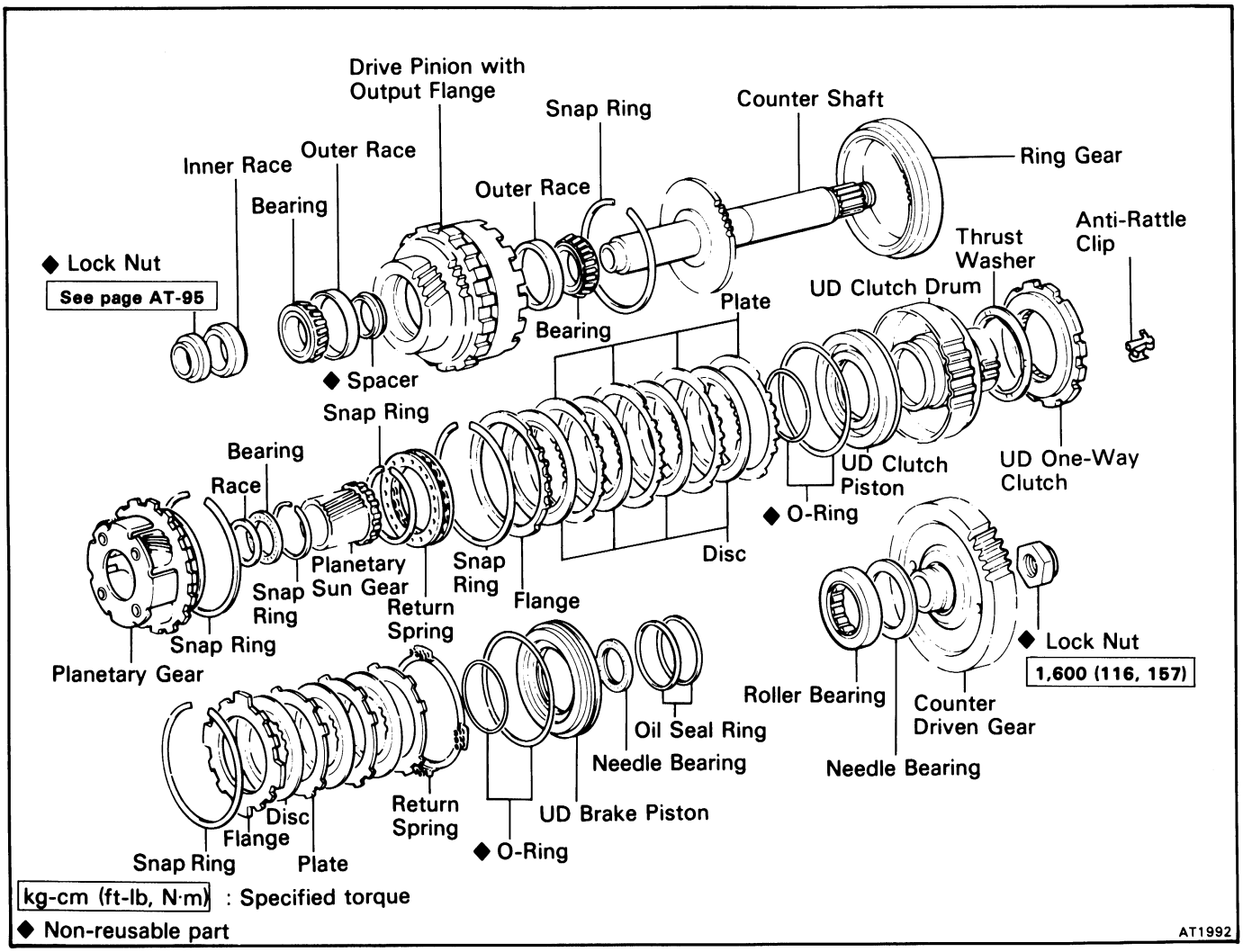

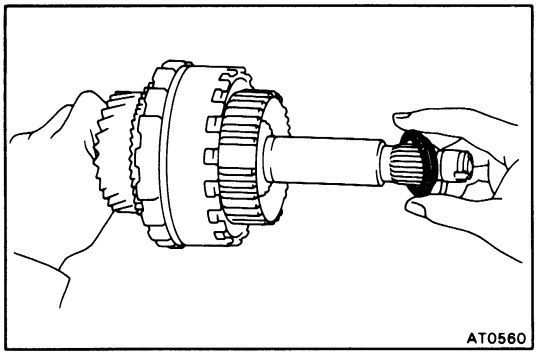

DISASSEMBLY OF COUNTER SHAFT

1. REMOVE BEARING

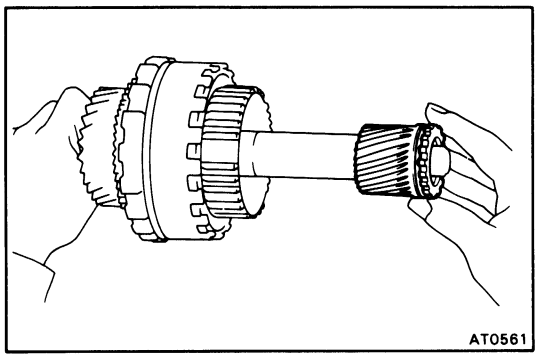

2. REMOVE UNDERDRIVE PLANETARY SUN GEAR FROM COUNTER SHAFT

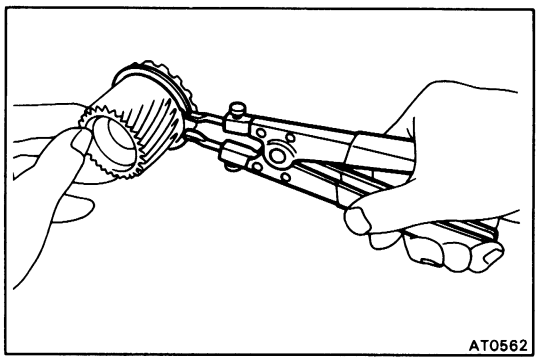

3. REMOVE SNAP RING FROM SUN GEAR WITH SNAP RING PLIERS

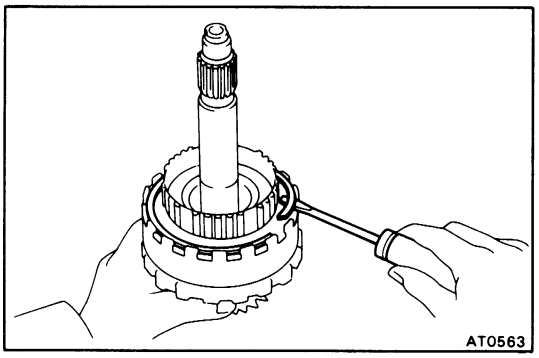

4. REMOVE SNAP RING FROM COUNTER SHAFT ASSEMBLY

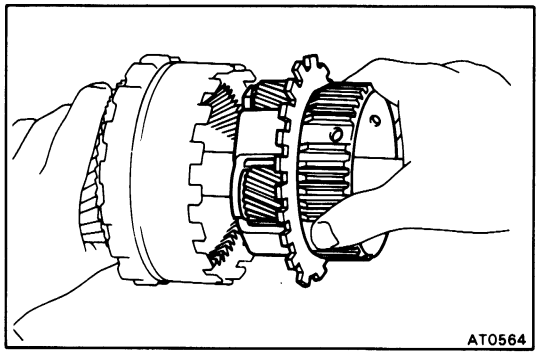

5. REMOVE UNDERDRIVE PLANETARY GEAR

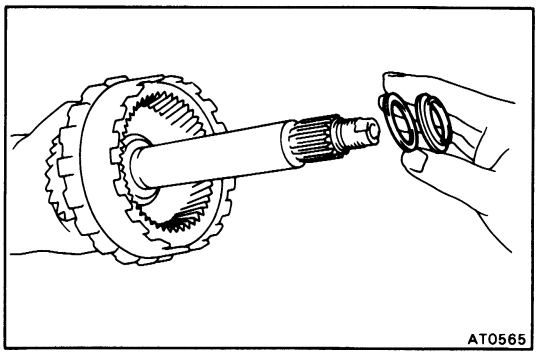

6. REMOVE THRUST NEEDLE BEARING AND RACE

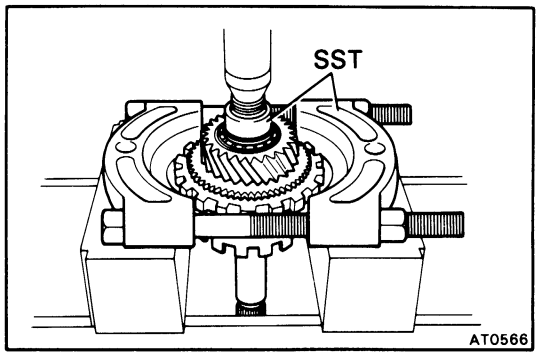

7. REMOVE DRIVE PINION WITH OUTPUT FLANGE, BEARING, INNER RACE AND SPACER

(a) Using SST and a press, remove the drive pinion with output flange, bearing and inner race.

SST 09350-32014 (09351-32150) and 09555-55010

(b) Remove the spacer.

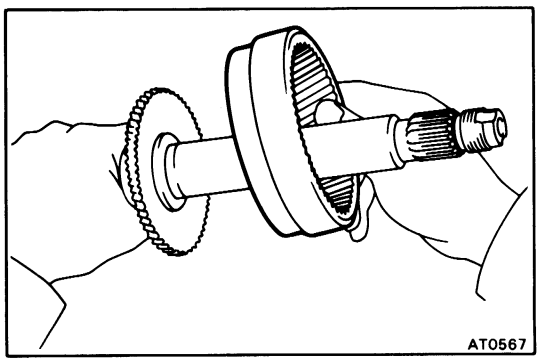

8. REMOVE SNAP RING

9. REMOVE RING GEAR

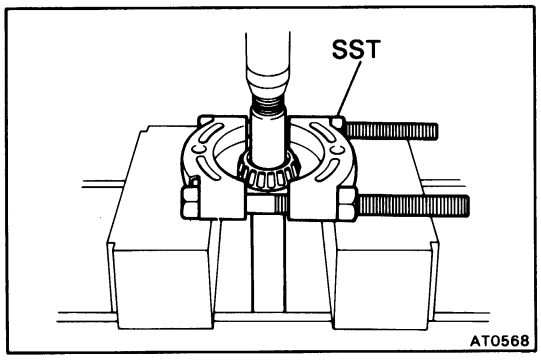

10. REMOVE BEARING

Using SST and a press, remove the bearing.

SST 09950-00020

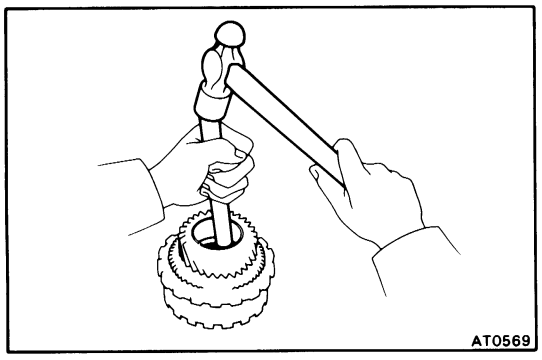

11. REMOVE BEARING OUTER RACE WITH BRASS BAR AND HAMMER

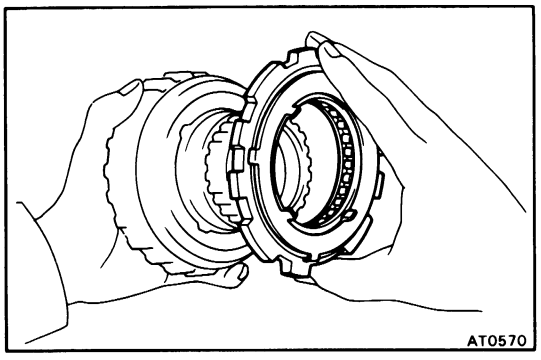

12. REMOVE UNDERDRIVE ONE-WAY CLUTCH FROM CLUTCH DRUM

13. REMOVE THRUST WASHER

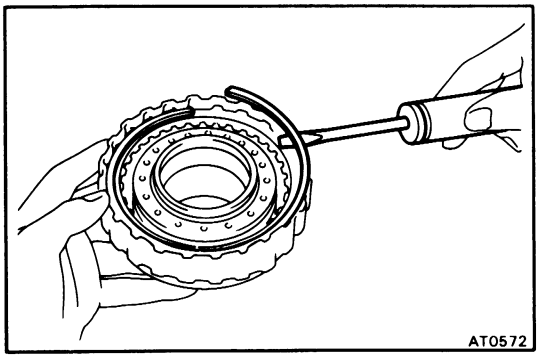

14. REMOVE SNAP RING

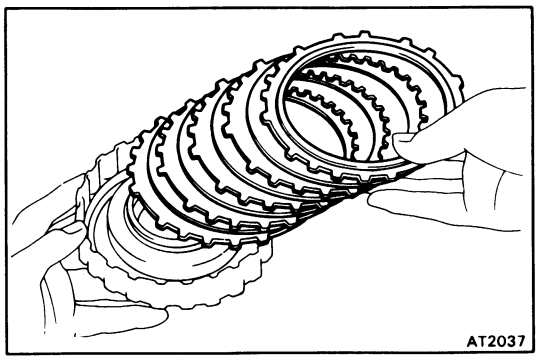

15. REMOVE FLANGE, DISCS AND PLATES

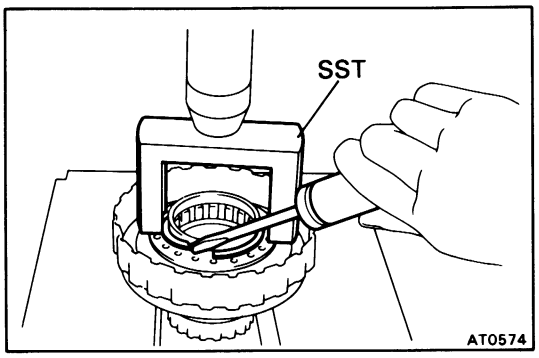

16. COMPRESS PISTON RETURN SPRING AND REMOVE SNAP RING

(a) Place SST on the spring retainer and compress the springs with a press.

SST 09350-32014 (09351-32070)

(b) Remove the snap ring.

17. REMOVE RETURN SPRING

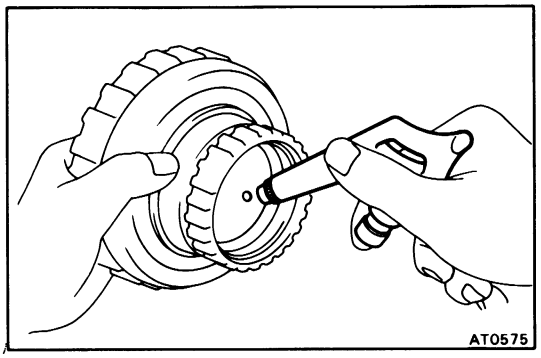

18. BLOW OUT PISTON

Apply compressed air into the oil passage to remove the piston.
If the piston does not come out, use needle-nose pliers to remove it.

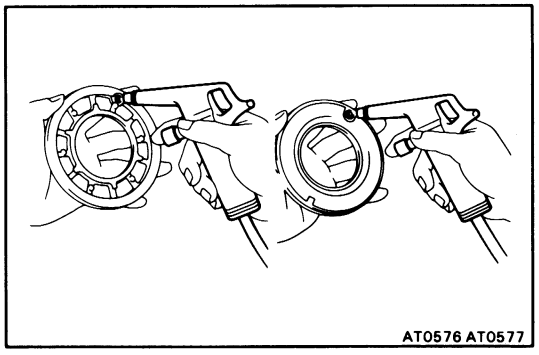

INSPECTION OF UNDERDRIVE UNIT

1. INSPECT UNDERDRIVE CLUTCH PISTON

(a) Check that the check ball is free by shaking the piston.

(b) Check that the valve does not leak by applying low-pressure compressed air.

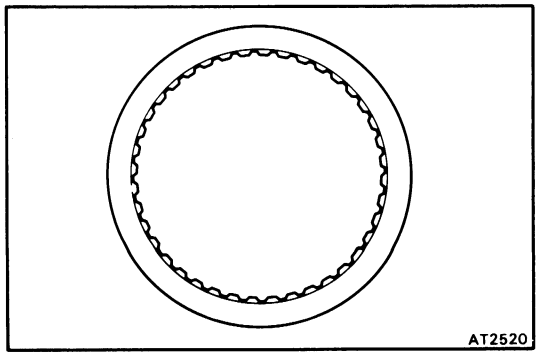

2. INSPECT DISC, PLATE AND FLANGE

Check that the sliding surface of discs are not worn or burnt.
If the disc is worn or burnt, replace all discs.
Then check that the sliding surfaces of plate and flange are not worn or burnt.
If necessary, replace them.

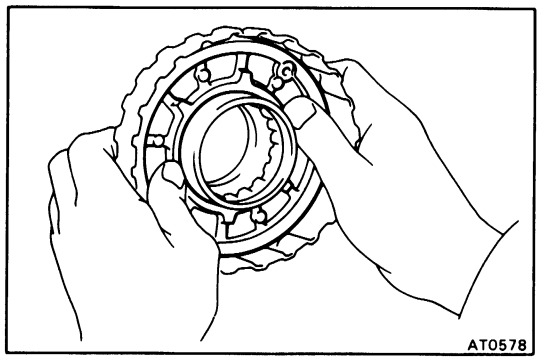

ASSEMBLY OF COUNTER SHAFT

(See page AT-84)

1. INSTALL NEW O-RINGS ON PISTON

Coat the O-rings with ATF.

2. INSTALL UNDERDRIVE CLUTCH PISTON IN CLUTCH DRUM

Be careful not to damage the O-rings.

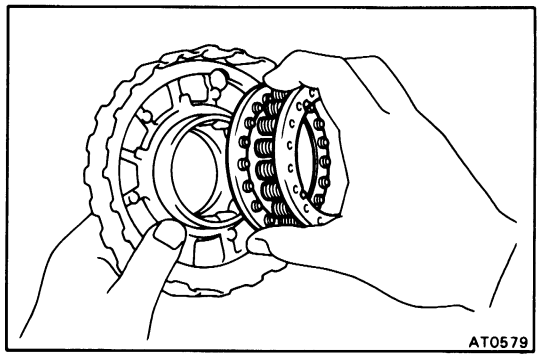

3. PLACE RETURN SPRING ON CLUTCH PISTON

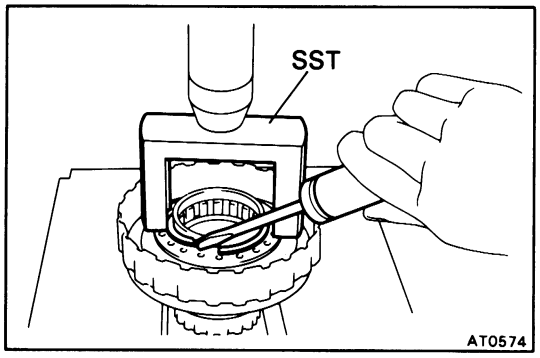

4. COMPRESS RETURN SPRING AND INSTALL SNAP RING IN GROOVE

(a) Place SST on the spring retainer, and compress the spring with a press.

SST 09350-32014 (09351-32070)

(b) Install the snap ring with a screwdriver.
Be sure the end gap of snap ring is not aligned with the spring retainer claw.

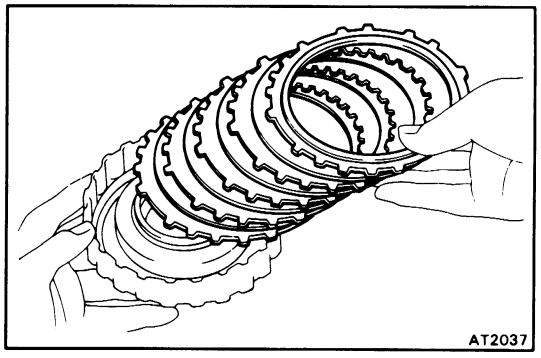

5. INSTALL PLATES, DISCS AND FLANGE

Install in order: Plate-disc-plate-disc-plate-disc-plate-disc-flange (flat end downward)

6. INSTALL SNAP RING

7. CHECK PISTON STROKE OF UNDERDRIVE CLUTCH

If replacing the discs, plates or flange, check the piston stroke.

(a) Install the underdrive clutch in the transaxle case.

(b) Using a dial indicator (long type pick or SST), measure the underdrive clutch piston stroke applying and releasing the compressed air (4 – 8 kg/cm^2, 57 – 114 psi or 392 – 785 kPa) as shown.

SST 09350-32014 (09351-32190)

Piston stroke:
1.47 – 1.89 mm (0.0579 – 0.0744 in.)

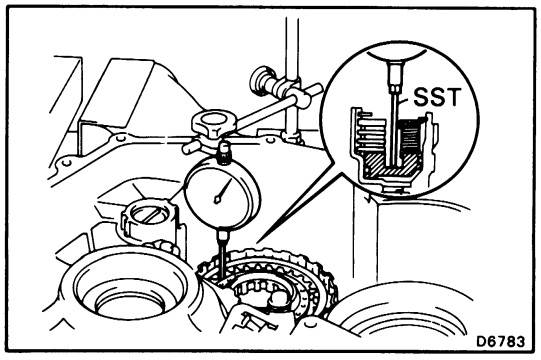

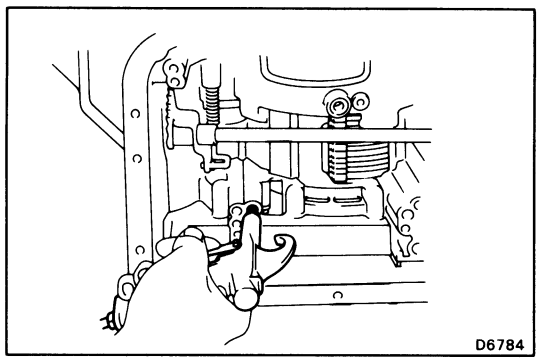

If the piston stroke is less than the limit, parts may be misassembled and reinstall them.
If the piston stroke nonstandard, select another flange.

NOTE: There are two different flange thickness.

Flange thickness: 2.04 mm (0.0803 in.)
2.40 mm (0.0945 in.)

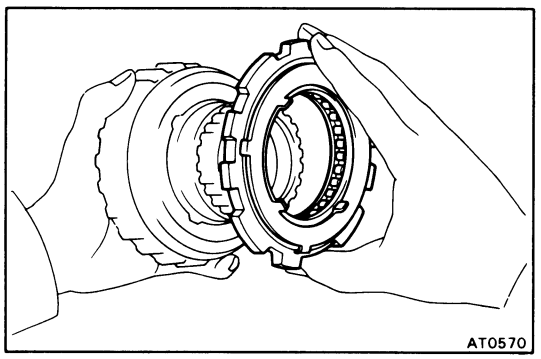

8. INSTALL THRUST WASHER TO CLUTCH DRUM

9. INSTALL UNDERDRIVE ONE-WAY CLUTCH

Install the one-way clutch with the claw of retainer up.

10. CHECK OPERATION OF ONE-WAY CLUTCH

Hold the clutch drum and turn the one-way clutch.
The one-way clutch should turn freely counterclockwise and lock clockwise.

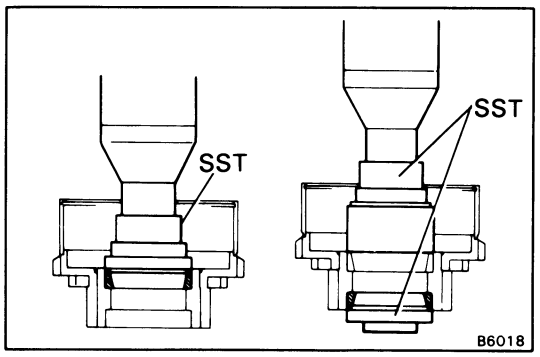

11. INSTALL BEARING OUTER RACES

(a) Using SST and a press, press in the thick race to the flange side of the drive pinion with output flange.

SST 09350-32014 (09351-32090, 09351-32180)

(b) Using SST and a press, press the thin race into the other side.

SST 09350-32014
(09351-32090, 09351-32150, 09351-32180)

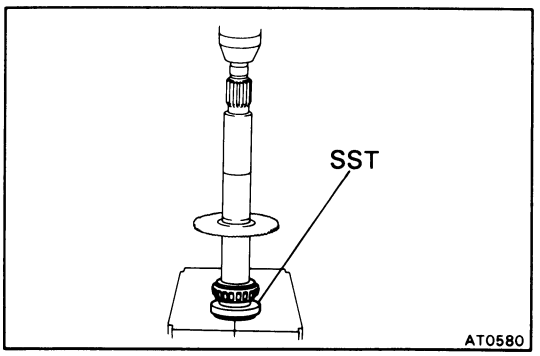

12. INSTALL BEARING TO COUNTER SHAFT

Using SST and a press, press in the bearing of the thick inner race side.

SST 09350-32014 (09351-32180)

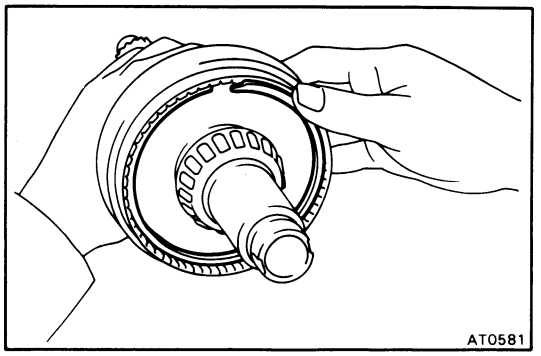

13. INSTALL RING GEAR AND SNAP RING

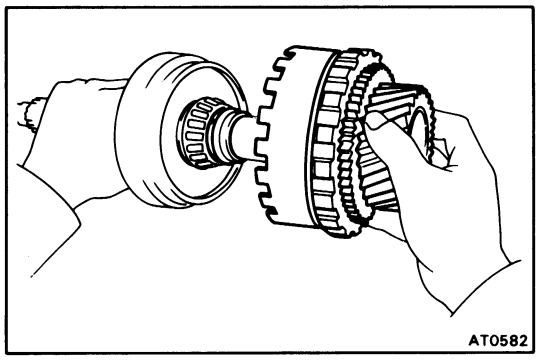

14. INSTALL NEW SPACER AND DRIVE PINION WITH OUTPUT FLANGE

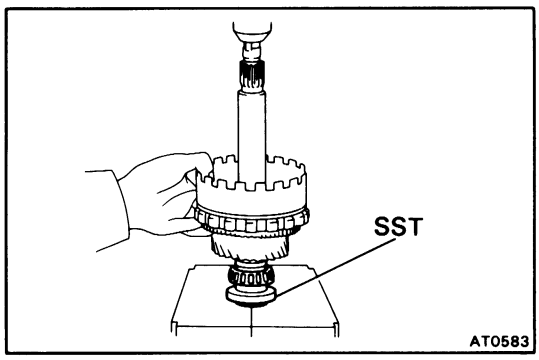

15. INSTALL ANOTHER BEARING TO COUNTER SHAFT

Using SST and a press, press in the other bearing.

SST 09350-32014 (09351-32180)

CAUTION: Be sure there is some clearance between the output flange and bearing.

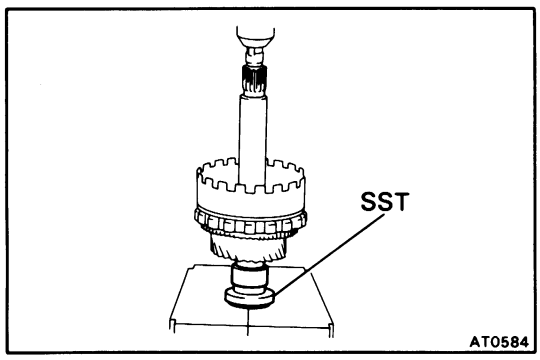

16. INSTALL BEARING INNER RACE

Using SST and a press, press in the inner race.

SST 09350-32014 (09351-32180)

CAUTION: Be sure there is some clearance.

17. INSTALL LOCK NUT

18. ADJUST PRELOAD OF COUNTER SHAFT (See page AT-91)

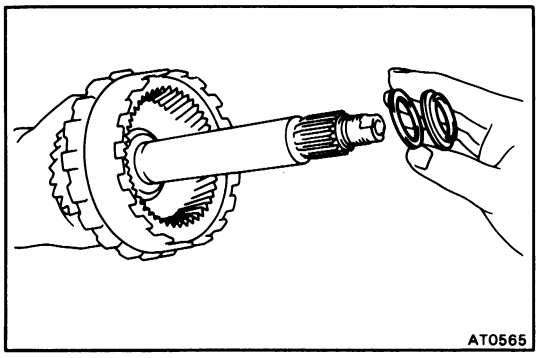

19. INSTALL RACE AND BEARING

Coat the race and bearing with petroleum jelly and install them.

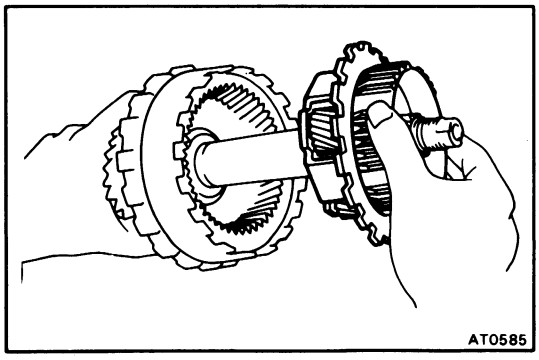

20. INSTALL UNDERDRIVE PLANETARY GEAR

21. INSTALL SNAP RING

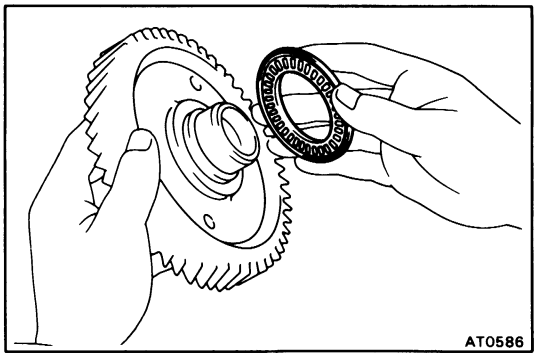

22. INSTALL THRUST BEARING TO COUNTER DRIVEN GEAR

Coat the thrust bearing with petroleum jelly and install it onto the counter driven gear.

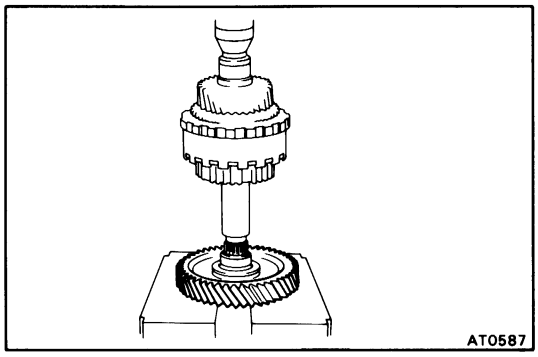

ADJUSTMENT OF COUNTER SHAFT PRELOAD

1. TEMPORARILY INSTALL COUNTER DRIVEN GEAR

Using a press, press in the driven gear to the counter shaft.

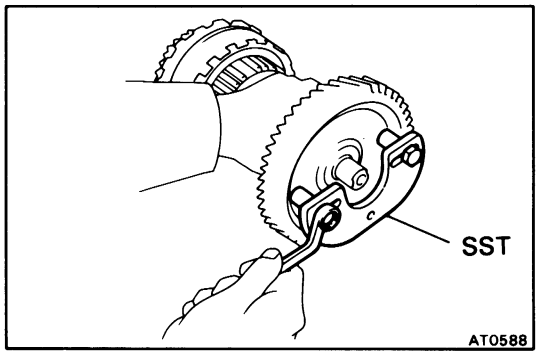

2. INSTALL SST TO COUNTER DRIVEN GEAR

(a) Install SST to the driven gear.

(b) Secure the counter shaft in a vise.

SST 09350-32014 (09351-32032)

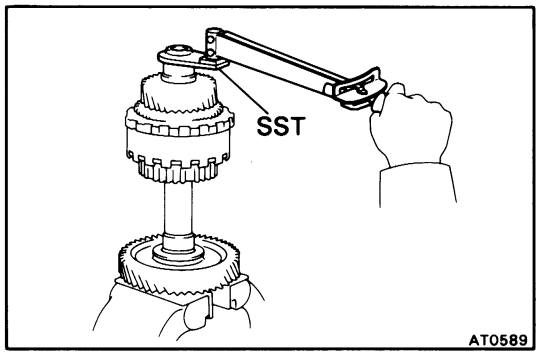

3. TIGHTEN NEW LOCK NUT WITH SST

SST 09350-32014 (09351-32170)

Torque (Reference):
1,800 — 2,200 kg-cm
(130 — 159 ft-lb, 177 — 216 N·m)

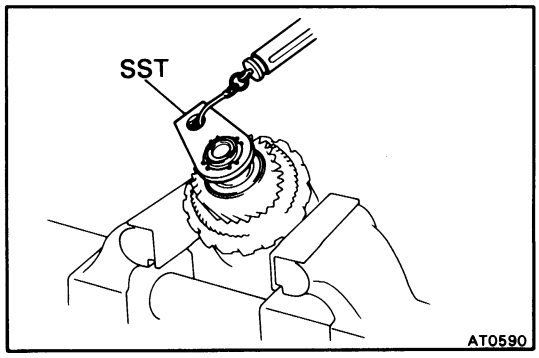

4. MEASURE STARTING TORQUE OF COUNTER SHAFT

(a) Snug down the bearing by turning the counter shaft.

(b) Using SST and a spring tension gauge, measure the starting torque of the counter shaft.

SST 09350-32014 (09351-32170)

Torque:
1.2 — 2.0 kg (2.6 — 4.4 lb, 12 — 20 N)
with tension gauge
6 — 10 kg-cm (5.2 — 8.7 in.-lb, 0.6 — 1.0 N·m)
with torque gauge (hexagon nut side)

NOTE: If the torque is exceeded, replace the spacer and retorque.

Valve Body

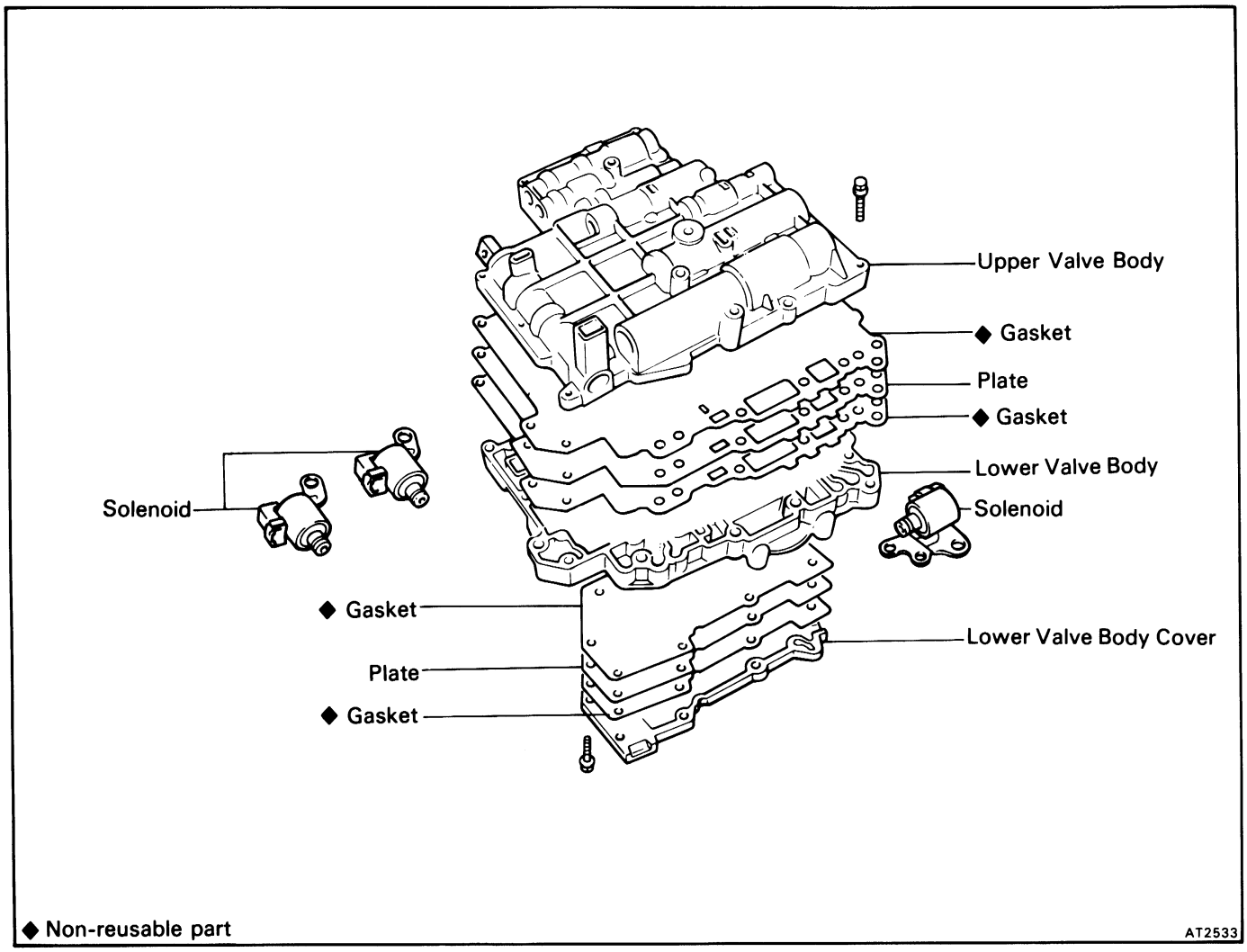

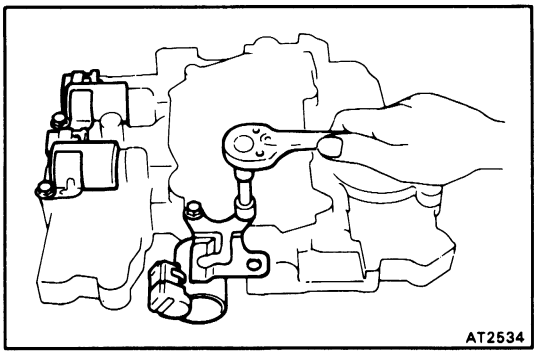

(Disassembly of Valve Body)

1. REMOVE SOLENOID VALVES

Remove the bolts and three solenoid valves.

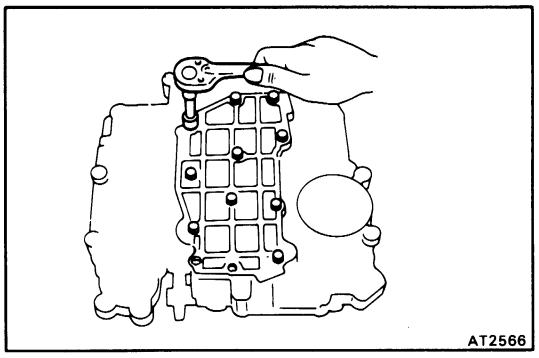

2. REMOVE LOWER VALVE BODY COVER

(a) Remove the ten bolts.

(b) Remove the cover, gaskets and plate.

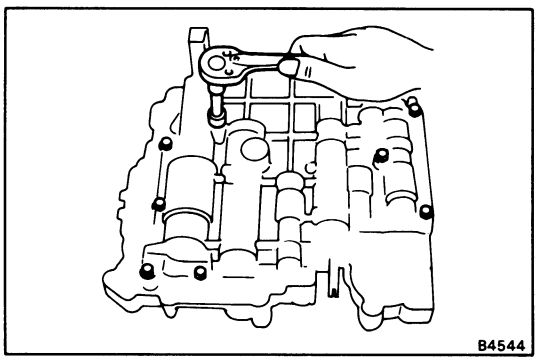

3. TURN ASSEMBLY OVER AND REMOVE THE EIGHT BOLTS FROM UPPER VALVE BODY

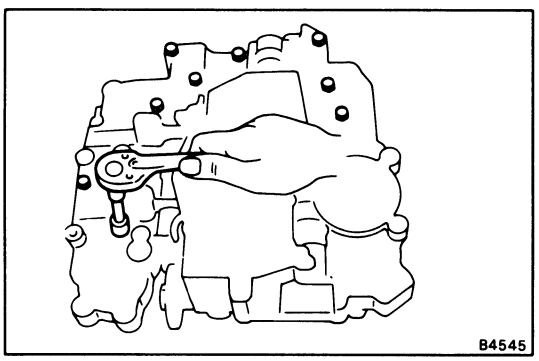

4. TURN ASSEMBLY OVER AND REMOVE THE NINE BOLTS FROM LOWER VALVE BODY, AND REMOVE LOWER VALVE BODY

Hold valve body plate to lower valve body.

NOTE: Be careful of the strainer, by-pass valve and pressure relief valve.

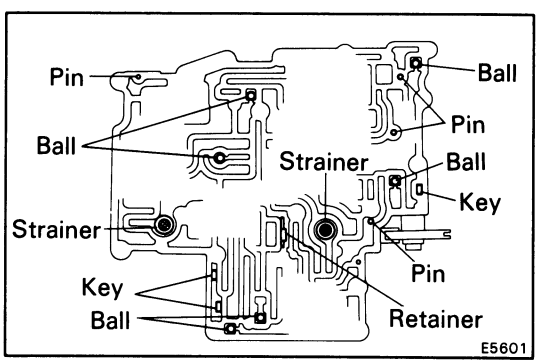

5. WATCH FOR CHECK BALLS, RETAINER, KEYS AND PINS IN VALVE BODY

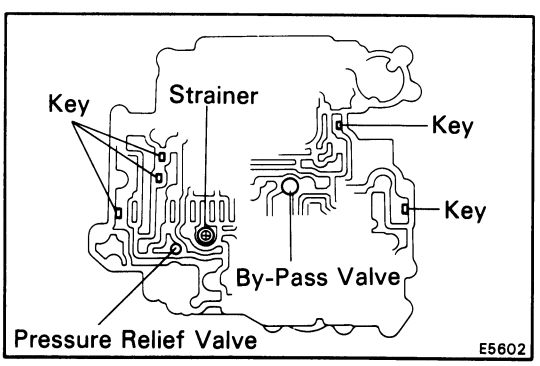

(Upper Valve Body)

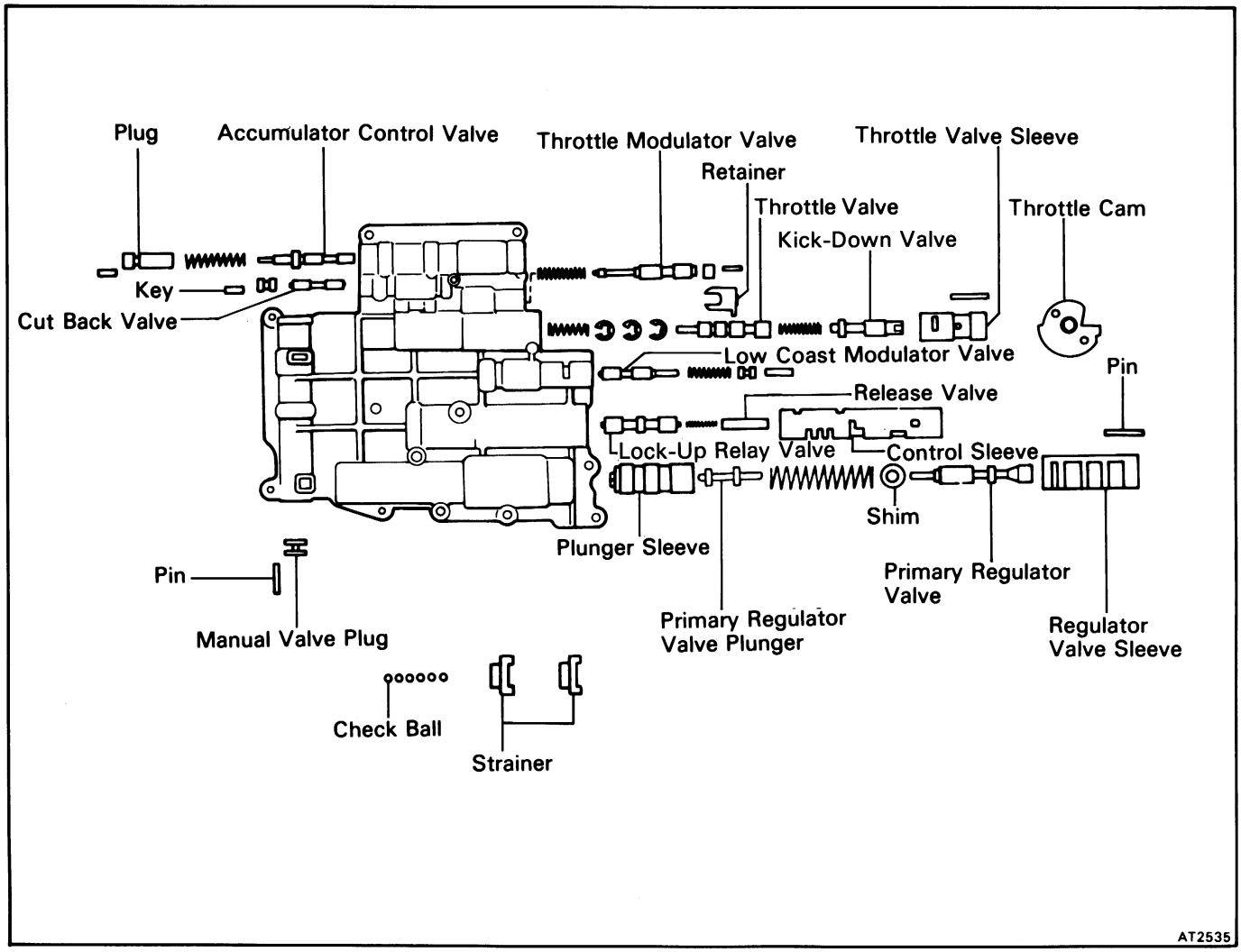

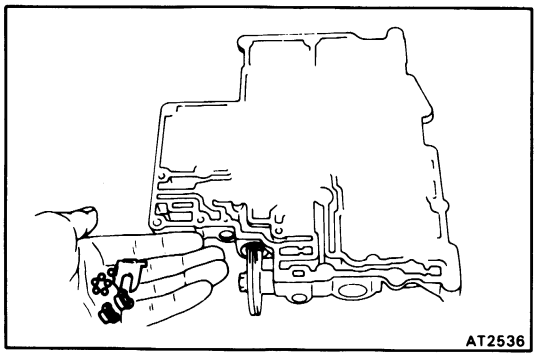

DISASSEMBLY OF UPPER VALVE BODY

1. REMOVE THROTTLE VALVE RETAINER, SIX CHECK BALLS AND TWO STRAINERS

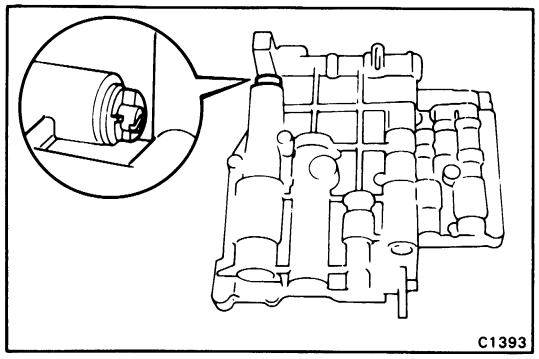

2. REMOVE PRIMARY REGULATOR VALVE

(a) Note which step from the end the plunger sleeve contacts the valve body.

NOTE: It is important to remember which step is in contact because the line pressure changes accordingly.

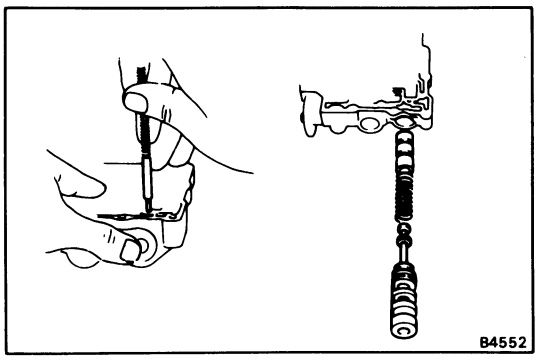

(b) Push in the valve sleeve and remove the pin with a magnetic finger.

(c) Remove the valve sleeve, primary regulator valve, valve plunger, plunger sleeve, shim and spring.

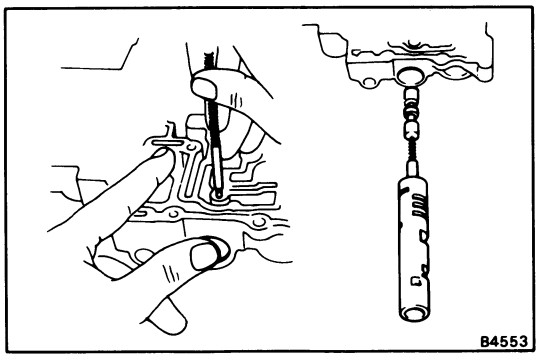

3. REMOVE LOCK-UP RELAY VALVE

(a) Remove the pin with a magnetic finger.

(b) Remove the valve sleeve, lock-up relay valve, spring and release valve.

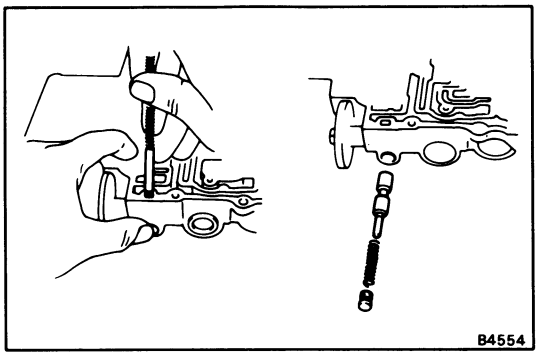

4. REMOVE LOW-COAST MODULATOR VALVE

(a) Push the plug, remove the key and plug with a magnetic finger.

(b) Remove the spring and low-coast modulator valve.

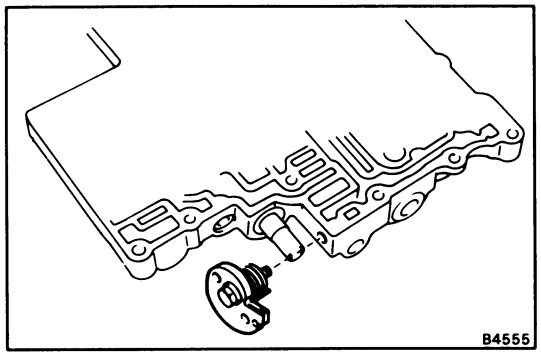

5. REMOVE THROTTLE CAM

(a) Remove the bolt.

(b) Remove the throttle cam, collar and spring.

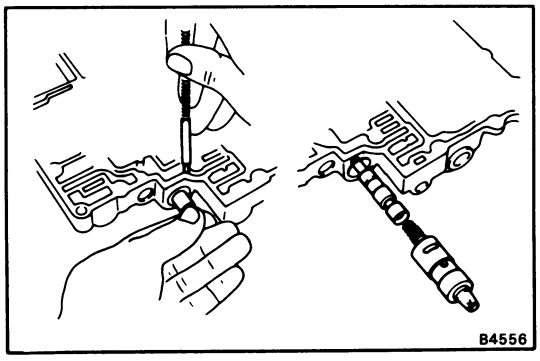

6. REMOVE THROTTLE VALVE

(a) Remove the pin with a magnetic finger.

(b) Remove the valve sleeve, kick-down valve, throttle valve and spring.

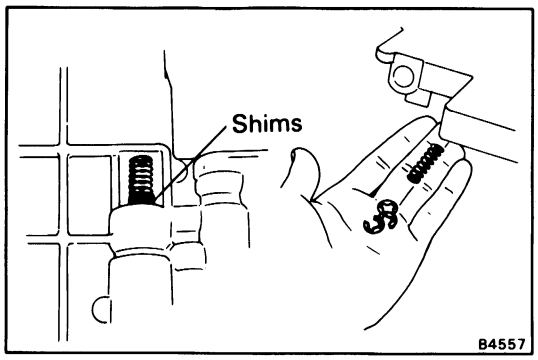

(c) Remove the spring and adjusting shims from the upper side of the upper valve body.

NOTE: Throttle pressure changes in accordance with the number of shims so make a note.

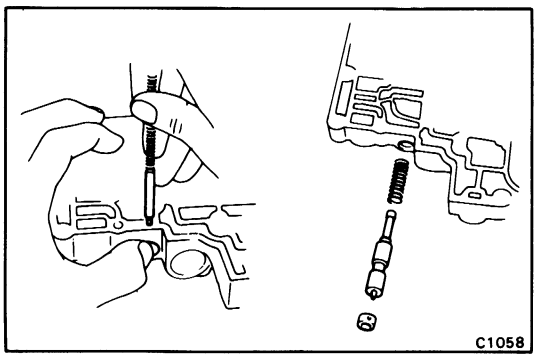

7. REMOVE THROTTLE MODULATOR VALVE

(a) Push in the plug and remove the pin and plug with a magnetic finger.

(b) Remove the modulator valve and spring.

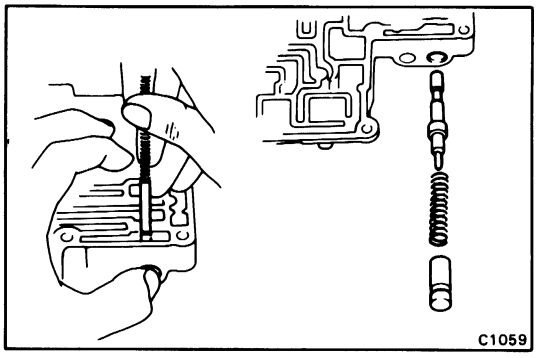

8. REMOVE ACCUMULATOR CONTROL VALVE

(a) Push in the plug and remove the key and plug with a magnetic finger.

(b) Remove the valve and spring.

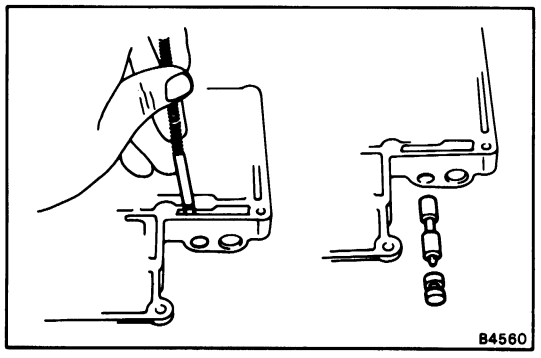

9. REMOVE CUT BACK VALVE

(a) Remove the key and plug with a magnetic finger.

(b) Remove the cut back valve.

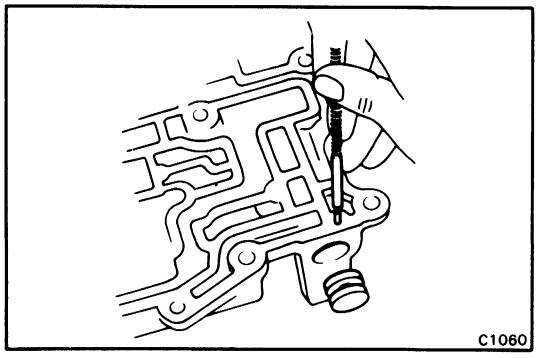

10. REMOVE MANUAL VALVE PLUG AND PIN WITH MAGNETIC FINGER

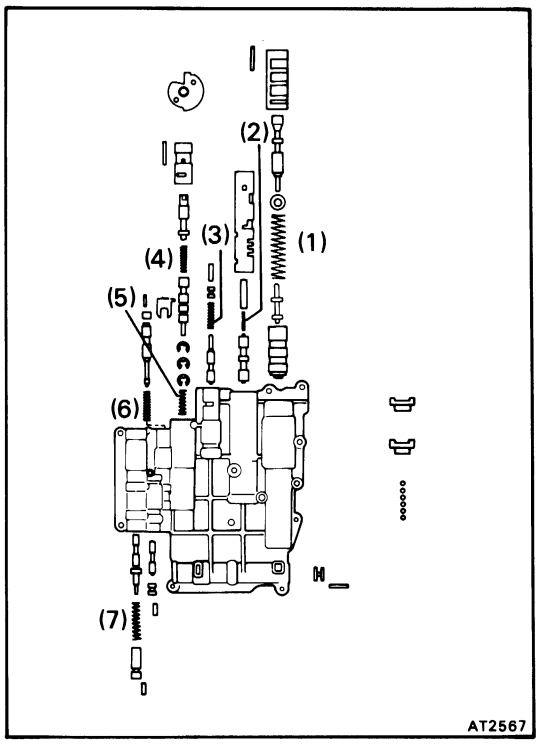

SPECIFICATIONS OF UPPER VALVE BODY SPRINGS

Spring	Free length mm (in.)	Color
(1) Primary regulator valve	66.65 (2.6240)	Purple
(2) Lock-up relay valve	18.80 (0.7402)	None
(3) Low-coast modulator valve	27.51 (1.0831)	Yellow
(4) Kick-down valve	29.76 (1.1717)	White
(5) Throttle valve	29.18 (1.1488)	Yellow Green
(6) Throttle mudulator valve	29.90 (1.1772)	Green
(7) Accumulator control valve	35.90 (1.4134)	Blue

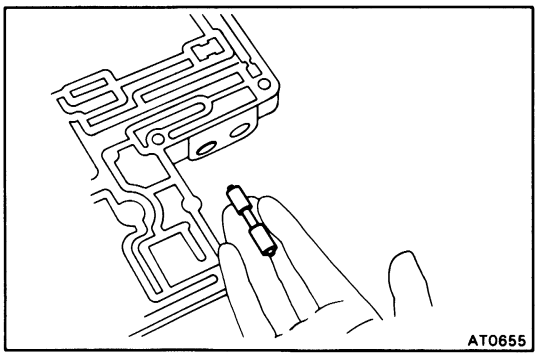

ASSEMBLY OF UPPER VALVE BODY

(See page AT-94)

1. INSTALL CUT BACK VALVE

(a) Install the cut back valve with the small end first.

(b) Install the plug and key.

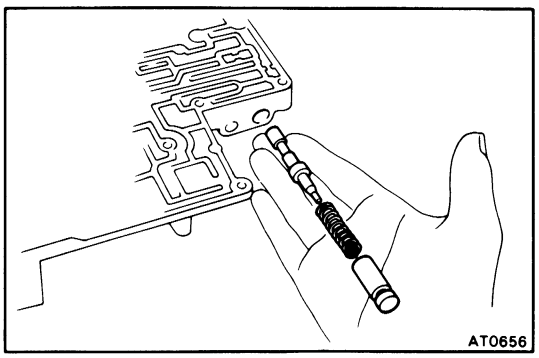

2. INSTALL ACCUMULATOR CONTROL VALVE

(a) Install the control valve and spring.

(b) Install the plug thick end first and key.

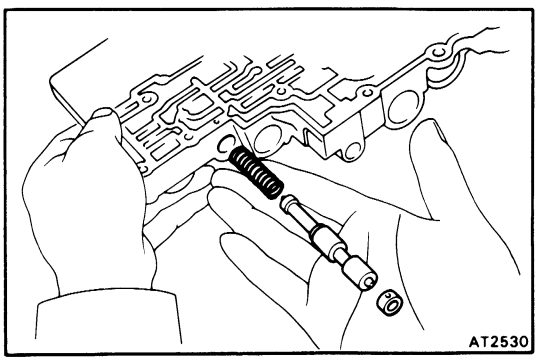

3. INSTALL THROTTLE MODULATOR VALVE

(a) Install the spring and modulator valve.

(b) Install the plug flat end first and pin.

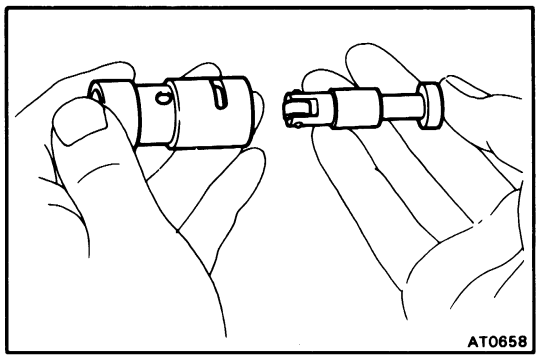

4. INSTALL KICK-DOWN VALVE

Install the kick-down valve to the throttle valve sleeve.

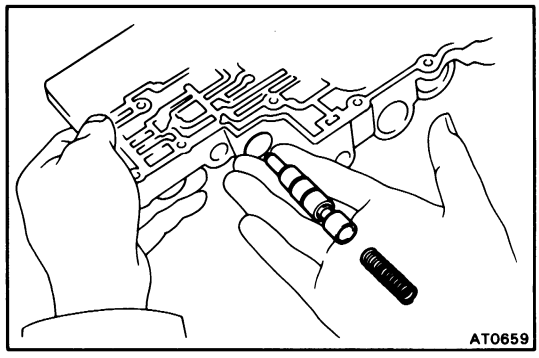

5. INSTALL THROTTLE VALVE

(a) Install the throttle valve with the small end first.

(b) Install the spring.

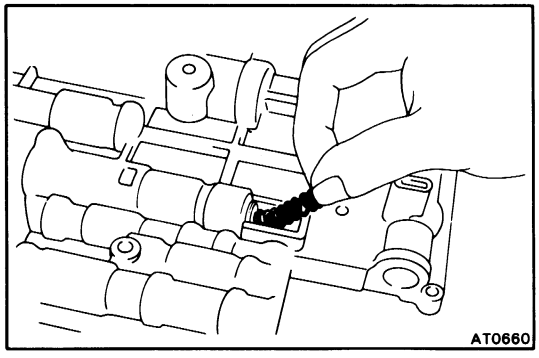

(c) Install the same number of adjusting shims as was removed during disassembly.

(d) Install the spring.

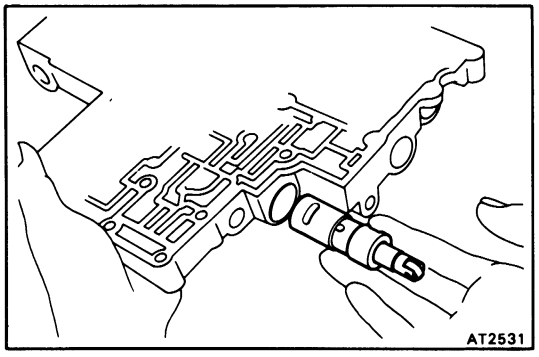

6. INSTALL KICK-DOWN VALVE WITH THROTTLE VALVE SLEEVE

(a) Install the kick-down valve with the sleeve.

(b) Install the pin to hold the sleeve inplace.

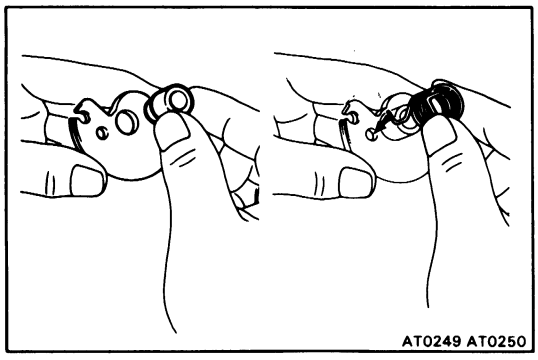

7. ASSEMBLE THROTTLE CAM

(a) Install the collar to the cam.

(b) Install the spring with the hook through the hole in the cam.

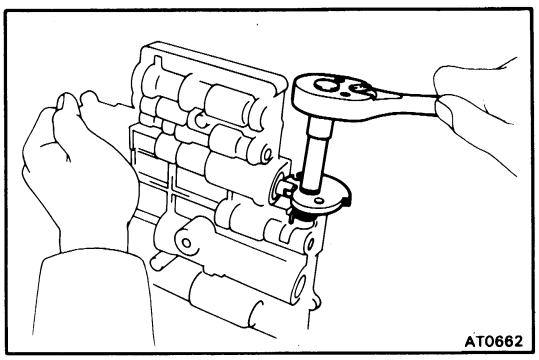

8. INSTALL THROTTLE CAM ASSEMBLY TO UPPER VALVE BODY

Check the position of the spring ends.
Tighten the bolt.

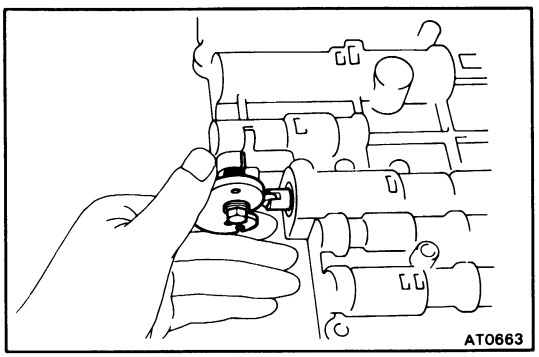

9. MAKE SURE THAT THROTTLE CAM MOVES ON ROLLER OF KICK-DOWN VALVE

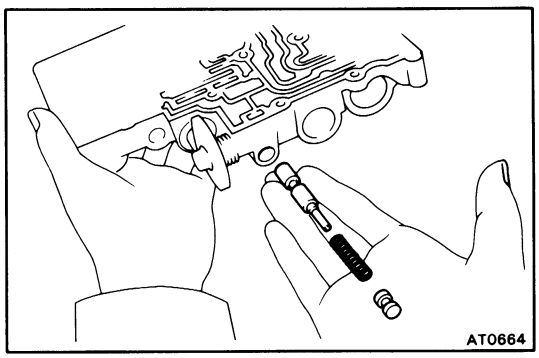

10. INSTALL LOW-COAST MODULATOR VALVE

(a) Install the modulator valve and spring.

(b) Install the plug and key.

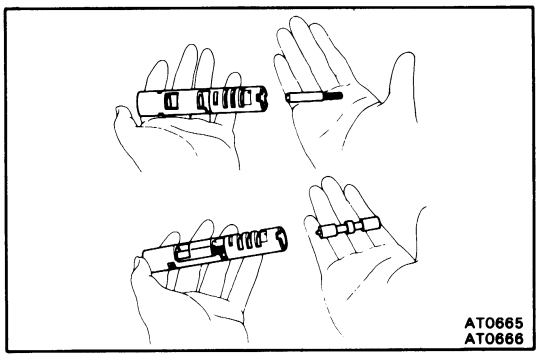

11. ASSEMBLE LOCK-UP RELAY VALVE

(a) Install the release valve flat end first to the valve sleeve, and install the spring.

(b) Install relay valve to the valve sleeve.

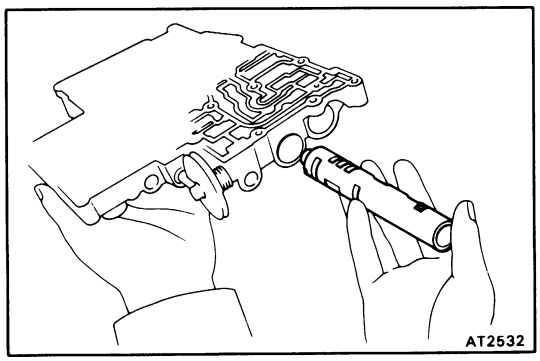

12. INSTALL LOCK-UP RELAY VALVE SLEEVE TO UPPER VALVE BODY

(a) Install the valve sleeve to the upper valve body.

(b) Install the pin to hold the valve sleeve.

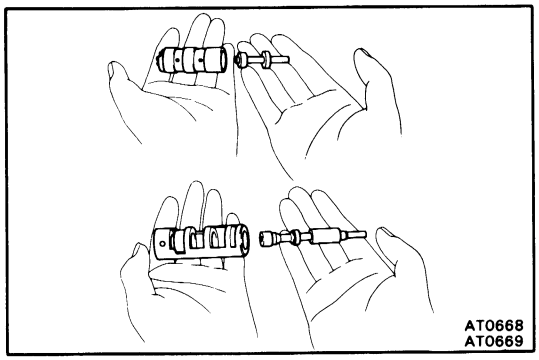

13. ASSEMBLE PRIMARY REGULATOR VALVE

(a) Install the valve plunger small end first to the plunger sleeve.

(b) Install the regulator valve to the valve sleeve.

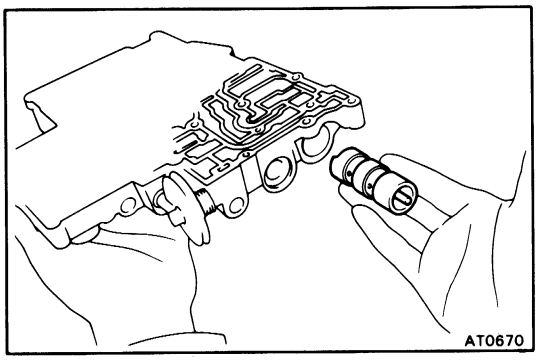

14. INSTALL PRIMARY REGULATOR VALVE

(a) Install the plunger sleeve assembly to the upper valve body.

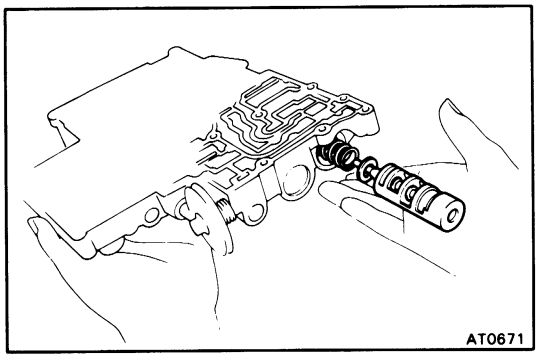

(b) Install the spring, shim and regulator valve assembly to the upper valve body.

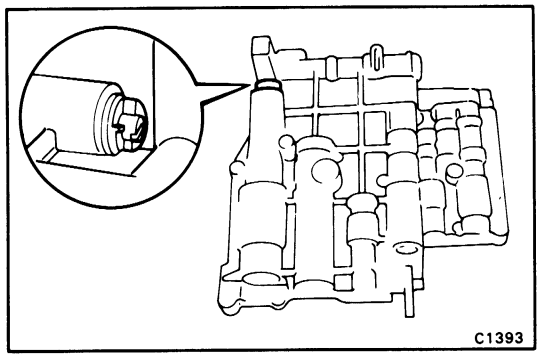

NOTE: Assemble so the end of the plunger sleeve is making contact with the valve body at the same step as when it was disassembled.

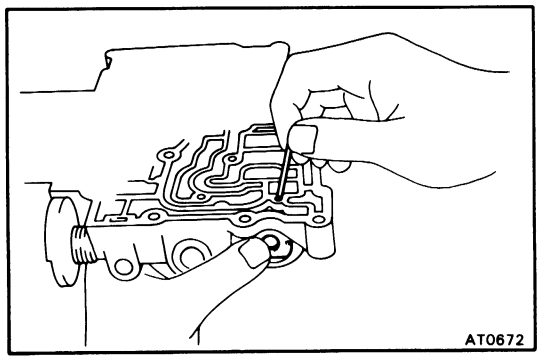

(c) Install the pin to hold the valve sleeve.

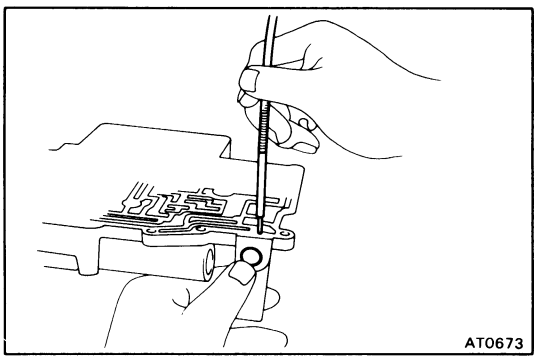

15. INSTALL MANUAL VALVE PLUG AND PIN

Coat the pin with petroleum jelly, install the pin and plug.

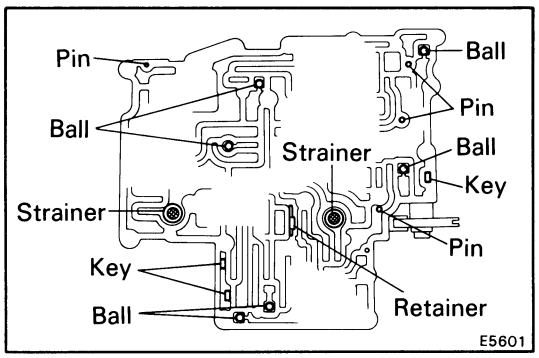

16. INSTALL THROTTLE VALVE RETAINER, SIX CHECK BALLS AND TWO STRAINERS

Coat the throttle valve retainer with petroleum jelly, install the throttle valve retainer, six check balls and two strainers.

(Lower Valve Body)

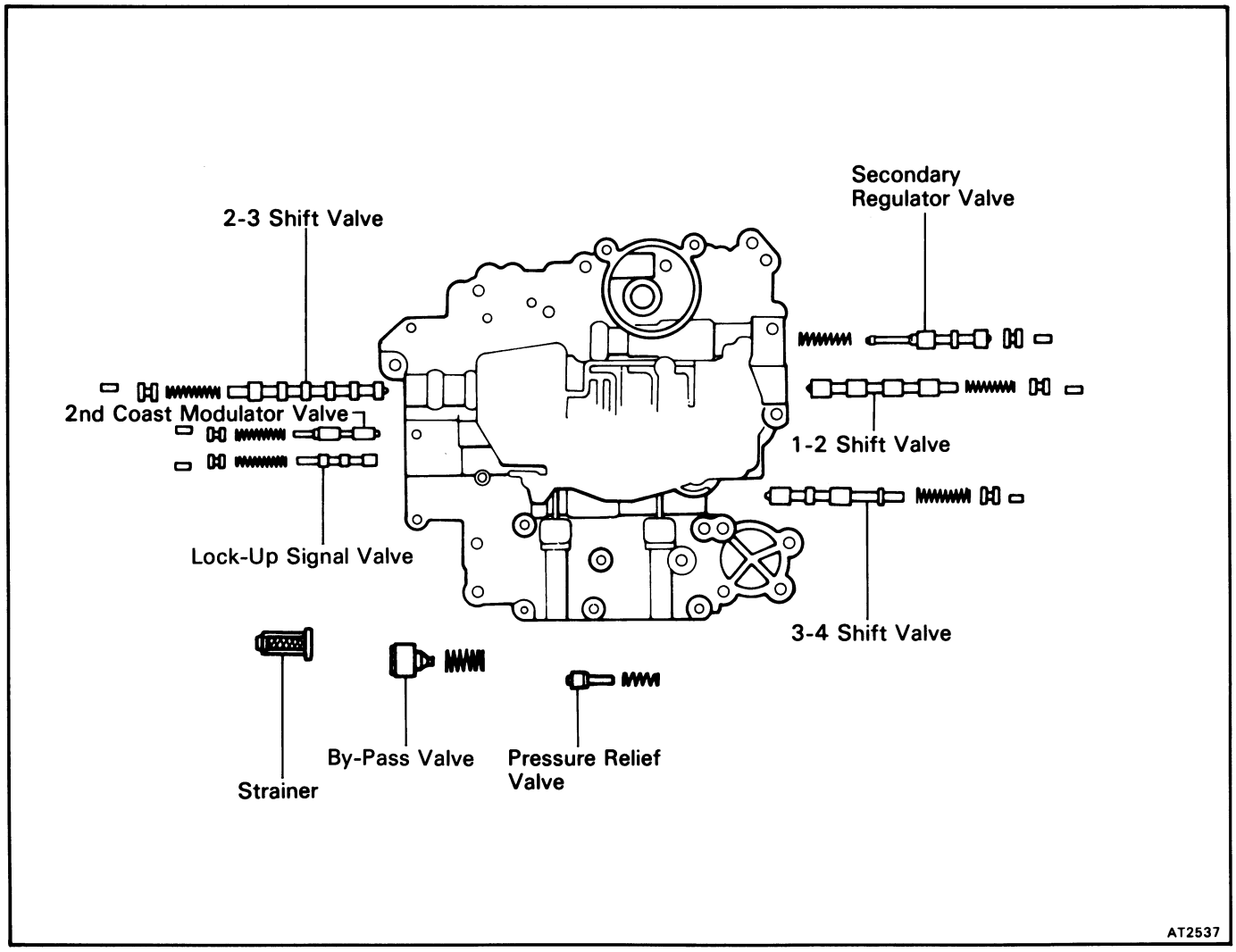

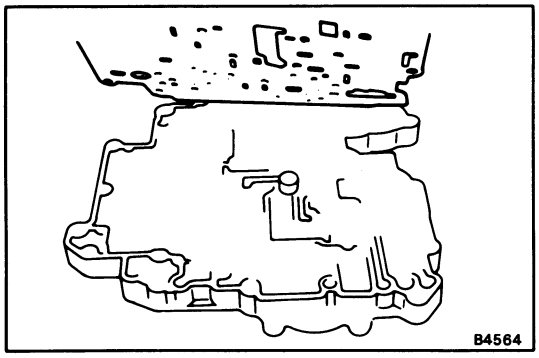

DISASSEMBLY OF LOWER VALVE BODY

1. **REMOVE LOWER VALVE BODY PLATE AND GASKETS**

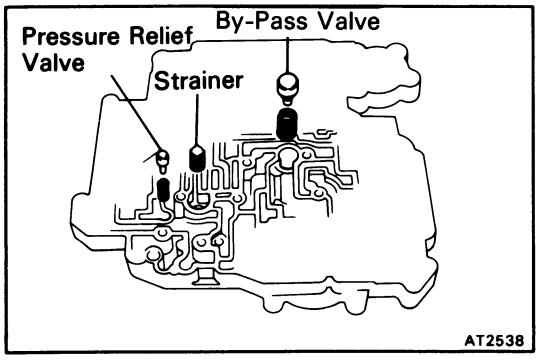

2. **REMOVE BY-PASS VALVE AND SPRING**
3. **REMOVE PRESSURE RELIEF VALVE AND SPRING**
4. **REMOVE STRAINER**

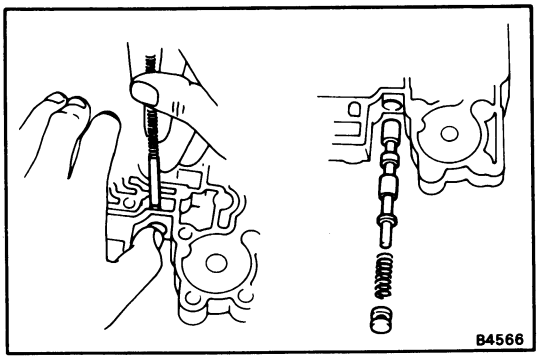

5. REMOVE 3-4 SHIFT VALVE

(a) Push in the plug and remove the key and plug with a magnetic finger.

(b) Remove the 3-4 shift valve and spring.

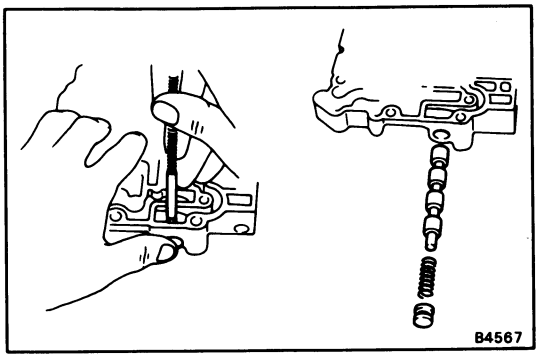

6. REMOVE 1-2 SHIFT VALVE

(a) Push in the plug and remove the key and plug with a magnetic finger.

(b) Remove the 1-2 shift valve and spring.

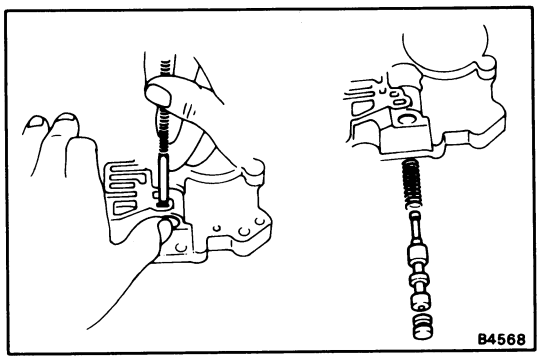

7. REMOVE SECONDARY REGULATOR VALVE

(a) Push in the plug and remove the key and plug with a magnetic finger.

(b) Remove the secondary regulator valve and spring.

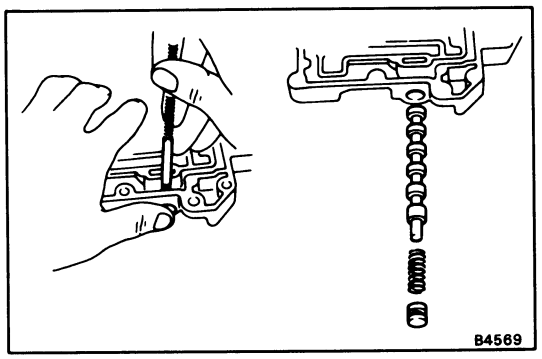

8. REMOVE 2-3 SHIFT VALVE

(a) Push in the plug and remove the key and plug with a magnetic finger.

(b) Remove the spring and 2-3 shift valve.

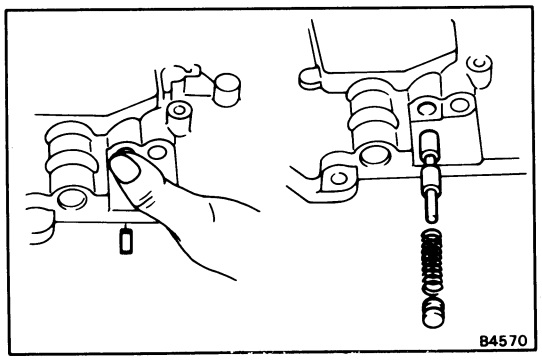

9. REMOVE SECOND COAST MODULATOR VALVE

(a) Push in the plug and remove the key and plug.

(b) Remove the spring and second coast modulator valve.

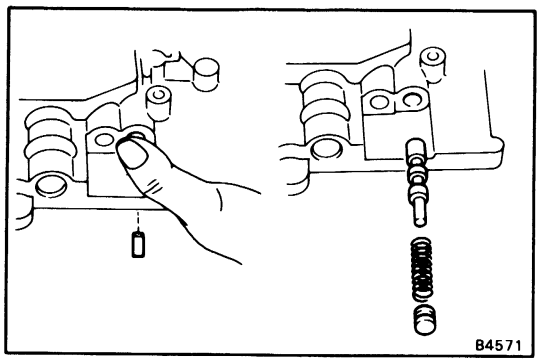

10. REMOVE LOCK-UP SIGNAL VALVE

(a) Push in the plug and remove the key and plug.

(b) Remove the spring and lock-up signal valve.

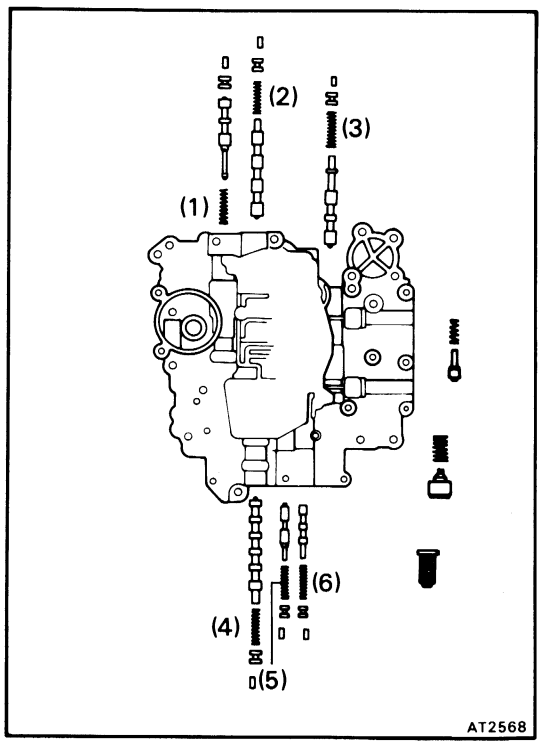

SPECIFICATIONS OF LOWER VALVE BODY SPRINGS

Spring	Free length mm (in.)	Color
(1) Secondary regulator valve	27.41 (1.0791)	Blue
(2) 1-2 Shift valve	30.77 (1.2114)	Purple
(3) 3-4 Shift valve	30.77 (1.2114)	Purple
(4) 2-3 Shift valve	30.77 (1.2114)	Purple
(5) 2nd Coast modulator valve	29.63 (1.1665)	Red
(6) Lock-up signal valve	30.00 (1.1811)	Orange

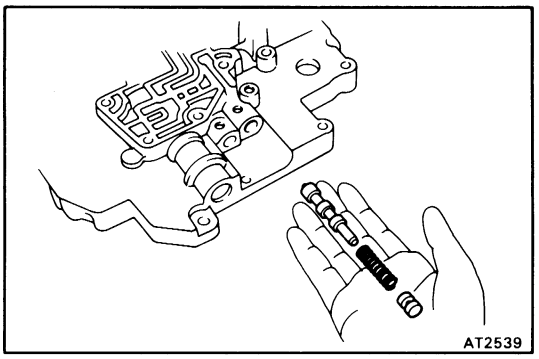

ASSEMBLY OF LOWER VALVE BODY

(See page AT-102)

1. INSTALL LOCK-UP SIGNAL VALVE

(a) Install the lock-up signal valve and spring.

(b) Install the plug and key.

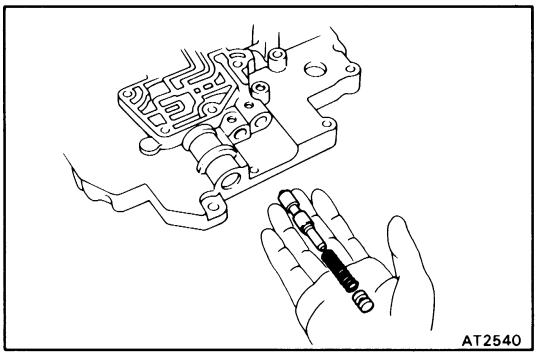

2. INSTALL SECOND COAST MODULATOR VALVE

(a) Install the second coast modulator valve and spring.

(b) Install the plug and key.

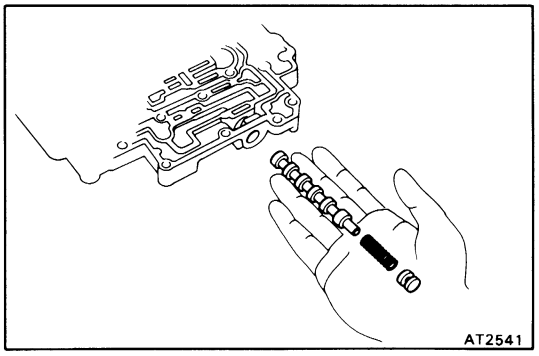

3. INSTALL 2-3 SHIFT VALVE

(a) Install the 2-3 shift valve and spring.

(b) Install the plug and key.

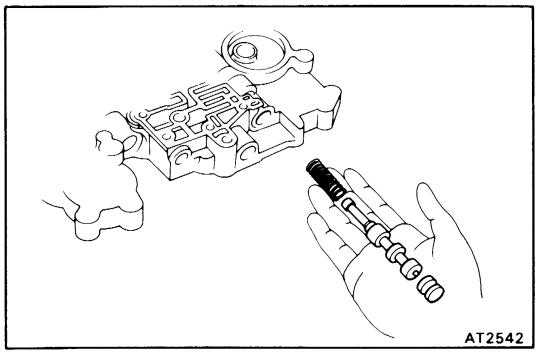

4. INSTALL SECONDARY REGULATOR VALVE

(a) Install the spring and secondary regulator valve.

(b) Install the plug and key.

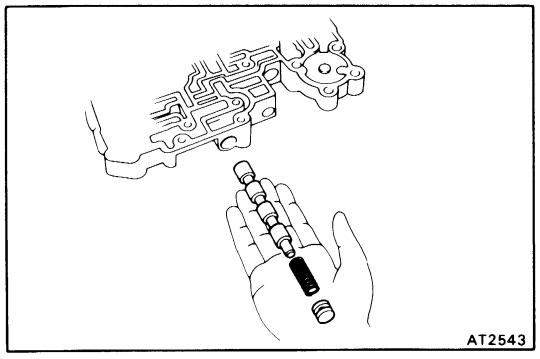

5. INSTALL 1-2 SHIFT VALVE

(a) Install the 1-2 shift valve and spring.

(b) Install the plug and key.

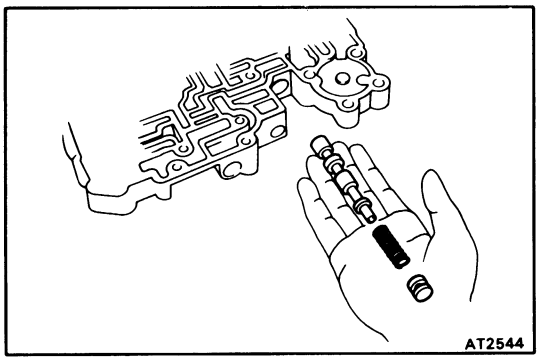

6. INSTALL 3-4 SHIFT VALVE

(a) Install the 3-4 shift valve and spring.

(b) Install the plug and key.

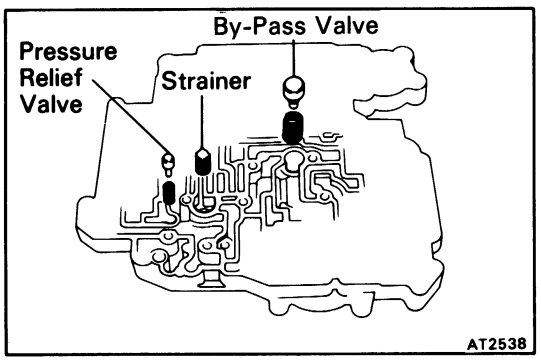

7. INSTALL BY-PASS VALVE AND SPRING

8. INSTALL PRESSURE RELIEF VALVE AND SPRING

9. INSTALL STRAINER

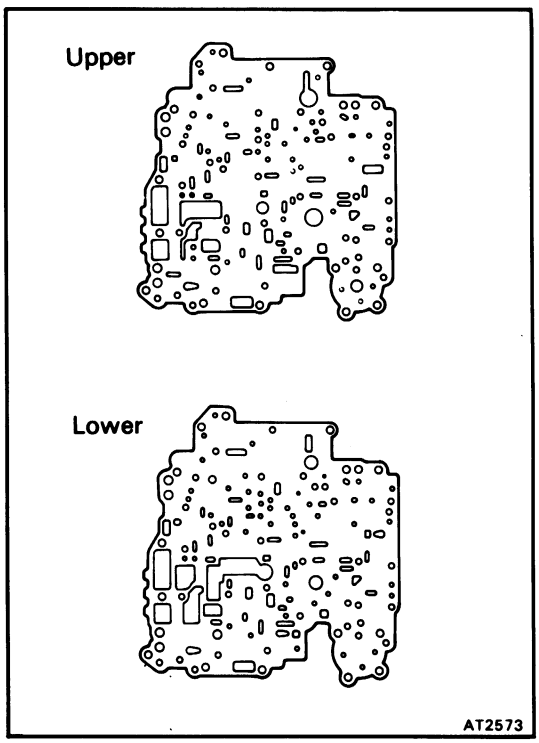

(Assembly of Valve Body)

(See page AT-92)

1. POSITION NEW GASKETS AND PLATE ON UPPER VALVE BODY

(a) Place a new gasket onto the upper valve body.

(b) Place the plate onto the upper valve body.

(c) Place another new gasket onto the plate.

(d) Align each bolt hole in the valve body with the two gaskets and plate.

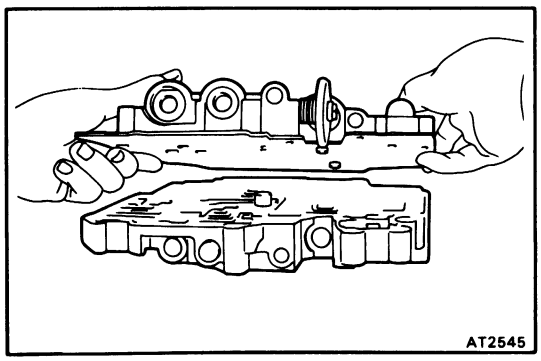

2. PLACE UPPER VALVE BODY AND GASKETS WITH PLATE ON TOP OF LOWER VALVE BODY

(a) Hold the upper valve body, gaskets and plate securely so they do not separate.

(b) Align each bolt hole in the valve bodies with the gaskets and plate.

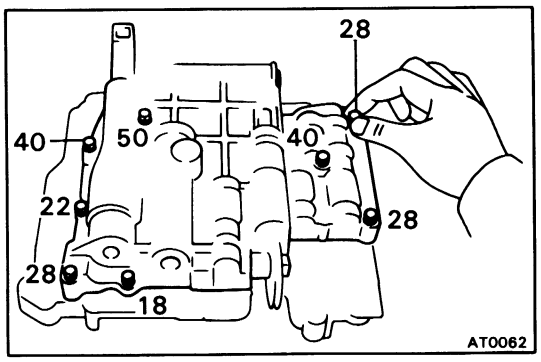

3. **INSTALL AND FINGER TIGHTEN THE EIGHT BOLTS IN UPPER VALVE BODY TO SECURE LOWER VALVE BODY**

NOTE: Each bolt length (mm) is indicated in the figure.

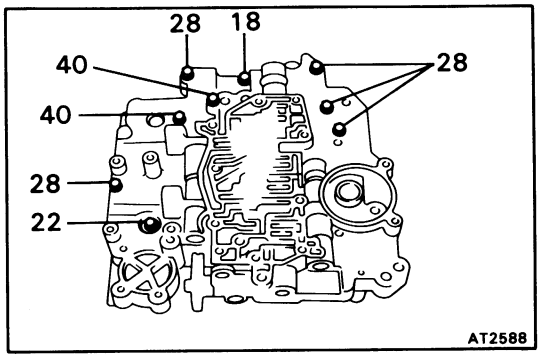

4. **TURN ASSEMBLY OVER AND FINGER TIGHTEN THE NINE BOLTS IN LOWER VALVE BODY**

NOTE: Each bolt length (mm) is indicated in the figure.

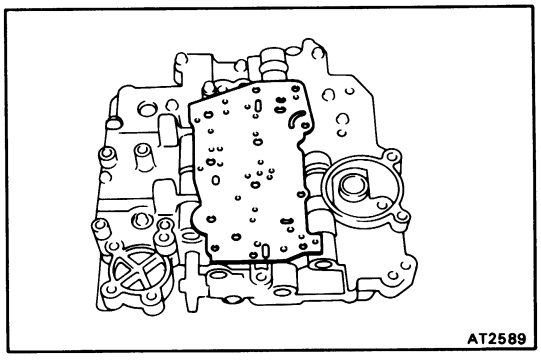

5. **INSTALL LOWER VALVE BODY COVER**

(a) Install a new gasket, plate and another new gasket.

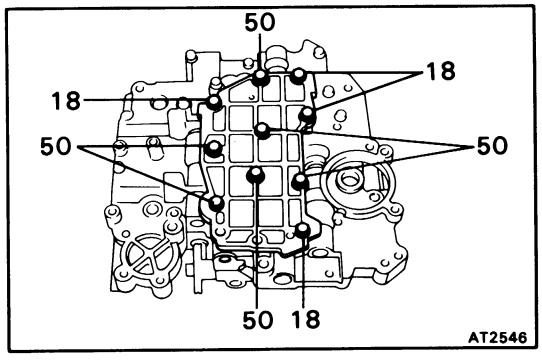

(b) Install the cover over the gasket and finger tighten the ten bolts on the valve body cover.

NOTE: Each bolt length (mm) is indicated in the figure.

6. **TIGHTEN THE TWENTY-SEVEN BOLTS IN VALVE BODY**

Torque: 65 kg-cm (56 in.-lb, 6.4 N·m)

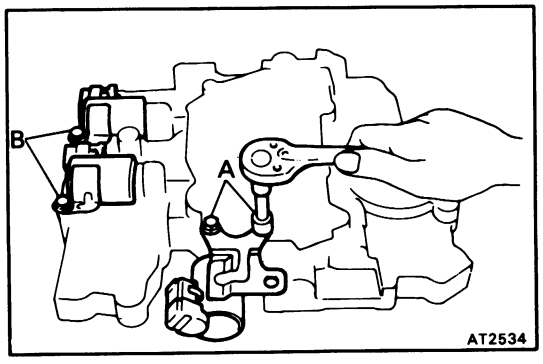

7. **INSTALL SOLENOIDS**

Torque: A 65 kg-cm (56 in.-lb, 6.4 N·m)
B 100 kg-cm (7 ft-lb, 10 N·m)

ASSEMBLY OF TRANSMISSION

(See pages AT-46 to 48)

Disassembly, inspection and assembly of each component group have been indicated in the preceding chapter.

GENERAL ASSEMBLY NOTES:

1. The automatic transmission is composed of highly precision-finished parts, necessitating careful inspection before assembly because even a small nick could cause fluid leakage or affect performance.
2. Before assembling new clutch discs, soak them in automatic transmission fluid for at least two hours.
3. Apply automatic transmission fluid on the sliding or rotating surfaces of parts before assembly.
4. Use petroleum jelly to keep small parts in their place.

Before assembly, make sure again that all component groups are assembled correctly. If something wrong is found in a certain component group during assembly, inspect and repair this group immediately. Recommended ATF: DEXRON® II.

5. Do not use adhesive cements on gaskets and similar parts.
6. When assembling the transmission, be sure to use new gaskets and O-rings.
7. Dry all parts by blowing with compressed air. Never use shop rags.
8. Be sure to install the thrust bearings and races in the correct direction and position.

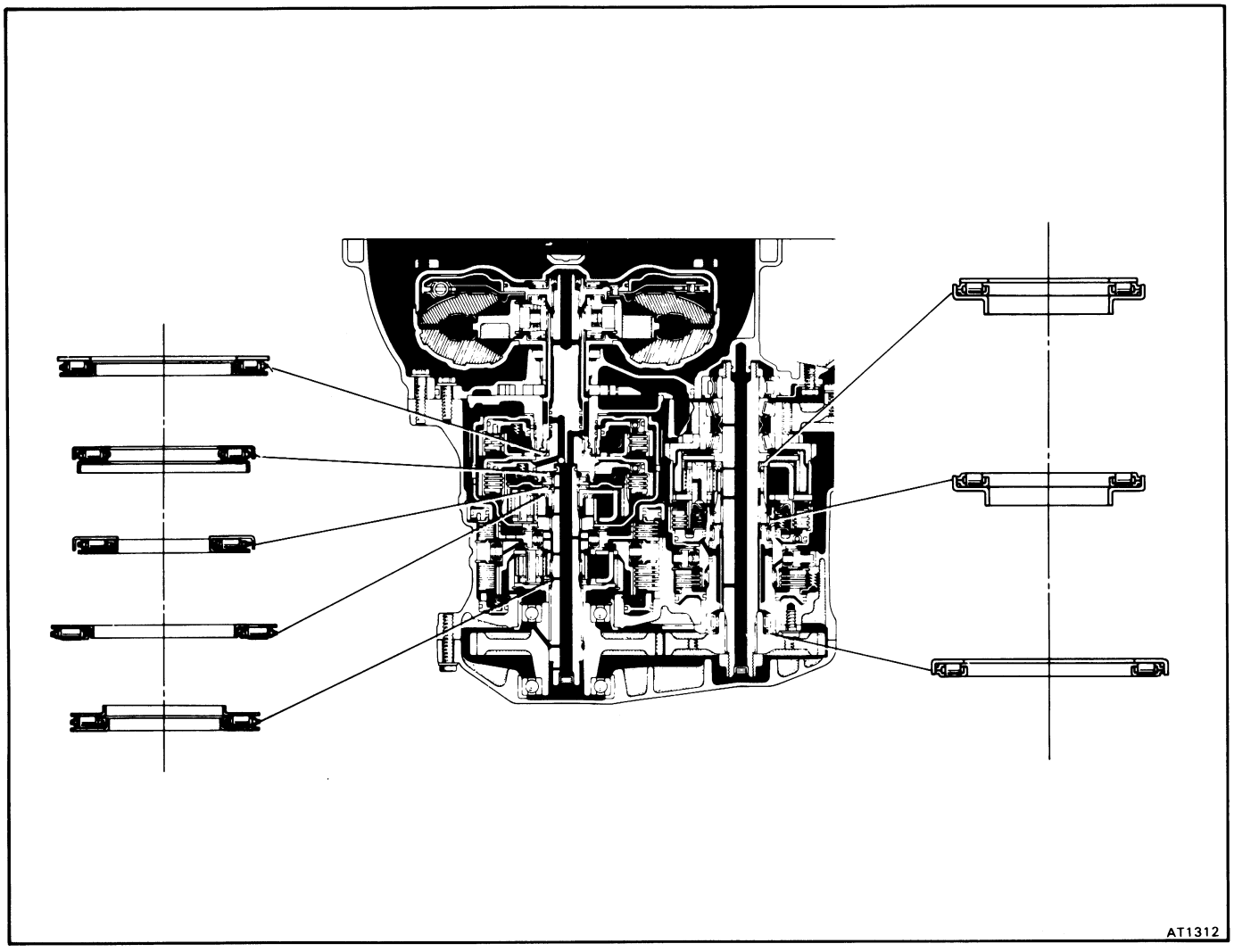

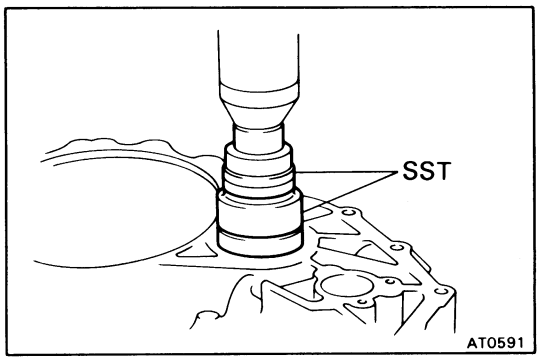

1. INSTALL BEARING TO TRANSAXLE HOUSING

(a) Using SST and a press, press the bearing into the transaxle housing.

SST 09350-32014 (09351-32090, 09351-32150)

(b) Install the bearing stopper.

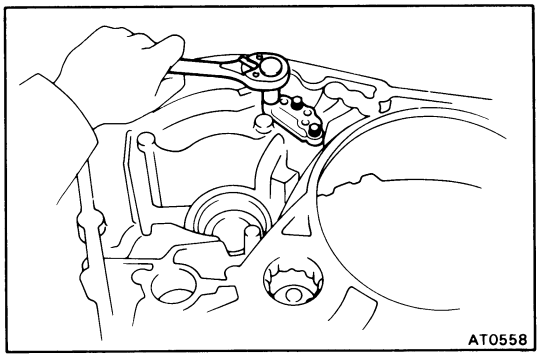

2. INSTALL OIL TUBE APPLY COVER

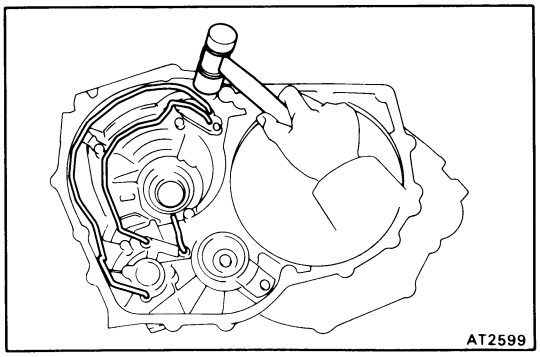

3. INSTALL OIL TUBES

Using a plastic hammer, install the three tubes.

CAUTION: Be careful not to bend or damage the tubes.

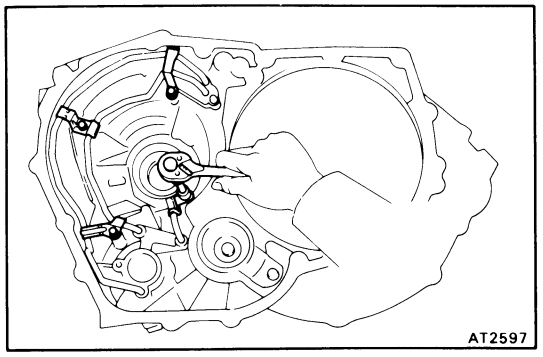

4. INSTALL OIL TUBE CLAMPS

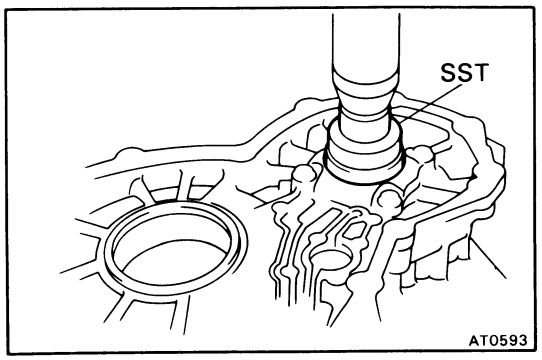

5. INSTALL BEARING TO TRANSMISSION CASE

Using SST and a press, press in the bearing.

SST 09350-32014 (09351-32090)

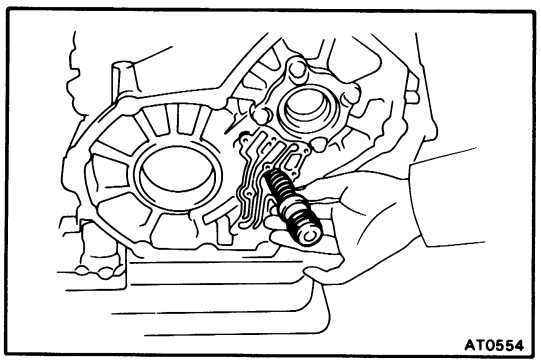

6. INSTALL B_4 ACCUMULATOR PISTON AND SPRING

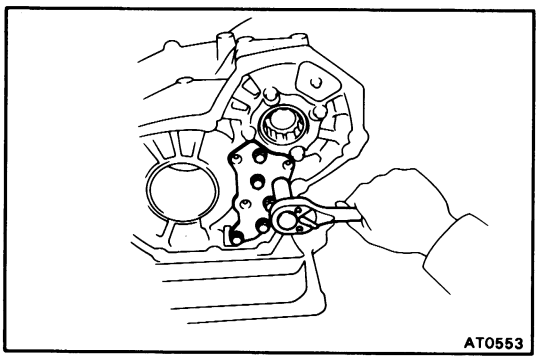

7. INSTALL OIL GALLERY COVER AND GASKET

(a) Install the oil gallery cover and gasket.

(b) Install and tighten the six bolts.

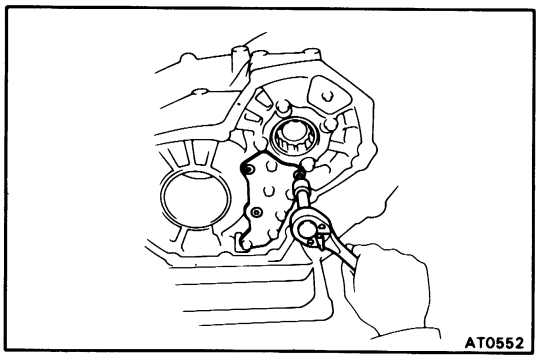

(c) Clean the threads of the screws and case with white gasoline.

(d) Apply seal packing or equivalent to the three screws.

Seal packing: Part No. 08833-00070, THREE BOND 1324 or equivalent

(e) Install and tighten the three screws.

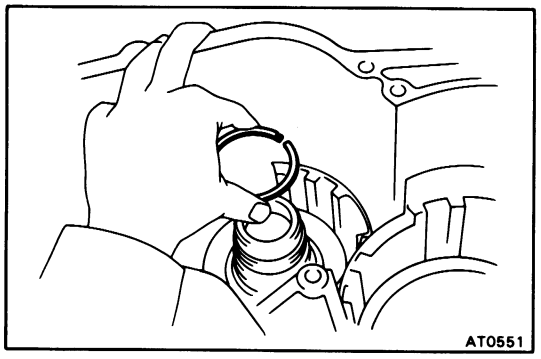

8. INSTALL OIL SEAL RINGS TO TRANSMISSION CASE

NOTE: After installing the oil seal rings, check that they move smoothly.

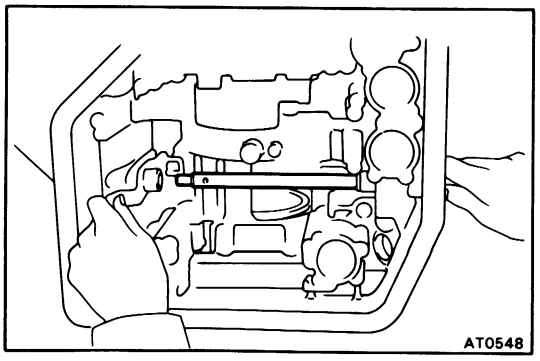

9. INSTALL MANUAL SHAFT AND LEVER

(a) Slide in the shaft and install the washer, spacer and manual lever.

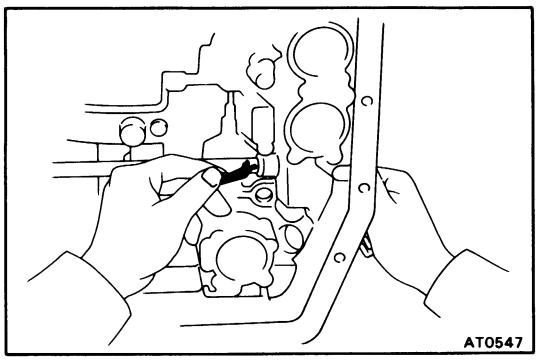

(b) Install the retaining spring.

NOTE: Make sure there is a washer between the retaining spring and case.

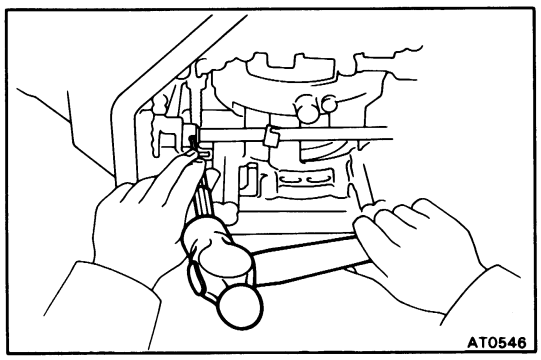

10. INSTALL PIN

Using a punch and a hammer, drive in the pin.

11. STAKE SPACER

Position and stake the spacer.

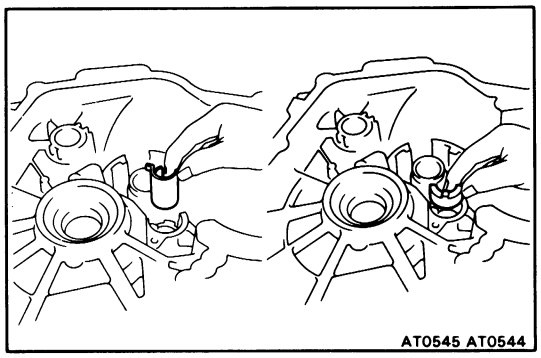

12. INSTALL CAM GUIDE BRACKET

Install the cam guide bracket and then insert the parking lock rod into the guide bracket.

13. INSTALL PARKING LOCK SLEEVE PROTRUDING PORTION UPWARD

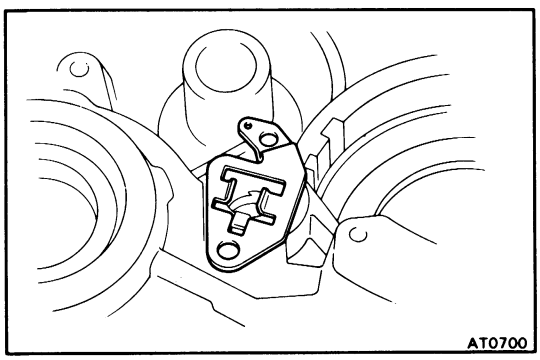

14. PLACE STOPPER PLATE

Place the stopper plate on the protruding portion of lock sleeve.

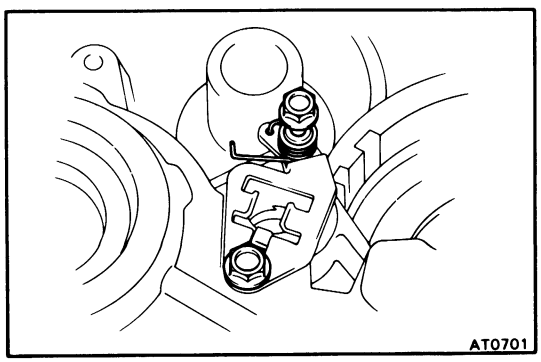

15. INSTALL GUIDE SLEEVE AND SPRING

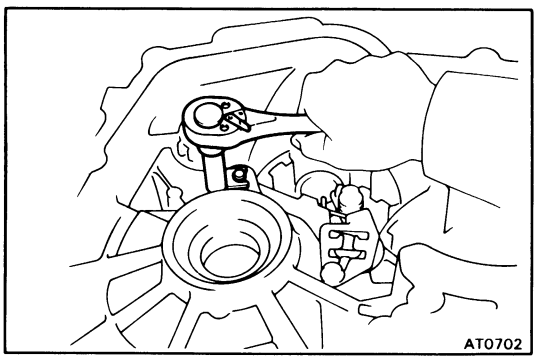

16. INSTALL PARKING LOCK PAWL, PAWL SHAFT AND SHAFT CLAMP

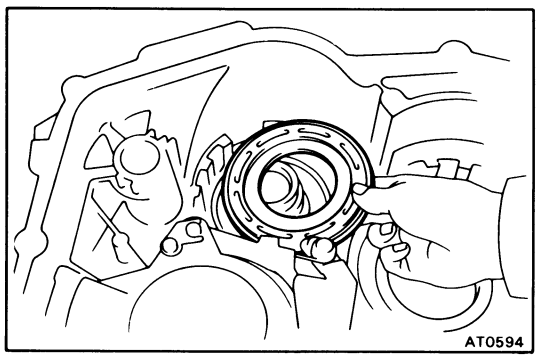

17. INSTALL UNDERDRIVE BRAKE PISTON

(a) Install new O-rings on the piston.
Coat the O-rings with ATF.

(b) Place the piston into the case with the cup side up, being careful not to damage the O-rings.

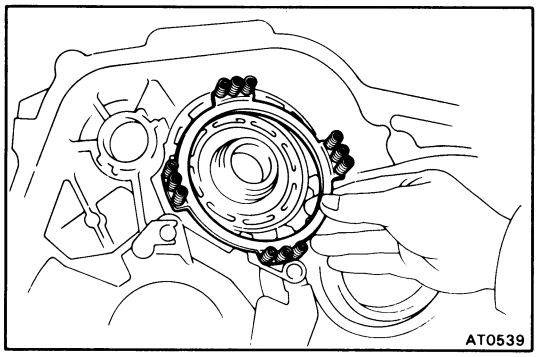

18. INSTALL BRAKE PISTON RETURN SPRING

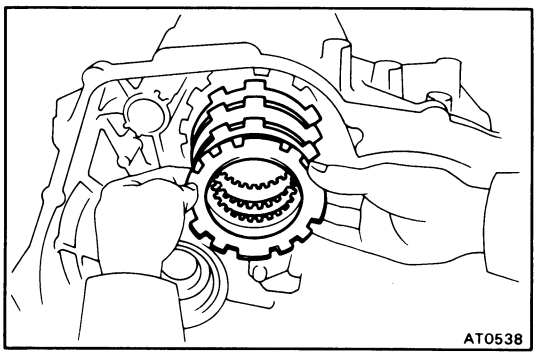

19. INSTALL PLATES, DISCS AND FLANGE

(a) Install in order: Plate-disc-plate-disc-plate-disc

(b) Install the flange with the flat end facing upward.

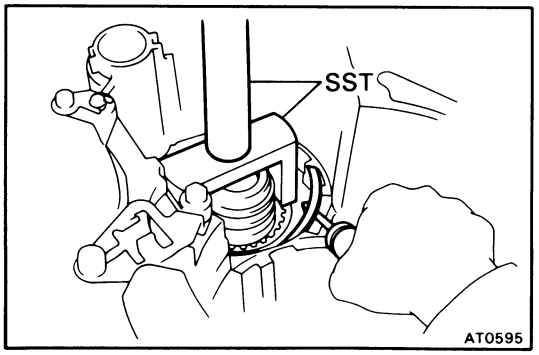

20. COMPRESS RETURN SPRING AND INSTALL SNAP RING IN GROOVE

(a) Place SST on the flange, and compress the return spring with a press.

SST 09350-32014 (09351-32070, 09351-32130)

(b) Install the snap ring.

NOTE: Be sure the end gap of the snap ring is not aligned with one of the cutouts.

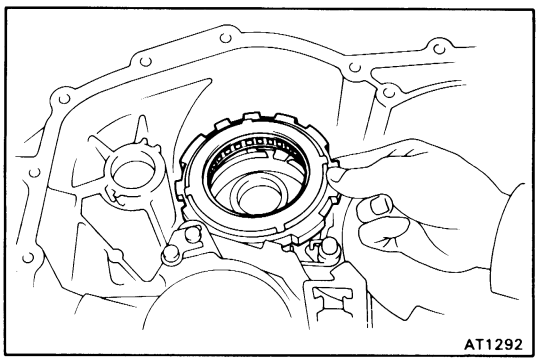

21. INSTALL UNDERDRIVE ONE-WAY CLUTCH

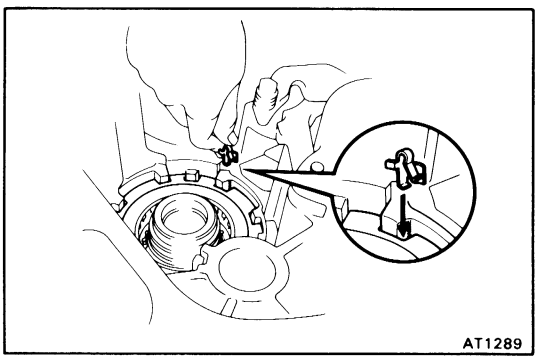

22. INSTALL ANTI-RATTLE CLIP

In the place shown in the figure (the space between the one-way clutch outer race and case), push the anti-rattle clip in until you hear the "click".

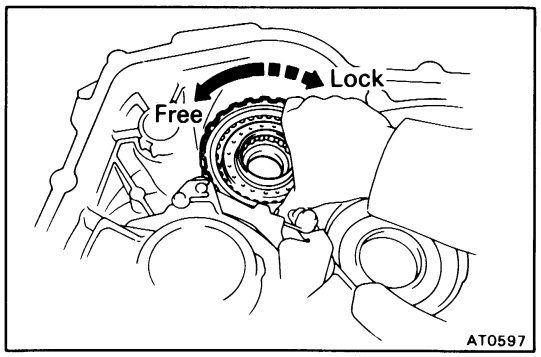

23. INSTALL UNDERDRIVE CLUTCH ASSEMBLY

(a) Align the flukes of discs in the underdrive brake.

(b) Install the clutch assembly.

(c) Turn the clutch assembly. The clutch assembly should turn freely counterclockwise and should lock clockwise.

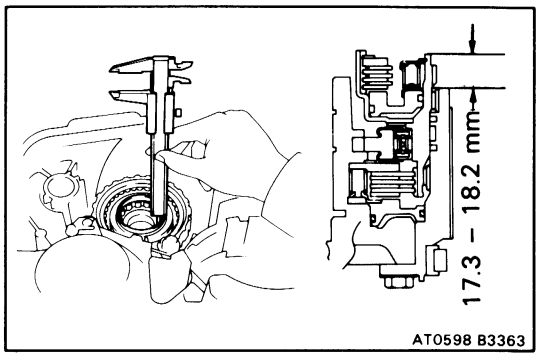

24. CHECK HEIGHT CLUTCH ASSEMBLY

Using vernier calipers, check the height from the sleeve to the inner race.

Height: 17.3 – 18.2 mm (0.681 – 0.717 in.)

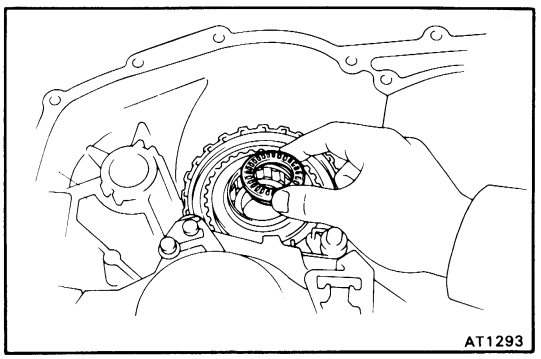

25. INSTALL RACE WITH BEARING

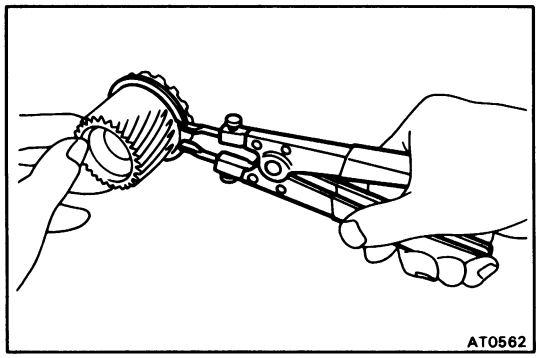

26. INSTALL SNAP RING TO SUN GEAR WITH SNAP RING PLIERS

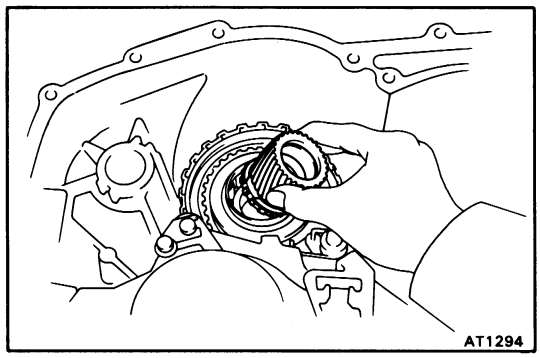

27. INSTALL SUN GEAR TO CASE

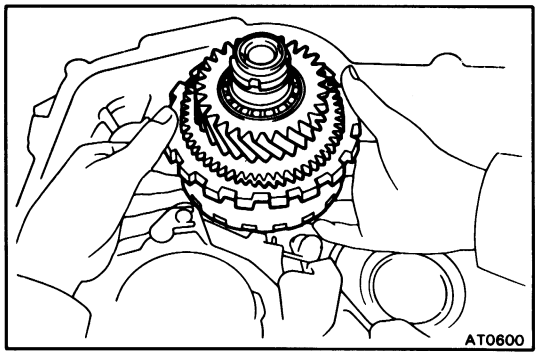

28. INSTALL COUNTER SHAFT ASSEMBLY

(a) Align the flukes of the discs in the underdrive clutch.

(b) Install the counter shaft assembly.

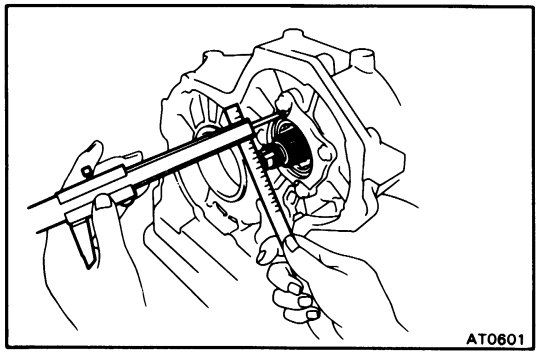

29. CHECK HEIGHT OF COUNTER SHAFT

Using vernier calipers, measure the distance between the tip of the counter shaft and bolt seat of the clutch support.

Height: 33.3 – 35.5 mm (1.311 – 1.398 in.)

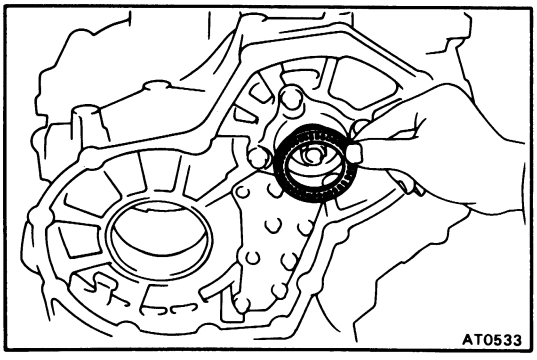

30. INSTALL THRUST NEEDLE BEARING

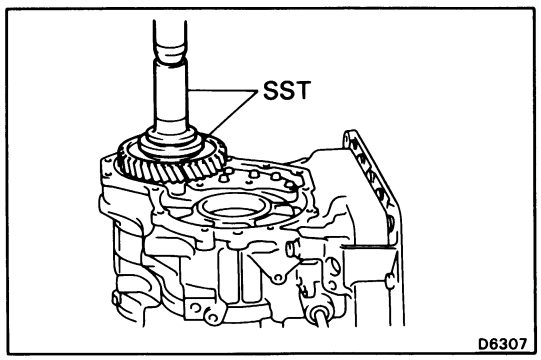

31. INSTALL COUNTER DRIVEN GEAR

Using SST and a press, press in the driven gear.

SST 09350-32014 (09351-32100, 09351-32140)

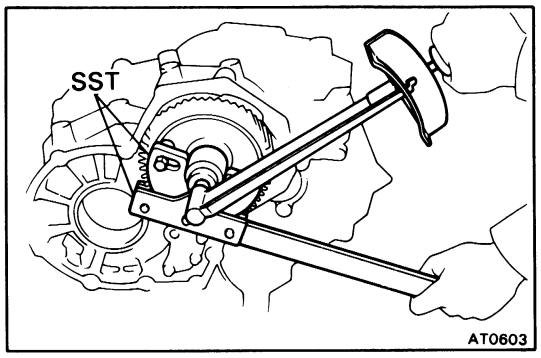

32. TIGHTEN NEW LOCK NUT

Using SST to hold the driven gear, tighten a new lock nut.

SST 09330-00021 and 09350-32014 (09351-32032)

Torque: 1,600 kg-cm (116 ft-lb, 157 N·m)

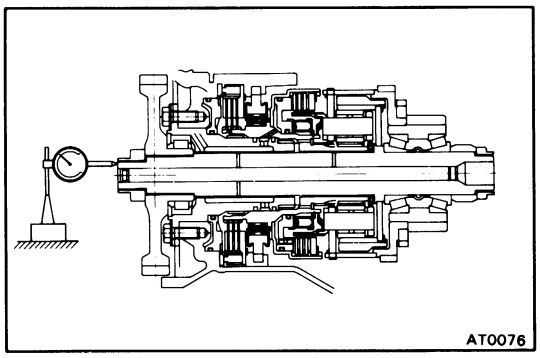

33. CHECK END PLAY OF COUNTER SHAFT

Using a dial indicator, measure the end play of the counter shaft.

End play: 0.23 – 0.89 mm (0.0091 – 0.0350 in.)

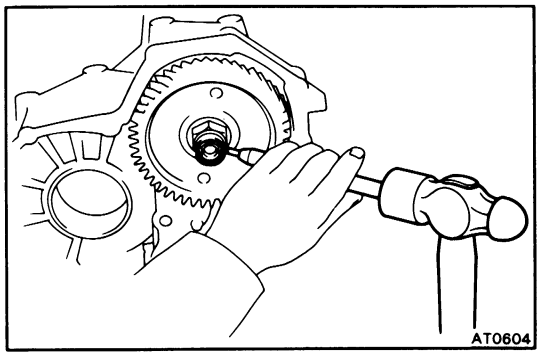

34. STAKE LOCK NUT

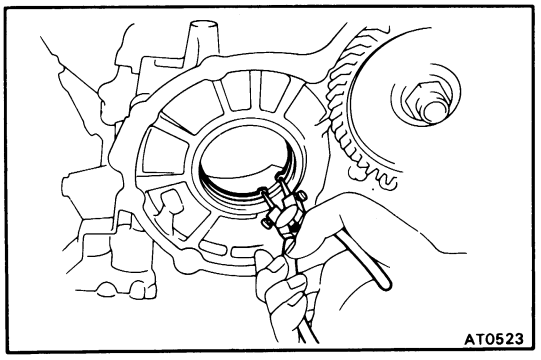

35. INSTALL SNAP RING TO TRANSMISSION CASE

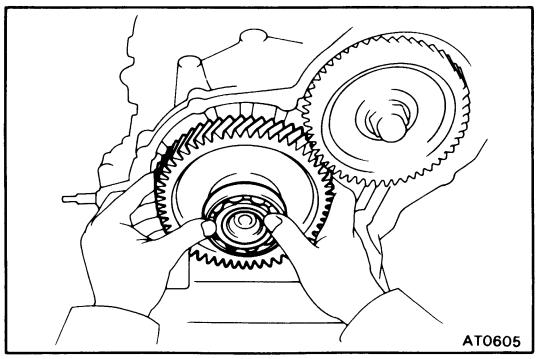

36. INSTALL INTERMEDIATE SHAFT

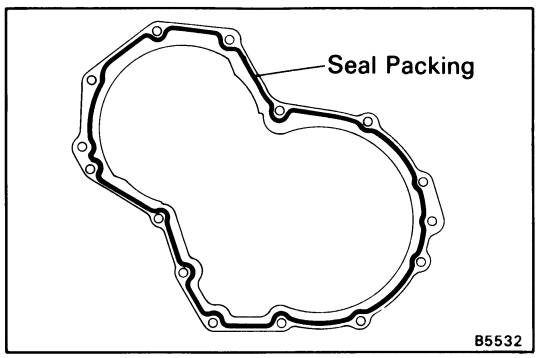

37. INSTALL TRANSAXLE REAR COVER

(a) Remove any packing material and be careful not to get oil on the contacting surfaces of the transaxle rear cover or transmission case.

(b) Apply seal packing to the rear cover as shown.

Seal packing: Part No. 08833-00090, THREE BOND 1131, LOCTITE 518 or equivalent

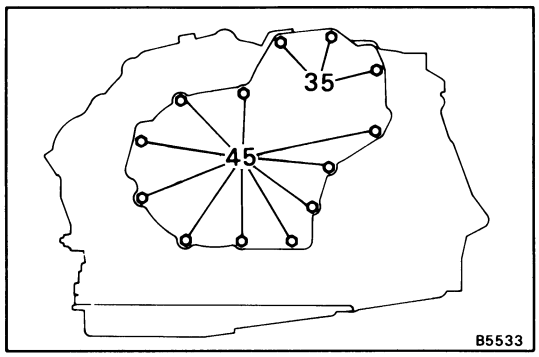

(c) Install and tighten the thirteen bolts.

Torque: 250 kg-cm (18 ft-lb, 25 N·m)

NOTE: Each bolt length (mm) is indicated in the figure.

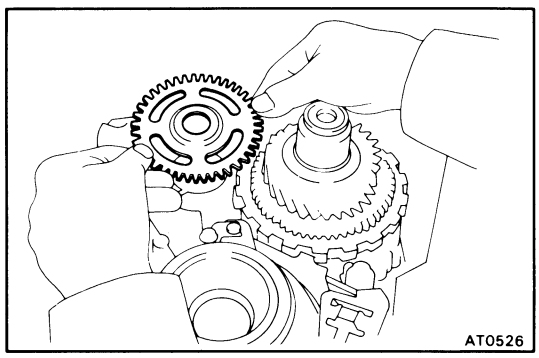

38. INSTALL THRUST WASHER AND GOVERNOR DRIVEN GEAR

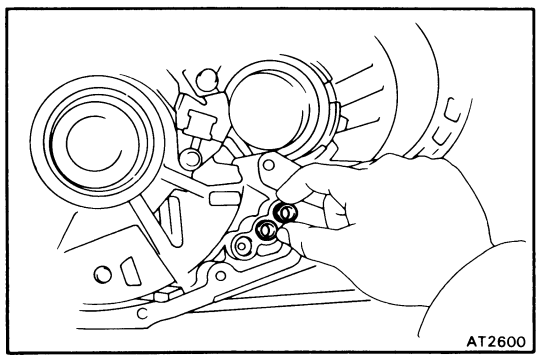

39. INSTALL NEW OIL SEALS

Install the two new oil seals.

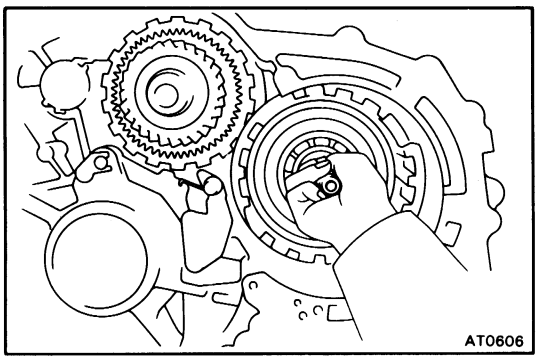

40. CHECK INTERMEDIATE SHAFT

Make sure that the intermediate shaft turns smoothly.

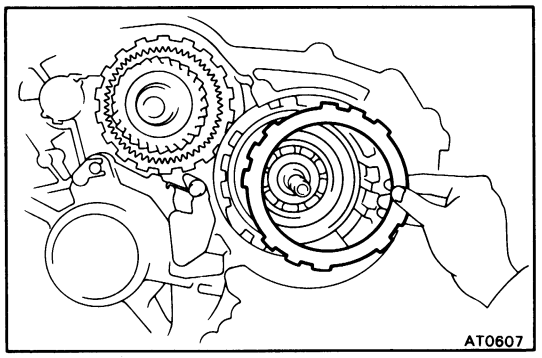

41. INSTALL FIRST AND REVERSE BRAKE IN CASE

(a) Install the inner flange, facing the flat end toward you.

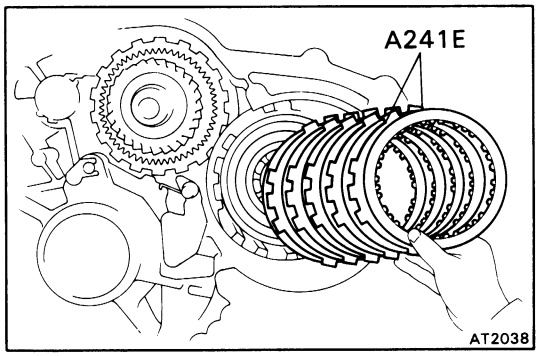

(b) Install in order:
(A240E) Disc-plate-disc-plate-disc-plate-disc-plate-disc
(A241E) Disc-plate-disc-plate-disc-plate-disc-plate-disc-plate-disc

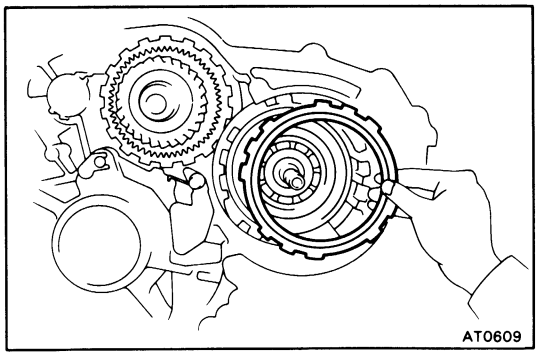

(c) Install the outer flange, facing the flat end toward the inner side.

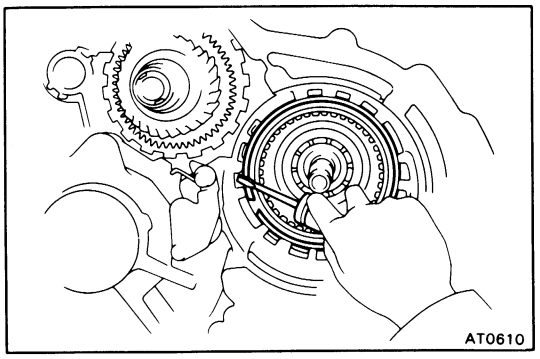

42. INSTALL SNAP RING

Be sure the snap ring end gap is not aligned with one of the cutouts.

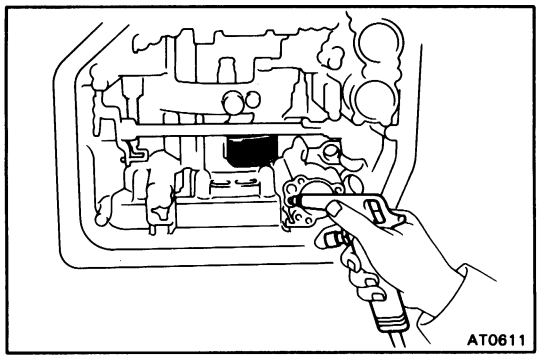

43. CHECK OPERATION OF FIRST AND REVERSE BRAKE

Apply compressed air into the oil passage with the case and be sure that the piston moves.

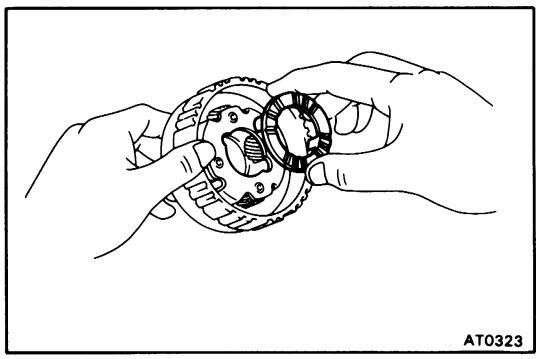

44. INSTALL NO. 2 PLANETARY CARRIER THRUST WASHER

Coat thrust washer with petroleum jelly and install it onto the planetary carrier.

NOTE: Make sure that the different lug shapes match the openings on the carrier.

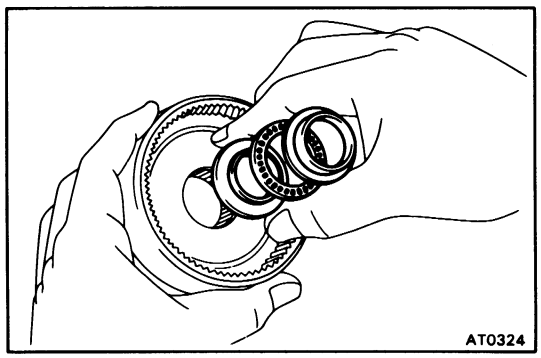

45. INSTALL RACES AND BEARING

Coat the races and bearing with petroleum jelly and install them onto the ring gear.

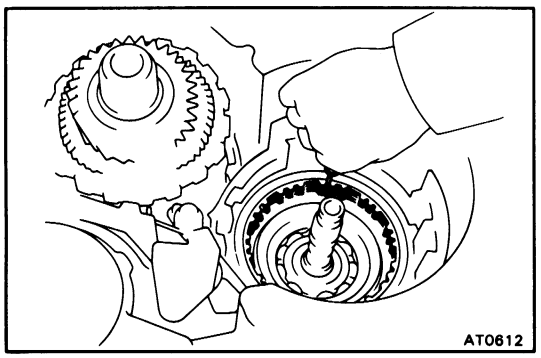

46. INSTALL REAR PLANETARY RING GEAR INTO CASE

(a) Align the flukes of the discs.

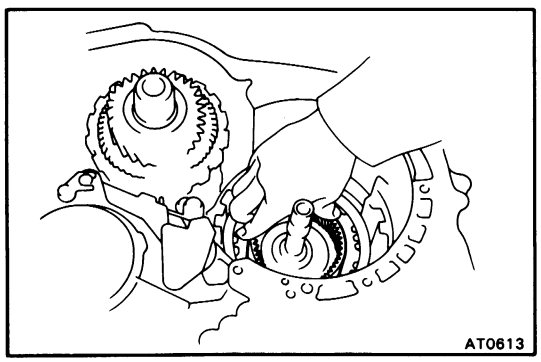

(b) Install the rear planetary ring gear into the case.

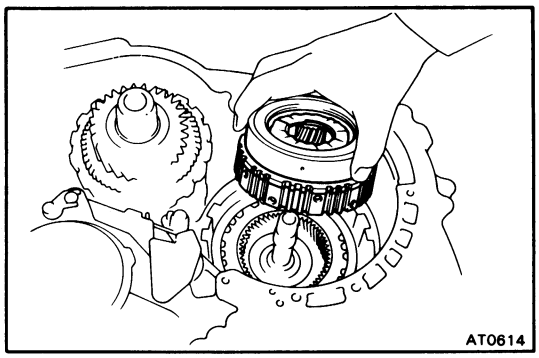

47. INSTALL REAR PLANETARY GEAR

Align the spline of the planetary carrier with the flukes of the discs and install the planetary gear into the first and reverse brake discs.

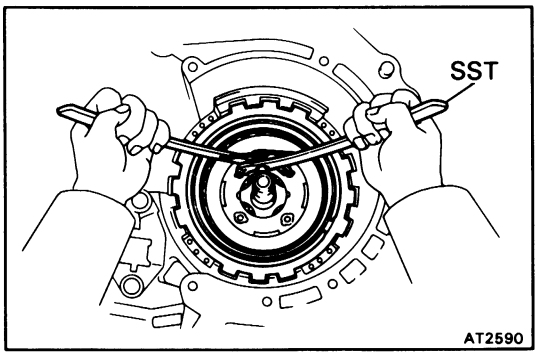

48. INSTALL NO. 2 ONE-WAY CLUTCH INTO CASE WITH SHINY SIDE UPWARD

(a) Place the one-way clutch into the case, the shiny side facing upward.

(b) Install the one-way clutch onto the inner race while turning the planetary gear clockwise with SST.

SST 09350-32014 (09351-32050)

(c) Coat the thrust washer with petroleum jelly and install it onto the planetary gear.

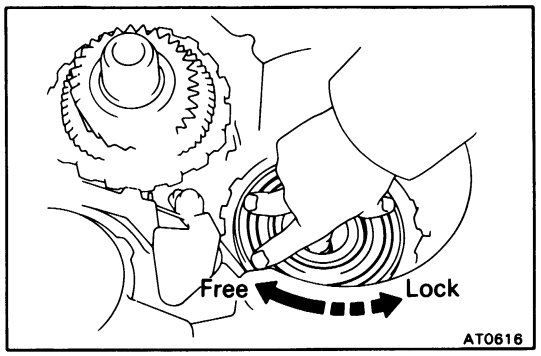

49. CHECK OPERATION OF NO. 2 ONE-WAY CLUTCH

Turn the planetary carrier. The carrier should turn freely clockwise and lock counterclockwise.

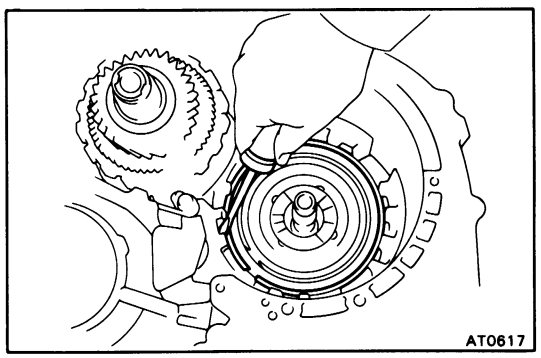

50. INSTALL SNAP RING

Be sure the end gap of the snap ring is not aligned with one of the cutouts.

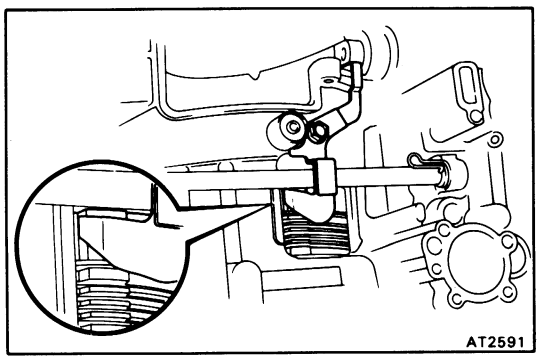

51. INSTALL SECOND COAST BRAKE BAND GUIDE

Install the band guide so that its tip touches the case.

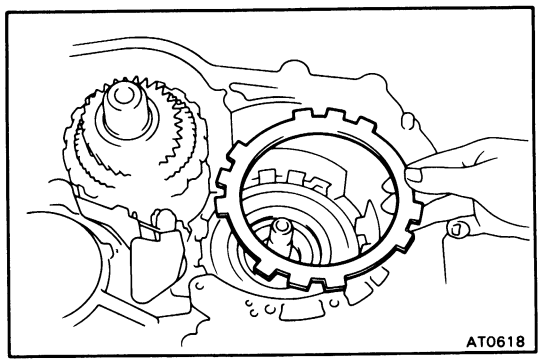

52. INSTALL SECOND BRAKE INTO CASE

(a) Install the flange, facing the flat end upward.

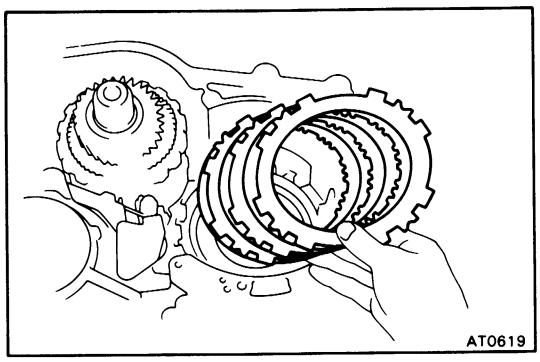

(b) Install in order: Disc-plate-disc-plate-disc-plate

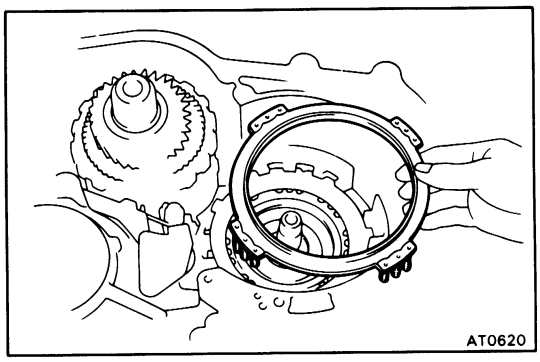

53. INSTALL PISTON RETURN SPRING ASSEMBLY

Install each of the springs over the protrusions in the case.

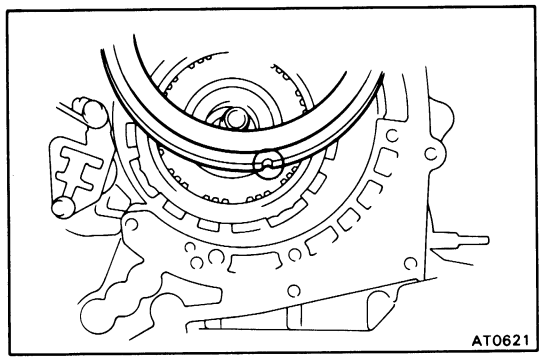

54. INSTALL SECOND BRAKE DRUM INTO CASE

Align the groove of the drum with the bolt and place it into the case.

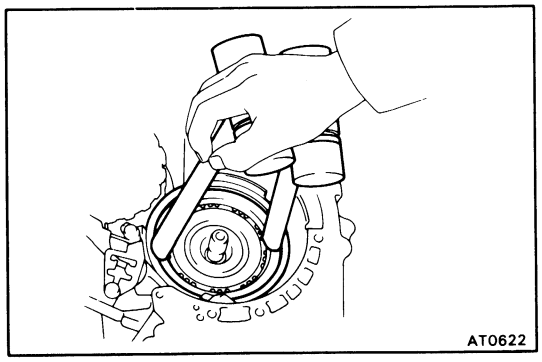

55. INSTALL SNAP RING

(a) Place the snap ring into the case so that the end gap is installed into the groove.

(b) While compressing the piston return springs over the drum with hammer handles, install the snap ring. Be sure the end gap of the snap ring is not aligned with one of the cutouts.

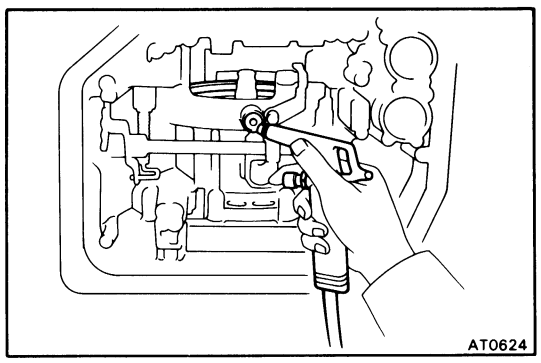

56. CHECK OPERATION OF SECOND BRAKE

Apply compressed air into the oil passage of the case, and be sure that the piston moves.

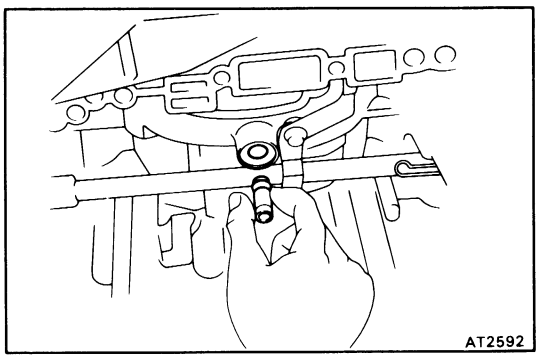

57. INSTALL SECOND BRAKE DRUM GASKET

Install a new drum gasket until it makes contact with the 2nd brake drum.

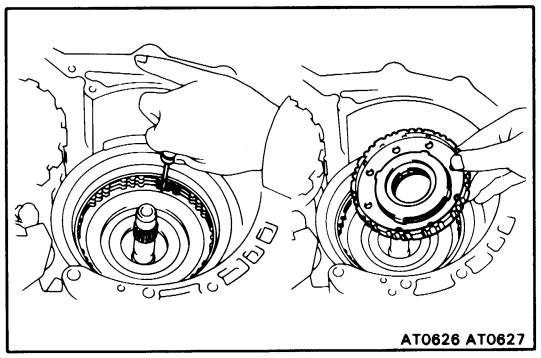

58. INSTALL NO. 1 ONE-WAY CLUTCH AND SECOND BRAKE HUB

(a) Align the flukes of the discs in the 2nd brake.

(b) Align the spline of the hub with the flukes of the discs and install the hub to the 2nd brake discs.

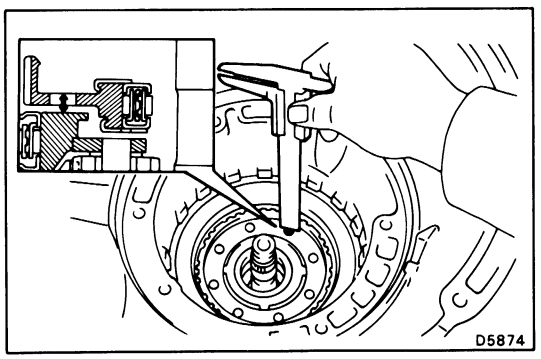

59. CHECK SECOND BRAKE HUB INSTALLATION DISTANCE

Check the distance between the surface of the 2nd brake hub and rear planetary gear.

Distance: Approx. 5 mm (0.20 in.)

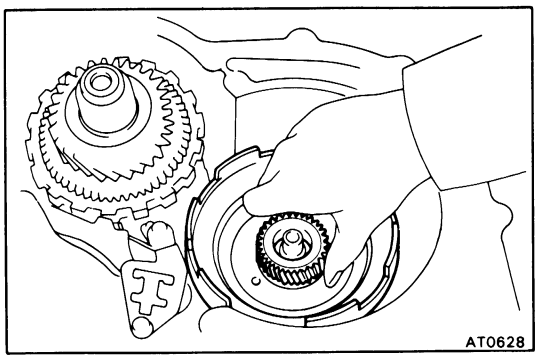

60. INSTALL SUN GEAR AND SUN GEAR INPUT DRUM

While turning the sun gear clockwise, install it into the one-way clutch.

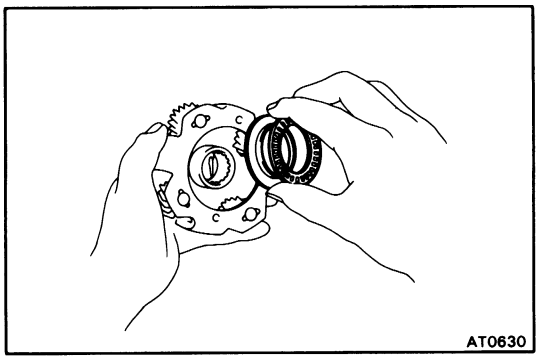

61. INSTALL RACE AND BEARING

Coat the race and the bearing with petroleum jelly and install them onto the planetary gear.

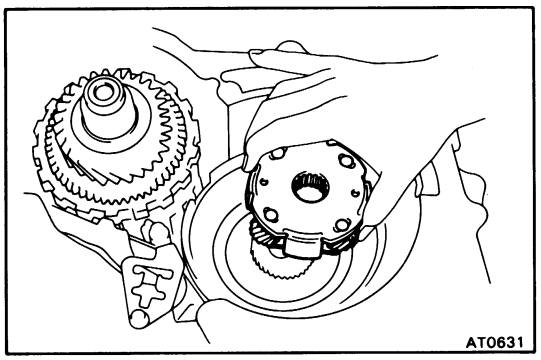

62. INSTALL FRONT PLANETARY GEAR

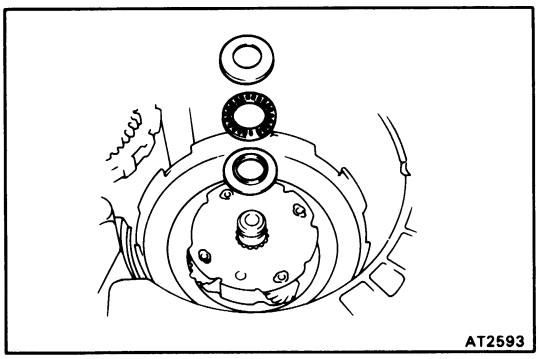

63. INSTALL RACES AND BEARING

Coat the races and the bearing with petroleum jelly and install them onto the planetary gear.

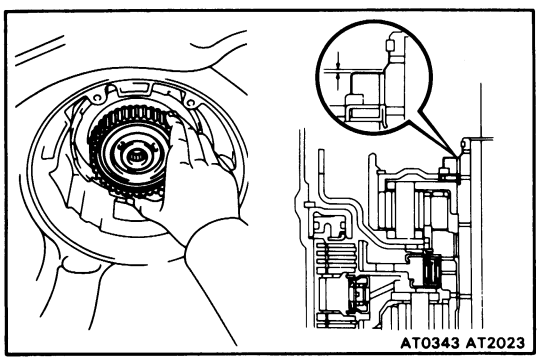

64. INSTALL FRONT PLANETARY RING GEAR

(a) If the planetary gear and the other parts are installed correctly into the case, the end of the bushing with the ring gear flange will be flush with a shoulder of the intermediate shaft or under.

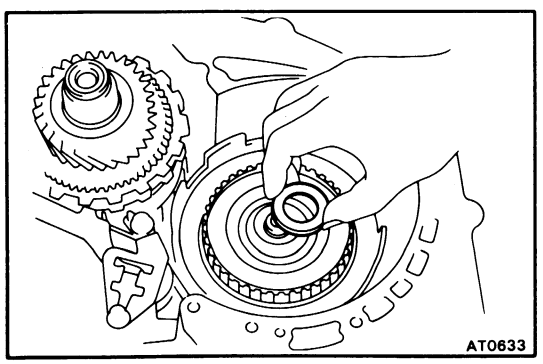

(b) Coat the race with petroleum jelly and install it onto the tip of ring gear flange.

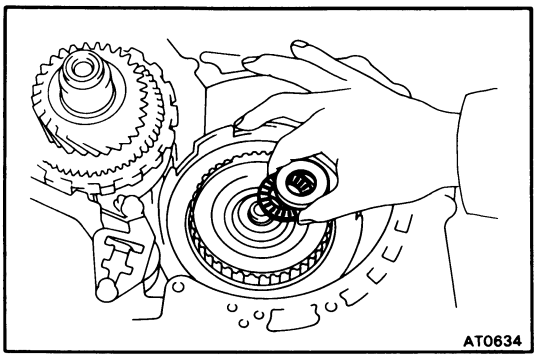

(c) Coat the race and bearing with petroleum jelly and install them.

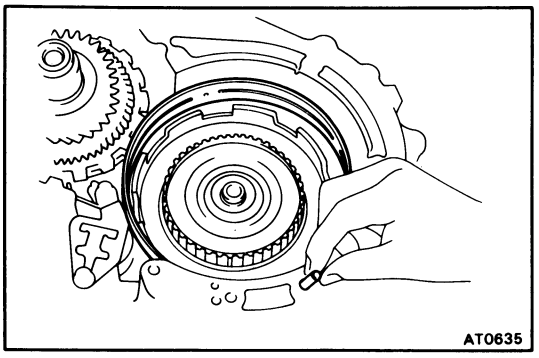

65. INSTALL SECOND COAST BRAKE BAND

(a) Place the band into the case.

(b) Install the pin through the oil pump mounting bolt hole.

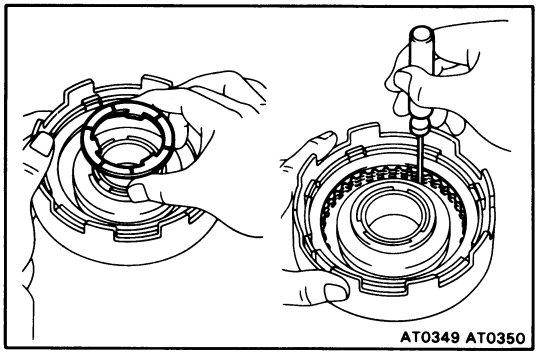

66. INSTALL FORWARD CLUTCH AND DIRECT CLUTCH

(a) Coat the race and bearing with petroleum jelly, and install them onto the forward clutch drum.

(b) Coat the clutch drum thrust washer with petroleum jelly and install it with the oil groove facing upward onto the direct clutch drum.

(c) Align the flukes of discs in the direct clutch.

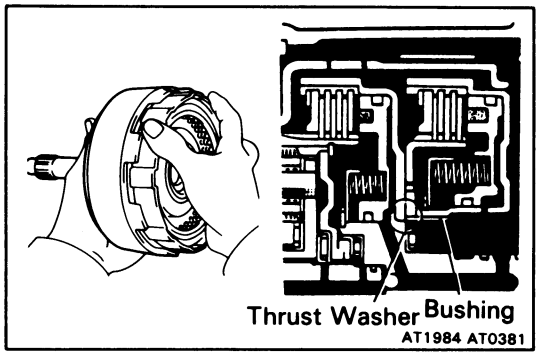

(d) Mesh the hub with the flukes of the direct clutch while turning the clutch drum or forward clutch.

(e) If the flukes of the discs are meshed with the hub correctly, the end of the bushing with the direct clutch drum will be flush with the surface of the forward clutch.

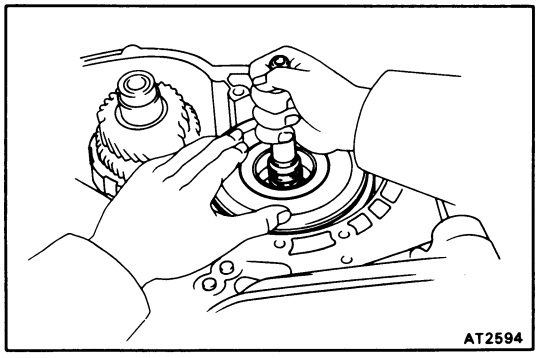

(f) Place the direct clutch and forward clutch into the case.

(g) While rotating the forward clutch to mesh the front planetary ring gear and discs.

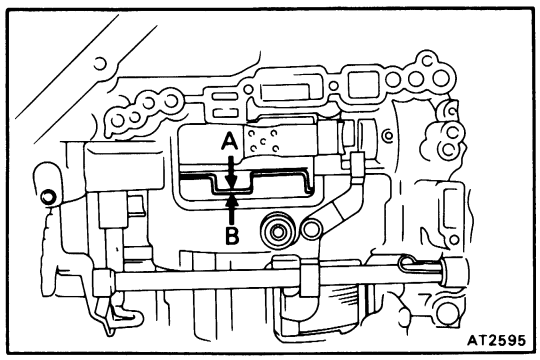

(h) Check the distance between A and B as shown in the illustration.

Distance: Approx. 3 mm (0.118 in.)

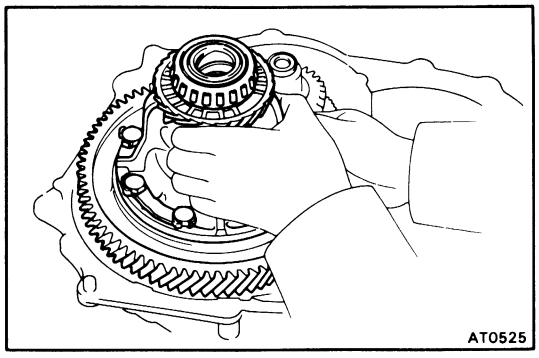

67. INSTALL DIFFERENTIAL

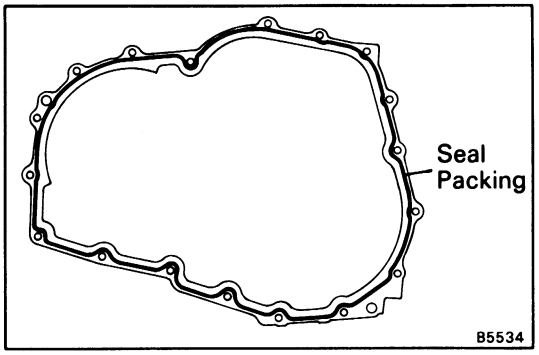

68. INSTALL TRANSAXLE HOUSING

(a) Remove any packing material and be careful not to get oil on the contacting surfaces of the transaxle housing or transmission case.

(b) Apply seal packing to the transaxle housing as shown.

Seal packing: Part No. 08833-00090, THREE BOND 1131, LOCTITE 518 or equivalent

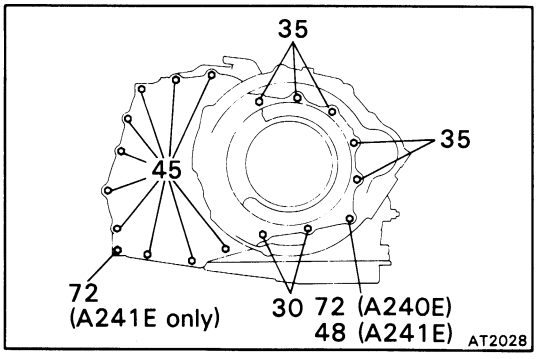

(c) Install and tighten the bolts.

(A240E) eighteen bolts
(A241E) nineteen bolts

Torque: 300 kg-cm (22 ft-lb, 29 N·m)

NOTE: Each bolt length (mm) is indicated in the figure.

69. CHECK PRELOAD OF DIFFERENTIAL SIDE BEARING (See page AT-137)

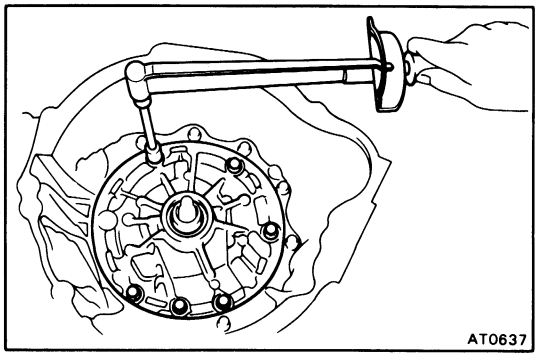

70. INSTALL OIL PUMP INTO CASE

(a) Coat the O-ring with ATF.

(b) Install the O-ring around the pump body.

(c) Place the oil pump through the input shaft, and align the bolt holes of the pump body with the transmission case.

(d) Hold the input shaft, and lightly press the oil pump body to slide the oil seal rings on the stator shaft through the direct clutch drum.

CAUTION: Do not push on the oil pump strongly or the oil seal ring will stick to the direct clutch drum.

(e) Install the six bolts.

Torque: 250 kg-cm (18 ft-lb, 25 N·m)

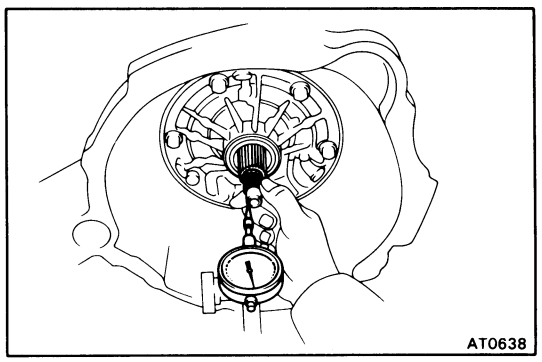

71. MEASURE THRUST PLAY OF INPUT SHAFT

Measure the thrust play in axial direction.

Thrust play: 0.2 – 0.9 mm (0.008 – 0.035 in.)

NOTE: There are two different thicknesses of races for the end of the stator shaft. If necessary, select one of them.

Race thicknesses: 0.8 mm (0.031 in.)
1.4 mm (0.055 in.)

72. CHECK INPUT SHAFT ROTATION

Make sure that the input shaft rotates smoothly.

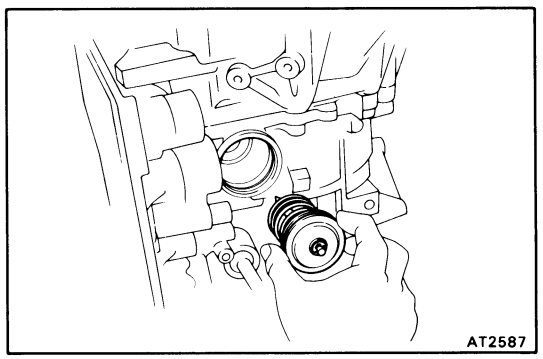

73. INSTALL SECOND COAST BRAKE PISTON

(a) Install the outer spring with the piston.

(b) Place the cover into the bore.

(c) Using SST, install the snap ring while pressing the cover.

SST 09350-32014 (09351-32050)

(d) Check that the front end of the piston rod contacts the center of the second brake band depression.

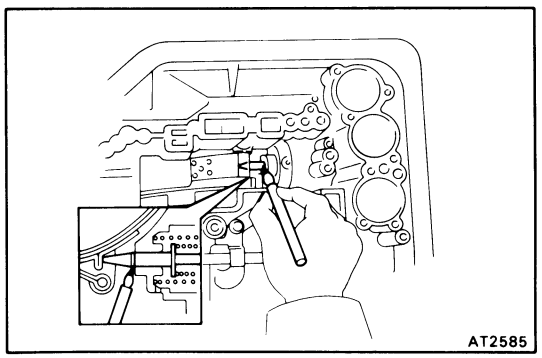

74. CHECK SECOND COAST BRAKE PISTON STROKE

(a) Apply a small amount of paint to the piston rod at the point it meets the case as shown in the illustration.

(b) Using SST, measure the piston stroke applying and releasing the compressed air (4 – 8 kg/cm², 57 – 114 psi or 392 – 785 kPa) as shown.

SST 09240-00020

Piston stroke: 1.5 – 3.0 mm (0.059 – 0.118 in.)

If the stroke is more than standard value, replace the piston rod with a longer one.

Piston rod length: 72.9 mm (2.870 in.)
71.4 mm (2.811 in.)

Remeasure the stroke. If it is still more than standard value, replace the brake band with a new one.

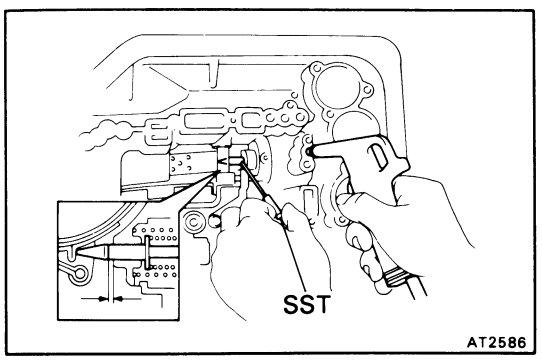

75. INSTALL ACCUMULATOR PISTONS AND SPRINGS

(a) Coat new O-rings with ATF, install them to the pistons.

(b) Install the pistons and springs.

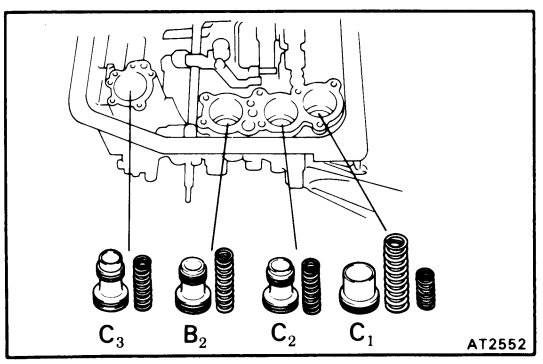

Spring			Free length mm (in.)	Color
C_1	A240E	Outer	71.10 (2.7992)	None
		Inner	42.50 (1.6732)	White
	A241E	Outer	74.07 (2.9161)	Pink
		Inner	41.00 (1.6142)	Pink
C_2			62.68 (2.4677)	Light Green
B_2	A240E		66.68 (2.6252)	Red
	A241E		66.68 (2.6252)	Gray
C_3			61.47 (2.4201)	White

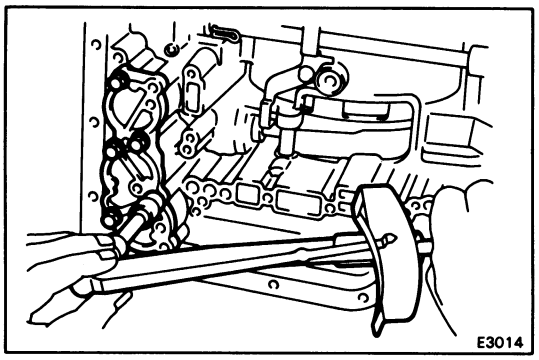

(c) Install a new gasket and accumulator cover.

Torque: 100 kg-cm (7 ft-lb, 10 N·m)

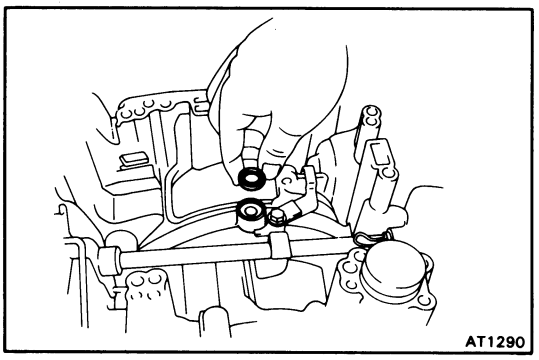

76. INSTALL SECOND BRAKE APPLY GASKET

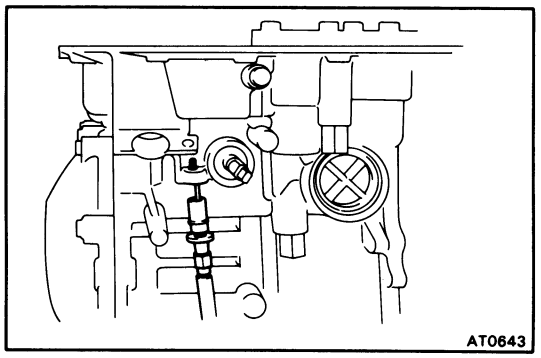

77. INSTALL THROTTLE CABLE IN CASE

Push the cable through the case, being careful not to damage the O-ring. Check for full seating.

CAUTION: In subsequent work, do not roll the case over the cable to avoid breaking the cable fitting.

78. INSTALL SOLENOID WIRE IN CASE

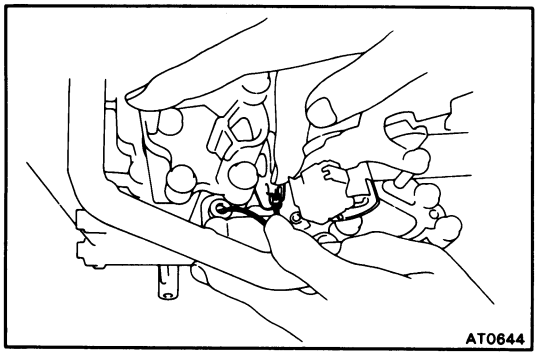

79. PLACE VALVE BODY ON TRANSMISSION

(a) While holding the cam down with your hand, slip the cable end into the slot.

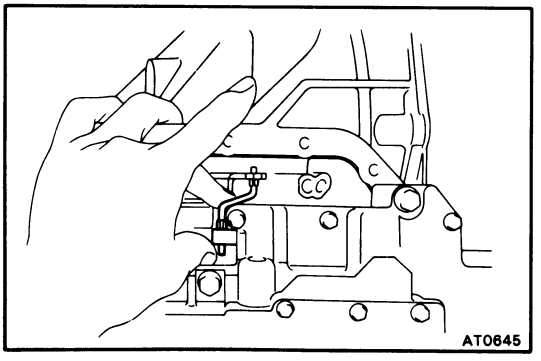

(b) Connect the connecting rod to the manual valve lever.

(c) Lower the valve body into place.

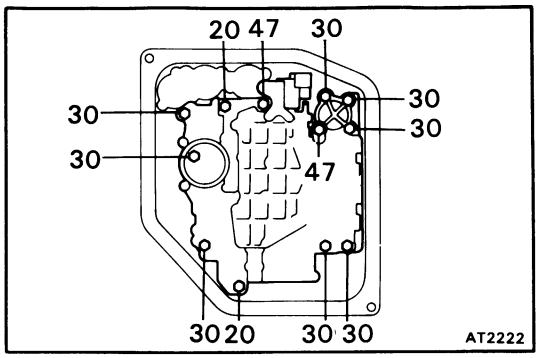

80. INSTALL THE TWELVE BOLTS IN VALVE BODY

NOTE: Each bolt length (mm) is indicated in the figure.

Hand tighten all the bolts first. Then, tighten them with a torque wrench.

Torque: 100 kg-cm (7 ft-lb, 10 N·m)

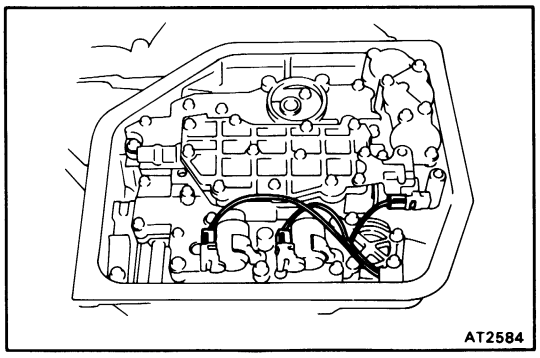

81. CONNECT SOLENOID CONNECTORS

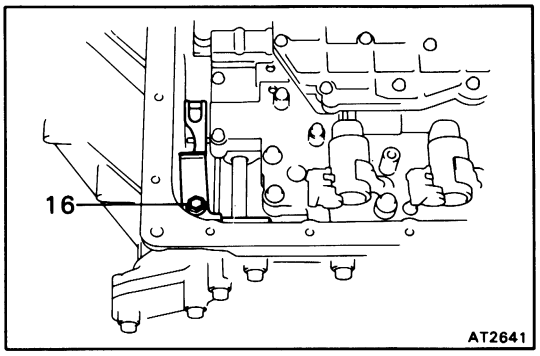

82. INSTALL DETENT SPRING

The bolt length (mm) is indicated in the figure.

(a) Hand tighten the bolt first. Then, tighten it with a torque wrench.

Torque: 100 kg-cm (7 ft-lb, 10 N·m)

(b) Check that the manual valve lever is in contact with the center of the roller at the tip of the detent spring.

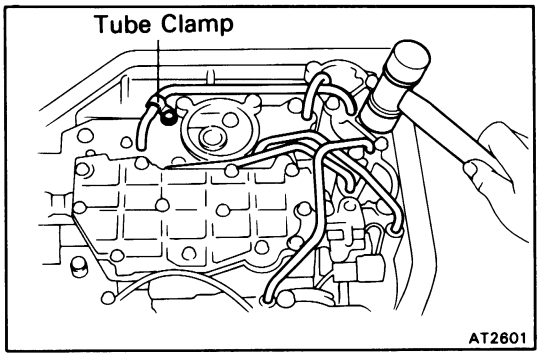

83. INSTALL OIL TUBES

(a) Tap the tubes with a plastic hammer to install them into the positions indicated in the figure.

CAUTION: Be careful not to bend or damage the tubes.

(b) Install the oil tube clamp.

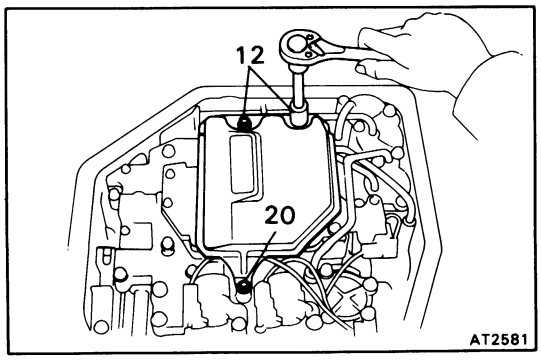

84. INSTALL OIL STRAINER

NOTE: Each bolt length (mm) is indicated in the figure.

Torque: 100 kg-cm (7 ft-lb, 10 N·m)

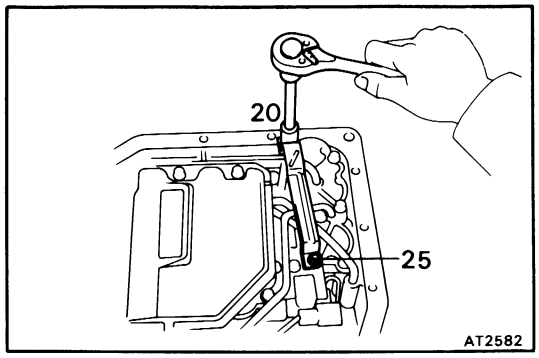

85. INSTALL OIL TUBE BRACKET

Each bolt length (mm) is indicated in the figure.

Torque: 100 kg-cm (7 ft-lb, 10 N·m)

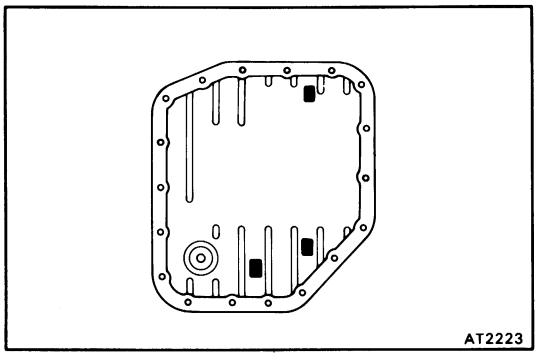

86. INSTALL MAGNETS IN PLACE AS SHOWN

CAUTION: Make sure that the magnet does not interfere with the oil tubes.

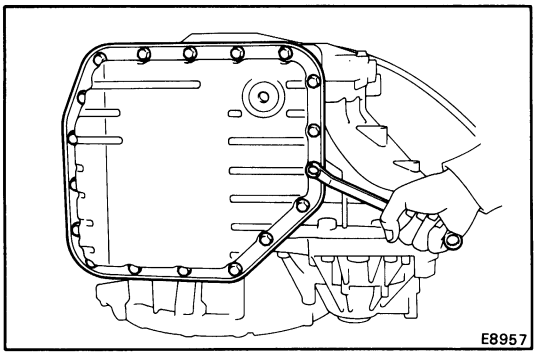

87. INSTALL OIL PAN WITH NEW GASKET

TORQUE: 50 kg-cm (43 in.-lb, 4.9 N·m)

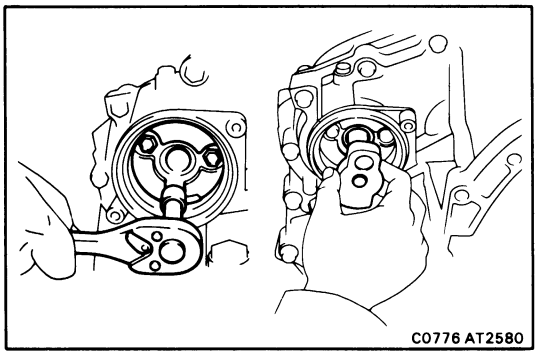

88. INSTALL SPEED SENSOR

(a) Install the sensor rotor adaptor.

(b) Install the sensor rotor.

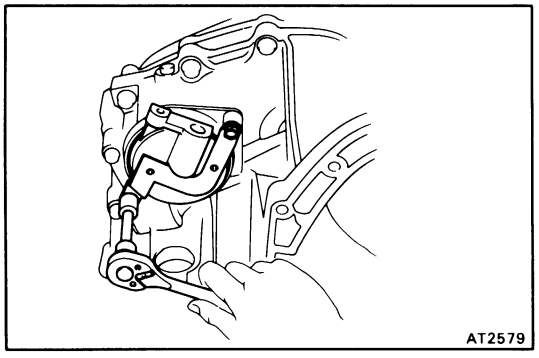

(c) Install the sensor cover.

(d) Install the speed sensor.

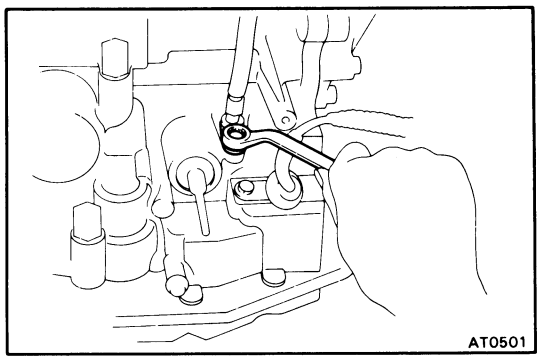

89. INSTALL THROTTLE CABLE RETAINING PLATE

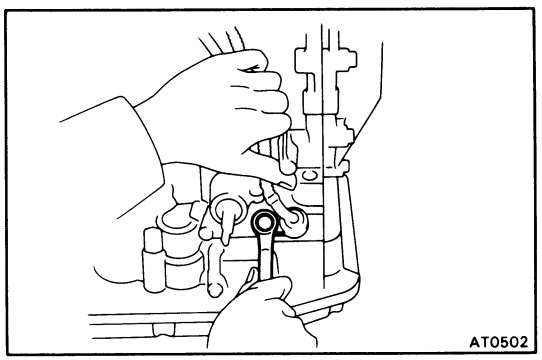

90. INSTALL SOLENOID WIRE RETAINING PLATE

91. INSTALL NEUTRAL START SWITCH

Tighten the nut and stake it with the lock washer.

Torque: 70 kg-cm (61 in.-lb, 6.9 N·m)

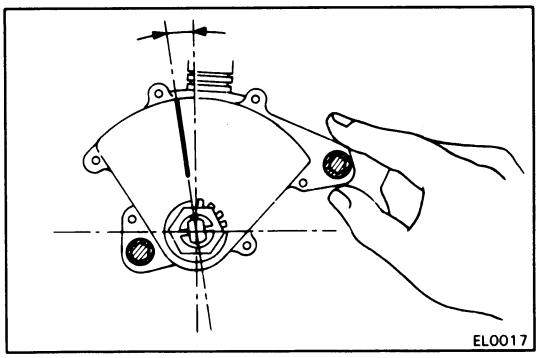

92. ADJUST NEUTRAL START SWITCH
(See page AT-6)

93. INSTALL MANUAL SHIFT LEVER

94. INSTALL THE OIL COOLER PIPES

Torque: 350 kg-cm (25 ft-lb, 34 N·m)

DIFFERENTIAL

COMPONENTS

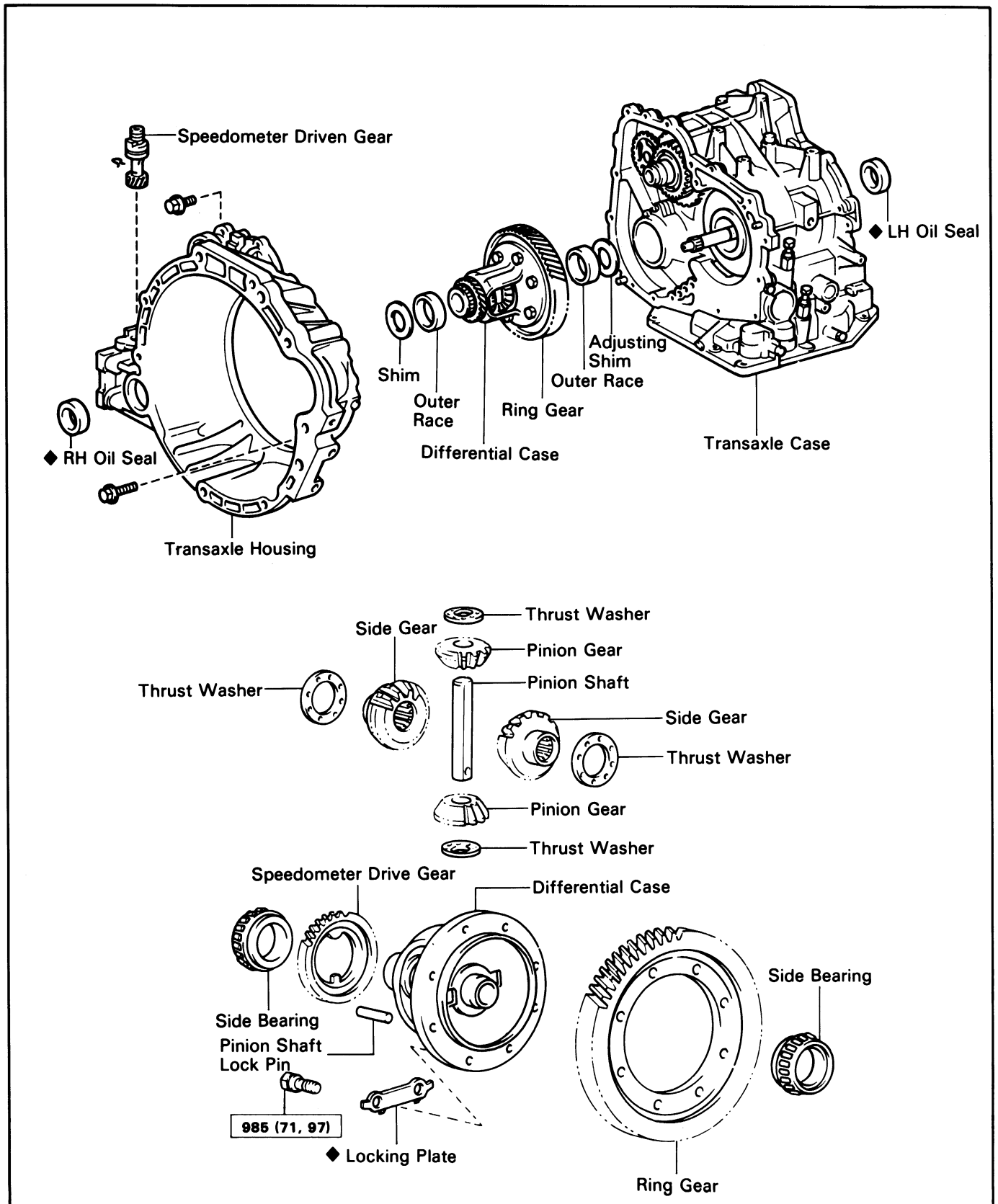

kg-cm (ft-lb, N·m) : Specified torque

◆ Non-reusable part

B5853
AT1075

REMOVAL OF DIFFERENTIAL

1. **REMOVE SPEEDOMETER DRIVEN GEAR**

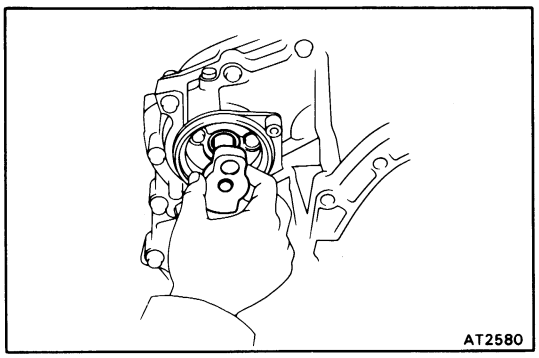

2. **REMOVE SPEED SENSOR AND SENSOR ROTOR (See page AT-49)**

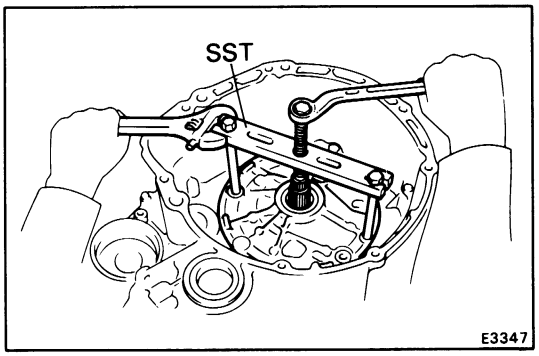

3. **REMOVE OIL PUMP (See page AT-53)**
   SST 09350-32014 (09351-32061)

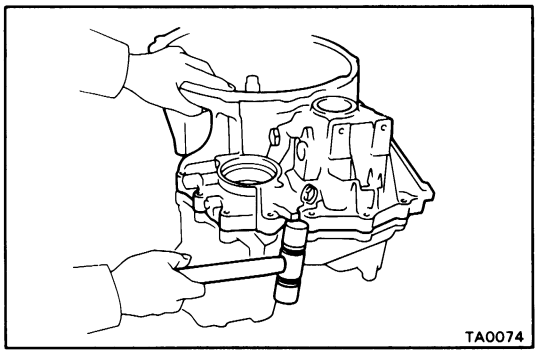

4. **REMOVE TRANSAXLE HOUSING (See page AT-59)**

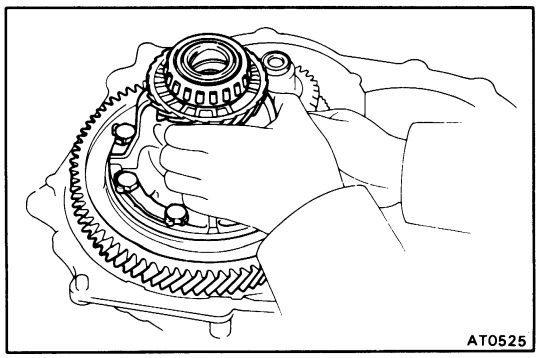

5. **REMOVE DIFFERENTIAL**

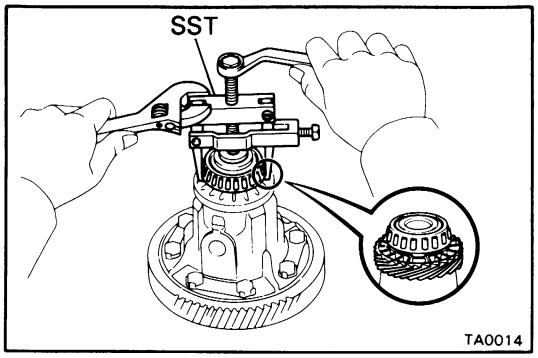

REPLACEMENT OF DIFFERENTIAL

1. REPLACE SIDE BEARING FROM DIFFERENTIAL CASE

(a) Setting SST to the cut-out portion on the speedometer drive gear, remove the bearings from both sides of the case.

SST 09502-10012

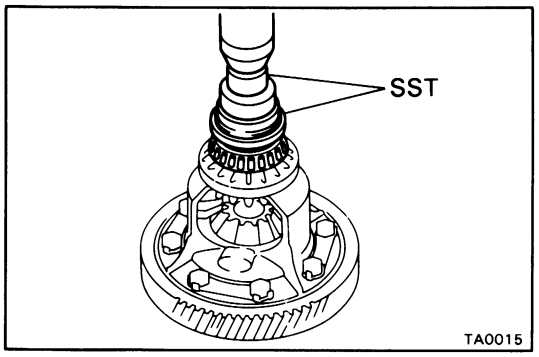

(b) Using SST and a press, press the side bearings onto the differential case.

SST 09350-32014 (09351-32090, 09351-32120)

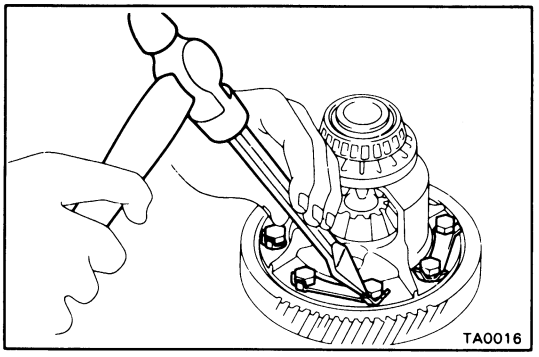

2. REPLACE RING GEAR

(a) Loosen the staked part of the lock plate.

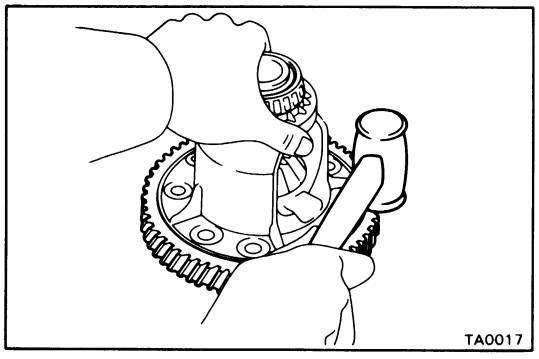

(b) Remove the eight bolts and locking plates.

(c) Using a copper hammer, tap on the ring gear to remove it from the case.

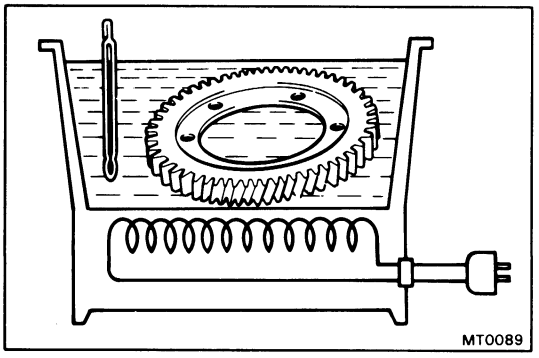

(d) Clean the contact surface of the differential case.

(e) Heat the ring gear to about 100°C (212°F) in an oil bath.

CAUTION: Do not heat the ring gear above 110°C (230°F).

(f) Clean the contact surface of the ring gear with cleaning solvent.

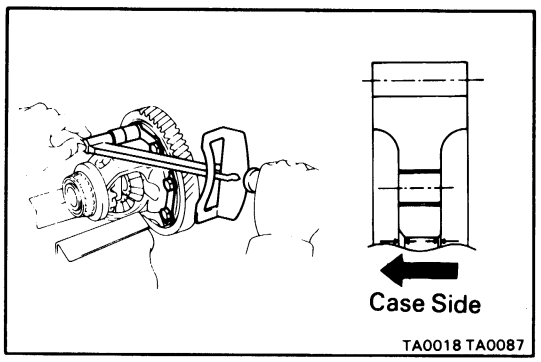

(g) Quickly install the ring gear on the differential case.

(h) Install new locking plates and set bolts.
Tighten the set bolts uniformly and a little at a time.
Torque the bolts.

Torque: 985 kg-cm (71 ft-lb, 97 N·m)

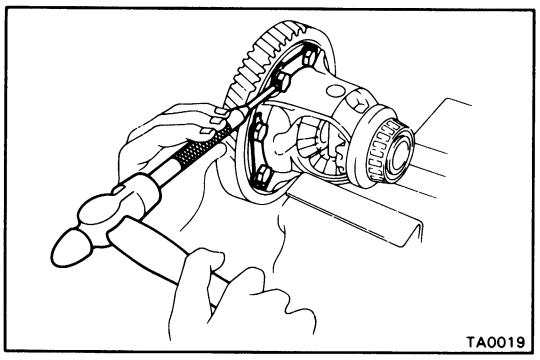

(i) Using a hammer and drift punch, stake the locking plates.

NOTE: Stake one claw flush with the flat surface of the nut. For the claw contacting the protruding portion of the nut, stake only the half on the tightened side.

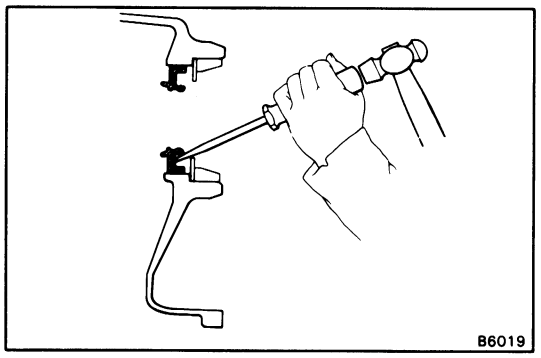

REPLACEMENT OF OIL SEAL AND OUTER RACE

1. REPLACE LH OIL SEAL

(a) Remove the oil seal.

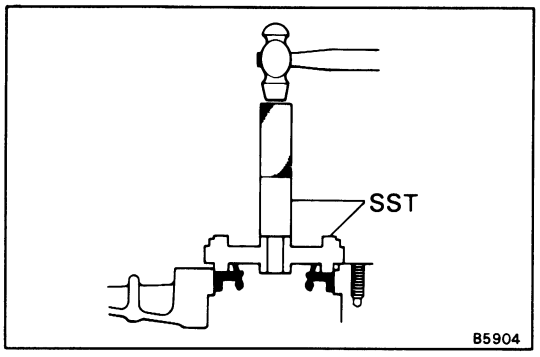

(b) Using SST, drive in a new oil seal.

SST 09350-32014 (09351-32130, 09351-32150)

(c) Coat the lip of the oil seal with MP grease.

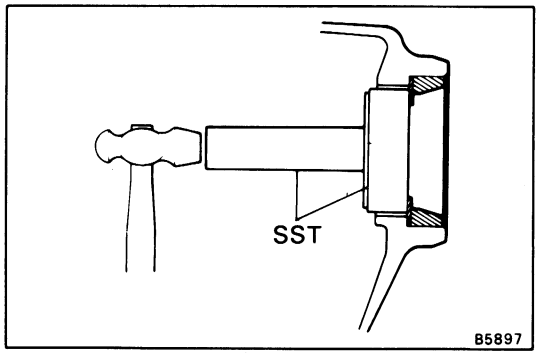

2. REPLACE LH SIDE BEARING OUTER RACE

(a) Remove the oil seal.

(b) Using SST, drive out the outer race and shim.

SST 09350-32014 (09351-32130, 09351-32150)

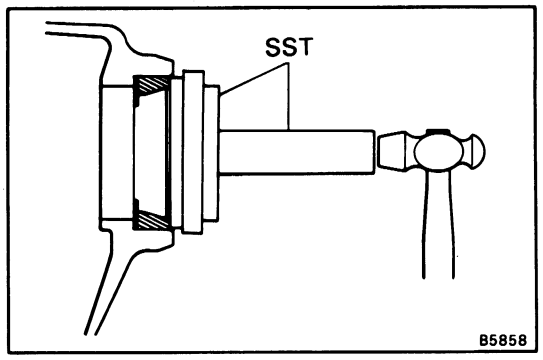

(c) Place the shim onto the transaxle case.

(d) Using SST, drive in a new outer race into the transaxle case.

SST 09350-32014 (09351-32111, 09351-32130)

(e) Install a new oil seal.

(f) Coat the lip of the oil seal with MP grease.

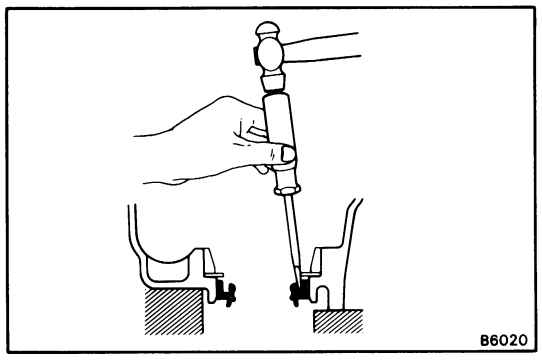

3. REPLACE RH OIL SEAL

(a) Remove the oil seal.

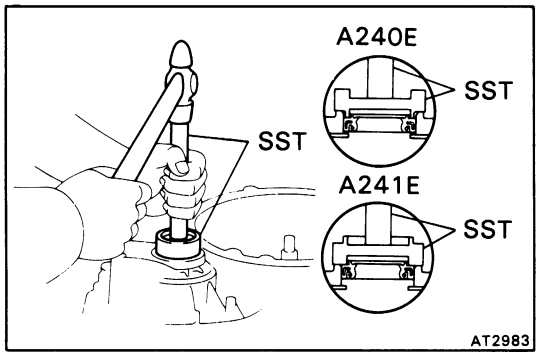

(b) Using SST, drive in a new oil seal.

SST 09350-32014 (09351-32130, 09351-32150)

(c) Coat the lip of the oil seal with MP grease.

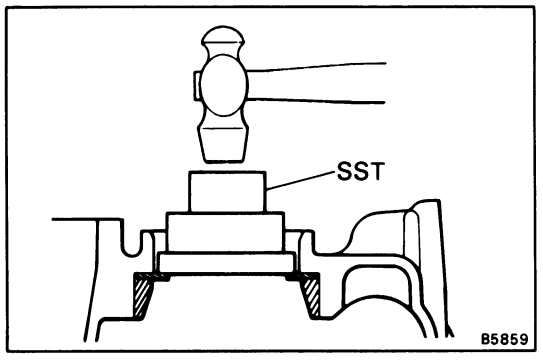

4. REPLACE RH SIDE BEARING OUTER RACE

(a) Remove the oil seal.

(b) Using SST, drive out the outer race and shim.

SST 09350-32014 (09351-32090)

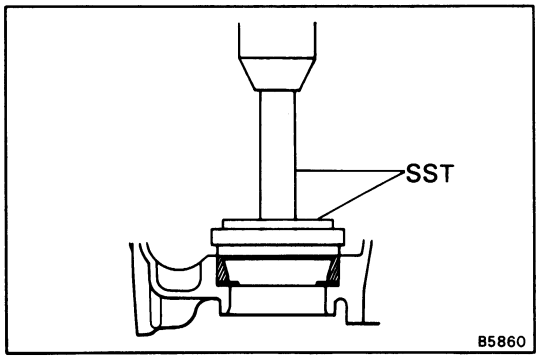

(c) Place the shim onto the transaxle case.

(d) Using SST, press a new outer race into the transaxle case.

SST 09350-32014 (09351-32111, 09351-32130)

(e) Install a new oil seal.

(f) Coat the lip of the oil seal with MP grease.

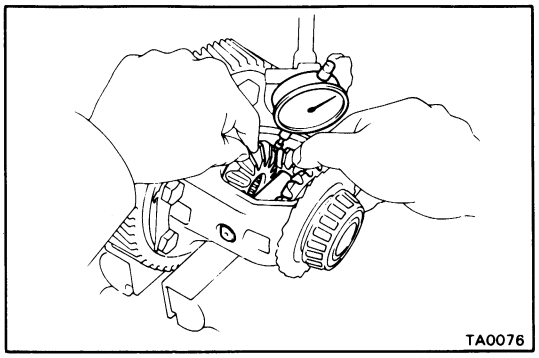

ADJUSTMENT OF DIFFERENTIAL CASE

1. CHECK SIDE GEAR BACKLASH

Measure the backlash of the side gear while holding one pinion toward the case.

Standard backlash:
0.05 – 0.20 mm (0.0020 – 0.0079 in.)

If the backlash is out of specification, install the correct thrust washer to the side gears.

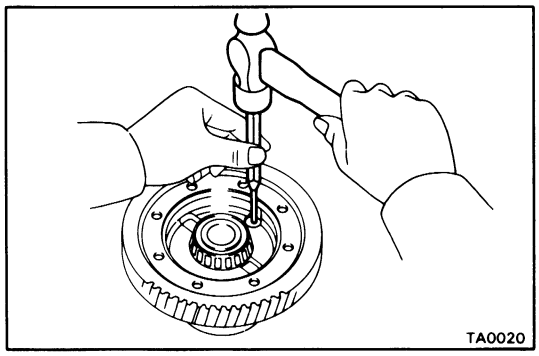

2. DISASSEMBLE DIFFERENTIAL CASE

(a) Drive out the pinion shaft lock pin from the side on which the ring gear is installed.

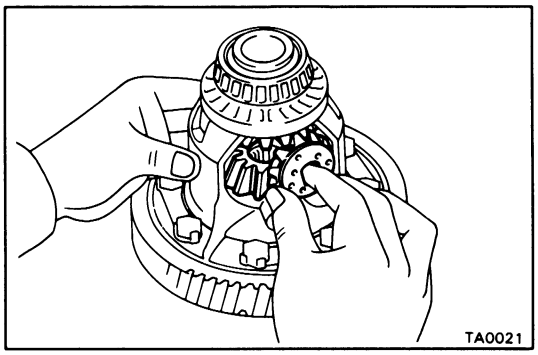

(b) Remove the pinion shaft from the case.

(c) Remove the two pinions, two side gears and four thrust washers.

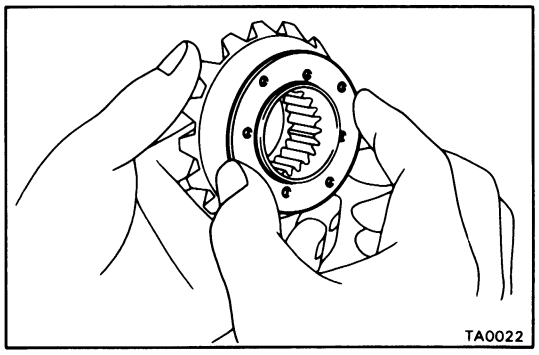

3. ASSEMBLE DIFFERENTIAL CASE

(a) Install the removed thrust washers to the side gears.

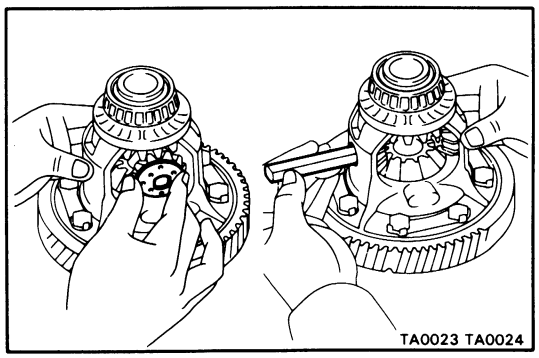

(b) Install the side gears with pinion thrust washers and pinion gears in the differential case.

(c) Install the pinion shaft.

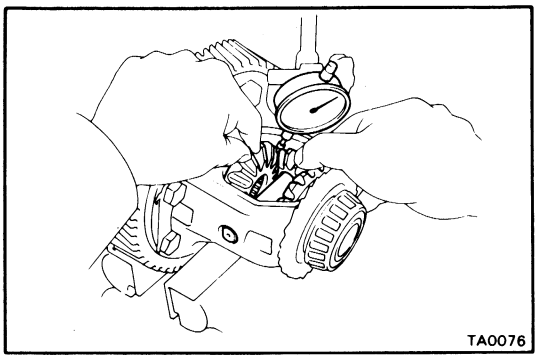

(d) Check the side gear backlash.
Measure the side gear backlash while holding one pinion gear toward the case.

Standard backlash: 0.05 – 0.20 mm (0.0020 – 0.0079 in.)

(e) Refering to the table below, select thrust washers which will ensure that the backlash is within specification. Try to select washers of the same size of both sides.

Thrust washer thicknesses

Thickness	mm (in.)	Thickness	mm (in.)
0.95	(0.0374)	1.10	(0.0433)
1.00	(0.0394)	1.15	(0.0453)
1.05	(0.0413)	1.20	(0.0472)

(f) If the backlash is not within specification, install a thrust washer of a different thickness.

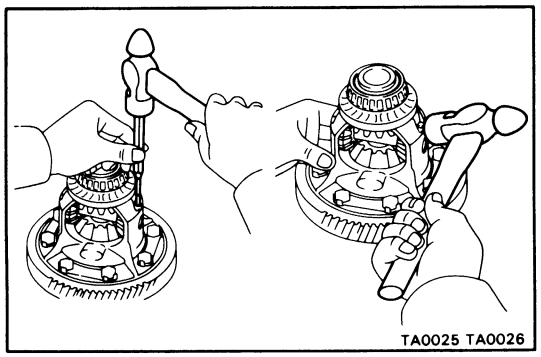

(g) Install the lock pin.
(1) Using a hammer and a punch, drive the lock pin through the case and hole in the pinion shaft.
(2) Stake the differential case.

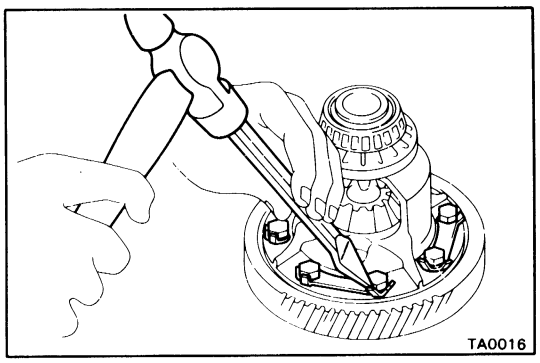

ADJUSTMENT OF DIFFERENTIAL SIDE BEARING PRELOAD

1. REMOVE RING GEAR FROM DIFFERENTIAL
(See page AT-132)

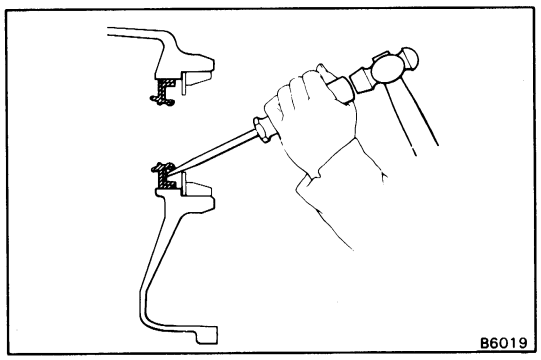

2. REPLACE LH ADJUSTING SHIM

(a) Remove the LH oil seal.

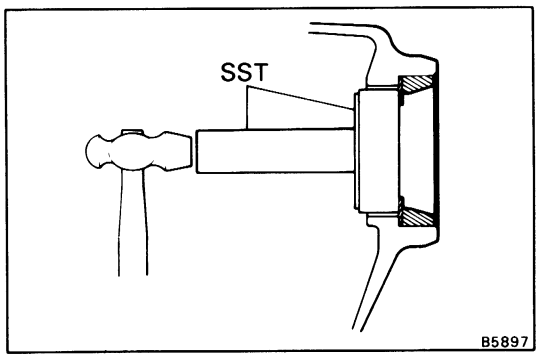

(b) Using SST, drive out the outer race and shim.

SST 09350-32014 (09351-32130, 09351-32150)

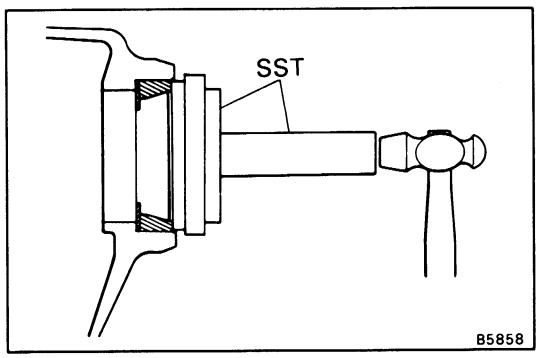

(c) Place 2.40 mm (0.0945 in.) shim onto the transaxle case.

(d) Using SST, press the outer race into the transaxle case.

SST 09350-32014 (09351-32111, 09351-32130)

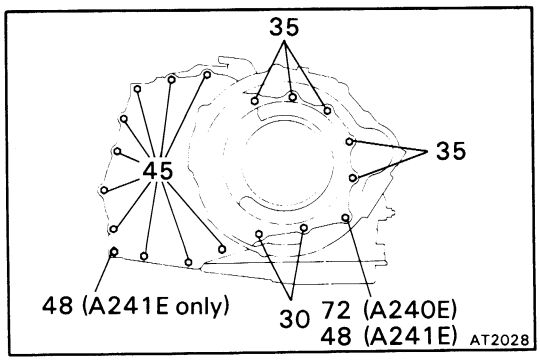

3. INSTALL DIFFERENTIAL CASE

(a) Install the differential case to the transaxle case.

(b) Install the transaxle housing and tighten the bolts.

Torque: 300 kg-cm (22 ft-lb, 29 N·m)

NOTE: Each bolt length (mm) is indicated in the figure.

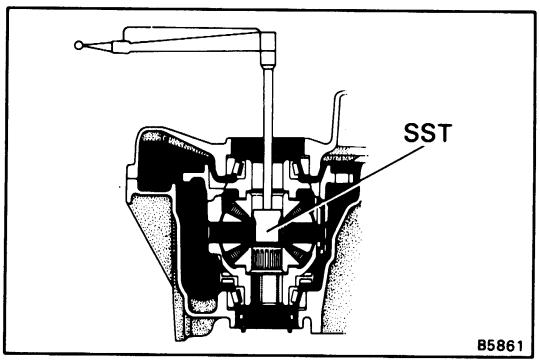

4. ADJUST DIFFERENTIAL SIDE BEARING PRELOAD

(a) Rotate the differential in both directions to snug the bearing down.

(b) Using SST and a torque meter, measure the preload of the side bearing.

SST 09564-32011

Preload (at starting):

New bearing	**8 – 14 kg-cm (6.9 – 12.2 in.-lb, 0.8 – 1.4 N·m)**
Reused bearing	**4 – 7 kg-cm (3.5 – 6.1 in.-lb, 0.4 – 0.7 N·m)**

If the preload is not within specification, remove the differential from the transaxle case.
Re-select LH adjusting shim.

Thickness mm (in.)		Thickness mm (in.)	
2.00	(0.0787)	2.50	(0.0984)
2.05	(0.0807)	2.55	(0.1004)
2.10	(0.0827)	2.60	(0.1024)
2.15	(0.0846)	2.65	(0.1043)
2.20	(0.0866)	2.70	(0.1063)
2.25	(0.0886)	2.75	(0.1083)
2.30	(0.0906)	2.80	(0.1102)
2.35	(0.0925)	2.85	(0.1122)
2.40	(0.0945)	2.90	(0.1142)
2.45	(0.0965)		

NOTE: The preload will change about 3 – 4 kg-cm (2.6 – 3.5 in.-lb, 0.3 – 0.4 N·m) with each shim thickness.

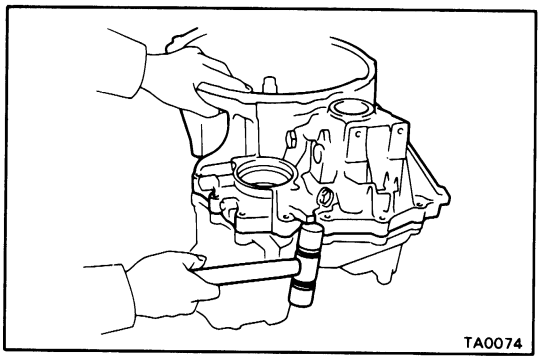

5. REMOVE DIFFERENTIAL

(a) Remove the transaxle housing.

(b) Remove the differential from the transaxle case.

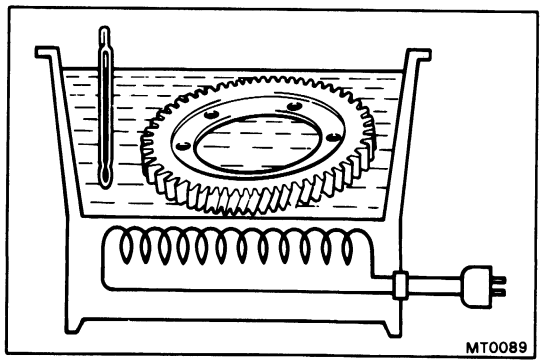

6. INSTALL RING GEAR TO DIFFERENTIAL CASE
(See page AT-132)

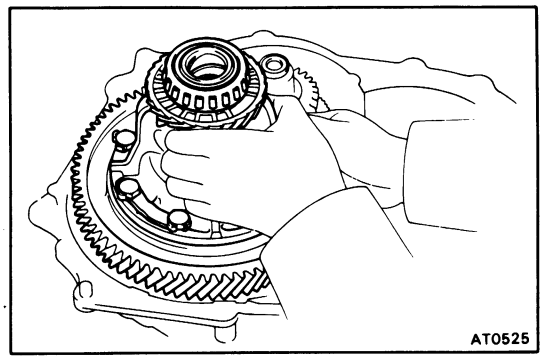

INSTALLATION OF DIFFERENTIAL

1. INSTALL DIFFERENTIAL

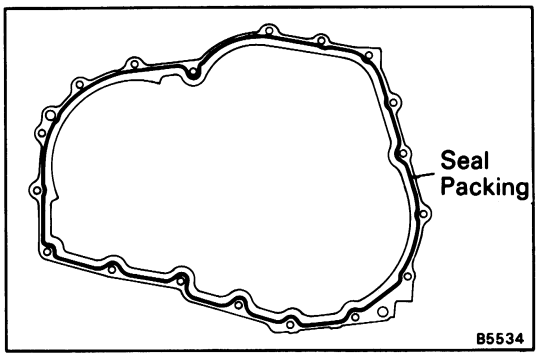

2. INSTALL TRANSAXLE HOUSING

(a) Remove any packing material and be careful not to get oil on the contacting surfaces of the transaxle housing or transmission case.

(b) Apply seal packing to the transaxle housing as shown.

Seal packing: Part No. 08833-00090, THREE BOND 1131, LOCTITE 518 or equivalent

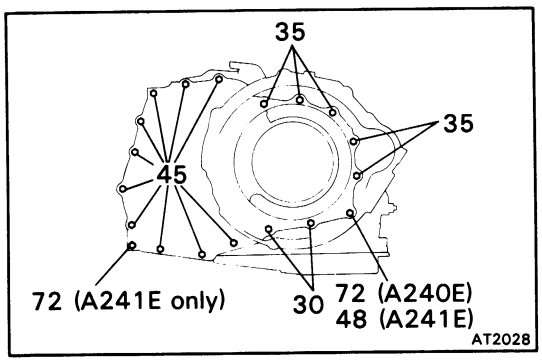

(c) Install and tighten the eighteen bolts.

Torque: 300 kg-cm (22 ft-lb, 29 N·m)

NOTE: Each bolt length (mm) is indicated in the figure.

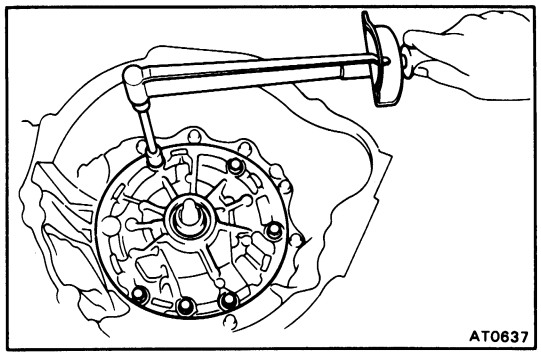

3. INSTALL OIL PUMP
(See page AT-124)

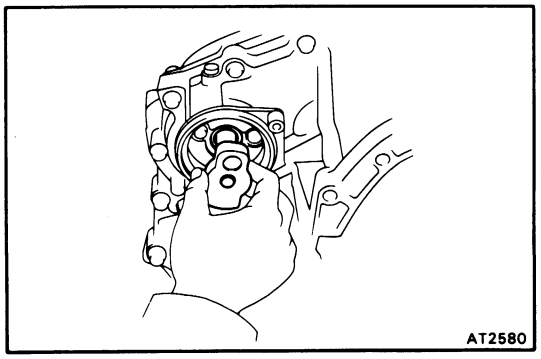

4. INSTALL SENSOR ROTOR AND SPEED SENSOR
(See page AT-128)

5. INSTALL SPEEDOMETER DRIVEN GEAR

INSTALLATION OF TRANSAXLE

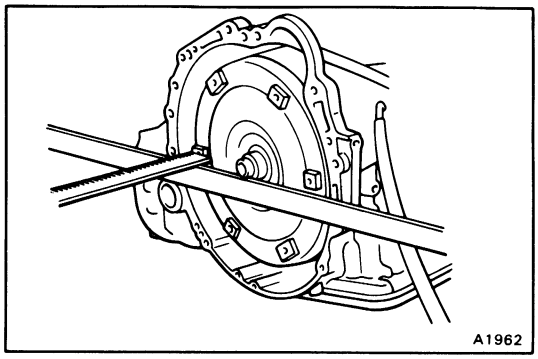

1. INSTALL TORQUE CONVERTER IN TRANSMISSION

2. CHECK TORQUE CONVERTER INSTALLATION

Using calipers and a straight edge, measure from the installed surface to the front surface of the transmission housing.

Correct distance: 23 mm (0.906 in.) or more

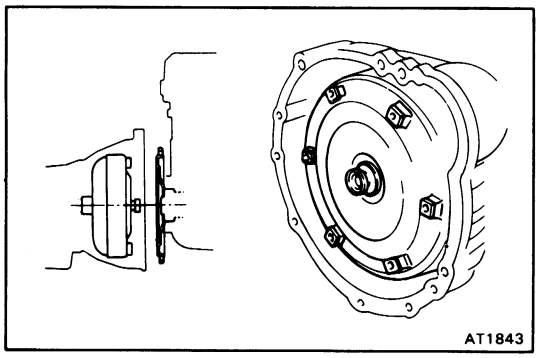

3. ALIGN TRANSMISSION AT INSTALLATION POSITION

(a) Align the two knock pins on the block with the converter housing.

(b) Temporarily install one bolt.

4. INSTALL TRANSMISSION HOUSING MOUNTING BOLTS

Torque: 650 kg-cm (47 ft-lb, 64 N·m)

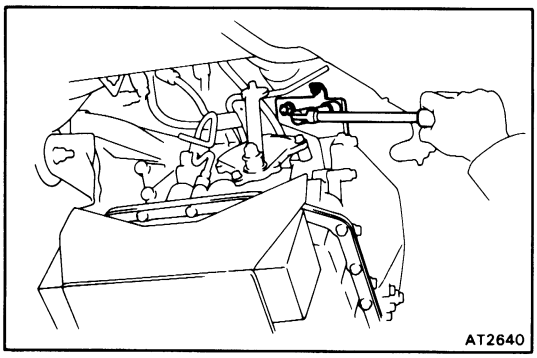

5. INSTALL TRANSMISSION MOUNTING SET BOLTS

Torque: 1,150 kg-cm (83 ft-lb, 113 N·m)

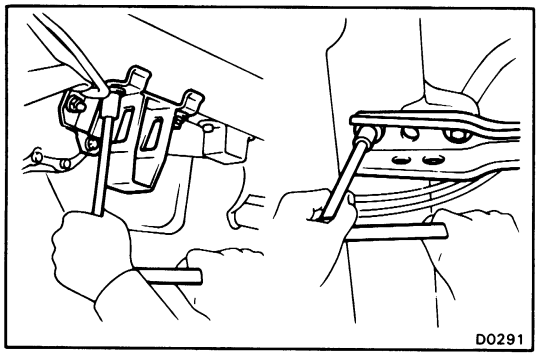

6. INSTALL FRONT AND REAR MOUNTING BOLTS

Torque: 530 kg-cm (38 ft-lb, 52 N·m)

7. INSTALL DRIVE SHAFTS
(See Page RA-32)

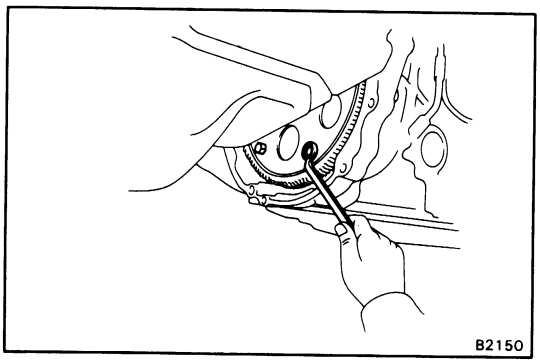

8. INSTALL TORQUE CONVERTER MOUNTING BOLTS

(a) First, install the gray bolt and then five black bolts.

(b) Tighten the bolts evenly.

Torque: A240E 280 kg-cm (20 ft-lb, 27 N·m)
A241E 420 kg-cm (30 ft-lb, 41 N·m)

9. INSTALL ENGINE REAR END PLATE

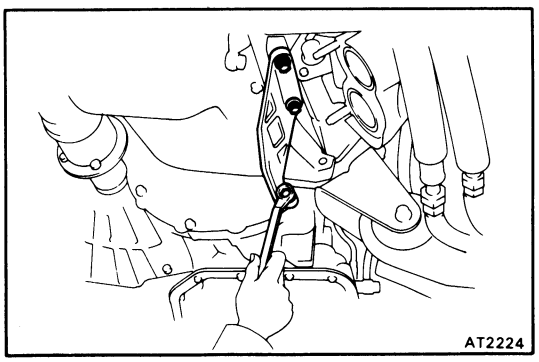

10. INSTALL STIFFENER PLATE

Torque: 380 kg-cm (27 ft-lb, 37 N·m)

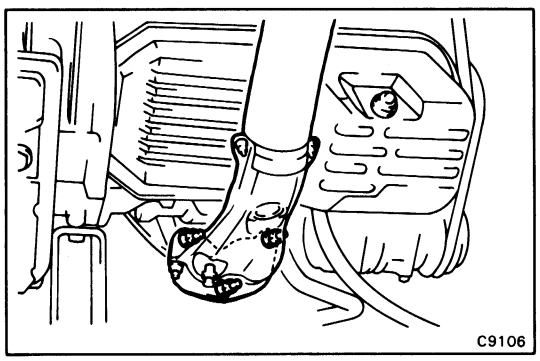

11. INSTALL EXHAUST PIPE

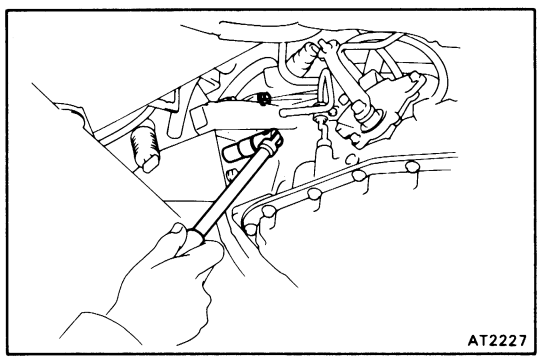

12. INSTALL STARTER MOTOR SET BOLTS

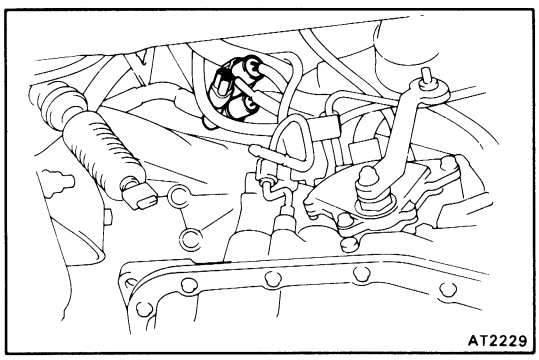

13. CONNECT THE THREE CONNECTORS

Connect the two neutral start switch connectors and the solenoid connector.

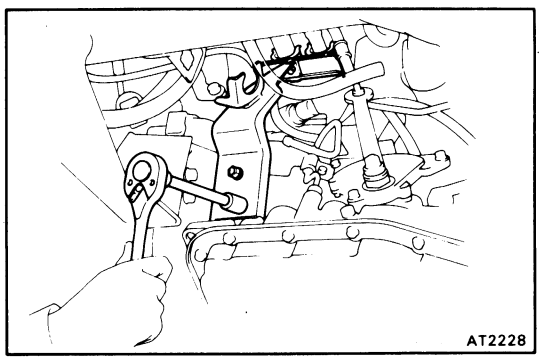

14. INSTALL CONTROL CABLE BRACKET

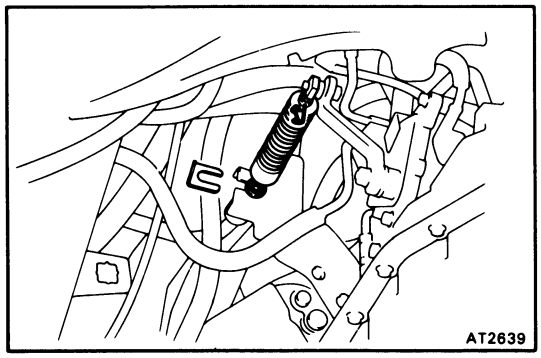

15. CONNECT CONTROL CABLE

(a) Connect the control cable.

(b) Install the retainer.

(c) Install the clip.

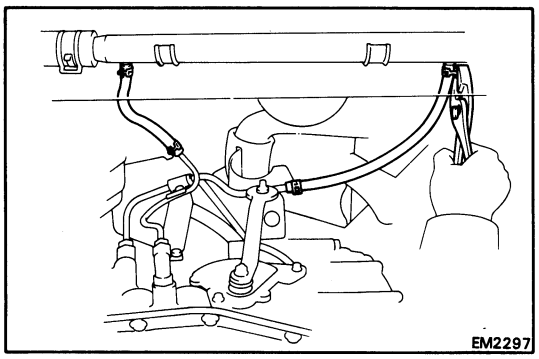

16. CONNECT OIL COOLER HOSES

17. CONNECT SPEEDOMETER CABLE

18. INSTALL ENGINE UNDER COVER

19. INSTALL REAR LH WHEEL

20. LOWER VEHICLE

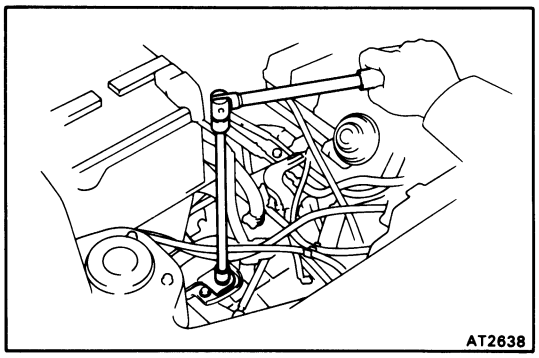

21. INSTALL TRANSMISSION MOUNTING SET BOLT

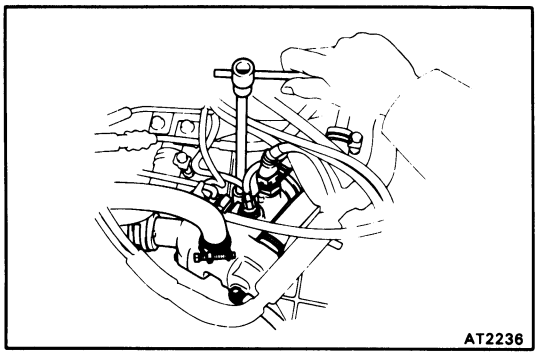

22. INSTALL WATER INLET SET BOLTS AND CONNECT GROUND STRAP

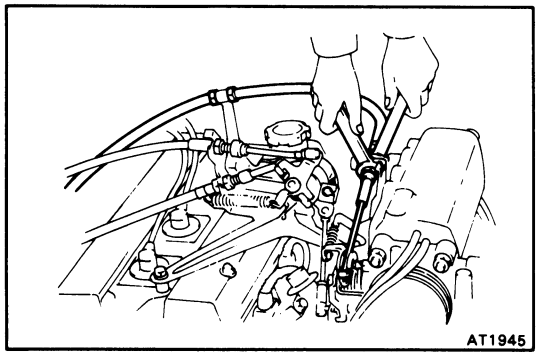

23. CONNECT THROTTLE CABLE TO THROTTLE LINKAGE AND BRACKET

24. ADJUST THROTTLE CABLE (See page AT-6)

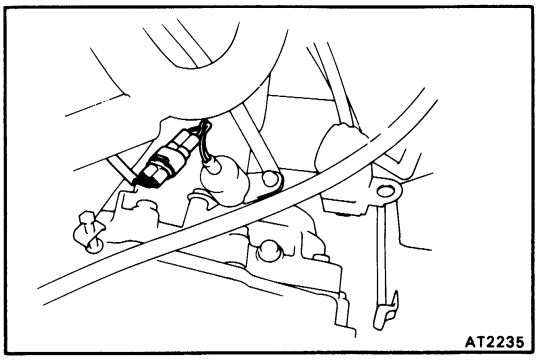

25. CONNECT SPEED SENSOR CONNECTOR

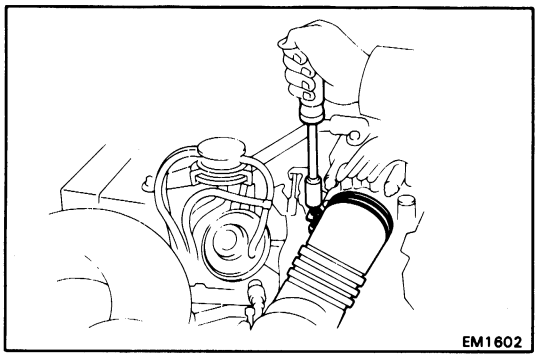

26. INSTALL AIR FLOW METER AND AIR CLEANER HOSE

27. CONNECT NEGATIVE BATTERY TERMINAL

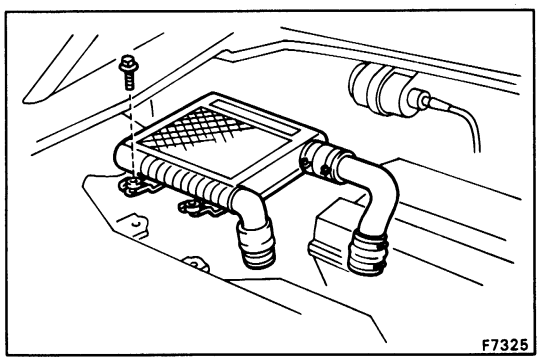

28. (A241E/4A-GZE)
INSTALL INTERCOOLER

Connect the two hose clamps, and install the four bolts and intercooler.

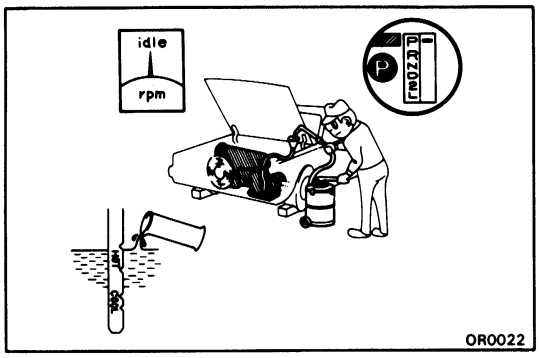

29. FILL TRANSAXLE WITH ATF

Fluid type: ATF DEXRON® II
CAUTION: Do not overfill.

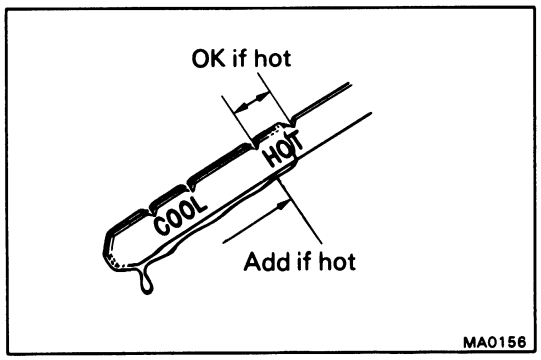

30. CHECK FLUID LEVEL (See page AT-5)

FRONT AXLE AND SUSPENSION

	Page
TROUBLESHOOTING	FA-2
FRONT WHEEL ALIGNMENT	FA-3
FRONT AXLE HUB	FA-7
FRONT SHOCK ABSORBER	FA-15
FRONT SUSPENSION	FA-20
Ball Joint	FA-20
Lower Arm	FA-21
Stabilizer Bar and Link	FA-23
Strut Bar	FA-25

TROUBLESHOOTING

Problem	Possible cause	Remedy	Page
Wanders/pulls	Tires worn or improperly inflated	Inflate tires to proper pressure or replace tires	FA-3
	Alignment incorrect	Check front end alignment	FA-3
	Hub bearing worn	Replace hub bearing	FA-8
	Front or rear suspension parts loose or broken	Tighten or replace suspension parts	FA-20
	Steering linkage loose or worn	Tighten or replace steering linkage	SR-14
	Steering gear out of adjustment or broken	Adjust or repair steering gear	SR-14
Bottoming	Vehicle overloaded	Check loading	
	Shock absorber worn out	Replace shock absorber	FA-20
	Springs weak	Replace spring	FA-20
Sways/pitches	Tires improperly inflated	Inflate tires to proper pressure	FA-3
	Stabilizer bar bent or broken	Inspect stabilizer bar	FA-20
	Shock absorber worn out	Replace shock absorber	FA-14
Front wheel shimmy	Tires worn or improperly inflated	Replace tires or inflate to proper pressure	FA-3
	Wheels out of balance	Balance wheels	
	Shock absorber worn out	Replace shock absorber	FA-14
	Alignment incorrect	Check front end alignment	FA-3
	Hub bearing worn	Replace hub bearing	FA-8
	Ball joints or bushings worn	Inspect ball joints and bushings	FA-20
	Steering linkage loose or worn	Tighten or replace steering linkage	SR-14
	Steering gear out of adjustment or broken	Adjust or repair steering gear	SR-14
Abnormal tire wear	Tires improperly inflated	Inflate tires to proper pressure	FA-3
	Shock absorbers worn out	Replace shock absorber	FA-14
	Alignment incorrect	Check toe-in	FA-3
	Suspension parts worn	Replace suspension parts	FA-20

FRONT WHEEL ALIGNMENT

1. MAKE FOLLOWING CHECKS AND CORRECT ANY PROBLEMS

(a) Check the tires for wear and proper inflation.

Tire size: 185/60 R 14 82 H

Cold tire pressure: 2.1 kg/cm² (30 psi, 206 kPa)

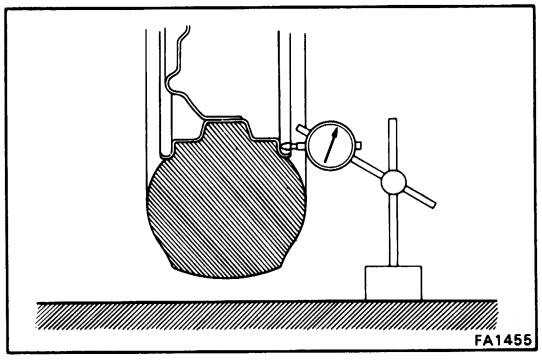

(b) Check the wheel runout.

Lateral runout: 1.2 mm (0.047 in.) or less

(c) Check the front wheel bearings for looseness.

(d) Check the front suspension for looseness.

(e) Check the steering linkage for looseness.

(f) Check that the front absorbers work properly by using the standard bounce test.

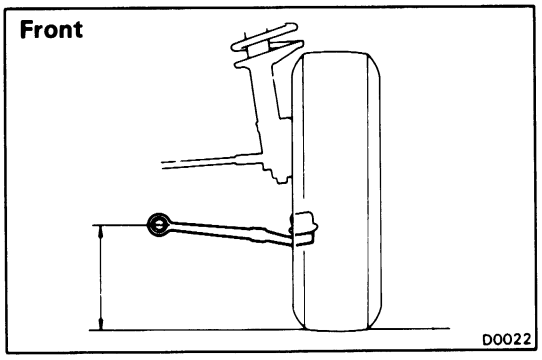

2. MEASURE CHASSIS GROUND CLEARANCE

Chassis ground clearance:

Front 221 mm (8.70 in.)
Rear 205 mm (8.07 in.)

If the clearance of the vehicle is not as specified, try to level the vehicle by rocking it down.

If still not correct, check for bad springs or suspension parts.

NOTE: When measuring the chassis ground clearance, measure from the ground to the center of the bolt.

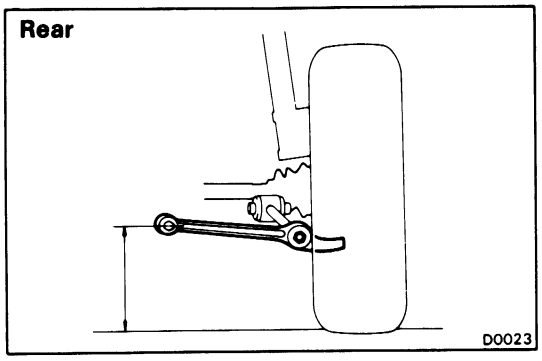

3. INSTALL WHEEL ALIGNMENT EQUIPMENT

Follow the specific instructions of the equipment manufacturer.

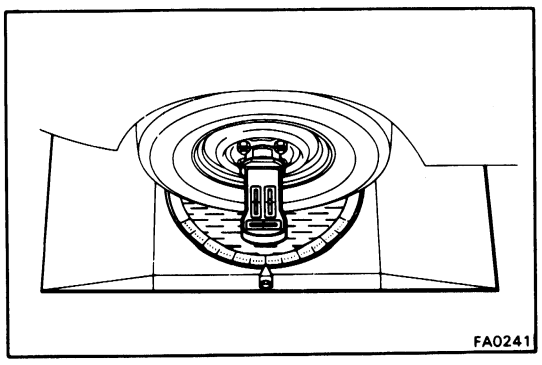

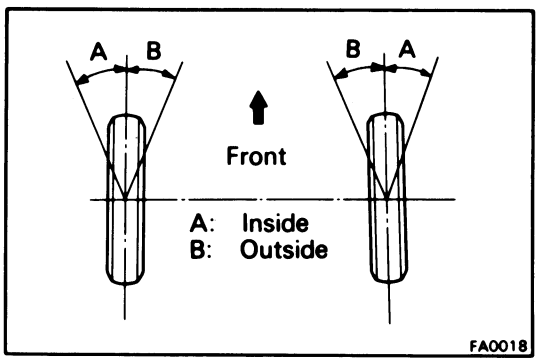

4. ADJUST WHEEL ANGLE

Wheel angle:

Max.		at 20° (Outside wheel)
Inside wheel	Outside wheel	Inside wheel
36°30′ ±1 °	32°00′	21°00′

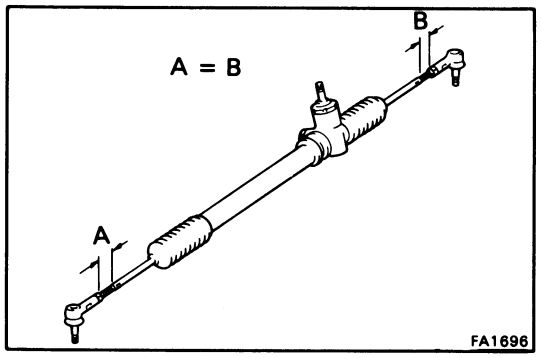

If wheel angles differ from the standard specifications, check to see if the lengths of the left and right tie rods are the same.

NOTE: If the tie rod lengths are not equal, the wheel angle cannot be adjusted properly.

Reinspect the toe-in after adjusting the tie rod lengths.

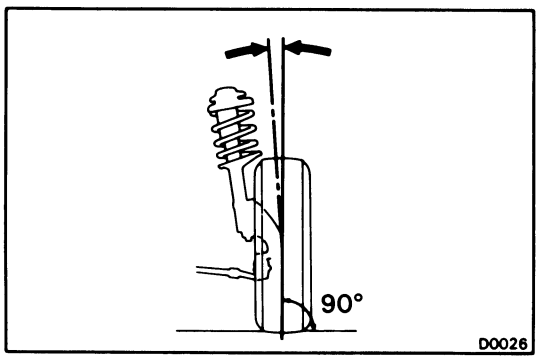

5. ADJUST CAMBER

Camber:

Inspection standard	**0°15′ ± 45′**
Adjustment standard	**0°15′ ± 30′**
Left-right error	**30′ or less**

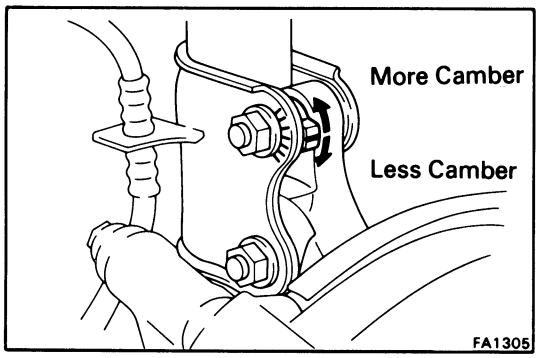

If camber is not within specification, adjust by turning the camber adjusting cam.

(a) Loosen the shock absorber set nut.

(b) Turn the cam to adjust.

NOTE: Camber angle increases about 18′ with each graduation of the cam.

(c) Tighten to the specified torque.

Torque: 1,650 kg-cm (119 ft-lb, 162 N·m)

(d) After installing the wheel, rock the vehicle up and down and recheck the angle.

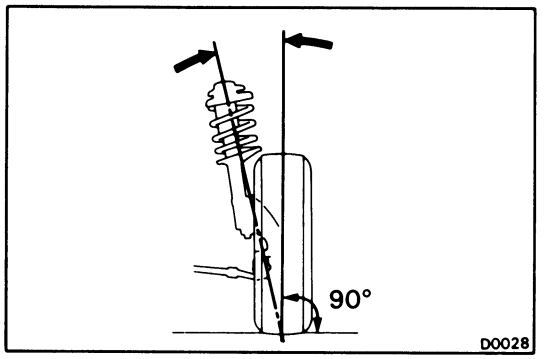

6. INSPECT STEERING AXIS INCLINATION

Steering axis inclination:

Inspection standard	**12°05′ ± 45′**
Left-right error	**30′ or less**

Steering axis inclination is not adjustable. If measurement is not within specification, inspect and replace the suspension parts as necessary.

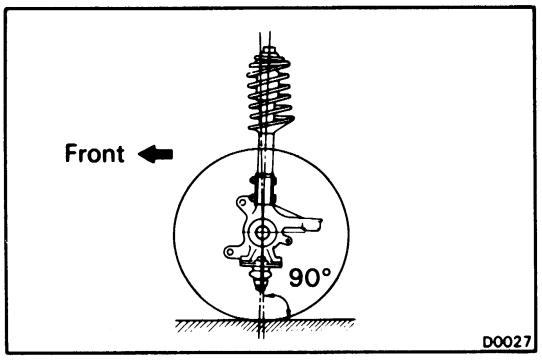

7. ADJUST CASTER

Caster:

Inspection standard	**5°05′ ± 45′**
Adjustment standard	**5°05′ ± 30′**
Left-right error	**30′ or less**

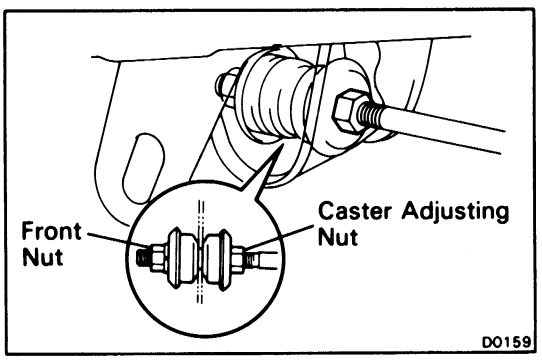

If caster is not within specification, adjust by turning the nut.

(a) Loosen the strut bar front nut.

(b) Turn the camber adjusting nut to adjust.

NOTE: Each revolution of the nut alters the caster angle by 18′.

(c) Tighten the strut bar front nut.

Torque: 1,150 kg-cm (83 ft-lb, 113 N·m)

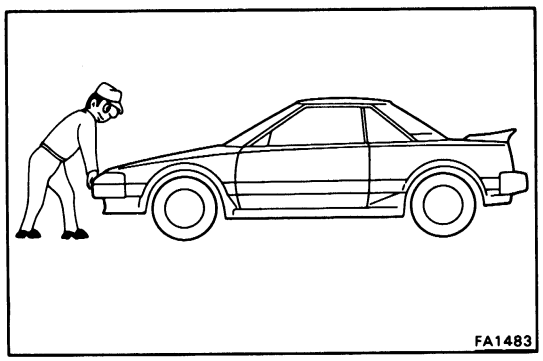

8. ADJUST TOE-IN

Adjust toe-in with a toe-in gauge in the following procedure.

(a) Rock the vehicle up and down to stabilize the suspension.

(b) Move the vehicle forward about 5 m (16.4 ft) with the front wheels in the straight-ahead position on a level place.

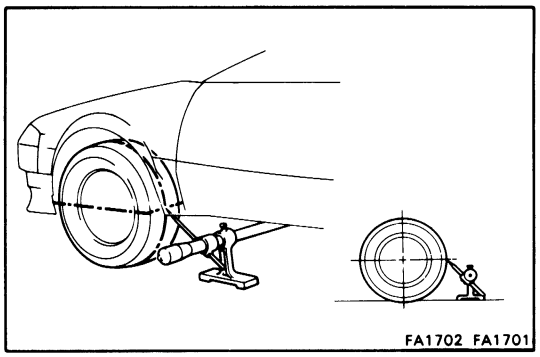

(c) Mark the center of each rear tread and measure the distance between the marks of the right and left tires.

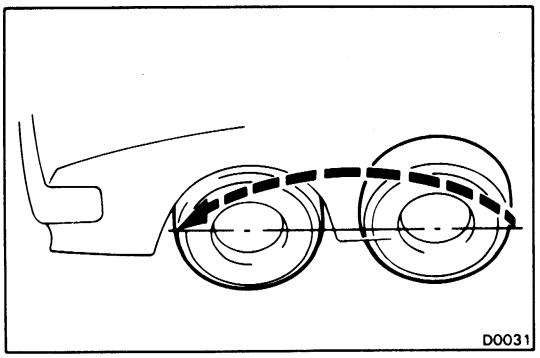

(d) Advance the vehicle until the marks on the rear sides of the tires come to the measuring heights of the gauge on the front side.

NOTE: If the tire rolls too far, repeat from step (b).

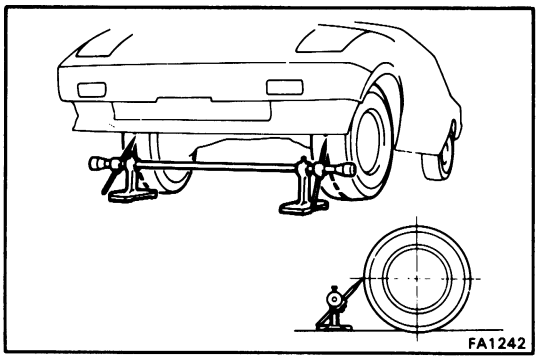

(e) Measure the distance between the marks on the front of the tires.

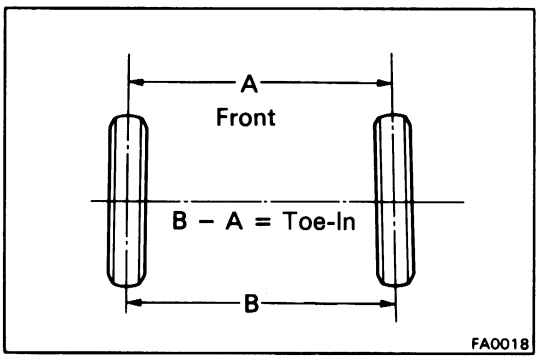

(f) Measure the toe-in.

Toe-in = B – A

Inspection standard: 1 ± 2 mm (0.04 ± 0.08 in.)

If toe-in is not within specification, adjust by left and right tie rod ends.

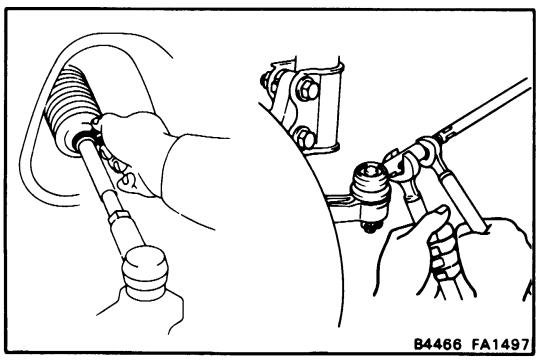

(g) Remove the boot clips and loosen the tie rod lock nuts.

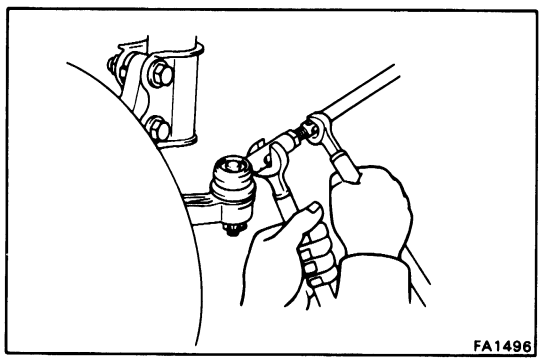

(h) Adjust toe-in by turning the left and right rack ends an equal amount.

Adjustment standard: 1 ± 1 mm (0.04 ± 0.04 in.)

(i) Check that the lengths of the left and right tie rods are the same.

(j) Torque the tie rod lock nuts.

Torque: 480 kg-cm (35 ft-lb, 47 N·m)

(k) Install the boot clips.

NOTE: Check that the boots are not twisted.

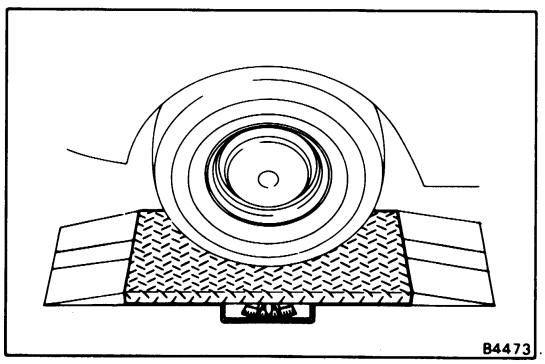

9. INSPECT SIDE SLIP WITH SIDE SLIP TESTER

Side slip: 3.0 mm/m (0.118 in./3.3 ft) or less

If the side slip exceeds the limit, the toe-in or other front wheel alignment may not be correct.

FRONT AXLE HUB

COMPONENTS

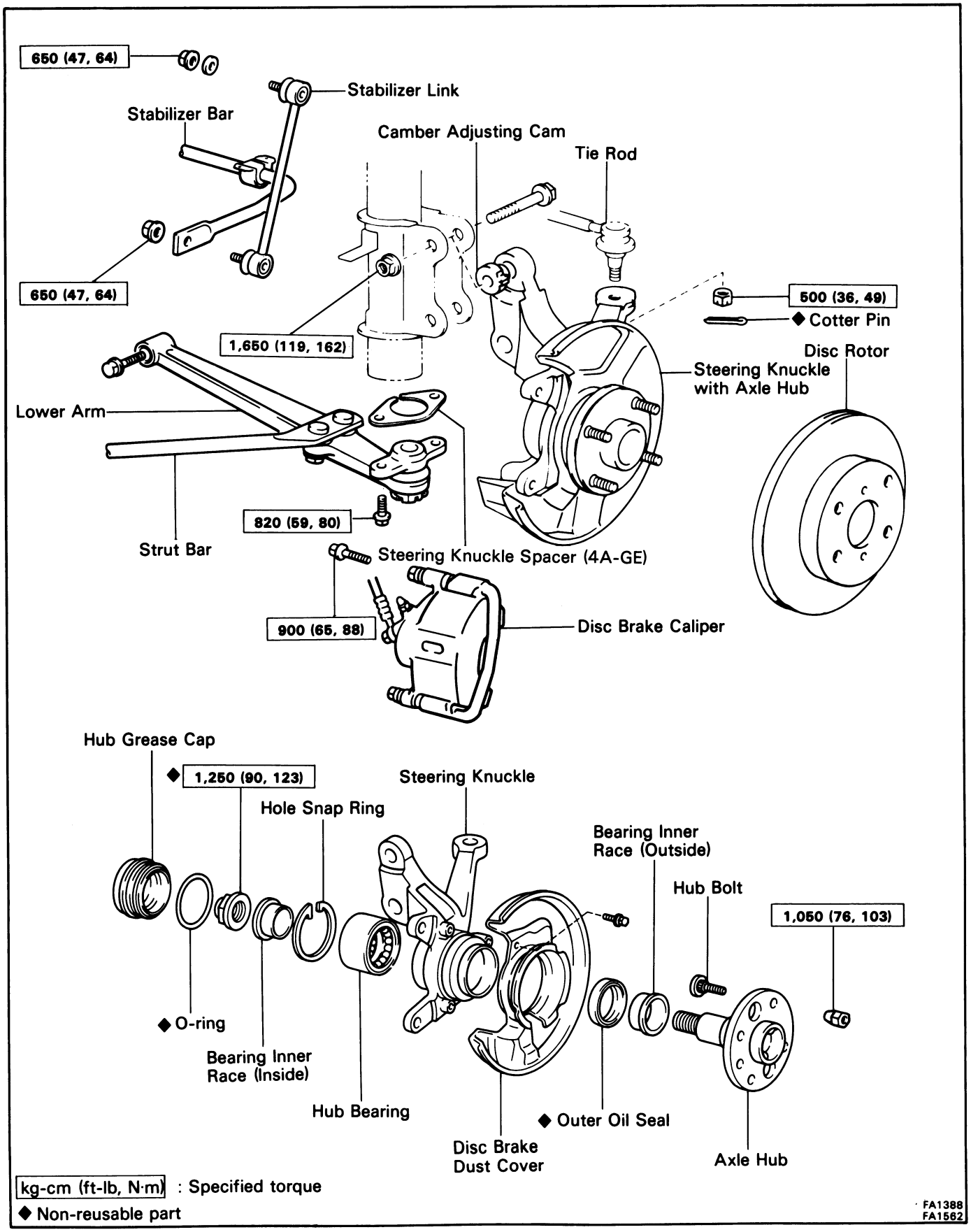

kg-cm (ft-lb, N·m) : Specified torque

◆ Non-reusable part

FA1388
FA1562

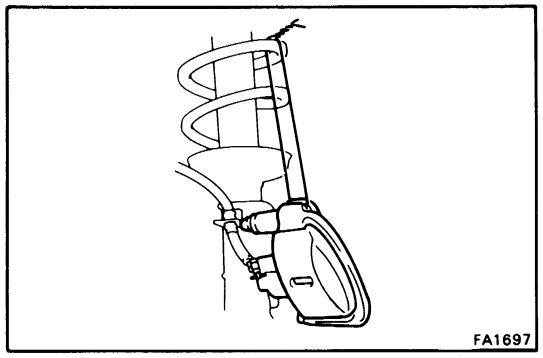

REMOVAL OF FRONT AXLE HUB

(See page FA-7)

1. REMOVE DISC BRAKE CALIPER

Remove the brake caliper from the steering knuckle and suspend it with wire.

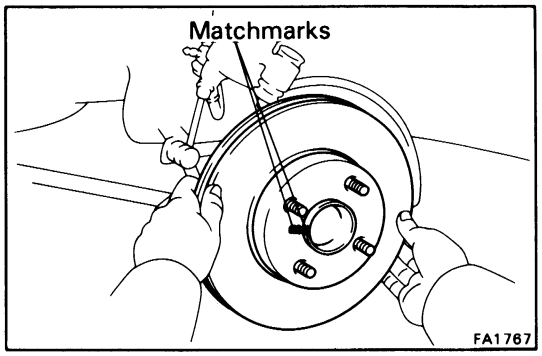

2. REMOVE ROTOR DISC

Place matchmarks on the rotor disc and hub.

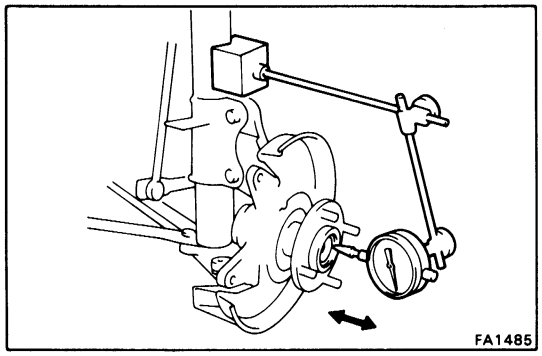

3. CHECK BEARING PLAY IN AXIAL DIRECTION

Bearing play: 0.05 mm (0.0020 in.) or less

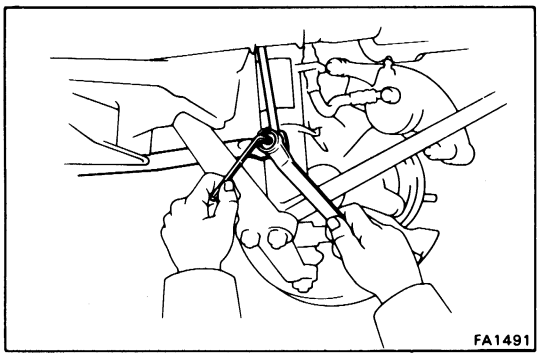

4. DISCONNECT STABILIZER LINK

When disconnecting the stabilizer link, disconnect from the bottom.

NOTE:

- If the ball joint stud turns together with the nut, use a hexagon wrench to hold the stud.
- When disconnecting the tie rod end, to keep from damaging the stabilizer link, disconnect the lower side of the stabilizer link.

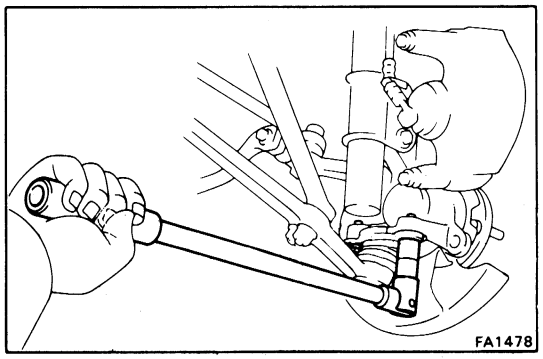

5. DISCONNECT LOWER BALL JOINT AND TIE ROD END

(a) Remove the two bolts holding the ball joint to the steering knuckle.

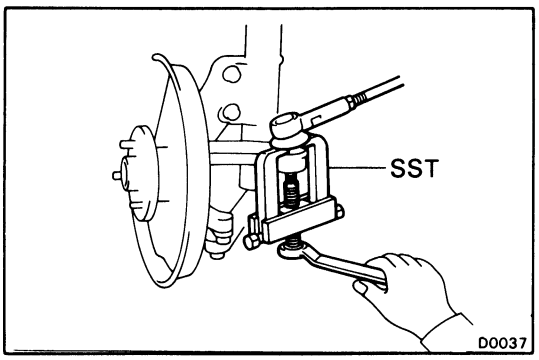

(b) Remove the cotter pin and nut from the tie rod end.

(c) Using SST, disconnect the tie rod end from the steering knuckle.

SST 09628-62011

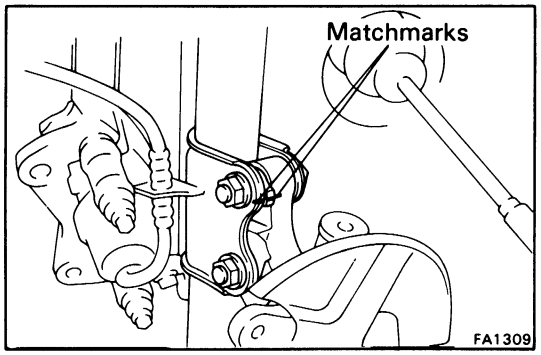

6. DISCONNECT STEERING KNUCKLE FROM SHOCK ABSORBER

(a) Place matchmarks on the shock absorber lower bracket and camber adjusting cam.

(b) Remove the bolts and nuts, and disconnect the steering knuckle and shock absorber.

(c) Remove the steering knuckle spacer.

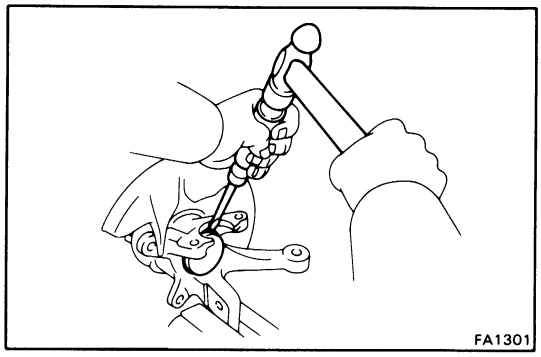

DISASSEMBLY OF FRONT AXLE HUB

(See page FA-7)

1. REMOVE HUB GREASE CAP

(a) Clamp the steering knuckle in a soft jaw vise.

(b) Using a screwdriver and hammer, remove the hub grease cap with O-ring.

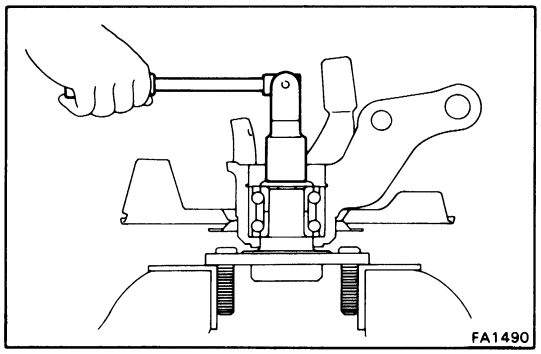

2. REMOVE FRONT AXLE HUB LOCK NUT

(a) Clamp the axle hub in soft jaw vise.

NOTE: Close vise until it securely holds hub bolt. Do not tighten further.

(b) Using a chisel and hammer, loosen the staked part of the nut and remove the lock nut.

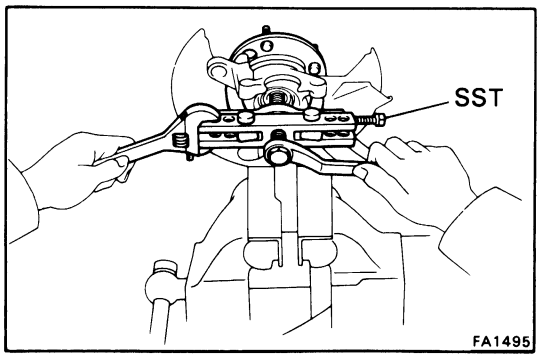

3. REMOVE AXLE HUB

(a) Remove the three bolts holding the disc brake dust cover to the steering knuckle.

(b) Using SST, remove the axle hub from the steering knuckle.

SST 09950-20017

(c) Remove the disc brake dust cover.

4. REMOVE BEARING INNER RACE (INSIDE)

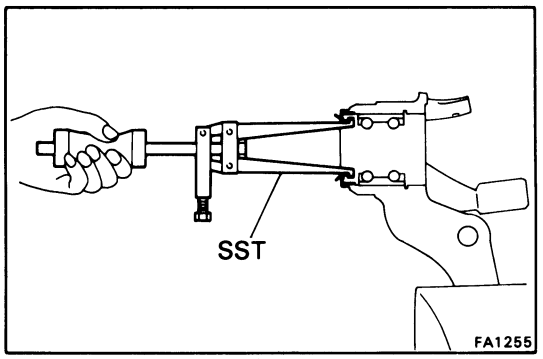

5. REMOVE OUTER OIL SEAL

Using SST, remove the oil seal from steering knuckle.

SST 09308-00010

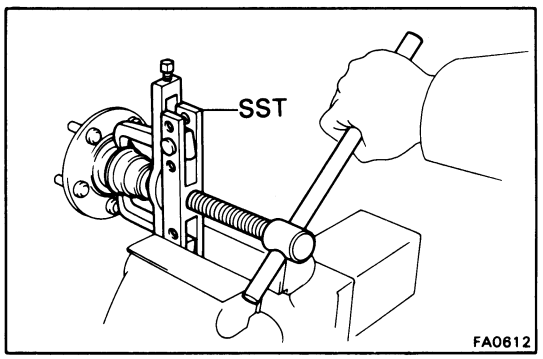

6. REMOVE BEARING INNER RACE (OUTSIDE)

Using SST, remove the hub bearing inner race (outside) from the axle hub.

SST 09950-20017

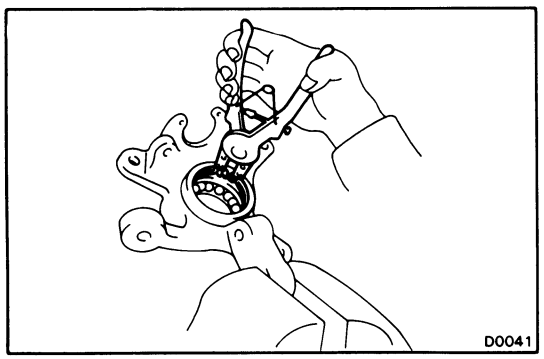

7. REMOVE HOLE SNAP RING

Using snap ring pliers, remove the hole snap ring.

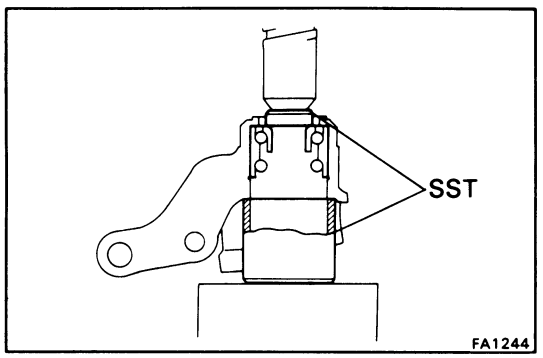

8. REMOVE HUB BEARING

(a) First, place the removed inner race (outside) in the bearing.

(b) Using SST and press, press out the hub bearing from the steering knuckle.

SST 09608-30012 (09608-04060) and 09649-17010

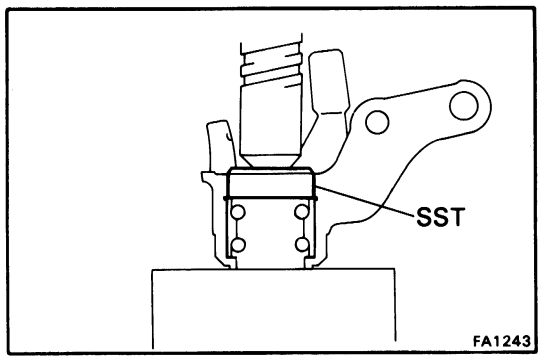

ASSEMBLY OF FRONT AXLE HUB

(See page FA-7)

1. INSTALL HUB BEARING

Using SST and a press, press in a new hub bearing.

SST 09608-30012 (09608-04070)

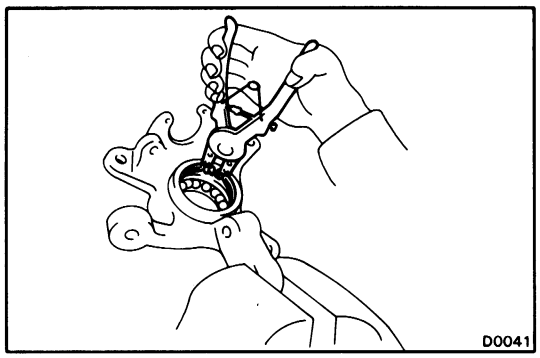

2. INSTALL HOLE SNAP RING

Using snap ring pliers, install the hole snap ring.

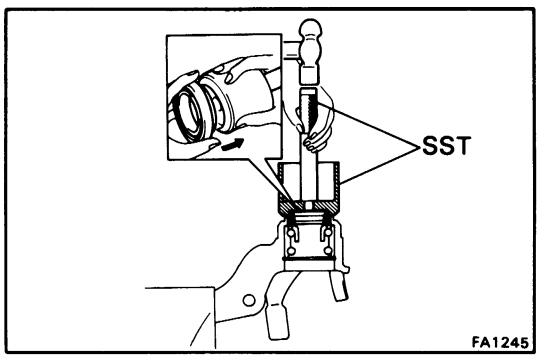

3. INSTALL OUTER OIL SEAL

(a) Place a new bearing inner race (outside) on the hub bearing.

(b) Rotate and insert the lip of a new oil seal into SST.

SST 09649-17010

(c) Using SST and a hammer, tap the oil seal into the steering knuckle.

SST 09608-30012 (09608-04020) and 09649-17010

(d) Apply MP grease to the oil seal lip.

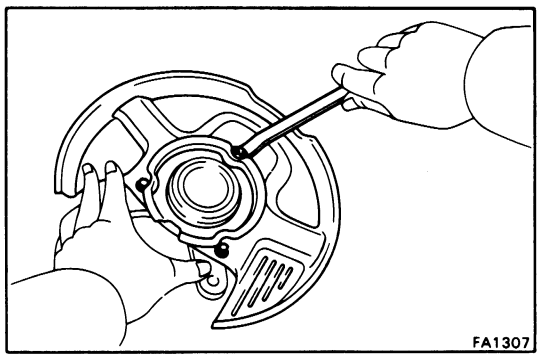

4. INSTALL DISC BRAKE DUST COVER

Install the disc brake dust cover with the three bolt.

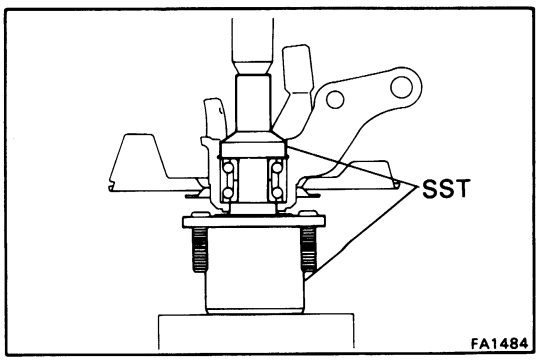

5. INSTALL AXLE HUB

(a) Place a new bearing inner race (inside) on the hub bearing.

(b) Using SST and a press, press the axle hub into the steering knuckle.

SST 09310-35010 and 09649-17010

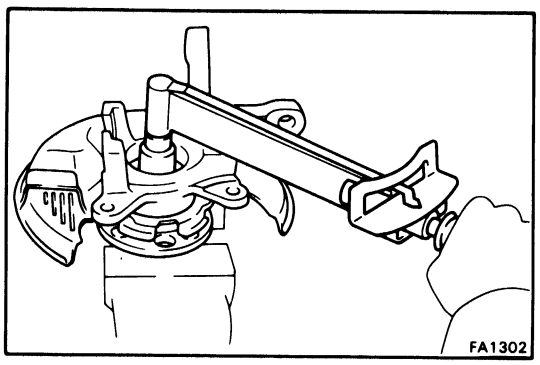

(c) Install and torque the axle hub lock nut.

Torque: 1,250 kg-cm (90 ft-lb, 123 N·m)

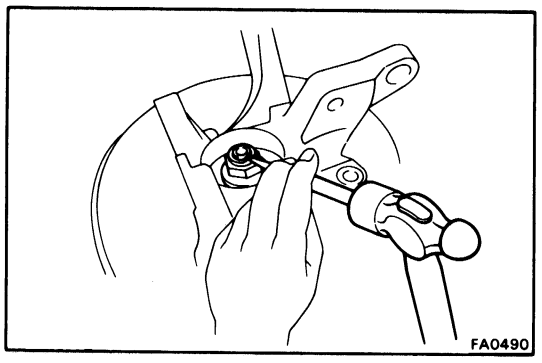

(d) Using a punch and hammer, stake the nut.

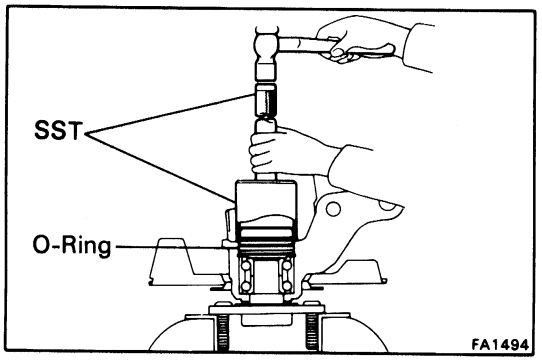

6. INSTALL HUB GREASE CAP

(a) Install a new O-ring onto the hub grease cap.

(b) Using SST and a hammer, tap in the hub grease cap.

SST 09608-30012 (90608-04020) and 09649-17010

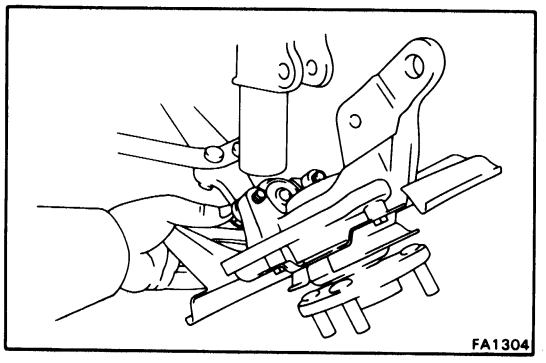

INSTALLATION OF FRONT AXLE HUB

(See page FA-7)

1. INSTALL STEERING KNUCKLE WITH AXLE HUB TO LOWER ARM

(a) Place the steering knuckle spacer on the lower ball joint.

(b) Temporarily install the steering knuckle to the lower arm.

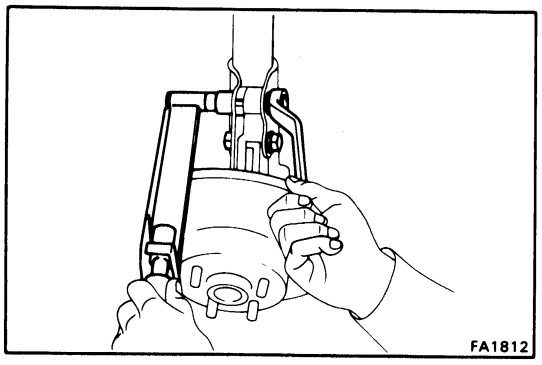

2. INSTALL STEERING KNUCKLE TO SHOCK ABSORBER

(a) Connect the steering knuckle to the shock absorber lower bracket.

(b) Insert the bolts and align the matchmarks of the camber adjusting cam with the shock absorber.

(c) Torque the nuts.

Torque: 1,650 kg-cm (119 ft-lb. 162 N·m)

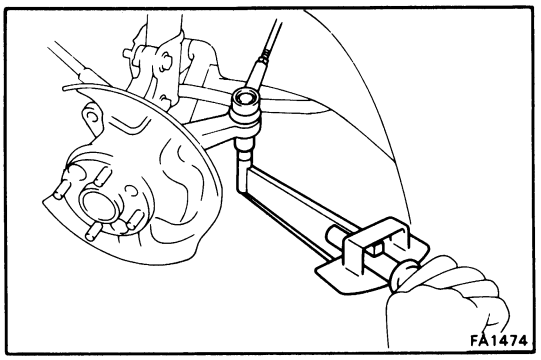

3. CONNECT TIE ROD END TO STEERING KNUCKLE

Torque the castle nut and secure it with a new cotter pin.

Torque: 500 kg-cm (36 ft-lb, 49 N·m)

NOTE: If the cotter pin hole does not line up, correct by tightening the nut by the smallest amount possible.

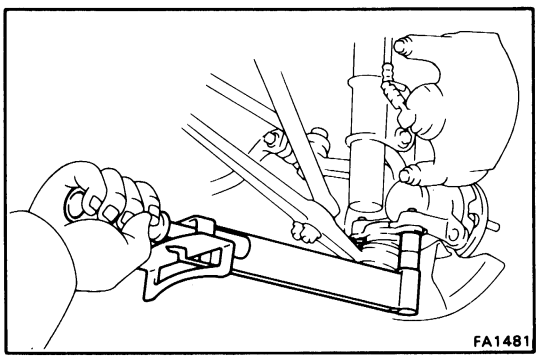

4. TORQUE STEERING KNUCKLE TO BALL JOINT

Torque: 820 kg-cm (59 ft-lb, 80 N·m)

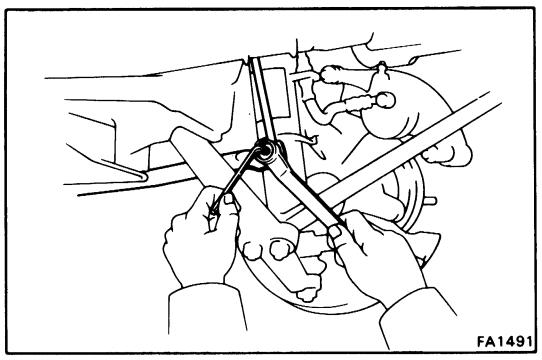

5. CONNECT STABILIZER LINK

Install and torque the nut.

Torque: 650 kg-cm (47 ft-lb, 64 N·m)

NOTE: If the ball joint stud turns together with the nut, use a hexagon wrench to hold the stud.

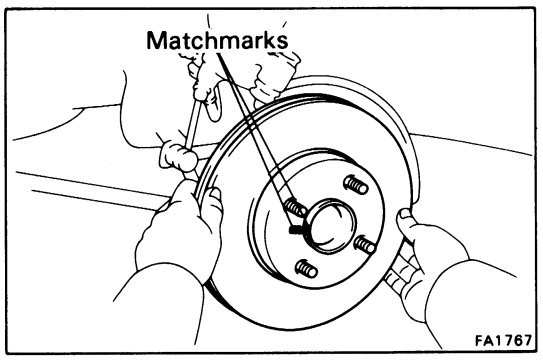

6. INSTALL ROTER DISC TO AXLE HUB

Align the matchmarks and install the rotor disc.

NOTE: If there is no matchmarks, temporarily install the rotor disc and measure the rotor disc runout and install the rotor disc in best position. (See step 3 on page BR-23)

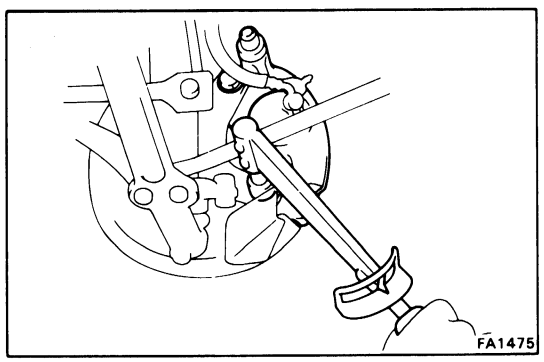

7. INSTALL DISC BRAKE CALIPER TO STEERING KNUCKLE

Torque the two bolts.

Torque: 900 kg-cm (65 ft-lb, 88 N·m)

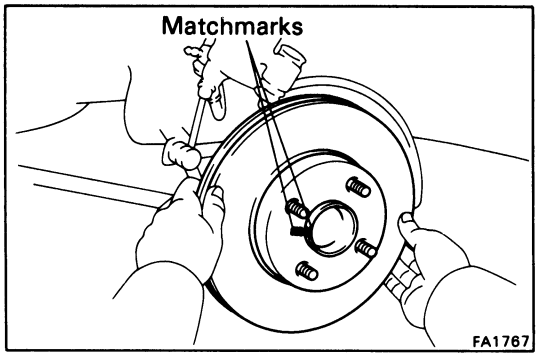

REPLACEMENT OF FRONT AXLE HUB BOLT

1. REMOVE BRAKE CALIPER

Remove the brake caliper from the steering knuckle and suspend it with a wire.

2. REMOVE ROTOR DISC

Place matchmarks on the rotor disc and hub.

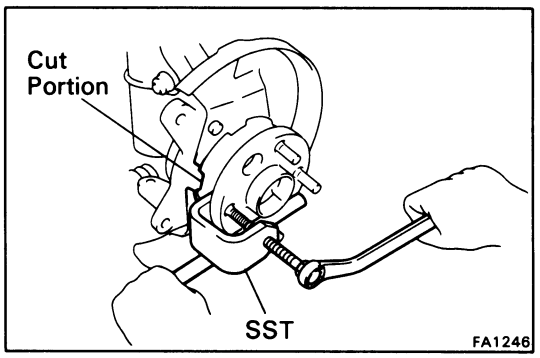

3. REMOVE FRONT AXLE HUB BOLT

(a) Align the disc brake dust cover cut portion and axle hub bolt.

(b) Using SST, remove the axle hub bolt.

SST 09650-17011

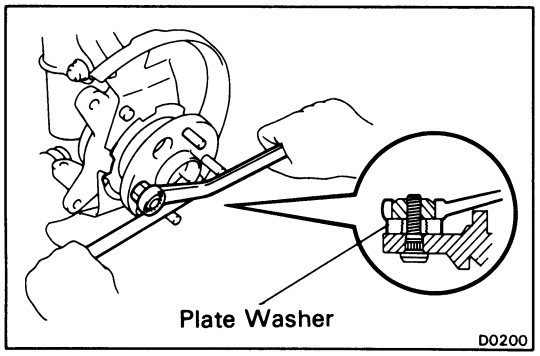

4. INSTALL FRONT AXLE HUB BOLT

Hold the front axle hub, and install a new hub bolt.

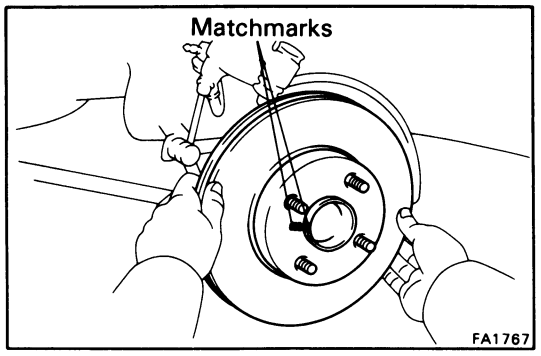

5. INSTALL ROTOR DISC

Align the matchmarks and install the rotor disc.

NOTE: If there is no matchmarks, temporarily install the rotor disc and measure the rotor disc runout and install the rotor disc in best position. (See step 3 on page BR-23)

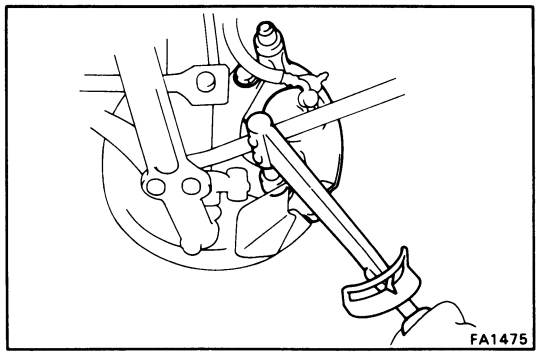

6. INSTALL DISC BRAKE CALIPER TO STEERING KNUCKLE

Torque: 900 kg-cm (65 ft-lb, 88 N·m)

FRONT SHOCK ABSORBER

COMPONENTS

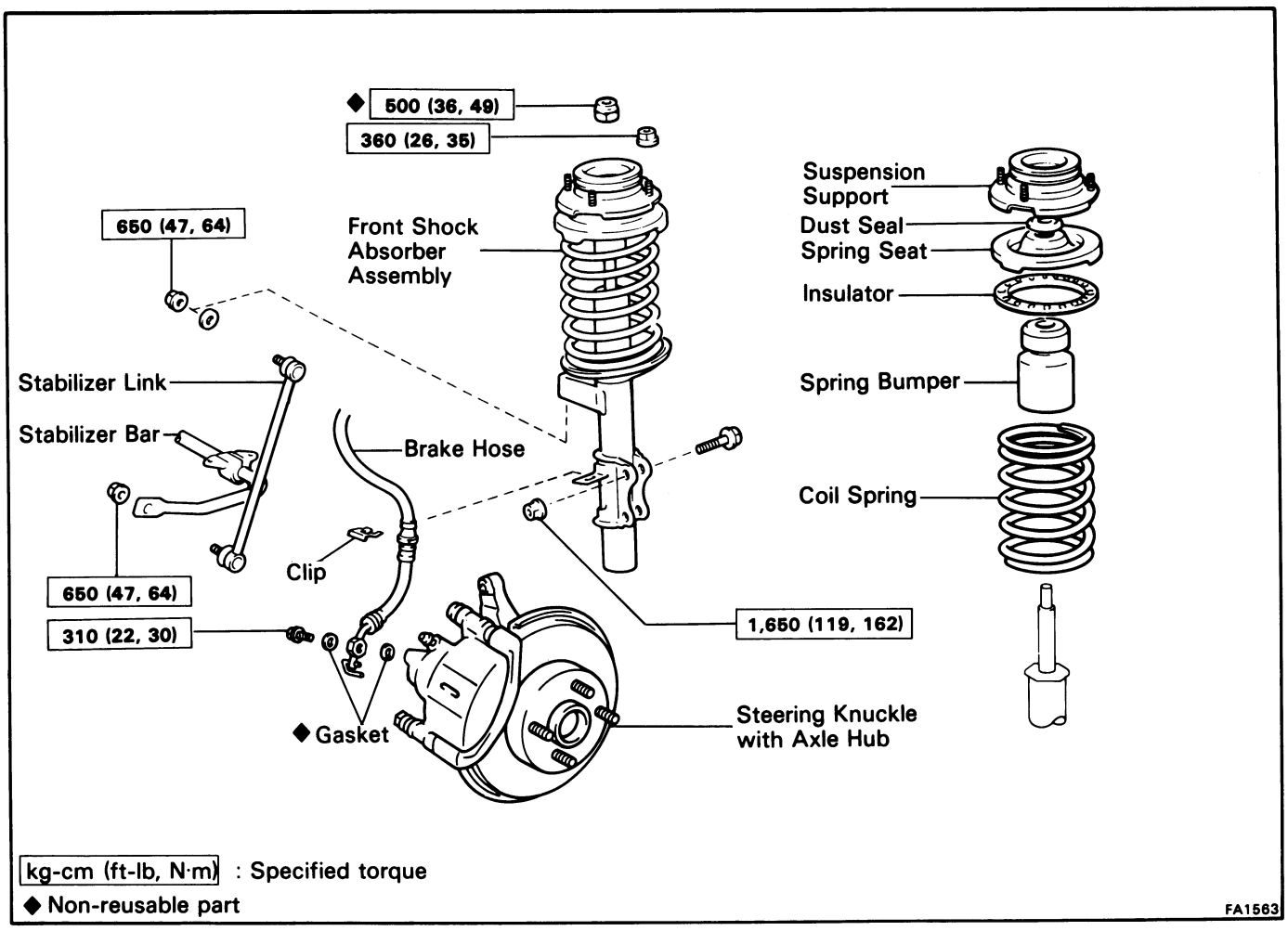

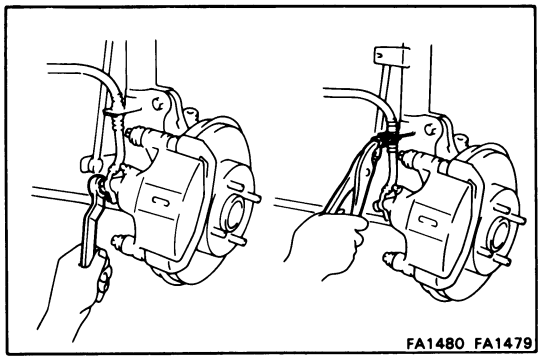

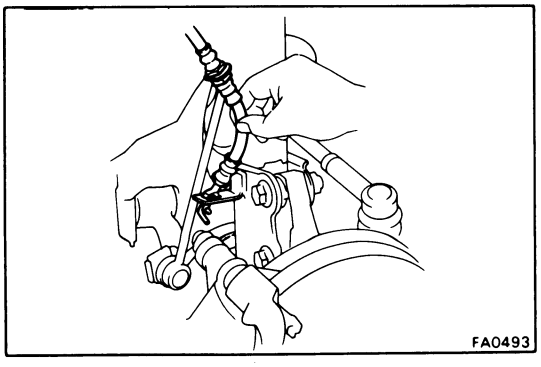

REMOVAL OF FRONT SHOCK ABSORBER ASSEMBLY

1. DISCONNECT BRAKE HOSE

(a) Remove the union bolt and disconnect the brake hose from the disc brake caliper.

(b) Drain the brake fluid into a container.

(c) Remove the clip from the shock absorber assembly.

(d) Pull off the brake hose from the shock absorber.

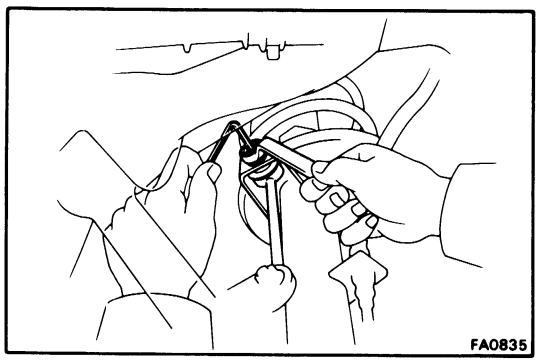

2. DISCONNECT STABILIZER LINK

Disconnect the stabilizer link from the shock absorber assembly.

NOTE: If the ball joint stud turns together with the nut, use a hexagon wrench to hold the stud.

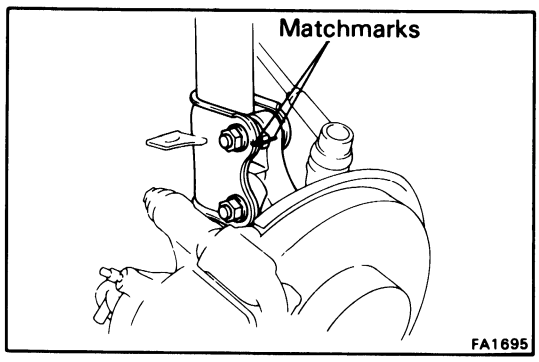

3. DISCONNECT STEERING KNUCKLE FROM SHOCK ABSORBER

(a) Place matchmarks on the shock absorber lower bracket and camber adjusting cam.

(b) Remove the nuts and bolts and disconnect the steering knuckle and shock absorber.

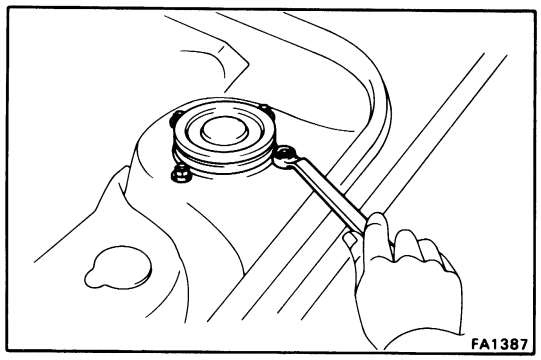

4. REMOVE SHOCK ABSORBER FROM BODY

(a) Remove the four nuts holding top of the suspension support.

(b) Remove the shock absorber from the body.

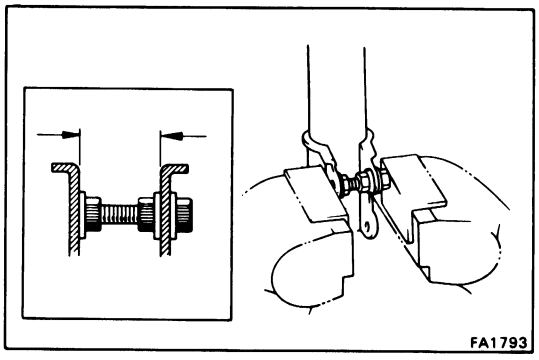

5. CLAMP SHOCK ABSORBER IN VISE

Install a bolt and two nuts to the bracket at the lower portion of the shock absorber shell and secure it in a vise.

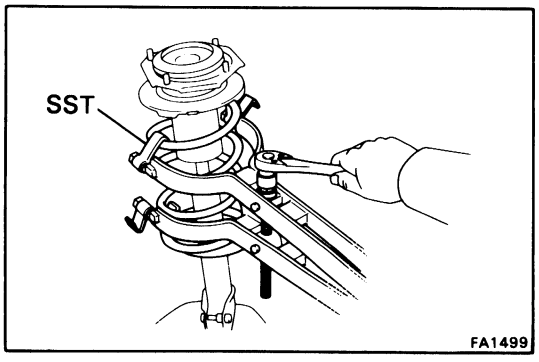

6. REMOVE COIL SPRING

(a) Using SST, compress the coil spring.

SST 09727-22032 or 09727-30020

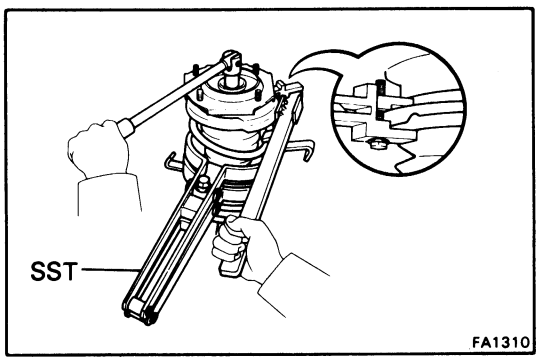

(b) Using SST, hold the spring seat so that it will not turn, and remove the nut.

SST 09729-22031

(c) Remove the suspension support, spring seat, spring, insulator and bumper.

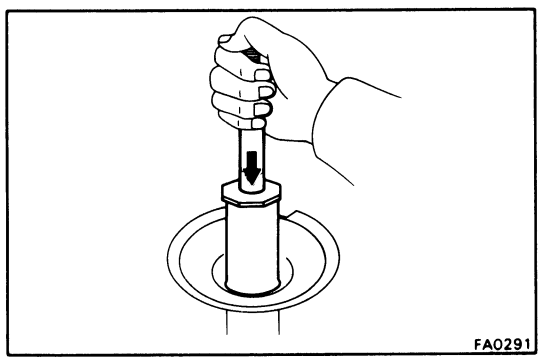

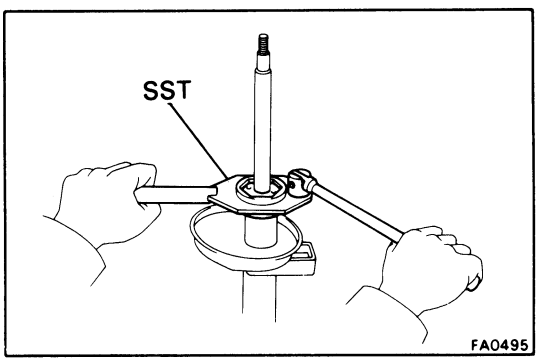

INSPECTION OF FRONT SHOCK ABSORBER ASSEMBLY

INSPECT OPERATION OF SHOCK ABSORBER

(a) While pushing the piston rod, check that the pull throughout the stroke is even, and there is no abnormal resistance or noise.

(b) Push the piston rod in fully and release it.
Check that it returns at a constant speed throughout.

If the absorber operation is not as specified, replace the absorber, as an assembly.

CAUTION: Before discarding the shock absorber, first loosen the ring nut 2 or 3 turns with SST completely to release the gas.

SST 09720-00011 (09721-00071)

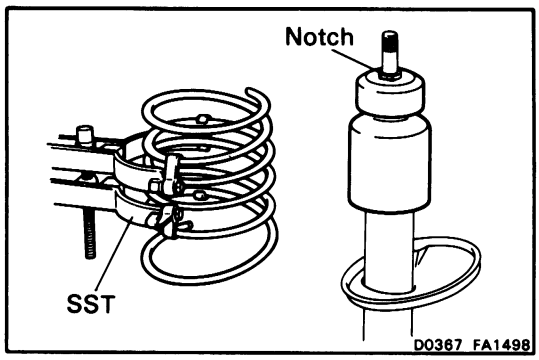

INSTALLATION OF FRONT SHOCK ABSORBER ASSEMBLY

(See page FA-15)

1. INSTALL BUMPER, COIL SPRING, INSULATOR SPRING SEAT AND DUST SEAL

(a) Install the bumper to the piston rod.

(b) Using SST, compress the coil spring.

SST 09727-22032 or 09727-30020

(c) Align the coil spring end with the lower seat hollow and install.

(d) Install the insulator.

(e) Face the out mark of the spring seat toward the outside of the vehicle and align the piston rod notch and spring seat notch.

(f) Install the dust seal on the spring seat.

(g) Install the suspension support.

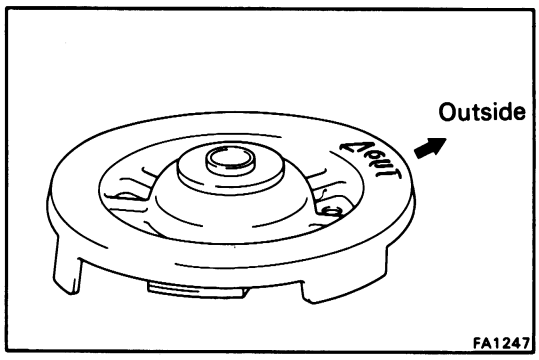

(h) Using SST, install and torque a new suspension support nut.

SST 09729-22031

Torque: 500 kg-cm (36 ft-lb, 49 N·m)

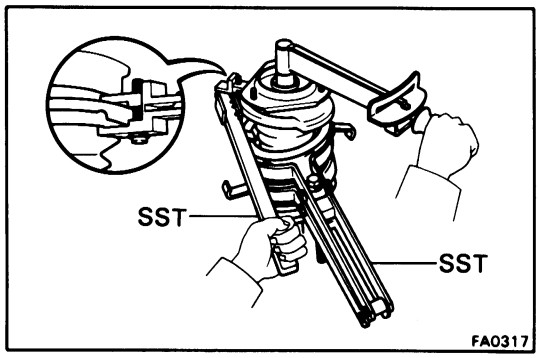

2. INSTALL SHOCK ABSORBER ASSEMBLY TO BODY

Install the four nuts holding the shock absorber to the body. Torque the nuts.

Torque: 360 kg-cm (26 ft-lb, 35 N·m)

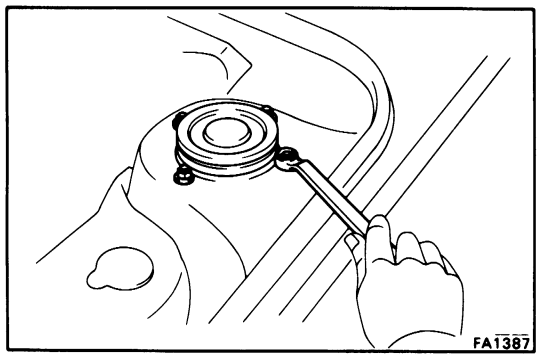

3. INSTALL SHOCK ABSORBER TO STEERING KNUCKLE

(a) Install the camber adjusting cam onto the steering knuckle.

(b) Jack up the lower arm and align the bolt holes.

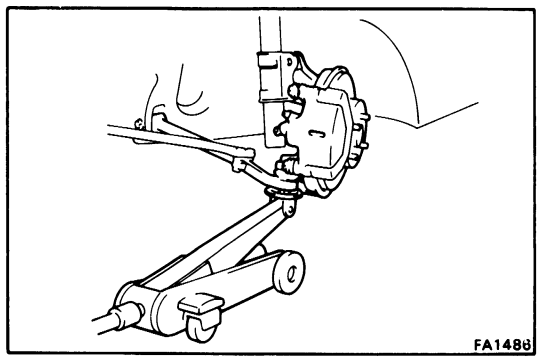

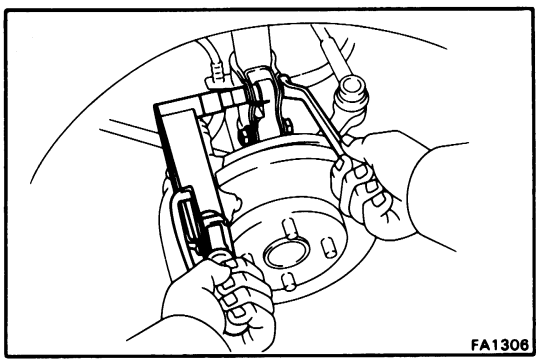

(c) Insert the bolts and align the matchmarks of the camber adjusting cam with the shock absorber.

(d) Install and torque the nuts.

Torque: 1,650 kg-cm (119 ft-lb, 162 N·m)

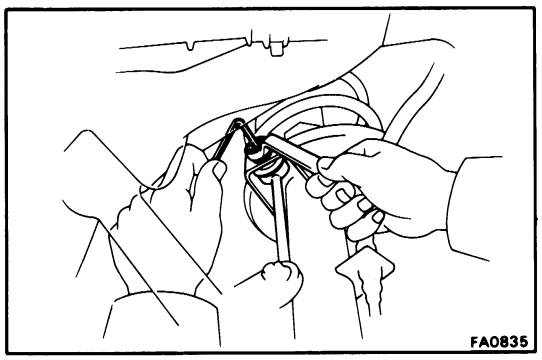

4. CONNECT STABILIZER LINK

Connect the stabilizer link to the shock absorber assembly.

Torque: 650 kg-cm (47 ft-lb, 64 N·m)

NOTE: If the ball joint stud turns together with the nut, use a hexagon wrench to hold the stud.

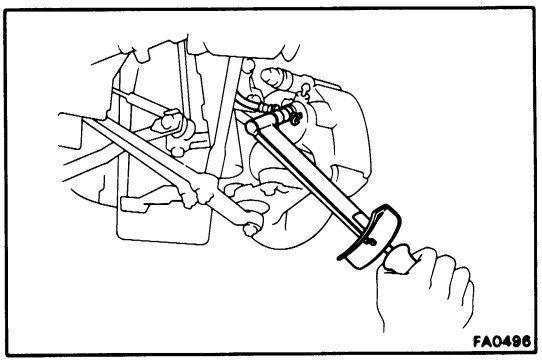

5. CONNECT FLEXIBLE HOSE

(a) Run the flexible hose through the shock absorber.

(b) Connect the flexible hose to the disc brake caliper with the union bolt and new gaskets. Torque the union bolt.

Torque: 310 kg-cm (22 ft-lb, 30 N·m)

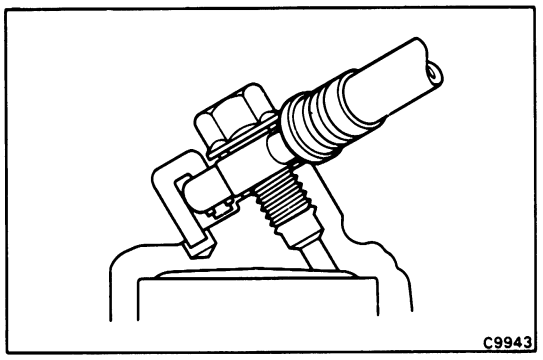

NOTE: When connecting the flexible hose to the caliper, connect so the peg aligns with the hole.

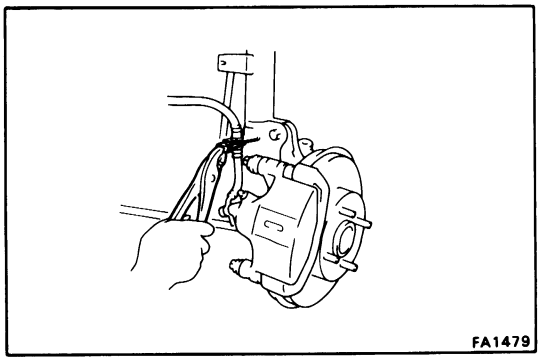

6. INSTALL CLIP

7. BLEED BRAKE LINE (See page BR-6)

8. INSPECT CAMBER (See page FA-3)

FRONT SUSPENSION

COMPONENTS

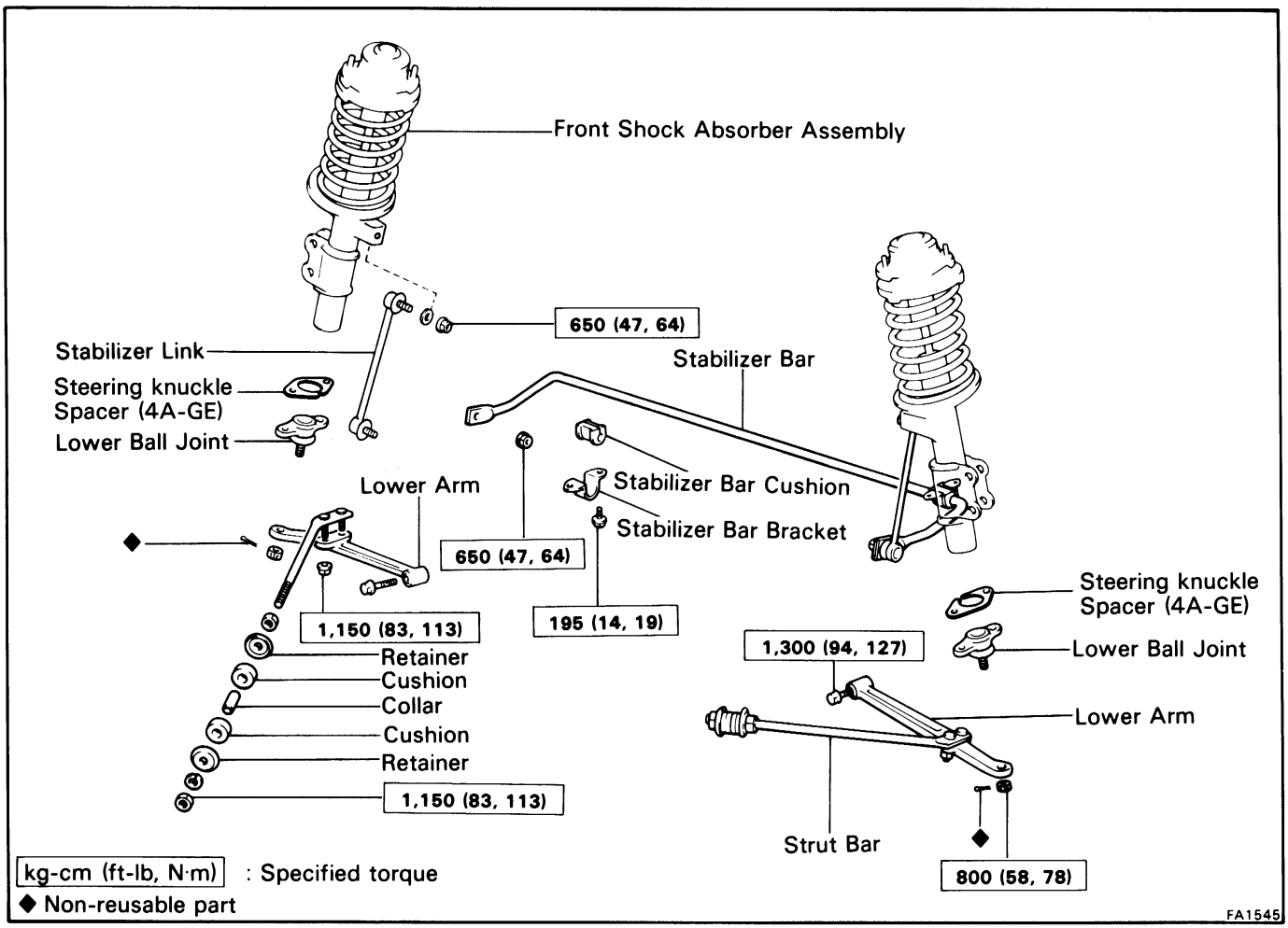

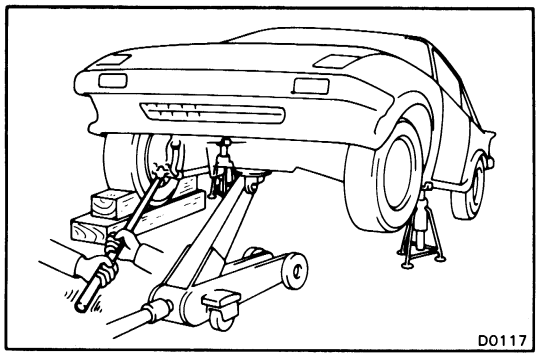

Ball Joint

INSPECTION OF BALL JOINT

1. INSPECT BALL JOINT FOR EXCESSIVE LOOSENESS

(a) Jack up the front of the vehicle and place a wooden block with a height of 180 – 200 mm (7.09 – 7.87 in.) under one front tire.

(b) Lower the jack until there is about half a load on the front coil spring. Place stands under the vehicle for safety.

(c) Make sure the front wheels are in a straight forward position and block the wheel with chocks.

(d) Move the lower arm up and down and check that the ball joint has no play.

Ball joint vertical play: 0 mm (0 in.)

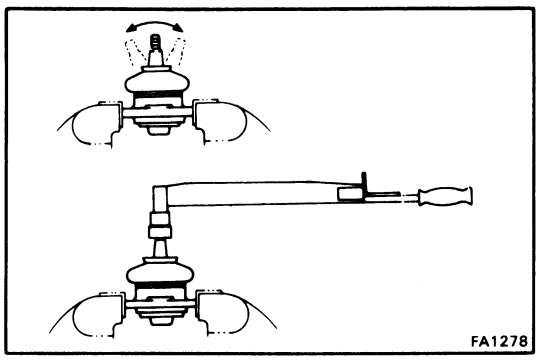

2. INSPECT BALL JOINT FOR ROTATION

(a) Remove the ball joint.

(b) Flip the ball joint stud back and forth 5 times as shown in the figure, before installing the nut.

(c) Using a torque gauge, turn the nut continuously one every 2 – 4 seconds and take the torque reading on the fifth turn.

Torque (turning): 8 – 25 kg-cm (7 – 21 in.-lb, 0.8 – 2.4 N·m)

If not within specification, replace the ball joint.

(d) Install the ball joint.

Lower Arm

(See page FA-20)

REMOVAL OF LOWER ARM

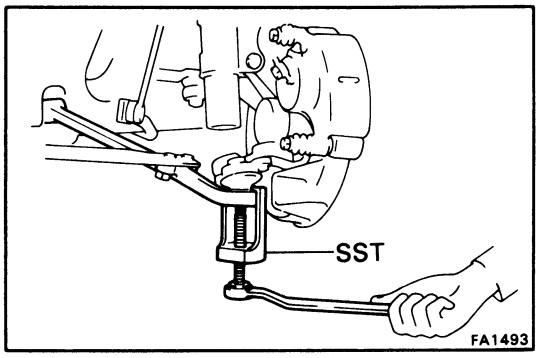

1. DISCONNECT LOWER ARM FROM BALL JOINT

(a) Remove the cotter pin and castle nut.

(b) Using SST, disconnect the lower arm from the ball joint.

SST 09610-20012

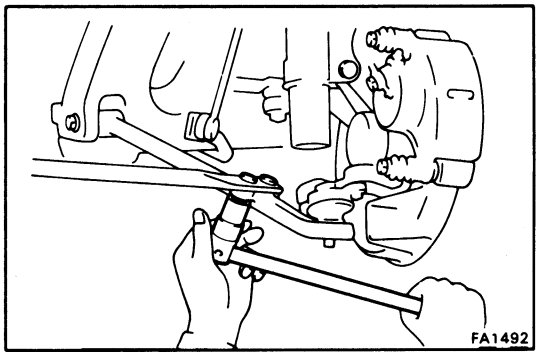

2. DISCONNECT STRUT BAR FROM LOWER ARM

Remove the two nuts and disconnect the strut bar from the lower arm.

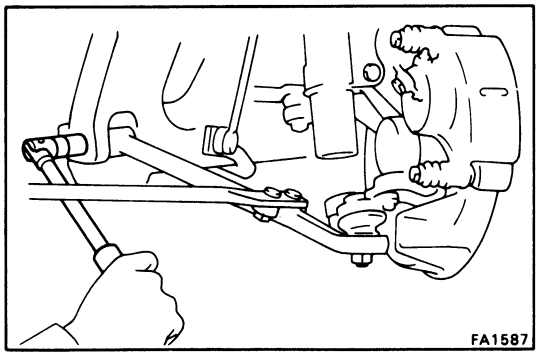

3. REMOVE LOWER ARM

Remove the bolt and lower arm from the body.

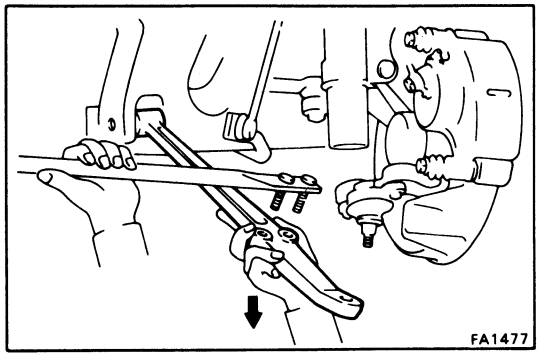

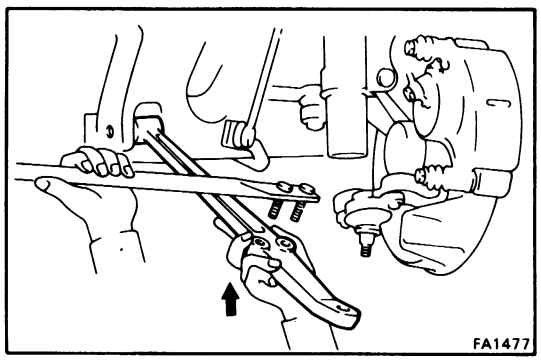

INSTALLATION OF LOWER ARM

1. INSTALL LOWER ARM

(a) Temporarily install the strut bar to the lower arm with the nuts.

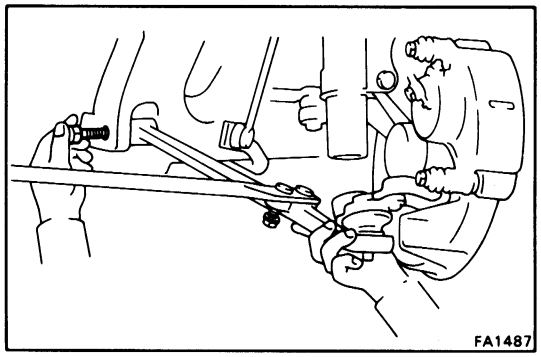

(b) Temporarily install the lower arm to the body with the bolt.

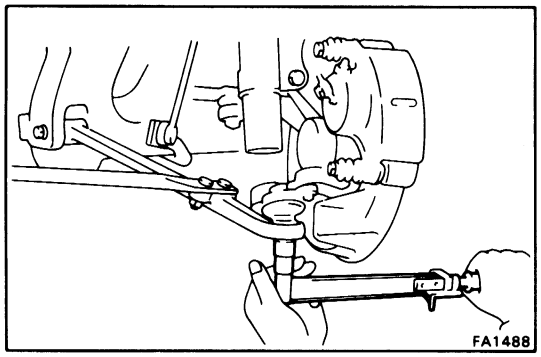

2. CONNECT LOWER ARM TO BALL JOINT

(a) Connect the lower arm to the ball joint and torque the castle nut.

Torque: 800 kg-cm (58 ft-lb, 78 N·m)

(b) Install a new cotter pin.

NOTE: If the cotter pin hole does not line up, correct by tightening the nut by the smallest amount possible.

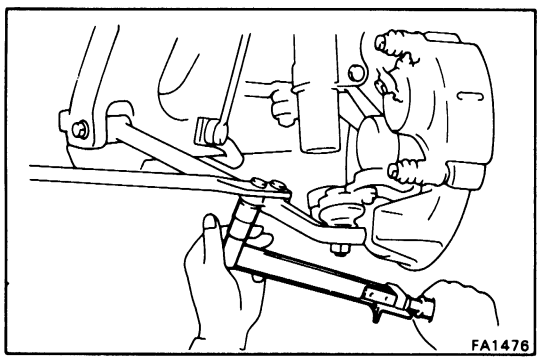

3. TORQUE STRUT BAR TO LOWER ARM

Torque: 1,150 kg-cm (83 ft-lb, 113 N·m)

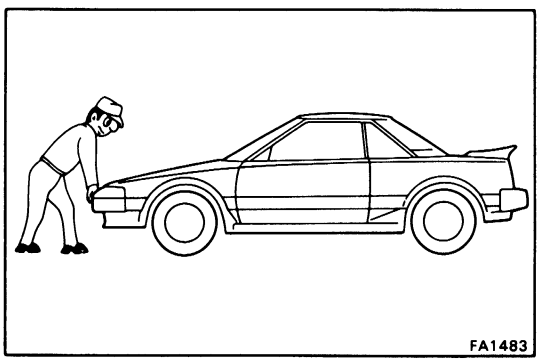

4. TORQUE LOWER ARM TO BODY

(a) Install the wheel and lower the vehicle.
Then rock the vehicle up and down to stabilize the suspension.

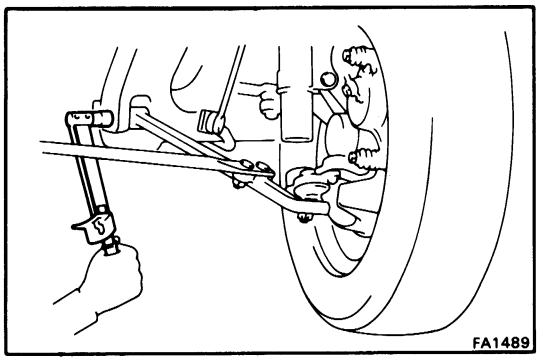

(b) Torque the bolt.

Torque: 1,300 kg-cm (94 ft-lb, 127 N·m)

5. INSPECT FRONT WHEEL ALIGNMENT
(See page FA-3)

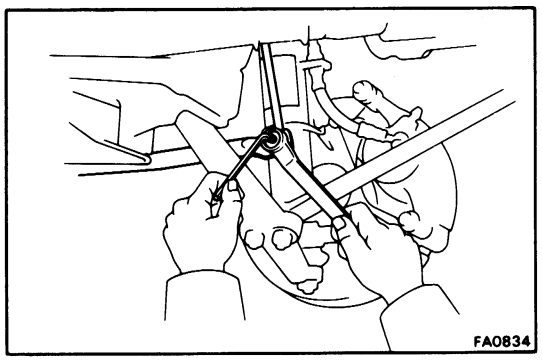

Stabilizer Bar and Link

(See page FA-20)

REMOVAL OF STABILIZER BAR AND LINK

1. DISCONNECT STABILIZER LINK FROM STABILIZER BAR

Remove the nut and disconnect the stabilizer link from stabilizer bar.

NOTE: If the ball joint stud turns together with the nut, use a hexagon wrench to hold the stud.

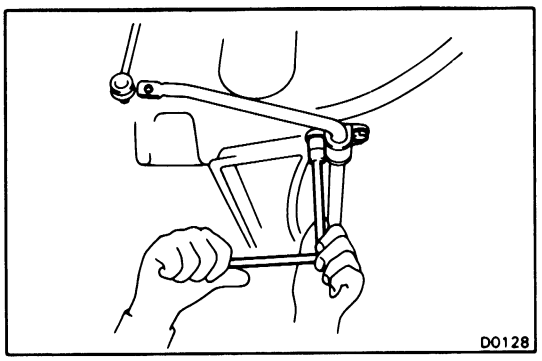

2. REMOVE STABILIZER BAR FROM BODY

Remove the bolts and stabilizer with brackets.

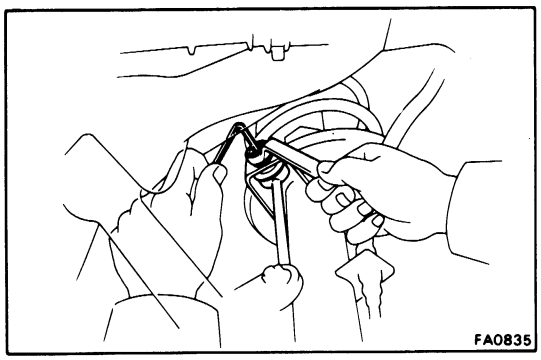

3. REMOVE STABILIZER LINK FROM FRONT SHOCK ABSORBER ASSEMBLY

Remove the nut and stabilizer link.

4. REMOVE STABILIZER BRACKET AND STABILIZER BAR CUSHION

NOTE: If the ball joint stud turns together with the nut, use a hexagon wrench to hold the stud.

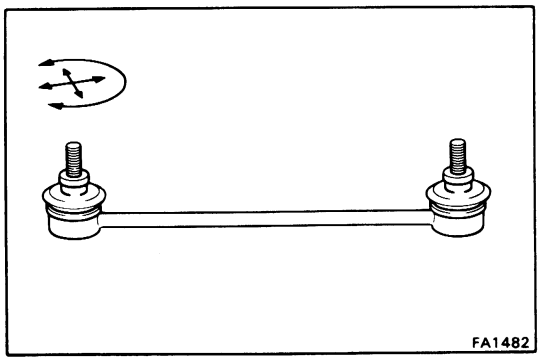

INSPECTION OF STABILIZER LINK

INSPECT STABILIZER LINK

Rotate ball joint arm in all directions.

If the movement is not smooth and free, replace the stabilizer link.

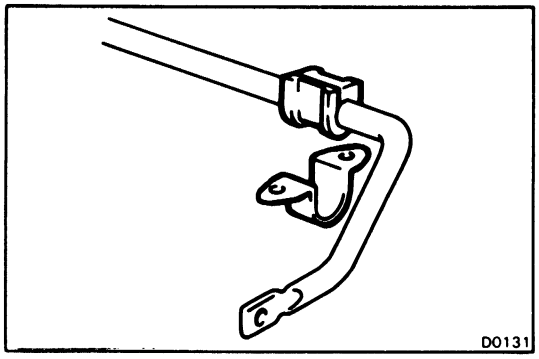

INSTALLATION OF STABILIZER BAR AND LINK

1. **INSTALL STABILIZER BAR CUSHION AND STABILIZER BRACKETS**

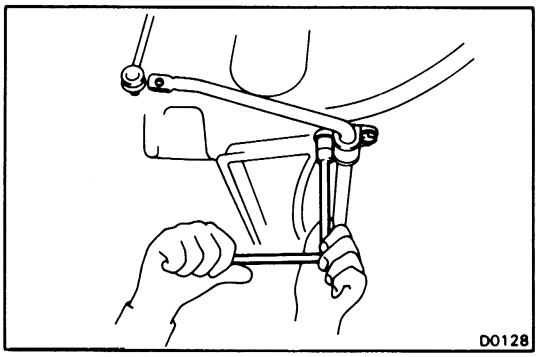

2. **INSTALL STABILIZER BAR TO BODY**

   Torque: 195 kg-cm (14 ft-lb, 19 N·m)

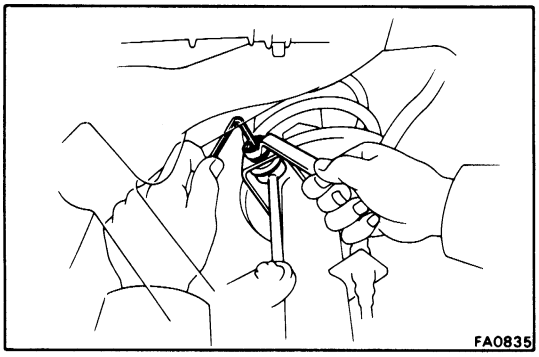

3. **INSTALL STABILIZER LINK TO FRONT SHOCK ABSORBER ASSEMBLY**

   Torque: 650 kg-cm (47 ft-lb, 64 N·m)

   NOTE: If the ball joint stud turns together with the nut, use a hexagon wrench to hold the stud.

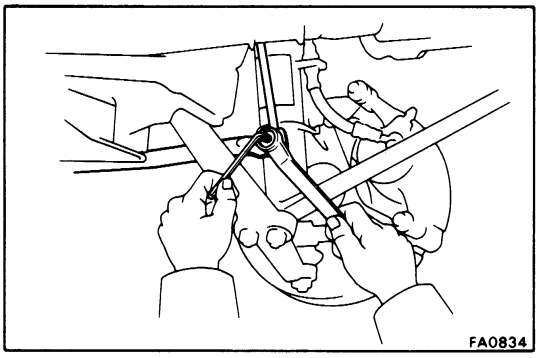

4. **CONNECT STABILIZER LINK TO STABILIZER BAR**

   Torque: 650 kg-cm (47 ft-lb, 64 N·m)

   NOTE: If the ball joint stud turns together with the nut, use a hexagon wrench to hold the stud.

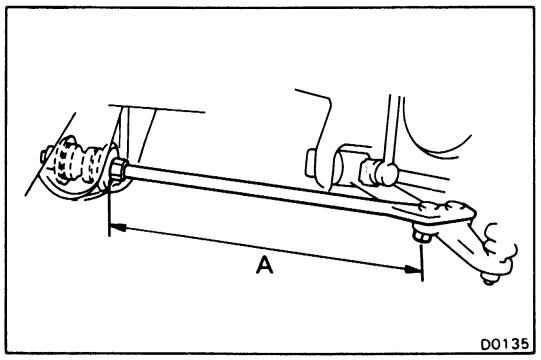

Strut Bar

(See page FA-20)

REMOVAL OF STRUT BAR

1. MEASURE LENGTH "A"

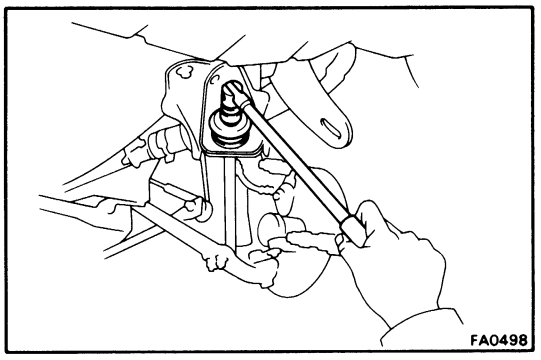

2. REMOVE STRUT BAR

(a) Remove the nut, front retainer and cushion.

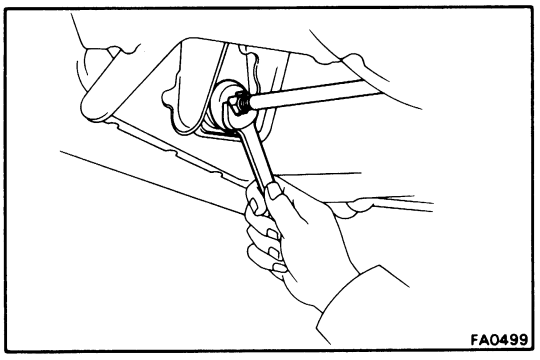

(b) Loosen the nut.

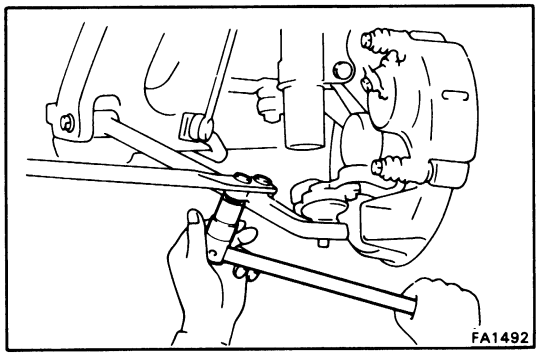

(c) Disconnect the strut bar from the lower arm, and remove the lower arm from the body.

(d) Remove the collar, cushion retainer and nut from the strut bar.

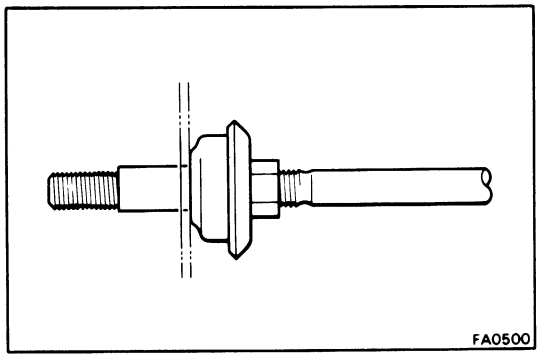

INSTALLATION OF STRUT BAR

1. INSTALL STRUT BAR

(a) Install the nut, retainer, cushion and collar to the strut bar.

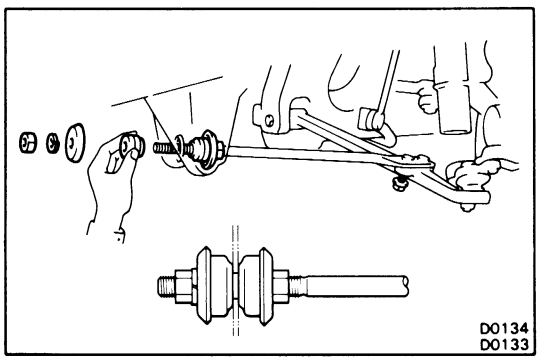

(b) Install the strut bar to the body, and connect to the lower arm.

(c) Install the cushion, retainer and nut.

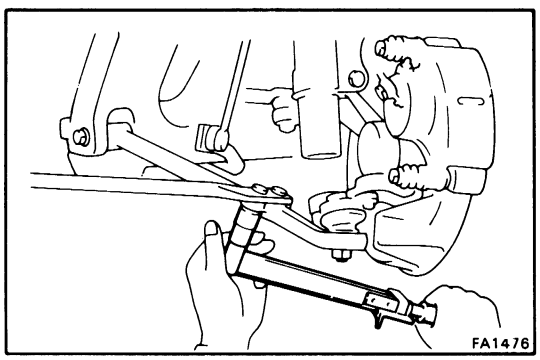

2. TORQUE LOWER ARM TO STRUT BAR

Torque: 1,150 kg-cm (83 ft-lb, 113 N·m)

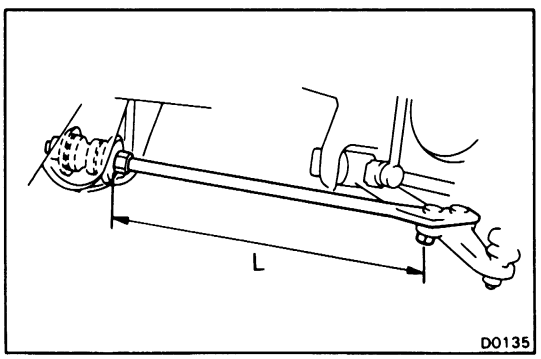

3. ADJUST STRUT BAR LENGTH

Turn the nut and adjust to the previous length.
(See page FA-25)

NOTE: The length of "L" in figure should be approximately 362 – 363 mm (14.25 – 14.29 in.)

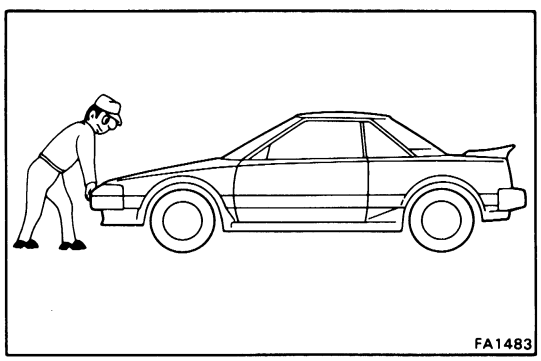

4. TORQUE STRUT BAR TO BODY

(a) Install the wheel and lower the vehicle.
Then rock the vehicle up and down to stabilize the suspension.

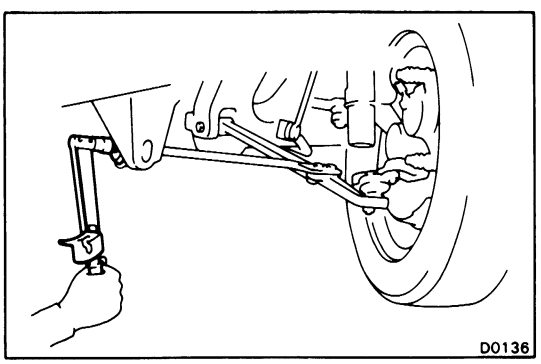

(b) Torque the nut.

Torque: 1,150 kg-cm (83 ft-lb, 113 N·m)

5. INSPECT FRONT WHEEL ALIGNMENT
(See page FA-3)

REAR AXLE AND SUSPENSION

	Page
TROUBLESHOOTING	RA-2
REAR WHEEL ALIGNMENT	RA-3
REAR AXLE HUB AND CARRIER	RA-6
REAR DRIVE SHAFT	RA-14
REAR SUSPENSION	RA-35
Rear Shock Absorber	RA-36
Ball Joint	RA-40
Lower Arm	RA-41
Strut Rod	RA-43
Suspension Arm	RA-44
Stabilizer Bar and Link	RA-46

TROUBLESHOOTING

Problem	Possible cause	Remedy	Page
Wanders/pulls	Tires worn or improperly inflated	Inflate tires to proper pressure or replace tires	RA-3
	Alignment incorrect	Check rear alignment	RA-3
	Hub bearing worn	Replace hub bearing	RA-6
	Front or rear suspension parts loose or broken	Tighten or replace suspension parts	RA-35
Bottoming	Vehicle overloaded	Check loading	
	Shock absorber worn out	Replace shock absorber	RA-36
	Springs weak	Replace spring	RA-36
Sways/pitches	Tires improperly inflated	Inflate tires to proper pressure	RA-3
	Stabilizer bar bent or broken	Inspect stabilizer bar	RA-46
	Shock absorber worn out	Replace shock absorber	RA-36
Front wheel shimmy	Tires worn or improperly inflated	Replace tires or inflate to proper pressure	RA-3
	Wheels out of balance	Balance wheels	
	Shock absorber worn out	Replace shock absorber	RA-36
	Alignment incorrect	Check rear alignment	RA-3
	Hub bearing worn	Replace hub bearing	RA-6
	Ball joints or bushings worn	Inspect ball joints and bushings	RA-40
Abnormal tire wear	Tires improperly inflated	Inflate tires to proper pressure	RA-3
	Shock absorbers worn out	Replace shock absorber	RA-36
	Alignment incorrect	Check toe-in	RA-3
	Suspension parts worn	Replace suspension parts	RA-35

REAR WHEEL ALIGNMENT

1. MAKE FOLLOWING CHECKS AND CORRECT ANY PROBLEMS

(a) Check the tires for wear, size and proper inflation. (See page FA-3)

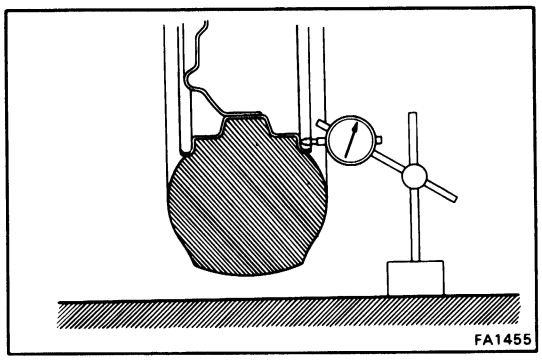

(b) Check wheel runout.

(c) Check the rear wheel bearings for looseness.

Lateral runout: 1.2 mm (0.047 in.) or less

(d) Check the rear suspension for looseness.

(e) Check that the rear absorbers work properly by using the standard bounce test.

2. MEASURE CHASSIS GROUND CLEARANCE (See page FA-3)

If the clearance of the vehicle is not as specified, try to level the vehicle by shaking it down.
If the height of the vehicle is still not correct, check for bad springs worn or loose suspension parts.

NOTE: Before inspecting wheel alignment, adjust chassis ground clearance to spec.

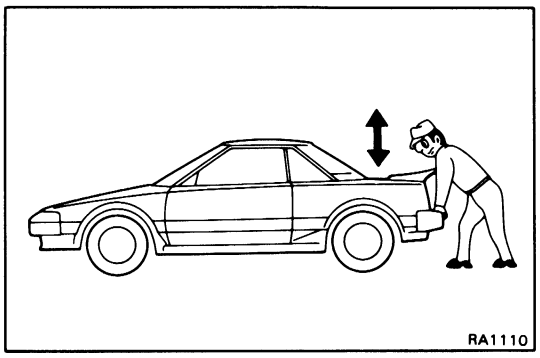

3. INSPECT CAMBER

(a) Rock the vehicle up and down to stabilize the suspension.

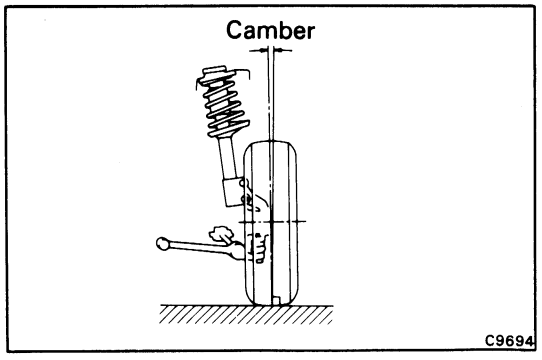

(b) Inspect the camber.

Camber:

Inspection standard: −55′ ± 45′
Left-right error: 30′ or less

If not within specification, inspect and replace any damaged or worn rear suspension parts.

NOTE: After replacing damaged or worn suspension parts, inspect the camber. If camber is still not within standard, adjust the camber.

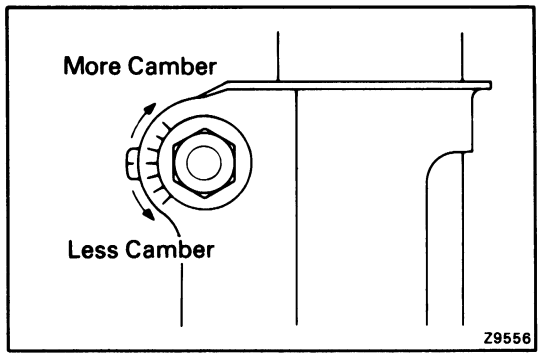

4. ADJUST CAMBER

(a) Loosen the shock absorber set nut.

(b) Turn the cam to adjust.

NOTE: Camber changes about 18′ with each graduation of the cam.

Camber:

Adjustment standard:	**−55′ ± 30′**
Left-right error:	**30′ or less**

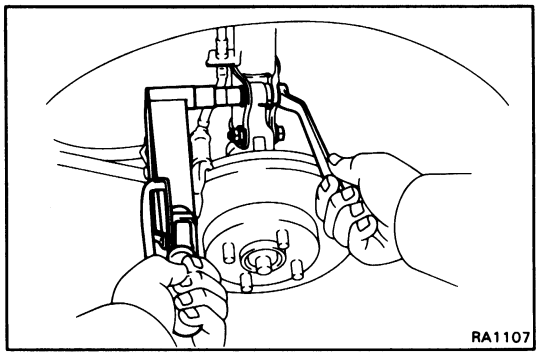

(c) Torque the shock absorber set nut.

Torque: 2,300 kg-cm (166 ft-lb, 226 N·m)

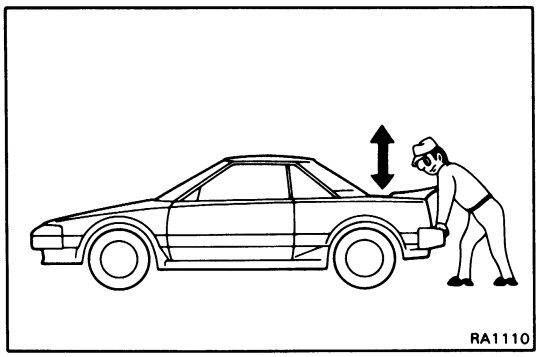

5. INSPECT TOE-IN

Adjust toe-in with a toe-in gauge in the following procedure.

(a) Bounce the vehicle up and down to stabilize the suspension.

(b) Move the vehicle forward about 5 m (16.4 ft) with the front wheels in the straight-ahead position on a level place.

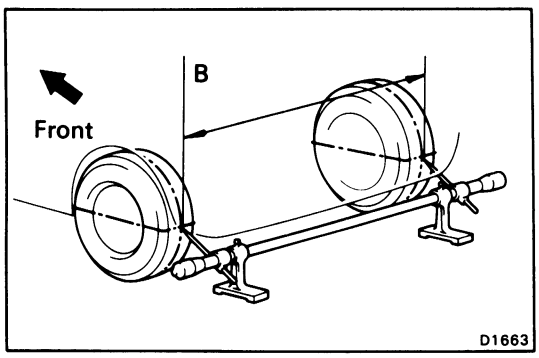

(c) Mark the center of each rear tread and measure the distance between the marks of the right and left tires.

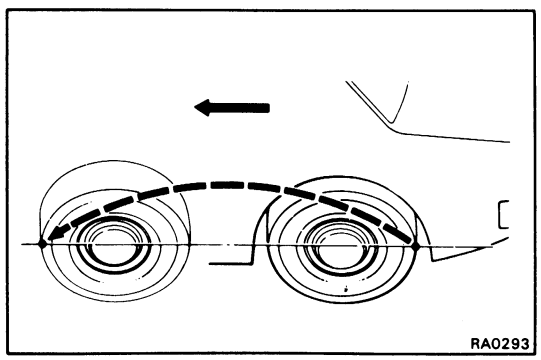

(d) Advance the vehicle until the marks on the rear sides of the tires come to the measuring heights of the gauge on the front side.

NOTE: If the tire rolls too far, repeat from step (b).

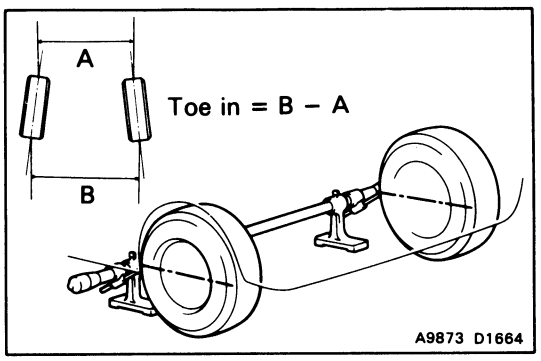

(e) Measure the distance between the marks on the front side of the tires.

Toe-in:
Inspection STD 5 ± 2 mm (0.20 ± 0.08 in.)

If not within specification, inspect and replace any damaged or worn rear suspension parts.

NOTE: After replacing damaged or worn suspension parts, measure the toe-in following (b), (c), (d) and (e) above. If toe-in is still not within standard, adjust the toe-in.

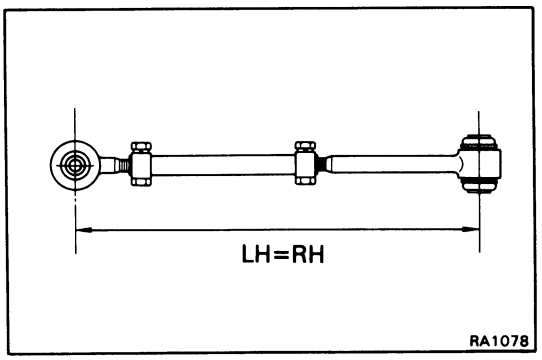

6. ADJUST TOE-IN

(a) Measure the lengths of the left and right suspension arms to see if the length are equal.

If not equal, adjust following the procedures below.

- If the toe-in is less than standard, adjust the length of the shorter arm by the tie rod tube.
- If the toe-in is greater than standard, adjust the length of the longer arm by the tie rod tube.

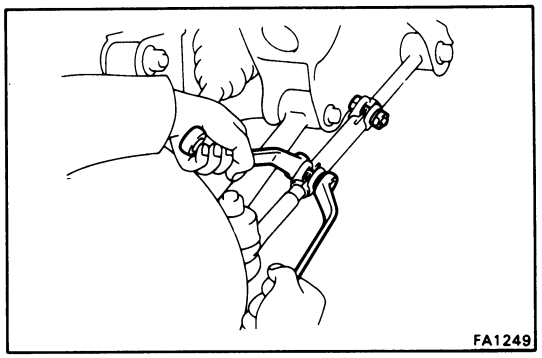

(b) Loosen the clamp bolts and nuts.

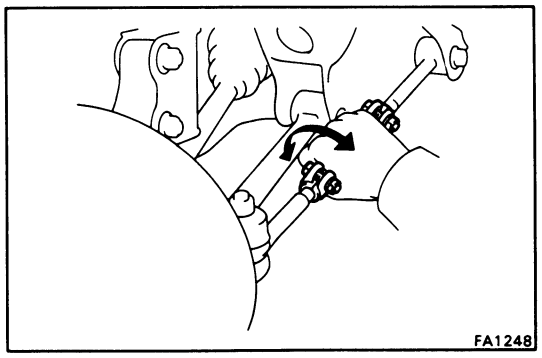

(c) Turn the left and right tie rod tubes an equal amount.

Toe-in:
Adjustment STD 5 ± 1 mm (0.20 ± 0.04 in.)

(d) Tighten the clamp bolts and nuts.

(e) After toe-in adjustment, check that the suspension arm can be rotated by 10° or more.

REAR AXLE HUB AND CARRIER

COMPONENTS

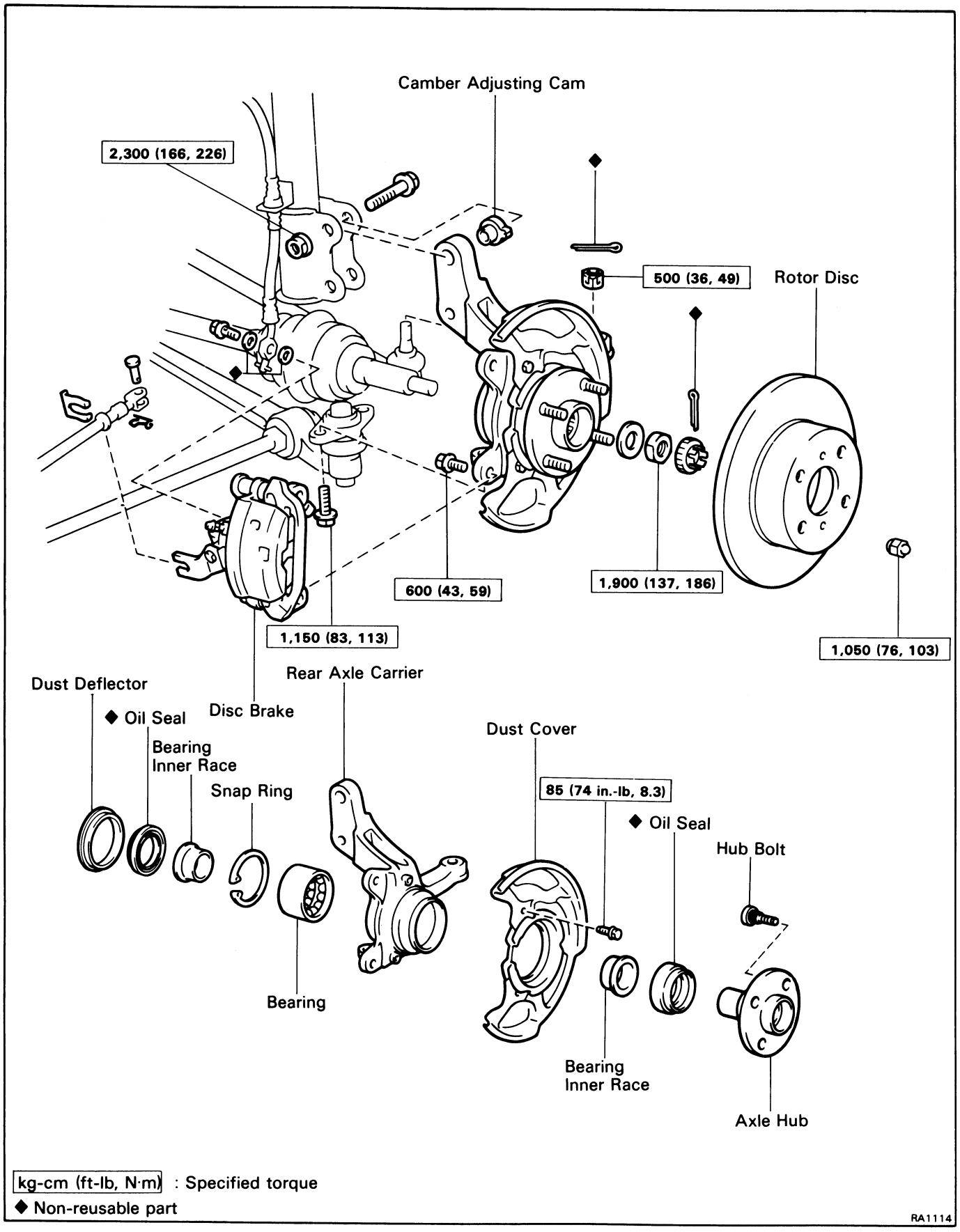

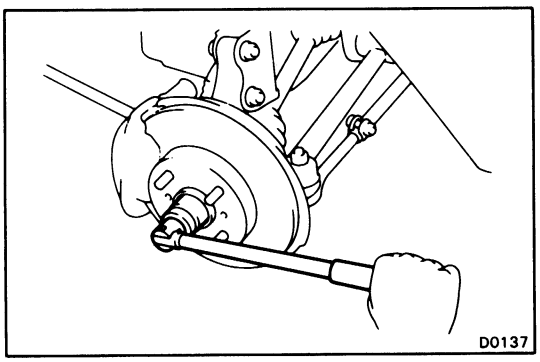

REMOVAL OF REAR AXLE HUB AND CARRIER

(See page RA-6)

1. REMOVE COTTER PIN, BEARING LOCK NUT CAP AND BEARING LOCK NUT

(a) Remove the cotter pin and bearing lock nut cap.

(b) With the parking brake engaged, remove the bearing lock nut.

2. DISCONNECT PARKING BRAKE CABLE

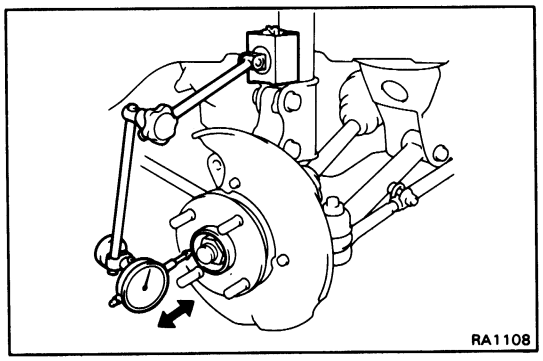

3. REMOVE BRAKE CALIPER

Remove the brake caliper from the rear axle carrier and suspend it with wire.

4. REMOVE ROTOR DISC

5. CHECK BEARING PLAY IN AXIAL DIRECTION

Bearing play: 0.05 mm (0.0020 in.) or less

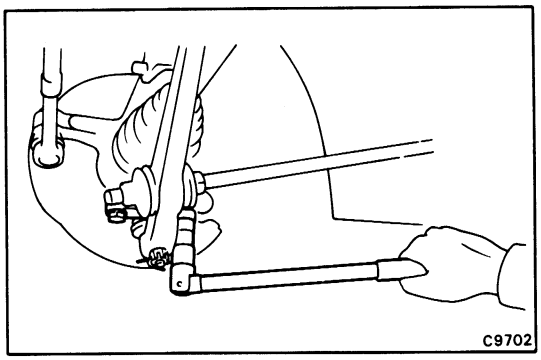

6. DISCONNECT REAR AXLE CARRIER FROM LOWER ARM

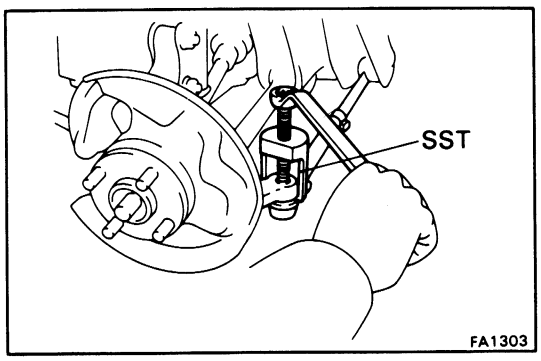

7. DISCONNECT SUSPENSION ARM

(a) Remove the cotter pin and nut.

(b) Using SST, disconnect the suspension arm from the rear axle carrier.

SST 09610-20012

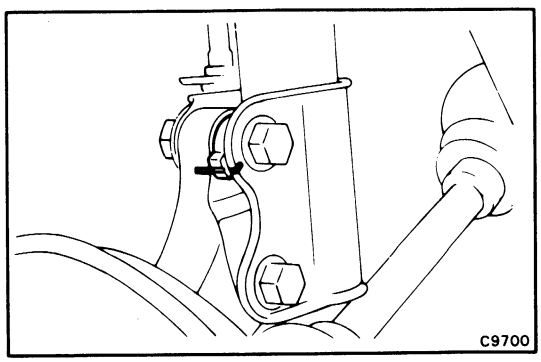

8. REMOVE REAR AXLE CARRIER WITH AXLE HUB

(a) Place matchmarks on the shock absorber's lower bracket and camber adjusting cam.

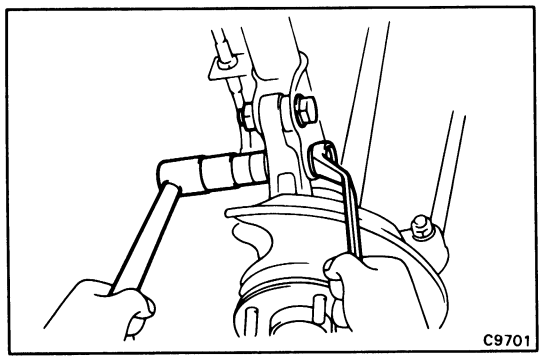

(b) Remove the two axle carrier set nuts and two bolts with the camber adjusting cam.

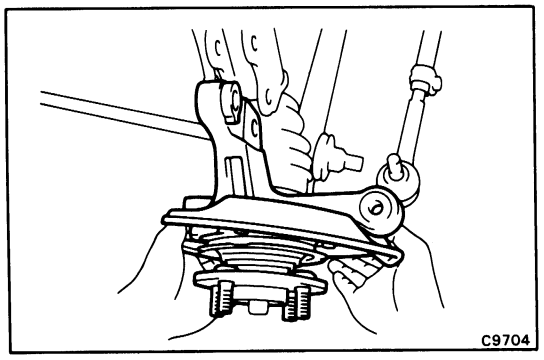

(c) Remove the rear axle carrier and axle hub.

CAUTION: Cover the drive shaft boot with cloth to protect it from damage.

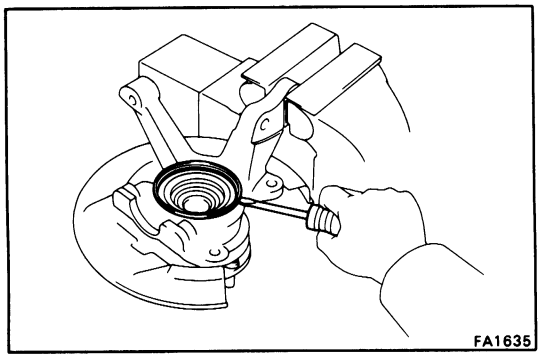

DISASSEMBLY OF REAR AXLE HUB AND CARRIER

(See page RA-6)

1. REMOVE DUST DEFLECTOR

(a) Clamp the rear axle hub and carrier in a soft jaw vise.

(b) Using a screwdriver remove the dust deflector.

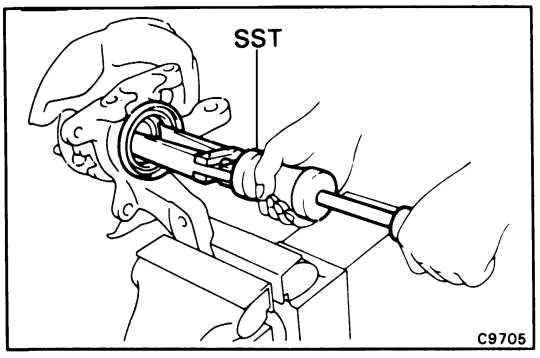

2. REMOVE INNER OIL SEAL

Using SST, remove the oil seal from the rear axle carrier.

SST 09308-00010

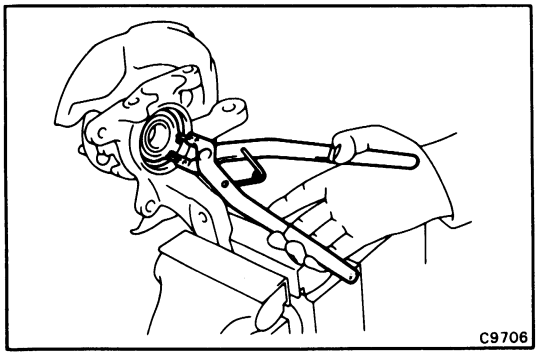

3. REMOVE HOLE SNAP RING

Using snap ring pliers, remove the hole snap ring.

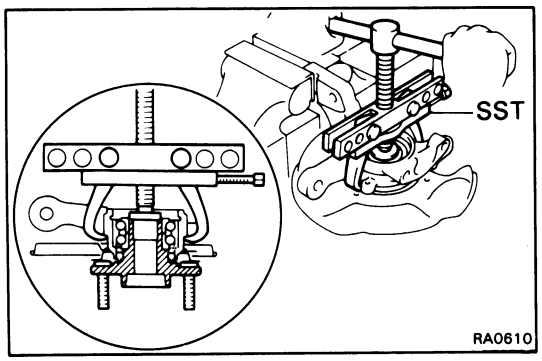

4. REMOVE AXLE HUB

(a) Remove the three bolts holding the disc brake dust cover to the rear axle carrier.

(b) Using SST, remove the axle hub from the rear axle carrier.

SST 09950-20017

(c) Remove the disc brake dust cover.

5. REMOVE BEARING INNER RACE (INSIDE)

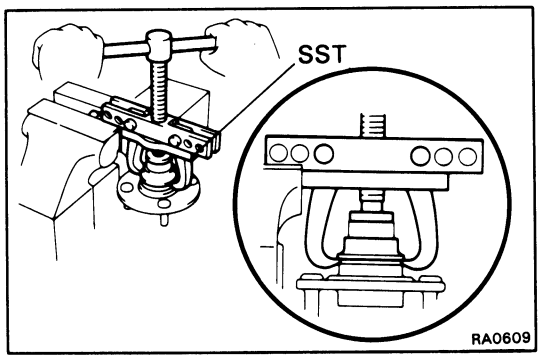

6. REMOVE BEARING INNER RACE (OUTSIDE)

Using SST, remove the inner race (outside) from the rear axle hub.

SST 09950-20017

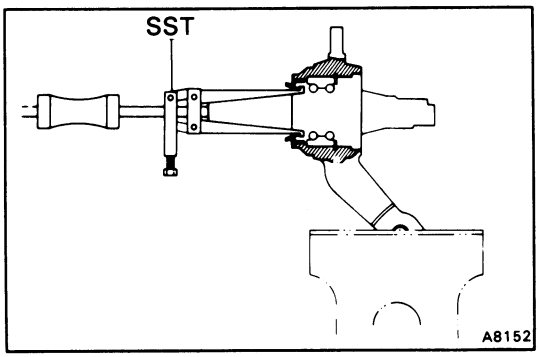

7. REMOVE OUTER OIL SEAL

Using SST, remove the oil seal from the rear axle carrier.

SST 09308-00010

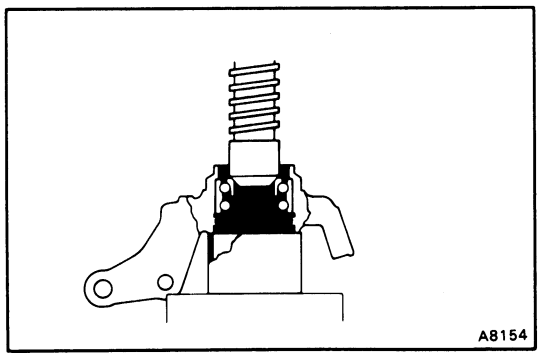

8. REMOVE HUB BEARING

(a) First, place the removed inner race (outside) in the bearing.

(b) Using a press, press out the bearing.

CAUTION: Always replace the bearing as an assembly.

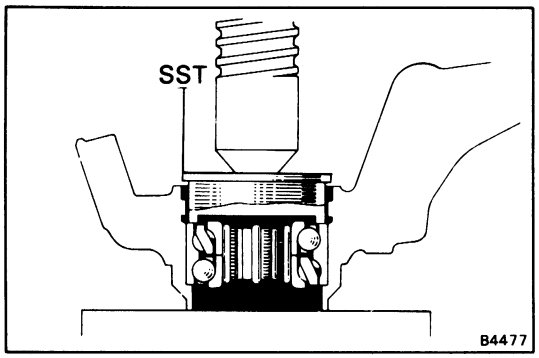

ASSEMBLY OF REAR AXLE HUB AND CARRIER

(See page RA-6)

1. INSTALL HUB BEARING

Using SST and a press, press a new bearing into the rear axle carrier.

SST 09608-32010

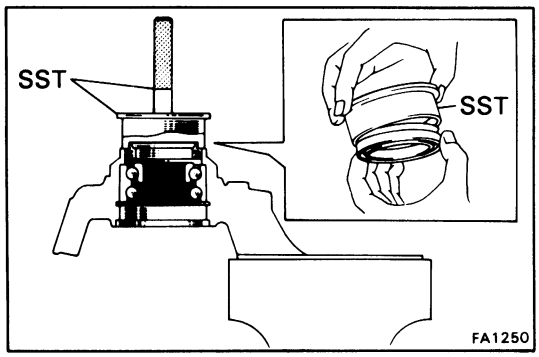

2. INSTALL NEW OUTER OIL SEAL

(a) Place a new bearing inner race (outside) on the hub bearing.

(b) Rotate and insert the lip of a new oil seal into SST.

SST 09608-32010

(c) Using SST, drive the oil seal into the rear axle carrier.

SST 09608-32010 and 09710-14012 (09710-00050)

(d) Apply MP grease to the oil seal lip.

3. INSTALL DISC BRAKE DUST COVER

Install the disc brake dust cover with the three bolts.

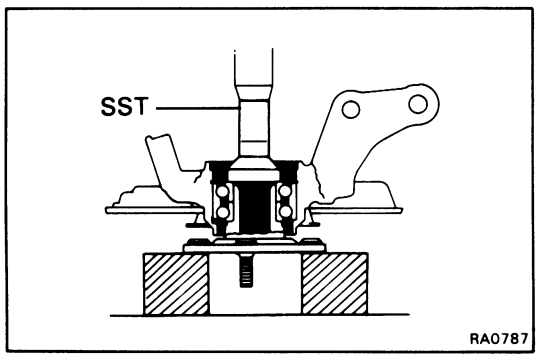

4. INSTALL AXLE HUB

(a) Place a new bearing inner race (inside) on the hub bearing.

(b) Using SST and a press, press the hub into the rear axle carrier.

SST 09310-35010

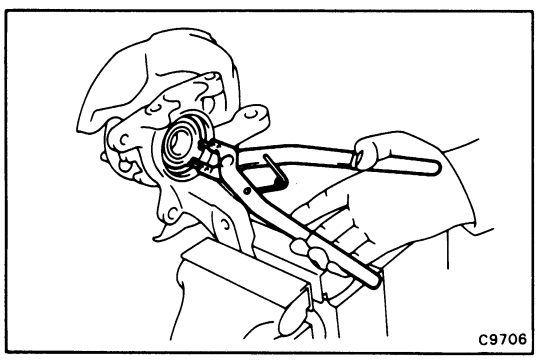

5. INSTALL HOLE SNAP RING

Using pliers, install a hole snap ring into the rear axle carrier.

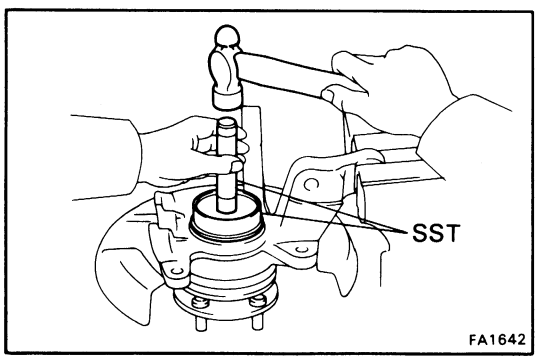

6. INSTALL INNER OIL SEAL

(a) Rotate and insert the lip of a new oil seal into SST.

SST 09608-32010

(b) Using SST, tap the oil seal into the rear axle carrier.

SST 09608-32010 and 09710-14012 (09710-00050)

(c) Apply MP grease to the oil seal lip.

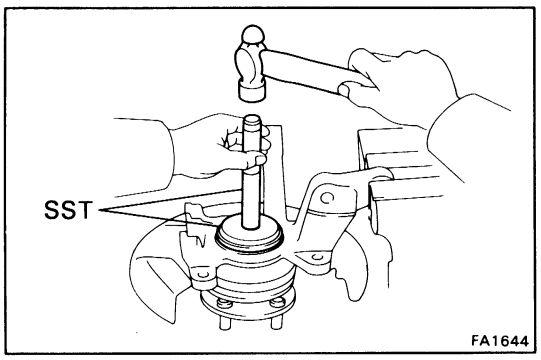

7. INSTALL DUST DEFLECTOR

Using SST, drive the dust deflector to the rear axle carrier.
SST 09608-35014 (09608-06020, 09608-06180)

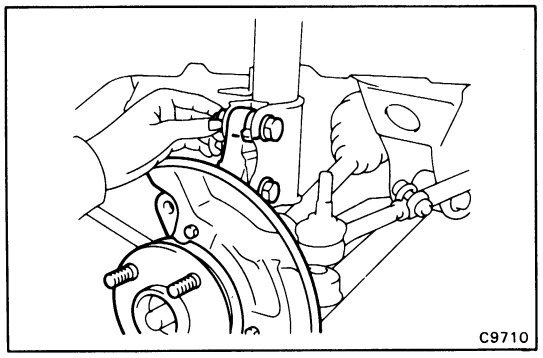

INSTALLATION OF REAR AXLE HUB AND CARRIER

(See page RA-6)

1. INSTALL REAR AXLE CARRIER WITH AXLE HUB

(a) Place the rear axle carrier to the shock absorber's lower bracket.

(b) Install the camber adjusting cam, two set bolts and two nuts.

(c) Align the matchmarks of the camber adjusting cam and shock absorber's lower bracket.

(d) Torque the nuts.

Torque: 2,300 kg-cm (166 ft-lb, 226 N·m)

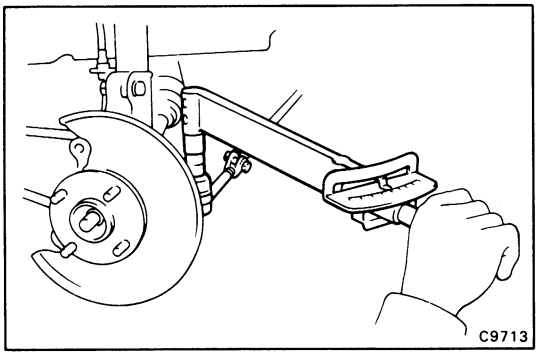

2. CONNECT SUSPENSION ARM

(a) Torque the nut.

Torque: 500 kg-cm (36 ft-lb, 49 N·m)

(b) Install a new cotter pin.

NOTE: If the cotter pin does not line up, correct by tightening the nut by the smallest amount possible.

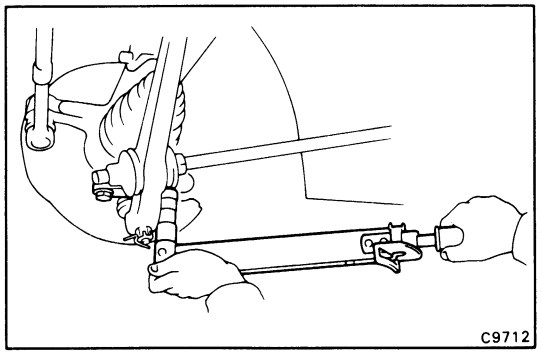

3. CONNECT REAR AXLE CARRIER TO LOWER ARM

Torque: 1,150 kg-cm (83 ft-lb, 113 N·m)

4. INSTALL ROTOR DISC

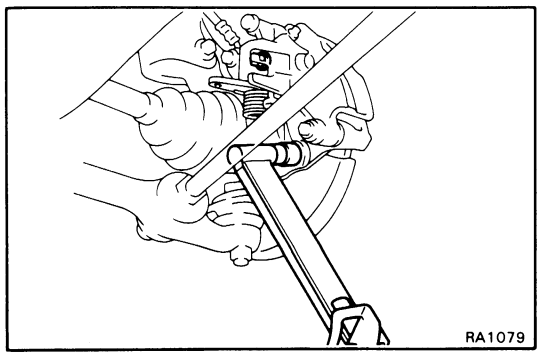

5. INSTALL BRAKE CALIPER

Torque: 600 kg-cm (43 ft-lb, 59 N·m)

6. CONNECT PARKING BRAKE CABLE

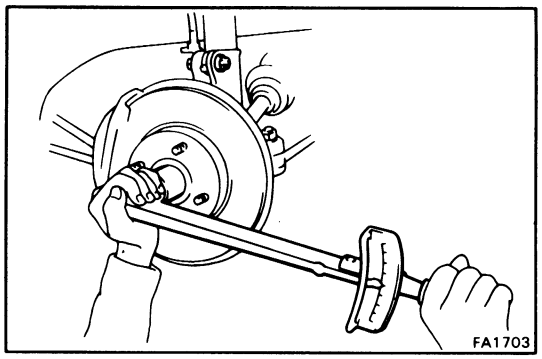

7. INSTALL PLATE WASHER, BEARING LOCK NUT, BEARING LOCK NUT CAP AND NEW COTTER PIN

(a) Install the plate washer and lock nut.

(b) With the parking brake engaged, and tighten the nut.

Torque: 1,900 kg-cm (137 ft-lb, 186 N·m)

(c) Install the lock nut cap and a new cotter pin.

8. INSPECT REAR WHEEL ALIGNMENT
(See page RA-3)

REPLACEMENT OF REAR AXLE HUB BOLT

(See page RA-6)

1. DISCONNECT PARKING BRAKE CABLE

2. REMOVE BRAKE CALIPER

Remove the brake caliper from the axle carrier and suspend it with wire.

3. REMOVE ROTOR DISC

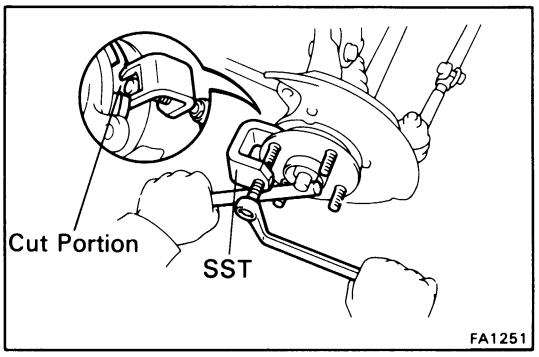

4. REMOVE REAR AXLE HUB BOLT

(a) Align the brake dust cover cut portion and axle hub bolt.

(b) Using SST, remove the axle hub bolt.

SST 09650-17010

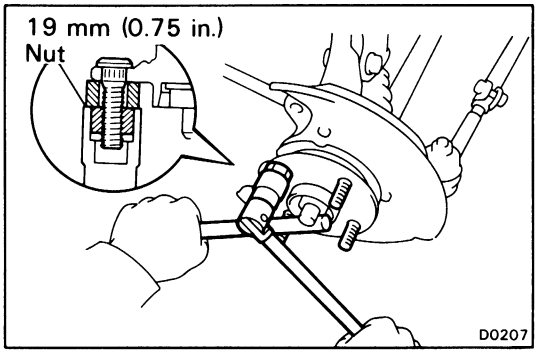

5. INSTALL REAR AXLE HUB BOLT

Hold the rear axle hub, and install a new hub bolt.

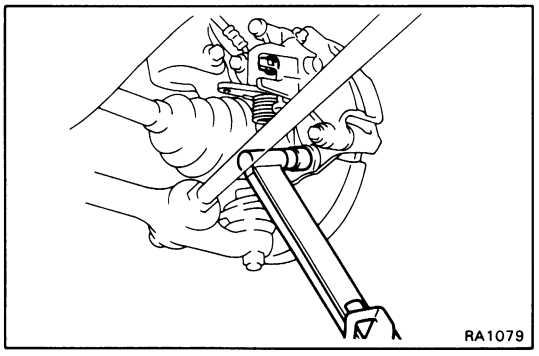

6. INSTALL ROTOR DISC

7. INSTALL DISC BRAKE CALIPER TO REAR AXLE CARRIER

Torque: 600 kg-cm (43 ft-lb, 59 N·m)

8. CONNECT PARKING BRAKE CABLE

REAR DRIVE SHAFT

COMPONENTS

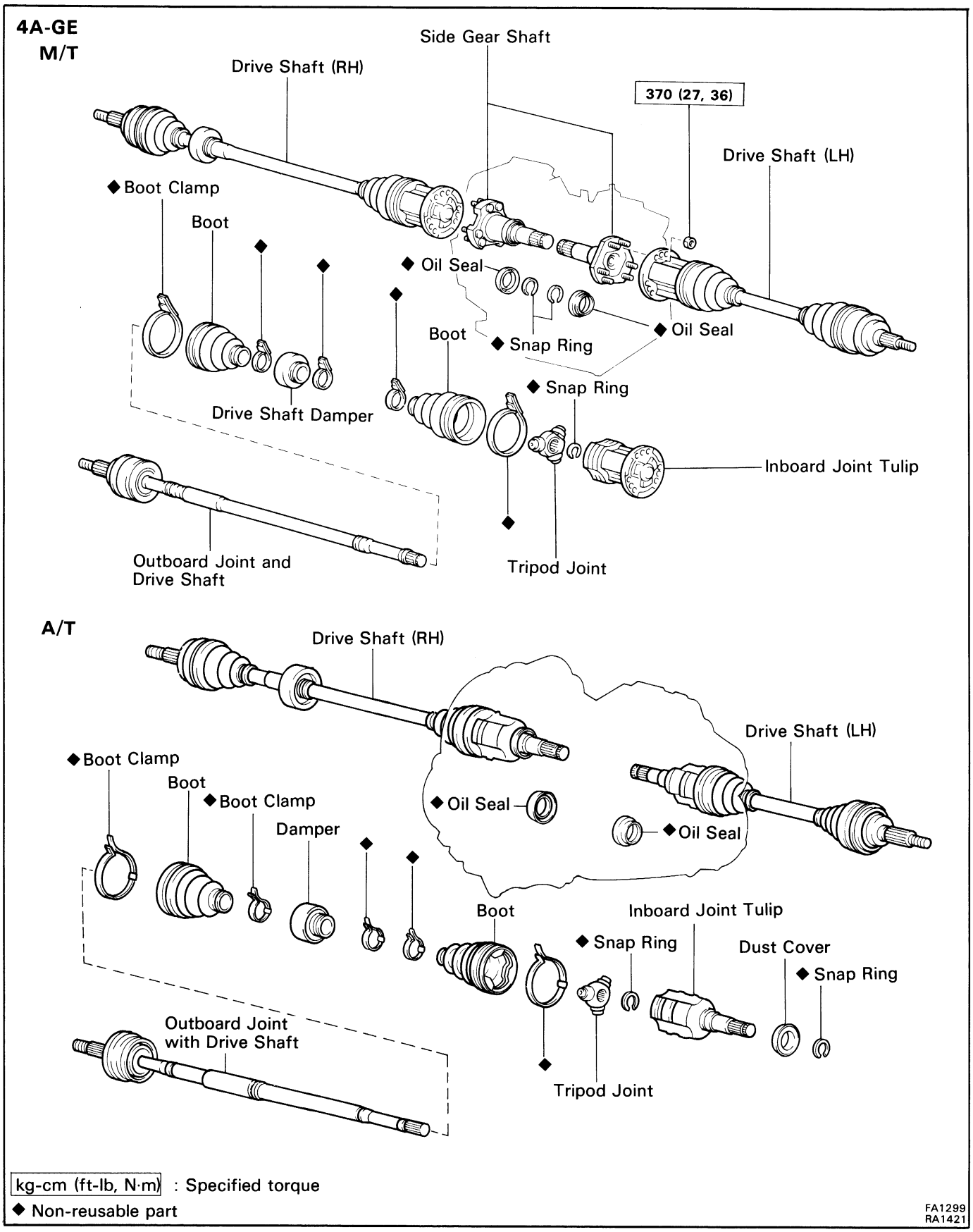

COMPONENTS (Cont'd)

4A-GZE

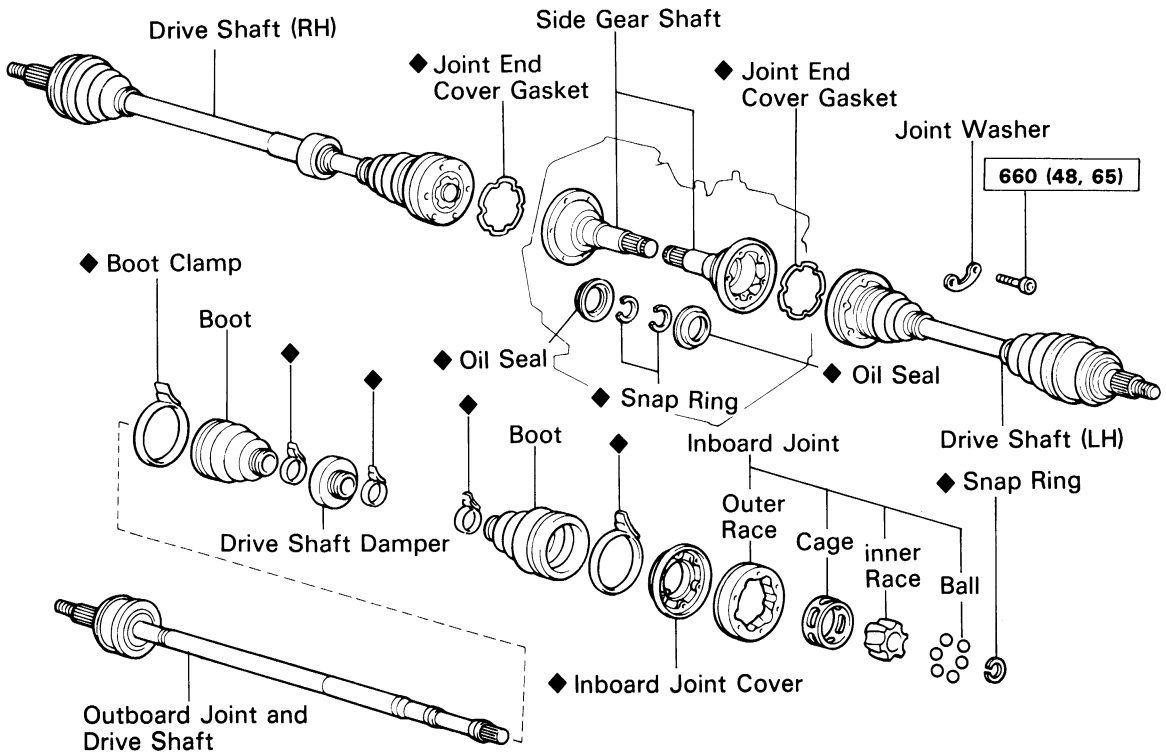

kg-cm (ft-lb, N·m) : Specified torque

◆ Non-reusable part

RA1319

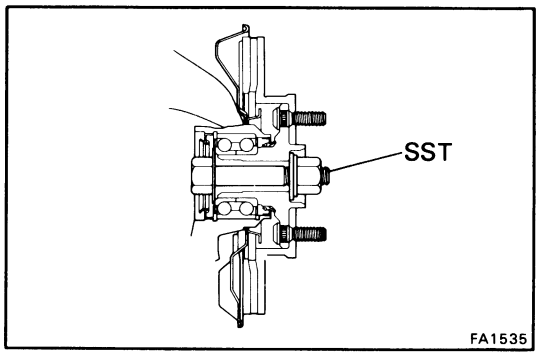

FA1535

CAUTION: The hub bearing could be damaged if it is subjected to the vehicle weight, such as when moving the vehicle with the drive shaft removed.
Therefore, if it is absolutely necessary to place the vehicle weight on the hub bearing, first support it with SST.

SST 09608-16041 (09608-02020, 09608-02040)

REMOVAL OF REAR DRIVE SHAFT

(See page RA-14)

1. DRAIN GEAR OIL OR FLUID

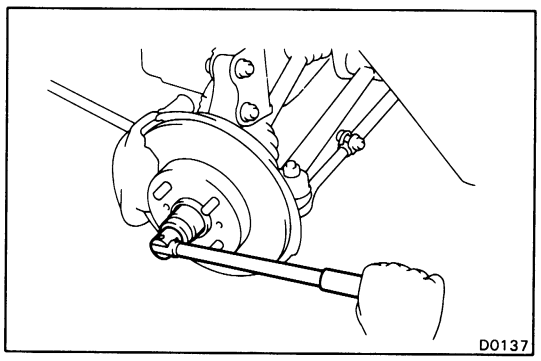

2. REMOVE COTTER PIN, BEARING LOCK NUT CAP AND BEARING LOCK NUT

(a) Remove the cotter pin and lock nut cap.

(b) Set the parking brake and remove the nut.

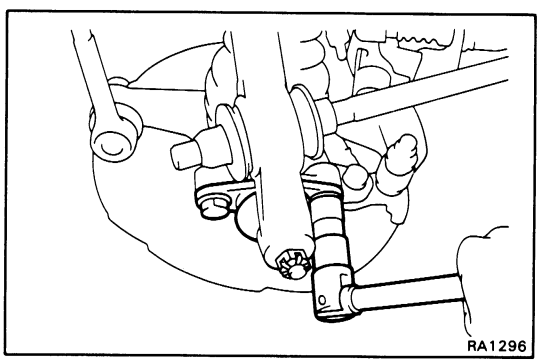

3. DISCONNECT LOWER ARM FROM REAR AXLE CARRIER

(a) Remove the two bolts holding the ball joint to the rear axle carrier.

(b) Disconnect the lower arm.

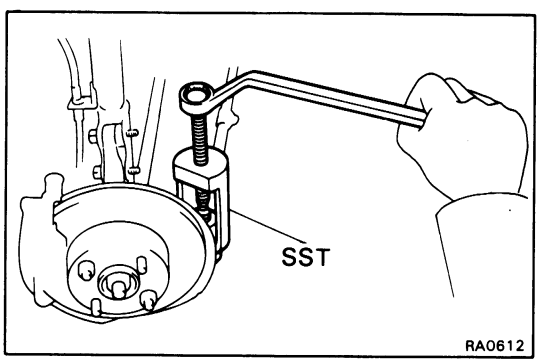

4. DISCONNECT SUSPENSION ARM

(a) Remove the cotter pin and nut.

(b) Using SST, disconnect the suspension arm from the rear axle carrier.

SST 09610-20012

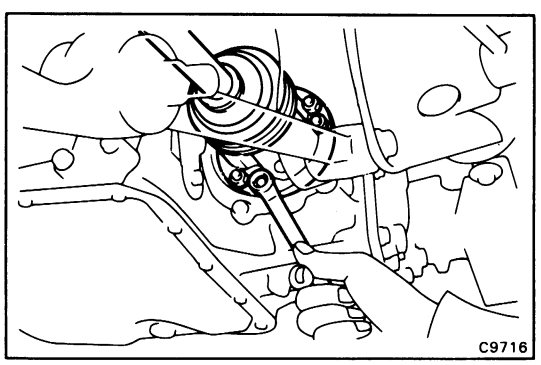

5. (4A-GE (M/T), 4A-GZE) DISCONNECT REAR DRIVE SHAFT FROM DIFFERENTIAL SIDE GEAR SHAFT

(4A-GE (M/T))

(a) Remove the six nuts while depressing the brake pedal.

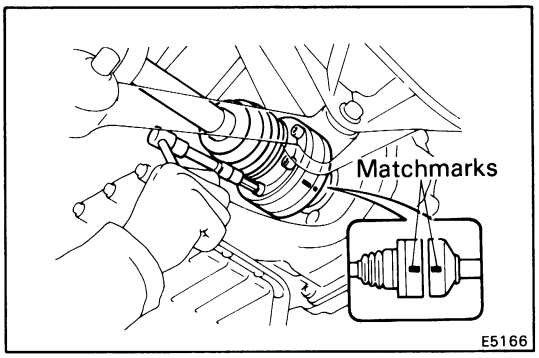

(4A-GZE)

(a) Place matchmarks on the drive shaft and side gear shaft.

CAUTION: Do not punch the marks.

(b) Using SST, remove the six hexagon bolts and the three washers while depressing the brake pedal.

SST 09043-88010

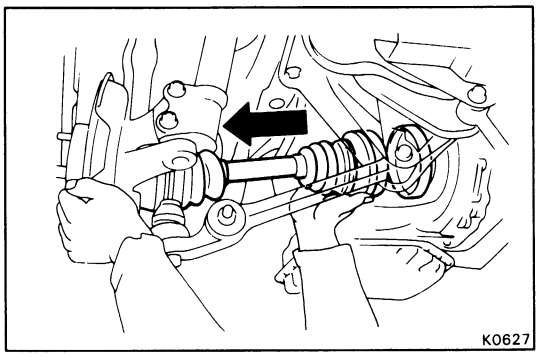

(c) Push the rear axle carrier towards the outside of the vehicle, and separate the drive shaft from the side gear shaft.

CAUTION: When moving the drive shaft, do not compress the boot.

(d) Remove the joint end cover gasket from the drive shaft.

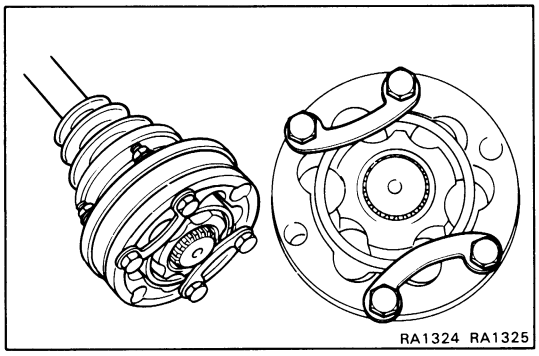

(e) Use bolts, nuts and washers to keep the inboard joint together.

CAUTION: Tighten the bolts by hand to avoid scratching the flange surface.

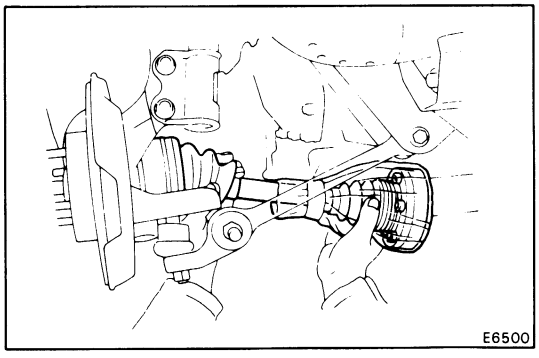

(f) Cover the inboard joint and side gear shaft vinyl bags to keep out dust and sand.

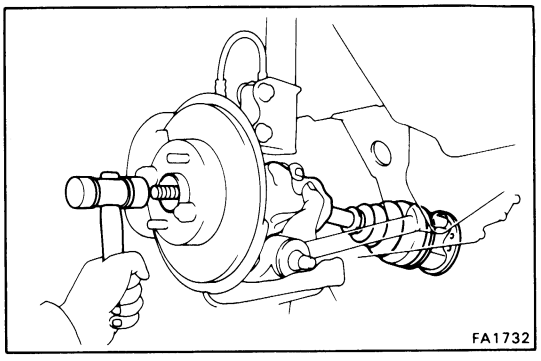

6. REMOVE REAR DRIVE SHAFT

(4A-GE (M/T), 4A-GZE)

Using a plastic hammer, tap out the drive shaft from the axle hub.

CAUTION: Cover the drive shaft boot with cloth to protect it from damage.

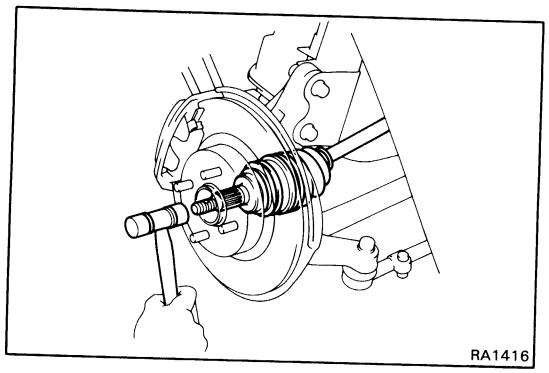

(4A-GE (A/T))

(a) Using a plastic hammer, disconnect the drive shaft from the axle hub.

CAUTION: Cover the drive shaft boot with cloth to protect it from damage.

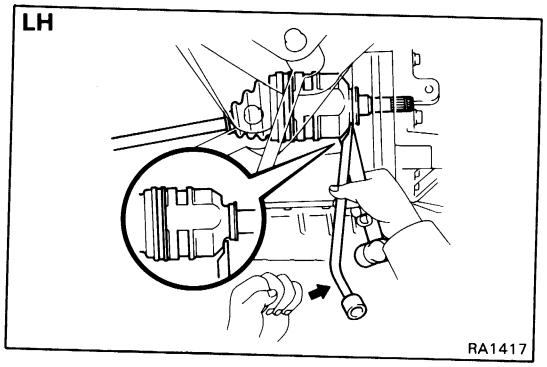

(b) Using hub nut wrench and hammer handle or an equivalent, remove the rear drive shaft as shown.

NOTE: Be careful not to damage the dust cover.

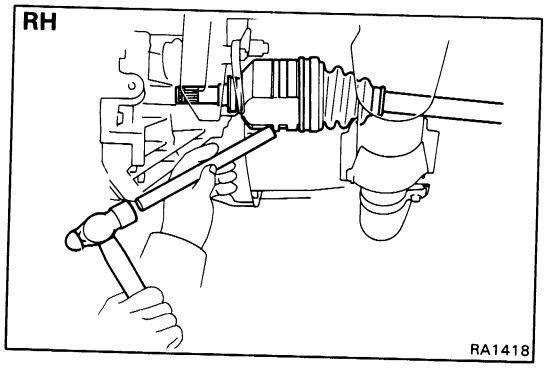

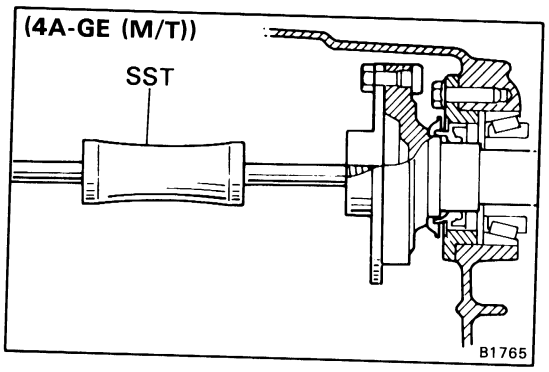

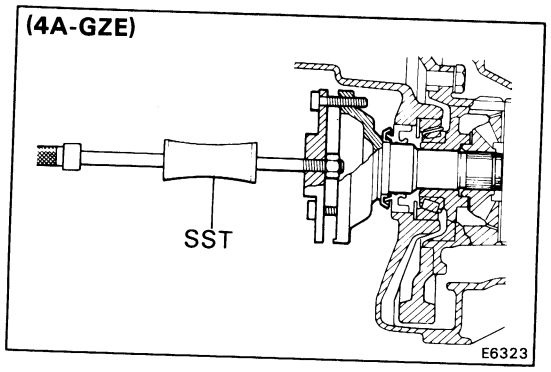

7. **(4A-GE (M/T), 4A-GZE)**
REMOVE SIDE GEAR SHAFT FROM TRANSAXLE

(a) In order to install the side gear shaft, push the side gear shaft to the differential.
Measure and note the distance between the transaxle case and side gear shaft.

(b) Using SST, drive out the side gear shaft.

SST 09520-32012

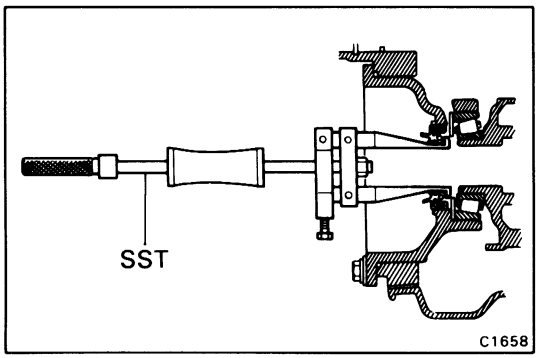

8. IF NECESSARY, REPLACE SIDE GEAR SHAFT OIL SEAL

(a) Using SST, drive out the oil seal.

SST 09308-00010

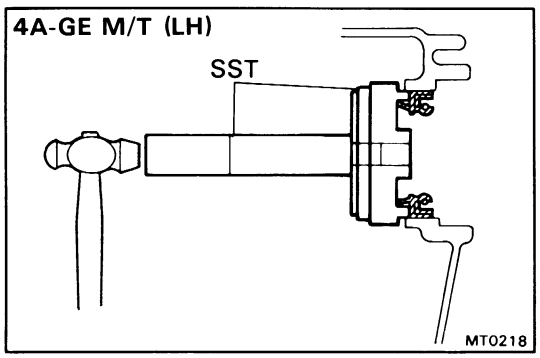

(b) Using SST and a hammer, tap in a new oil seal.

SST 4A-GE M/T (LH)
09350-32014 (09351-32111, 09351-32130)

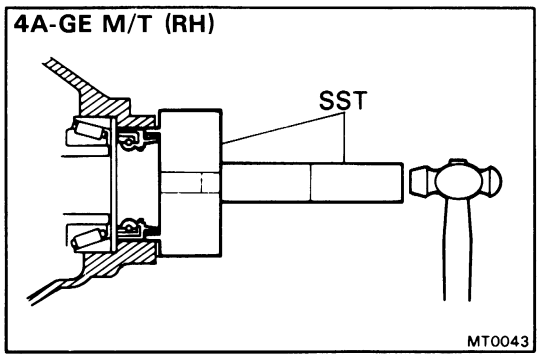

4A-GE M/T (RH)
09350-32014 (09351-32130, 09351-32150)

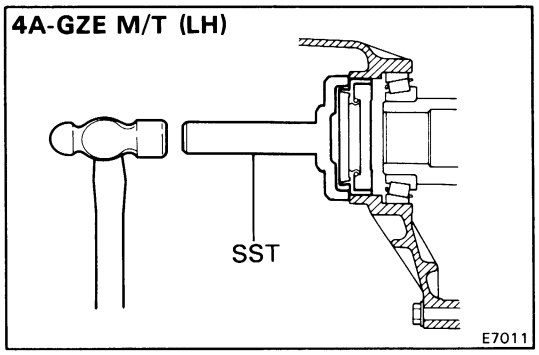

4A-GZE M/T (LH)
09223-15010

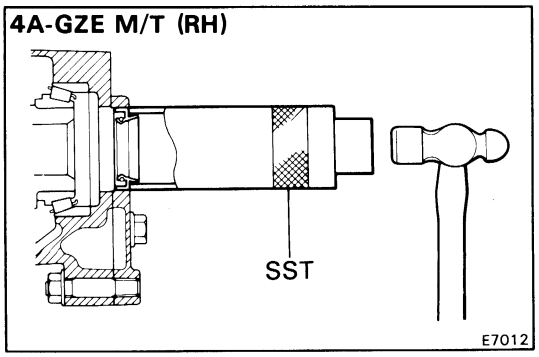

4A-GZE M/T (RH)
09316-60010 (09316-00010)

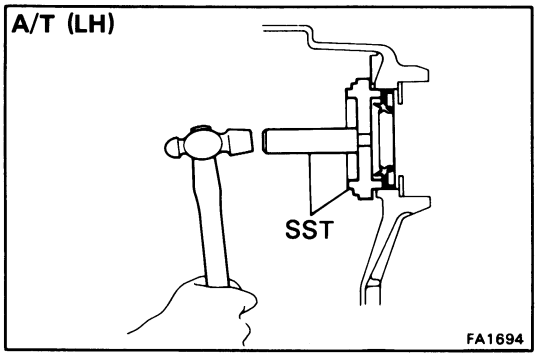

A/T (LH)
09350-32014 (09351-32111) and 09631-12020

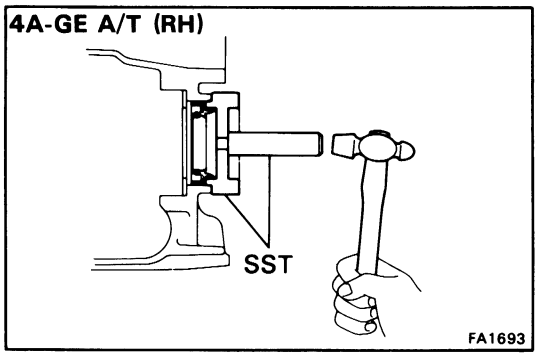

A/T (RH)
09350-32014 (09351-32150) and 09631-12020

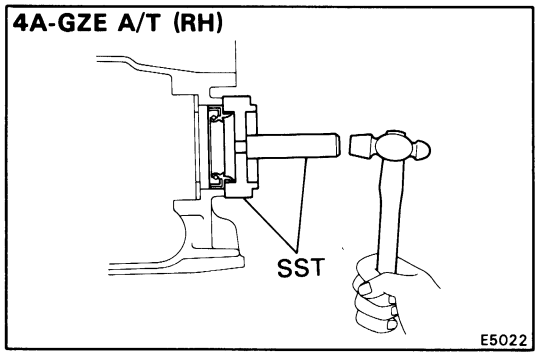

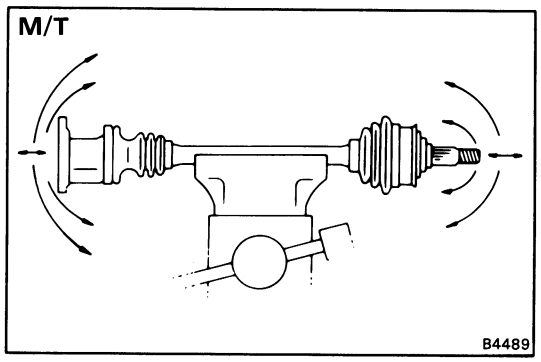

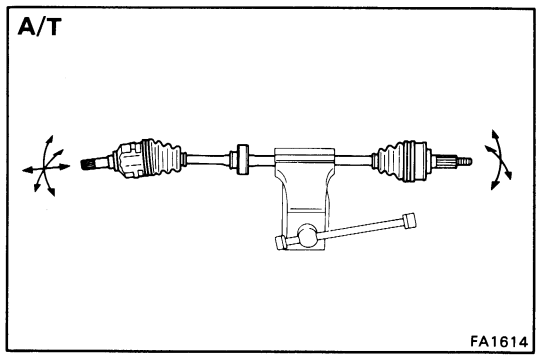

DISASSEMBLY OF REAR DRIVE SHAFT

(See page RA-14)

(4A-GE)

1. CHECK DRIVE SHAFT

(a) Check to see that there is no play in the inboard and outboard joint.

(b) Check to see that the inboard joint slides smoothly in the thrust direction.

(c) Check to see that there is no play in the radial direction of the inboard joint.

(d) Check for damage to boot.

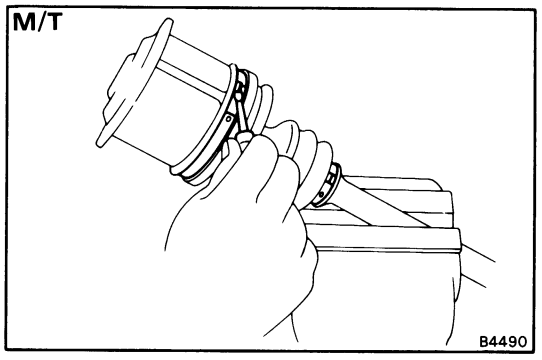

2. REMOVE INBOARD JOINT BOOT CLAMPS

(a) Using a screwdriver, remove the two boot clamps.

(b) Slide the inboard joint boot toward the outboard joint.

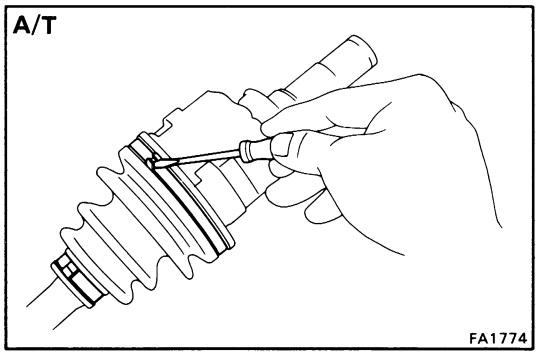

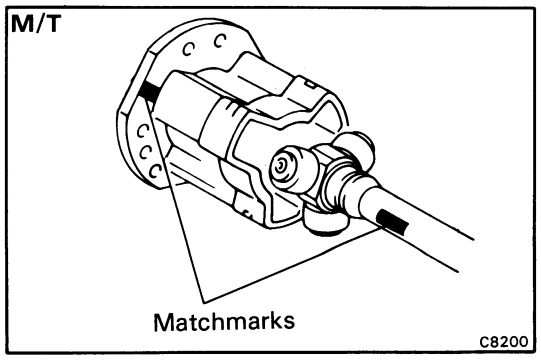

3. DISASSEMBLE INBOARD JOINT TULIP

(a) Place matchmarks on the inboard joint tulip and tripod.

CAUTION: Do not punch the marks.

(b) Remove the inboard joint tulip from the drive shaft.

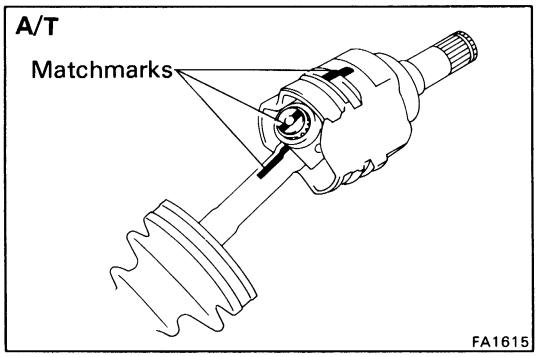

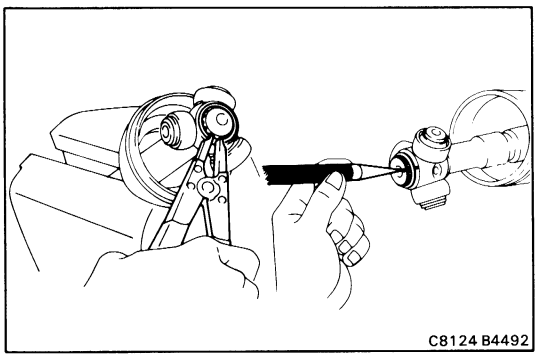

4. DISASSEMBLE TRIPOD JOINT

(a) Using snap ring pliers, remove the snap ring.

(b) Using a punch, place matchmarks on the shaft and tripod.

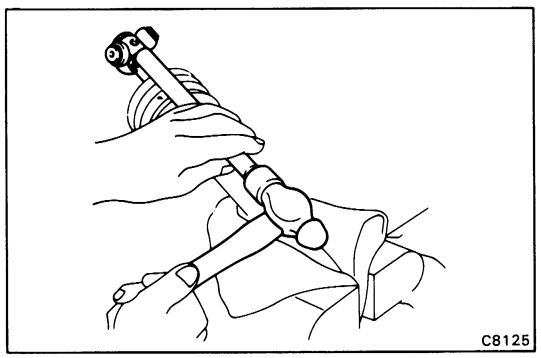

(c) Using a hammer and brass bar, drive out the tripod joint from the drive shaft.

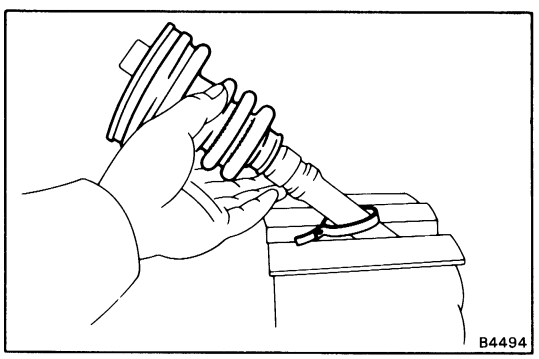

5. REMOVE BOOTS

(a) Remove the boot of the inboard joint.

(b) Remove the drive shaft damper. (RH shaft only)

(c) Remove the boot of the outboard joint.

(d) Check the inside and outside of the boots for damage.

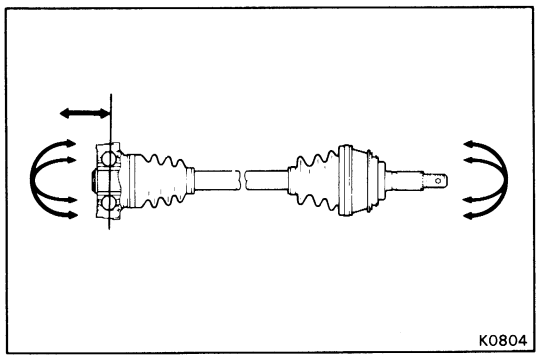

(4A-GZE)

1. CHECK DRIVE SHAFT

(a) Check to see that there is play in the inboard and outboard joint.

(b) Check to see that the inboard joint slides smoothly in the thrust direction.

(c) Check to see that there is no play in the radial direction of the inboard joint.

(d) Check for damage to boot.

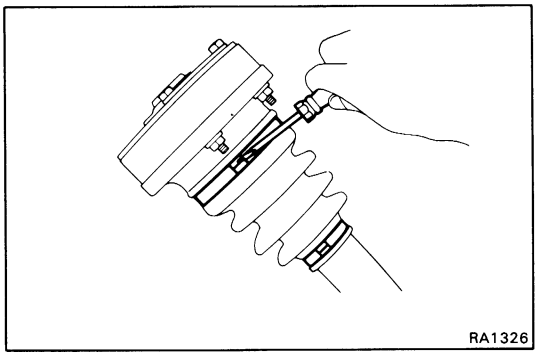

2. REMOVE BOOT CLAMPS

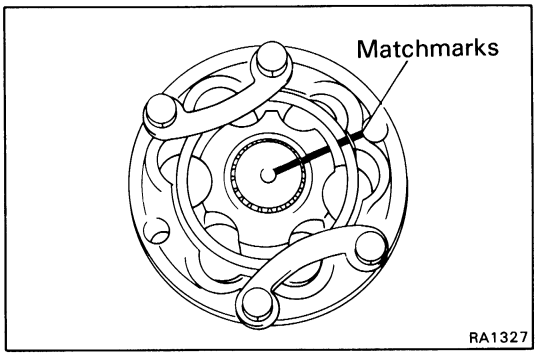

3. DISASSEMBLE INBOARD JOINT

(a) Place matchmarks on the inboard joint and drive shaft.

CAUTION: Do not punch the marks.

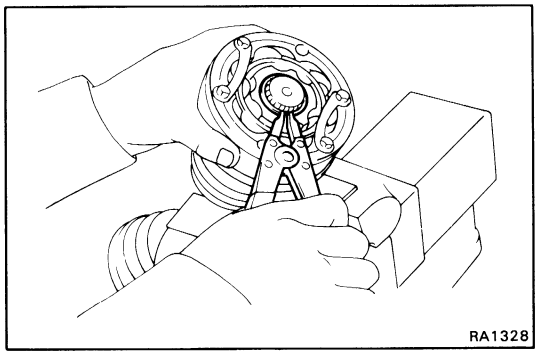

(b) Using snap ring pliers, remove the snap ring.

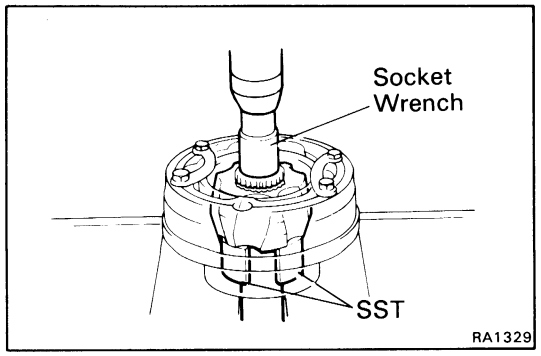

(c) Using SST and a press, remove the inboard joint from the drive shaft.

SST 09726-10010 (09726-00030)

(d) Remove the bolts, nuts and washers from the inboard joint.

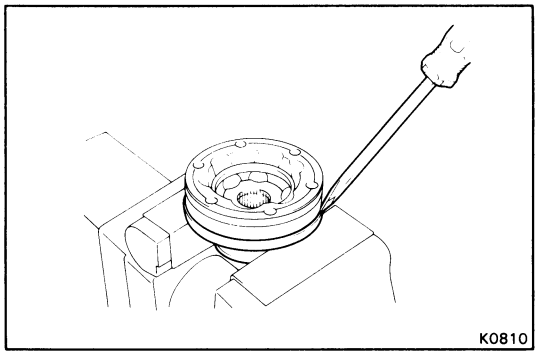

(e) Using a hammer and screwdriver, remove the inboard joint from inboard joint cover.

CAUTION: When lifting the inboard joint, hold onto the inner race and outer race.

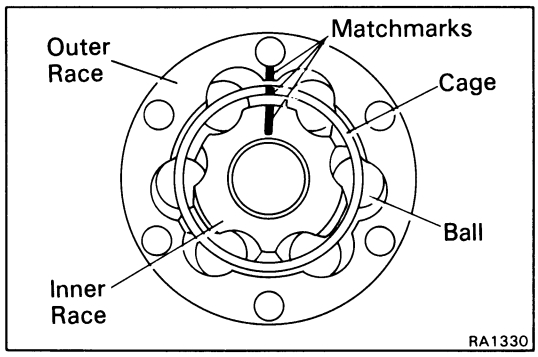

NOTE: Should the joint become disassembled, reassemble it in the way shown in the illustration.

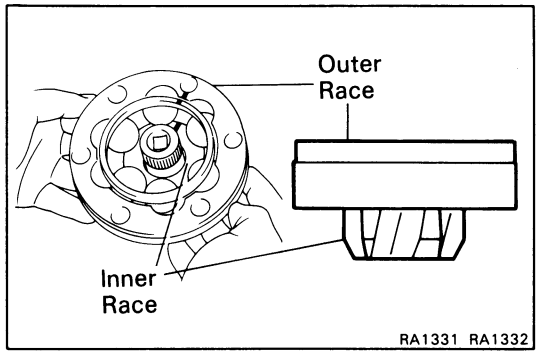

SERVICE HINT

(a) Align the matchmarks placed before disassembly.

(b) Insert the spark plug wrench into the inner race.

(c) Lift the outer race and cage, and insert the six balls.

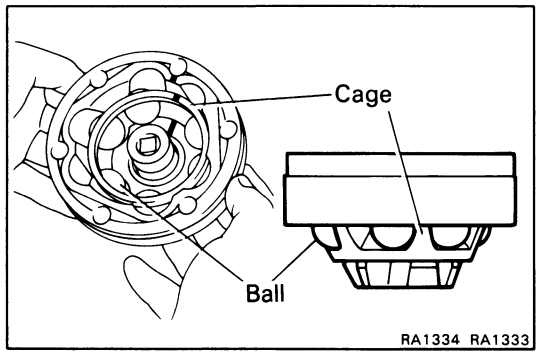

(d) Jiggle the outer race and cage as shown in the illustration to place the balls in their respective grooves.

(e) Lower the outer race and cage so that they fit tightly with the inner race.

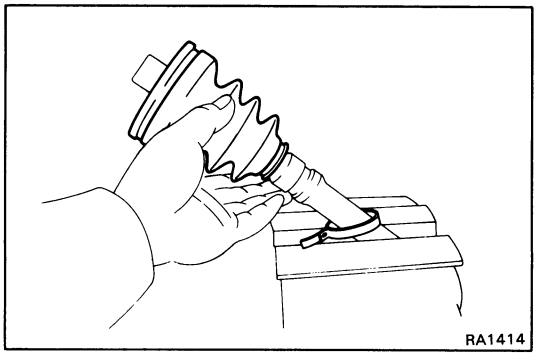

4. REMOVE BOOTS

(a) Remove the boot of the inboard joint.

(b) Remove the drive shaft damper.(RH shaft only)

(c) Remove the boot of the outboard joint.

(d) Check the inside and outside of the boots for damage.

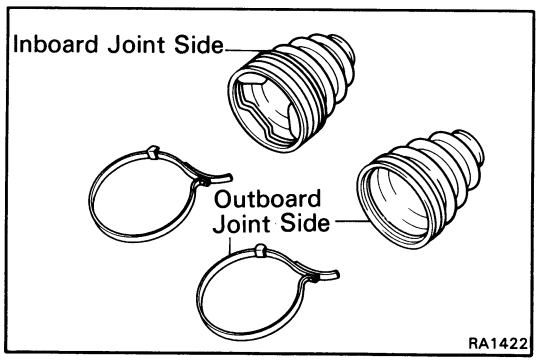

ASSEMBLY OF REAR DRIVE SHAFT

(See page RA-14)

(4A-GE)

1. TEMPORARILY INSTALL OUTBOARD JOINT BOOT AND NEW BOOT CLAMPS

CAUTION: The boot and clamp of the outboard joint are smaller than those of the inboard joint.

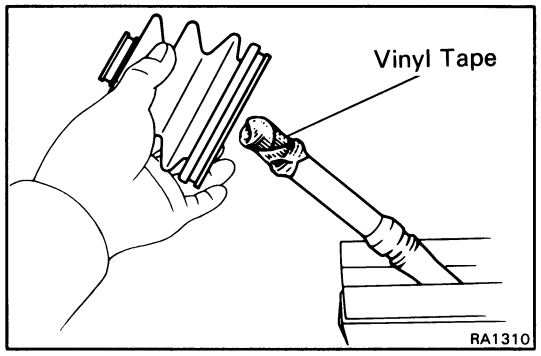

NOTE: Before installing the boot, wrap vinyl tape around the spline of the shaft to prevent damaging the boot.

(a) Temporarily install the boot and a new clamp to the outboard joint.

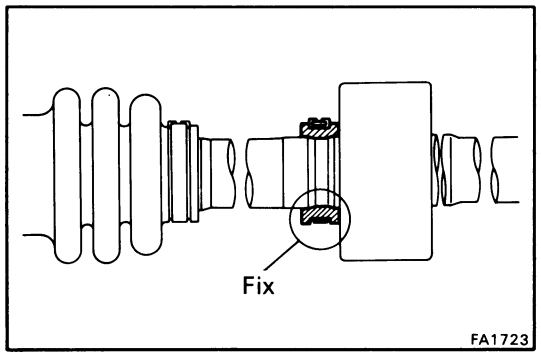

(b) Install the drive shaft damper and a new clamp. (RH shaft only)

NOTE: As shown in the illustration, fix the clamp position in line with the groove of the drive shaft.

(c) Temporarily install the boot and a new clamp (for inboard joint) to the drive shaft.

2. ASSEMBLE TRIPOD JOINT

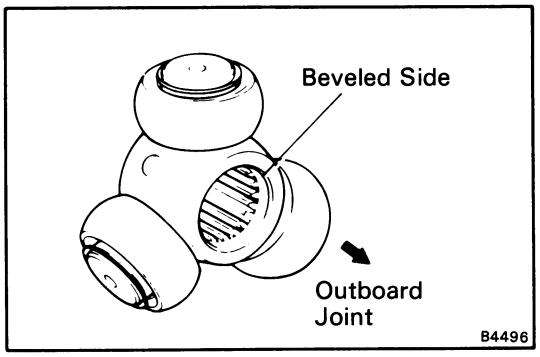

(a) Face the beveled side of the tripod axial spline toward the outboard joint.

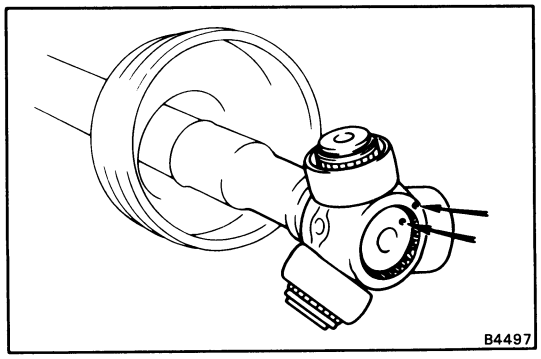

(b) Align the matchmarks placed before disassembly.

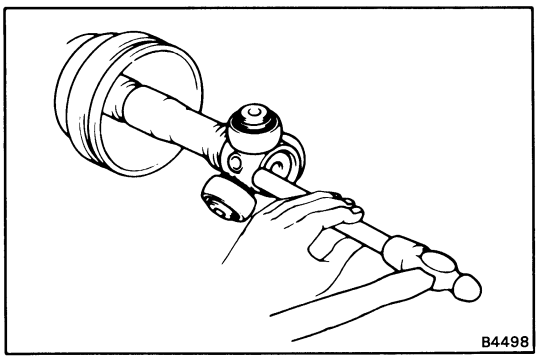

(c) Using a brass bar and hammer, tap the tripod onto the drive shaft.

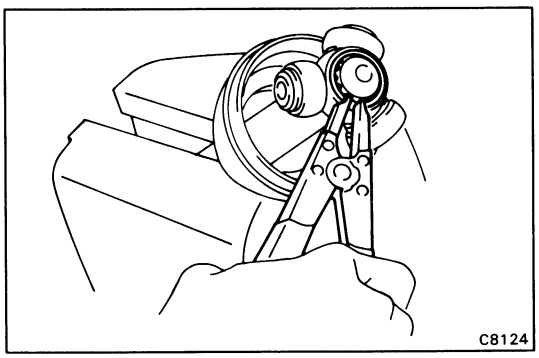

(d) Using snap ring pliers, install a new snap ring.

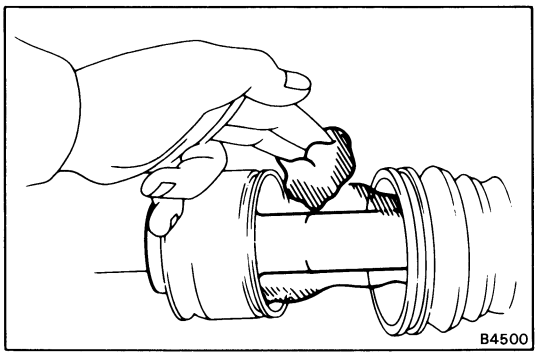

3. ASSEMBLE BOOT TO OUTBOARD JOINT

Before assembling the boot, pack in grease.

Grease capacity: 120 – 130 g (0.26 – 0.29 lb)

NOTE: Use the grease (black) supplied in the boot kit.

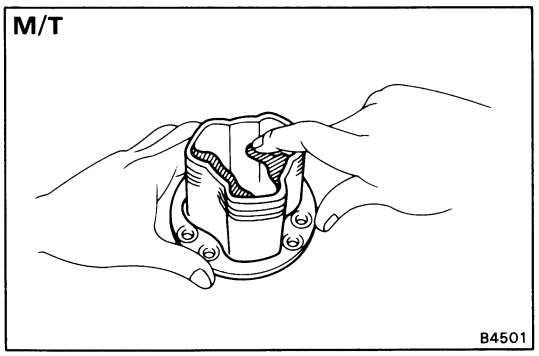

4. ASSEMBLE INBOARD JOINT TULIP TO DRIVE SHAFT

(a) Pack in grease to the tulip and boot.

Grease capacity:
M/T 212 – 222 g (0.47 – 0.49 lb)
A/T 180 – 190 g (0.40 – 0.42 lb)

NOTE: Use the grease (brown) supplied in the boot kit.

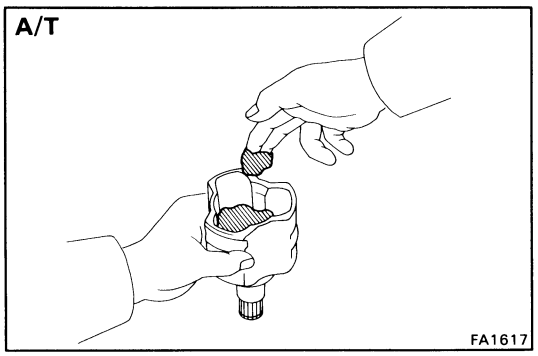

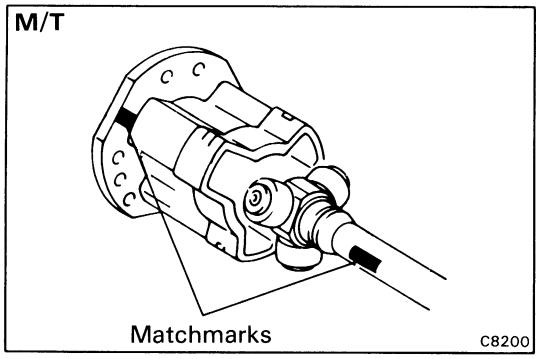

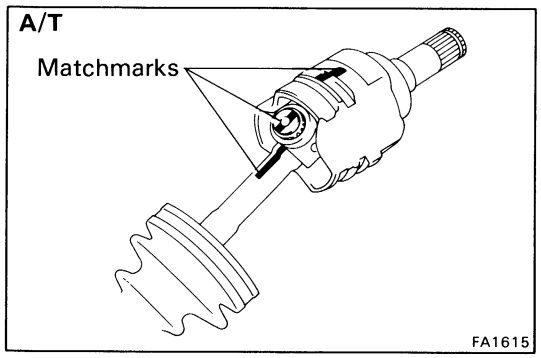

(b) Align the matchmarks placed before disassembly.

(c) Install the inboard joint tulip to the drive shaft.

(d) Install the boot to the inboard joint tulip.

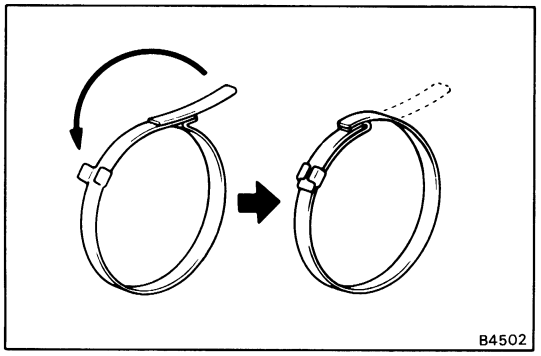

5. ASSEMBLE NEW BOOT CLAMPS TO BOTH BOOTS

(a) Be sure the boot is on the shaft groove.

(b) Using a screwdriver, bend the band and lock it as shown in the illustration.

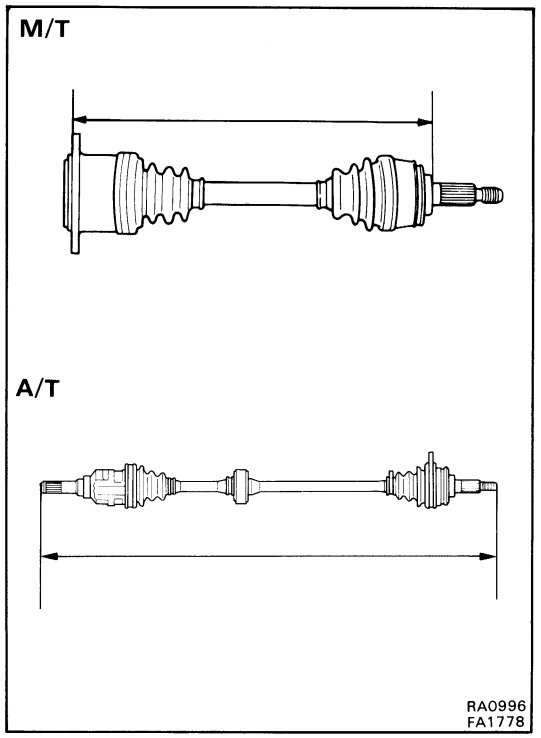

(c) Insure that the boot is not stretched or contracted when the drive shaft is at standard length.

Drive shaft length:

LH	**M/T**	**434.2 – 444.2 mm (17.09 – 17.49 in.)**
	A/T	**536.3 – 546.3 mm (21.11 – 21.51 in.)**
RH	**M/T**	**679.9 – 689.9 mm (26.77 – 27.16 in.)**
	A/T	**814.2 – 824.2 mm (32.06 – 32.45 in.)**

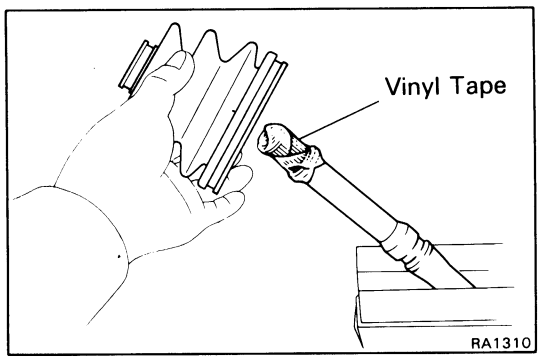

(4A-GZE)

1. TEMPORARILY INSTALL BOOTS AND NEW BOOT CLAMPS

NOTE: Before installing the boot, wrap vinyl tape around the spline of the shaft to prevent damaging the boot.

(a) Temporarily install the boot and a new clamp to the outboard joint.

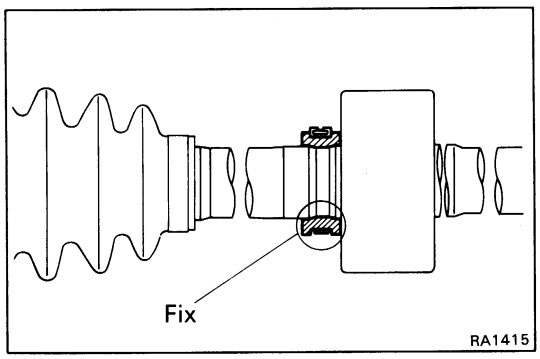

(b) Install the drive shaft damper and a new clamp. (RH shaft only)

NOTE: As shown in the illustration, fix the clamp position in line with the groove of the drive shaft.

(c) Temporarily install the boot and a new clamp (for inboard joint) to the drive shaft.

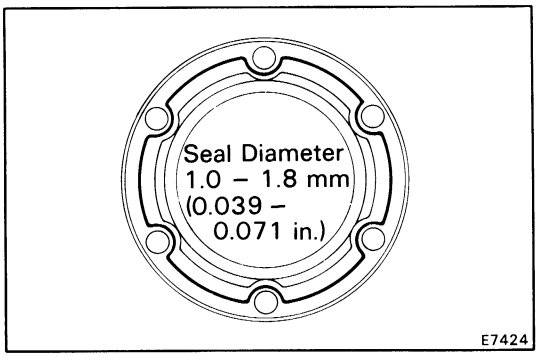

2. ASSEMBLE NEW INBOARD JOINT COVER

(a) Apply seal packing to the inboard joint cover as shown in the figure.

Sealant: Part No. 08826-00801, THREE BOND 1121 or equivalent

- Install a nozzle that has been cut to a 1mm (0.04 in.) opening.

NOTE: Avoid applying an excess amount to the surface.

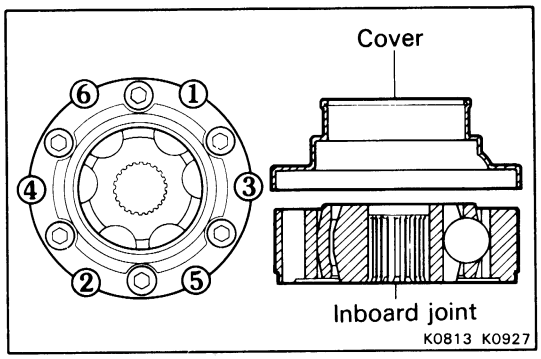

(b) Align the bolt holes of the cover with those of the inboard joint, then insert the hexagon bolts.

(c) Using a plastic hammer to tap the rim of the inboard joint cover into place. Do this in the order shown, and repeat several times.

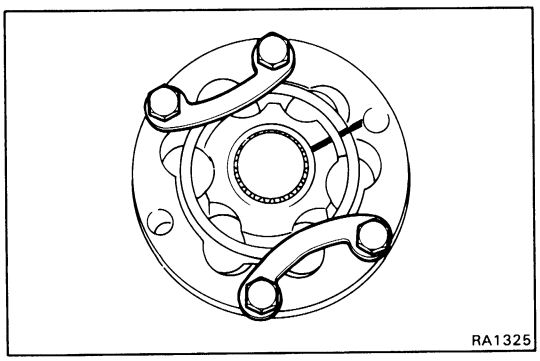

(d) Use bolts, nut and washers to keep the inboard joint together.

CAUTION: Tighten the bolts by hand to avoid scratching the flange surface.

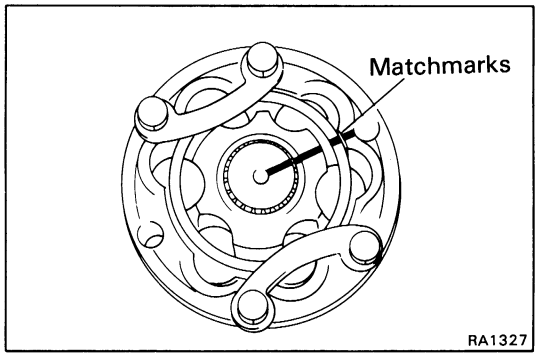

3. ASSEMBLE INBOARD JOINT

(a) Align the matchmarks placed before disassembly.

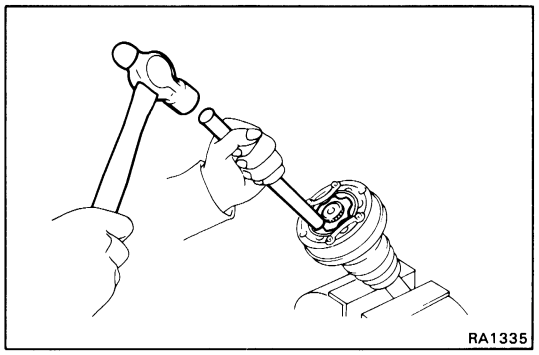

(b) Using a brass bar and hammer, tap the inboard joint onto the drive shaft.

CAUTION: Make sure that the brass bar is touching the inner race, and not the cage.

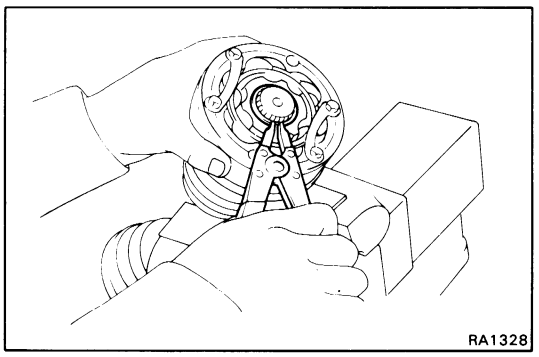

(c) Using snap ring pliers, install a new snap ring.

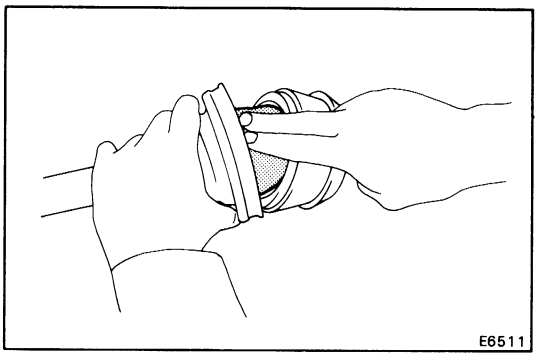

4. ASSEMBLE BOOT TO OUTBOARD JOINT

Before assembling the boot, pack in grease.

Grease capacity: 120 – 130 g (0.26 – 0.29 lb)

NOTE: Use the grease (black) supplied in the boot kit.

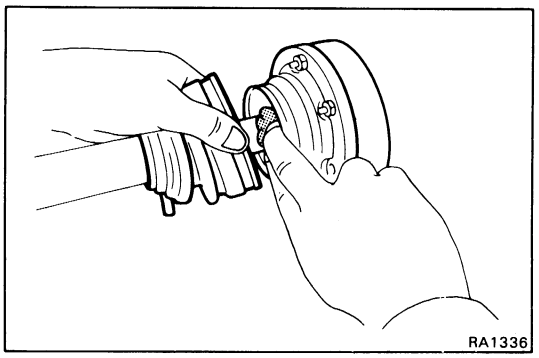

5. ASSEMBLE BOOT TO INBOARD JOINT

Before assembling the boot, pack in grease.

Grease capacity: 90 – 100 g (0.20 – 0.22 lb)

NOTE: Use the grease (black) supplied in the boot kit.

Supply of grease only is also available.

Part No. 90999-94028

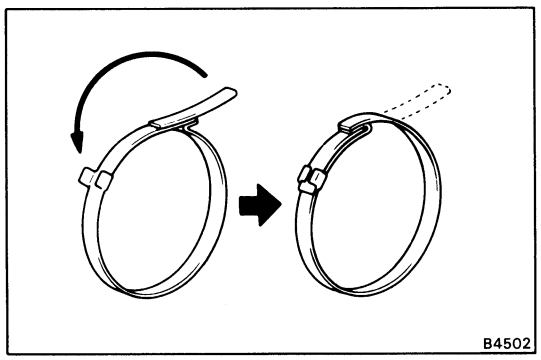

6. ASSEMBLE NEW BOOT CLAMPS TO BOTH BOOTS

(a) Be sure the boot is on the shaft groove.

(b) Bend the band and lock it as shown in the figure.

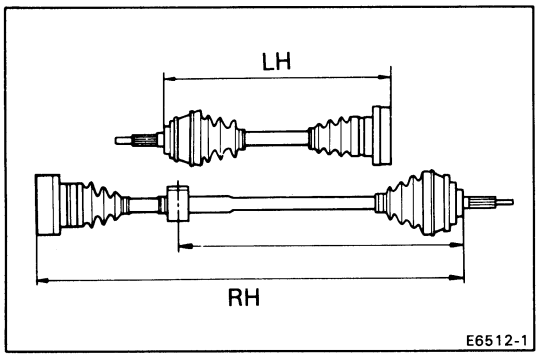

(c) Insure that the boot is not stretched or contracted when the drive shaft is at standard length.

Drive shaft length:

LH	**M/T**	**382.2 – 392.2 mm (15.05 – 15.44 in.)**
	A/T	**410.9 – 420.9 mm (16.18 – 16.57 in.)**
RH	**M/T**	**680.6 – 690.6 mm (26.80 – 27.19 in.)**
	A/T	**699.4 – 709.4 mm (27.54 – 27.93 in.)**

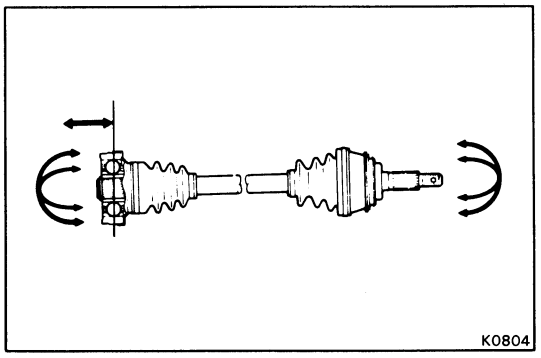

7. CHECK DRIVE SHAFT

(a) Check to see that there is no play in the inboard and outboard joint.

(b) Check to see that the inboard joint slides smoothly in the thrust direction.

(c) Check to see that there is no play in the radial direction of the inboard joint.

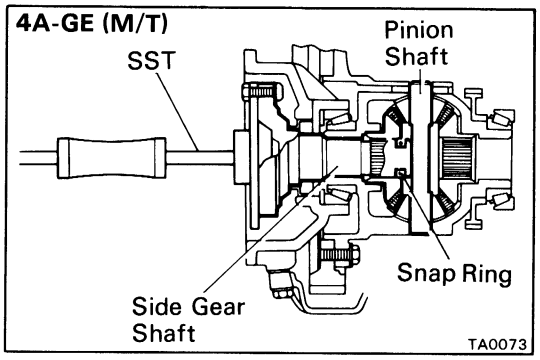

INSTALLATION OF REAR DRIVE SHAFT

1. **(4A-GE (M/T), 4A-GZE)**
INSTALL SIDE GEAR SHAFT

(a) Insure that a new snap ring is positioned securely in the groove of the side gear shaft.

(4A-GE)

(b) Using SST, drive in the side gear shaft until it makes contact with the pinion shaft.

SST 09520-32012

NOTE: Whether or not the side gear shaft making contact with the pinion shaft can be known by the sound or feeling when driving it in.

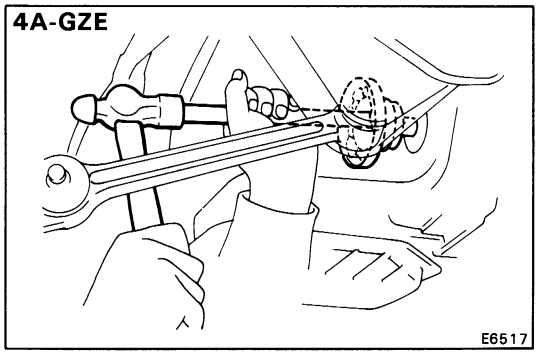

(4A-GZE)

(b) Using a brass bar and hammer, drive in the side gear shaft until it makes contact with the pinion shaft.

NOTE: Whether or not the side gear shaft making contact with the pinion shaft can be known by the sound or feeling when driving it in.

2. **(4A-GE (M/T), 4A-GZE)**
CHECK INSTALLATION OF SIDE GEAR SHAFT

(a) Check that there is 2 – 3 mm (0.08 – 0.12 in.) of play in axial direction.

(b) Check that the side gear shaft will not come out by trying to pull it completely out by hand.

(c) Push the side gear shaft to the differential and measure the distance between the side gear shaft and the transaxle case. Check that the distance between the two is the same as the measurement taken before removing the side gear shaft.

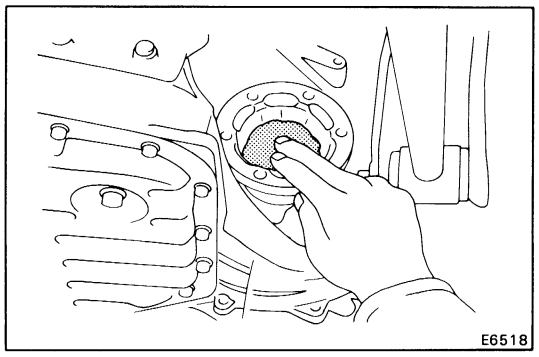

3. **(4A-GZE)**
PACK IN GREASE TO SIDE GEAR SHAFT

Pack in grease to the side gear shaft.

Grease capacity: 43 – 53 g (0.09 – 0.12 lb)

NOTE: Use the grease (black) supplied in the boot kit.

Supply of grease only is also available.

Part No. 90999-94029

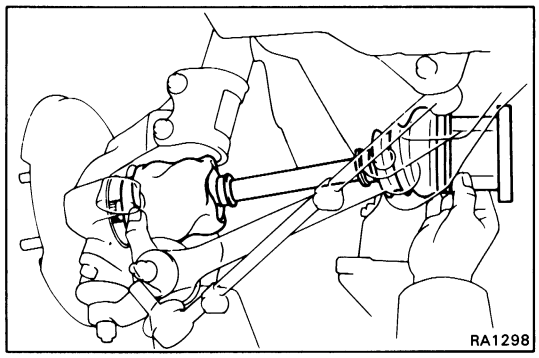

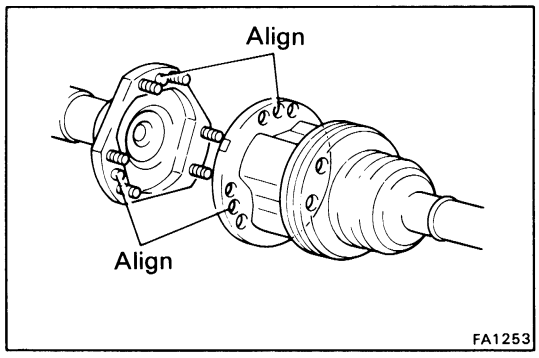

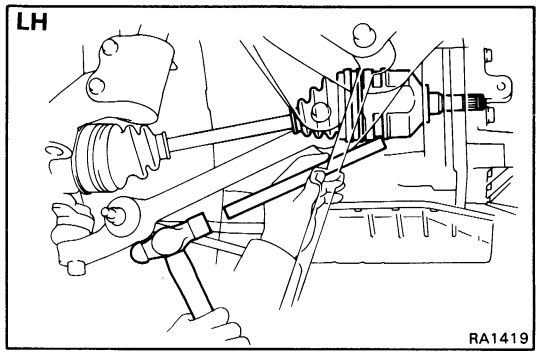

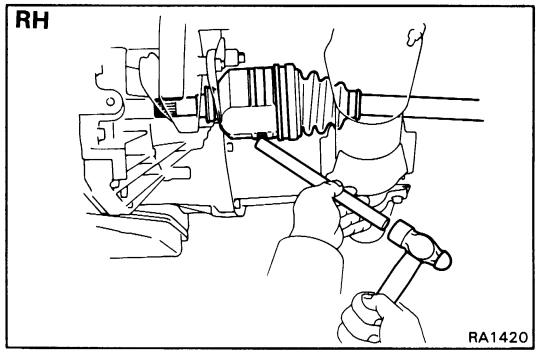

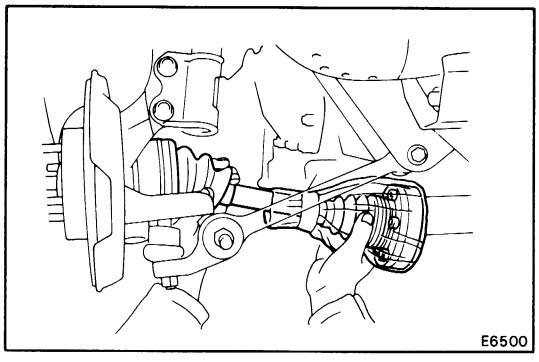

4. INSTALL REAR DRIVE SHAFT
(4A-GE (M/T))

(a) Install the outboard joint side of the drive shaft to the axle hub.

CAUTION: Be careful not to damage the boot and oil seal.

(b) Align the knock pins of the side gear with the knock pin holes of the drive shaft.

(c) Finger tighten the six nuts holding the drive shaft to the side gear shaft.

(4A-GE (A/T))

(a) Coat MP grease to the oil seal lip.

(b) Using a brass bar and hammer, tap in the drive shaft until it makes contact with the pinion shaft.

CAUTION: Be careful not to damage the boots.

NOTE:

- Before installing the drive shaft, set the snap ring opening side facing downward.
- Whether or not the drive shaft is making contact with the pinion shaft can be known by the sound or feeling when driving it in.

(c) Install the outboard joint side of the drive shaft to the axle hub.

CAUTION: Be careful not to damage the boots.

(4A-GZE)

(a) Install the outboard joint side of the drive shaft to the axle hub.

CAUTION: Be careful not to damage the boot and oil seal.

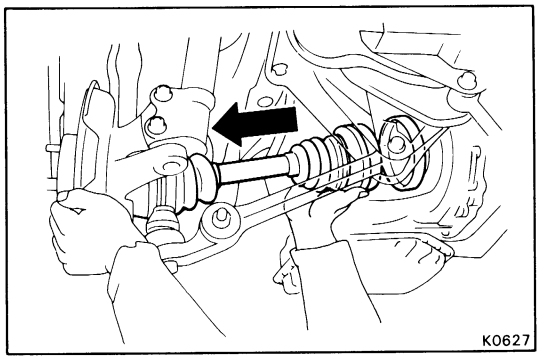

(b) Push the rear axle carrier towards the outside vehicle and lift up the inboard joint.

CAUTION: When moving the drive shaft, do not compress the boot.

(c) Remove the vinyl bag, boots, nuts and washers from the inboard joint.

(d) Place the new gasket on the inboard joint.

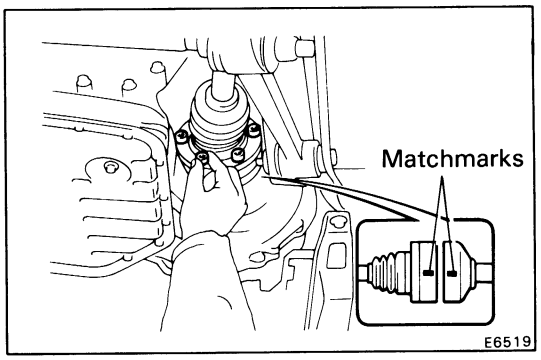

(e) Align the matchmarks on the side gear shaft and inboard joint.

(f) Finger tighten the six hexagon bolts and the three washers holding the drive shaft to the side gear shaft.

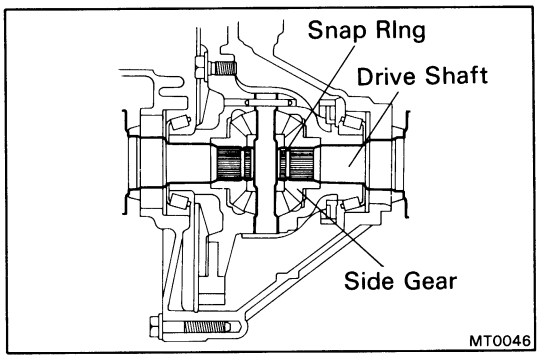

5. (4A-GE (A/T))
CHECK INSTALLATION OF REAR DRIVE SHAFT

(a) Check that there is 2 – 3 mm (0.08 – 0.12 in.) of play in axial direction.

(b) Check that the drive shaft will not come out by trying to pull it completely out by hand.

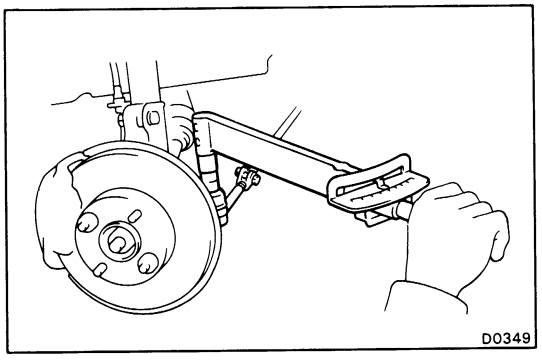

6. CONNECT SUSPENSION ARM

(a) Connect the suspension arm to the rear axle carrier with the nut.

Torque: 500 kg-cm (36 ft-lb, 49 N·m)

(b) Install a new cotter pin.

NOTE: If the cotter pin hole does not line up, correct by tightening the nut by the smallest amount possible.

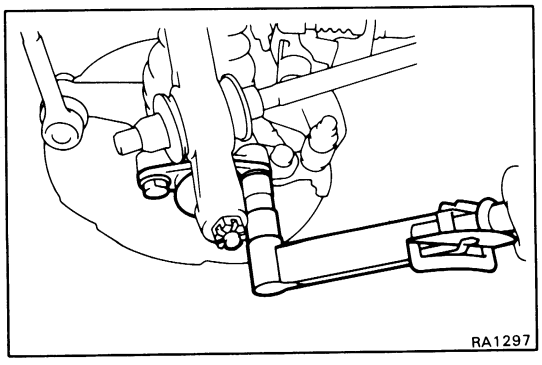

7. CONNECT LOWER ARM TO REAR AXLE CARRIER

Torque: 1,150 kg-cm (83 ft-lb, 113 N·m)

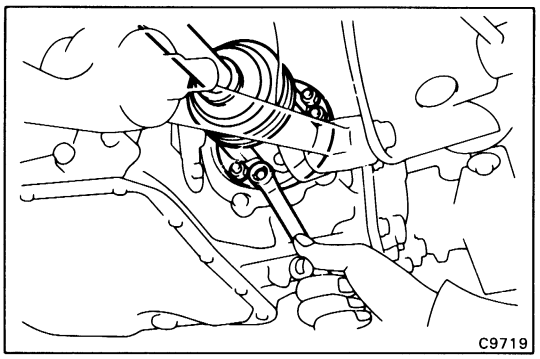

8. (4A-GE (M/T))

TIGHTEN INBOARD JOINT HOLDING SIX NUTS

Torque the six nuts while depressing the brake pedal.

Torque: 370 kg-cm (27 ft-lb, 36 N·m)

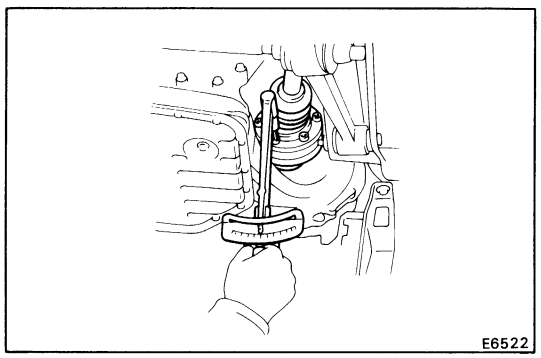

9. (4A-GZE)

TIGHTEN INBOARD JOINT HOLDING SIX HEXAGON BOLTS

Using SST, torque the six hexagon bolts while depressing the brake pedal.

SST 09043-88010

Torque: 660 kg-cm (48 ft-lb, 65 N·m)

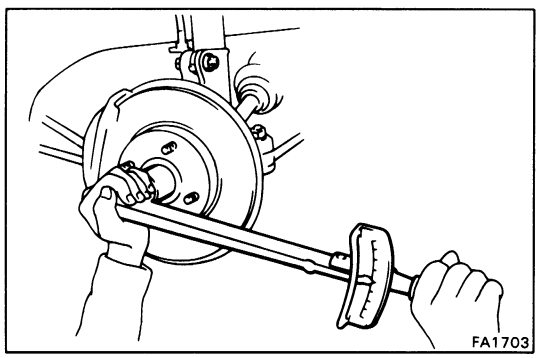

10. INSTALL BEARING LOCK NUT, LOCK NUT CAP AND NEW COTTER PIN

(a) Torque the bearing lock nut while depressing the brake pedal.

Torque: 1,900 kg-cm (137 ft-lb, 186 N·m)

(b) Install the lock nut cap and, using pliers, install a new cotter pin.

11. FILL TRANSAXLE WITH GEAR OIL OR FLUID

M/T Oil grade API GL-4 or 5
Viscosity SAE 75W-90 or 80W-90
Capacity
C52/4A-GE 2.6 liters (2.7 US qts, 2.3 Imp. qts)
E51/4A-GZE 4.2 liters (4.4 US qts, 3.7 Imp. qts)

A/T Fluid ATF DEXRON® II
Capacity (Drain and refill) (Reference)
3.1 liters (3.3 US qts, 2.7 Imp. qts)

12. INSPECT REAR WHEEL ALIGNMENT
(See page RA-3)

REAR SUSPENSION

COMPONENTS

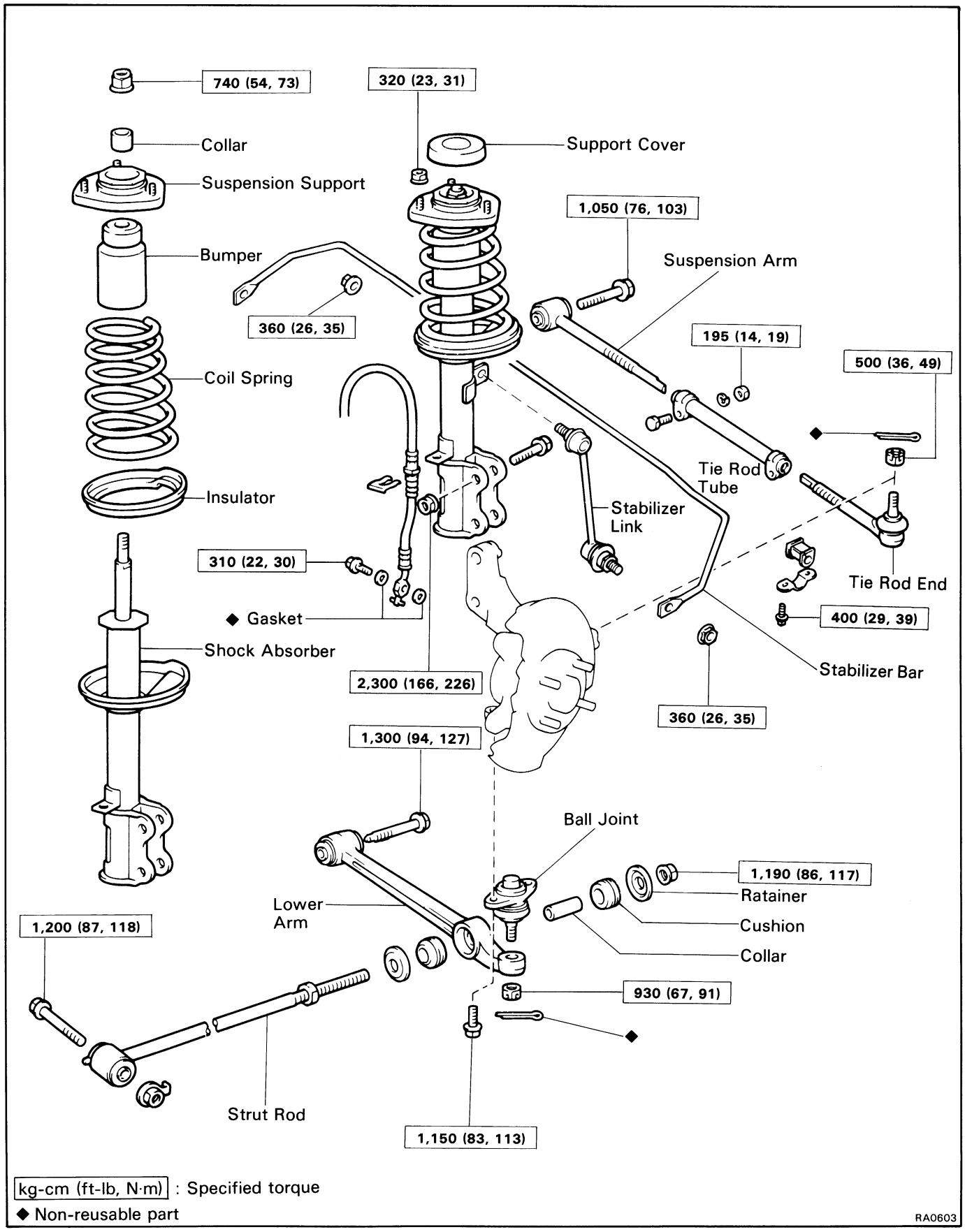

kg-cm (ft-lb, N·m) : Specified torque

◆ Non-reusable part

RA0603

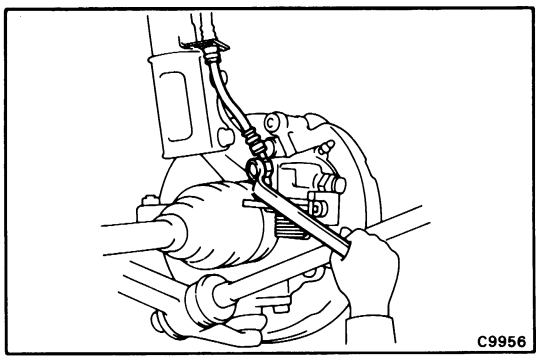

Rear Shock Absorber

(See page RA-35)

REMOVAL OF REAR SHOCK ABSORBER

1. DISCONNECT BRAKE HOSE

(a) Remove the union bolt and two gaskets and disconnect the brake hose.

(b) Drain the brake fluid into a container.

(c) Remove the clip, and brake hose from the shock absorber.

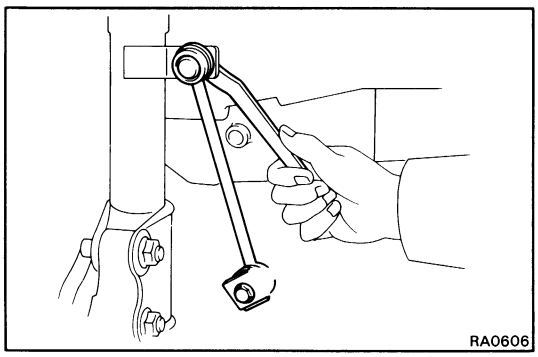

2. DISCONNECT STABILIZER LINK

Disconnect the stabilizer link from the shock absorber assembly.

NOTE: If the ball joint stud turns together with the nut, use a hexagon wrench to hold the stud.

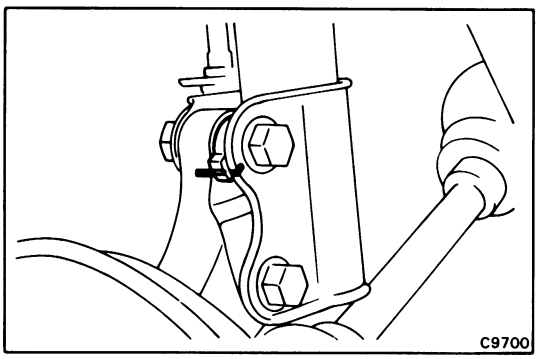

3. DISCONNECT REAR AXLE CARRIER

(a) Place the matchmarks on the shock absorber lower bracket and camber adjust cam.

(b) Remove the two axle carrier set nuts and bolts with camber adjusting cam.

4. REMOVE ENGINE HOOD SIDE PANEL

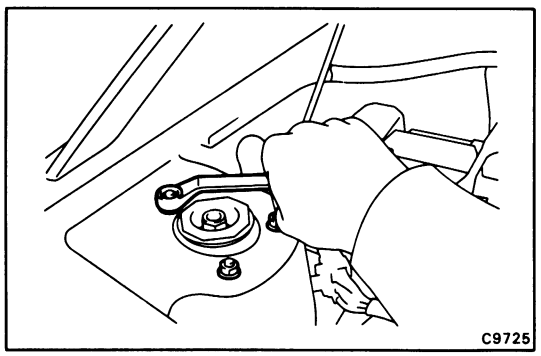

5. REMOVE SHOCK ABSORBER

(a) Remove the three suspension holding nuts.

(b) Remove the shock absorber.

CAUTION: Cover the drive shaft boot with cloth to avoid damaging it.

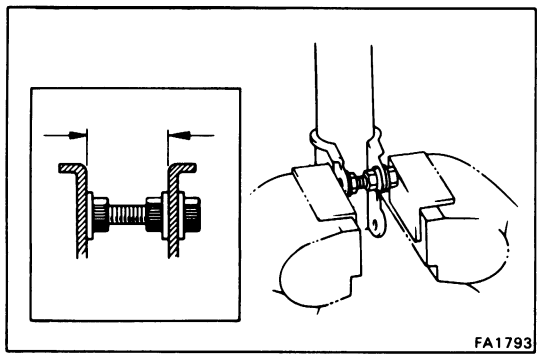

DISASSEMBLY OF REAR SHOCK ABSORBER

1. CLAMP SHOCK ABSORBER IN VISE

Install a bolt and two nuts to the bracket at the lower portion of the shock absorber shell and secure it in a vise.

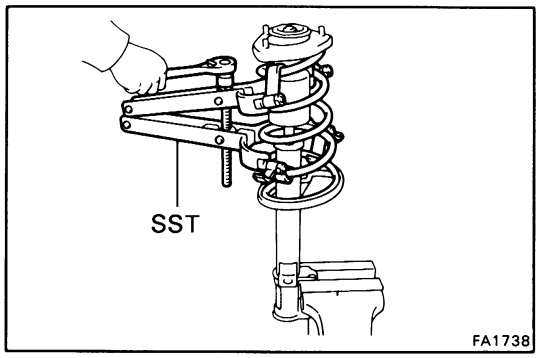

2. REMOVE COIL SPRING

(a) Using SST, compress the coil spring.

SST 09727-22032 or 09727-30020

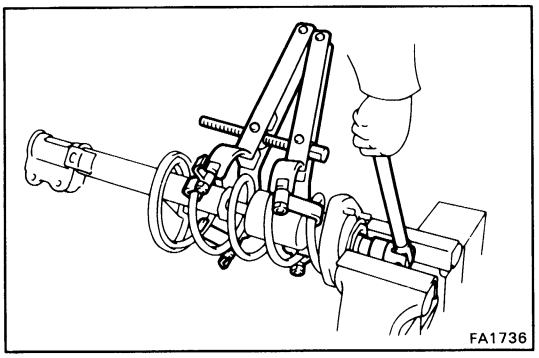

(b) Hold the octagon head of the suspension support in the vise.

(c) Remove the suspension support cover.

(d) Remove the suspension support nut.

(e) Remove the suspension support, coil spring, insulator and bumper.

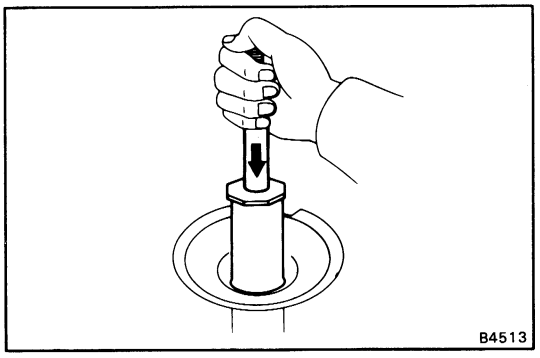

3. INSPECT OPERATION OF SHOCK ABSORBER

(a) While pushing the piston rod, check that the pull throughout the stroke is even, and that there is no abnormal resistance or noise.

(b) Push the piston rod in fully and release it. Check that it returns at a constant speed.

If the absorber operation is defective, replace the absorber, as an assembly.

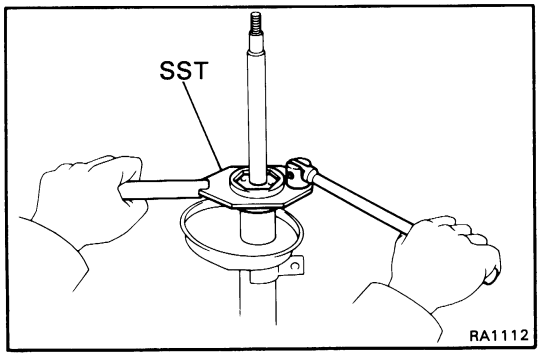

CAUTION: Before discarding the shock absorber, first loosen the ring nut 2 or 3 turns with SST to completely release the gas.

SST 09720-00011 (09721-00071)

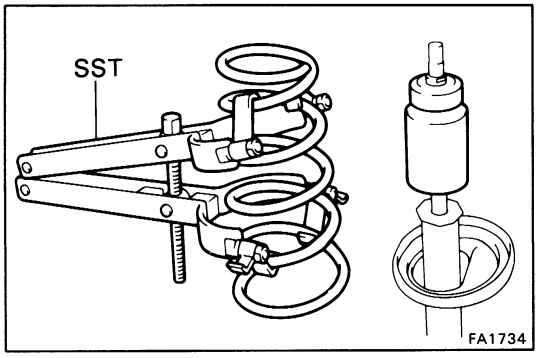

ASSEMBLY OF REAR SHOCK ABSORBER

(See page RA-35)

INSTALL COIL SPRING

(a) Install the bumper to piston rod.

(b) Using SST, compress the coil spring.

SST 09727-22032 or 09727-30020

(c) Install the lower insulator.

(d) Align the coil spring end with the lower seat hollow and install.

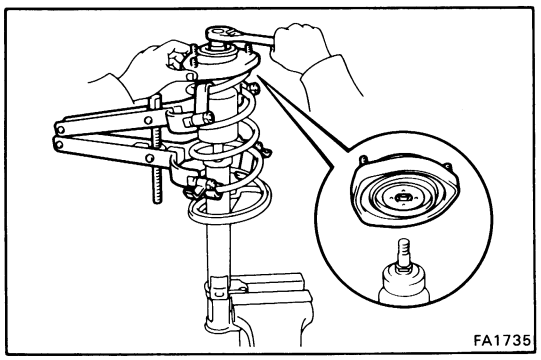

(e) Install the suspension support to piston rod.

NOTE: Align the piston rod notch and the suspension support hole.

(f) Temporarily install a new suspension support nut.

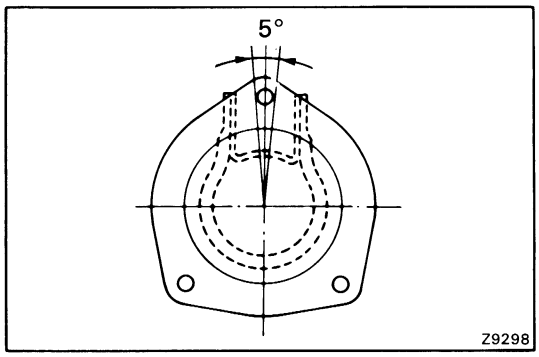

(g) Align the suspension support with the shock absorber's lower bracket as shown.

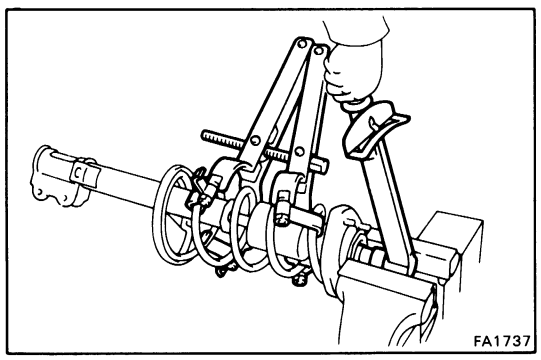

(h) Hold the octagon head of suspension support in the vise.

(i) Torque the suspension support nut.

Torque: 740 kg-cm (54 ft-lb, 73 N·m)

(j) Install the suspension support cover.

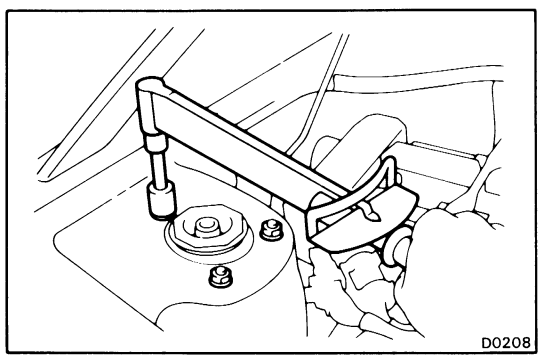

INSTALLATION OF REAR SHOCK ABSORBER

1. INSTALL SHOCK ABSORBER

Install the three nuts holding the shock absorber to the body. Torque the nuts.

Torque: 320 kg-cm (23 ft-lb, 31 N·m)

CAUTION: Be careful not to damage the drive shaft boot.

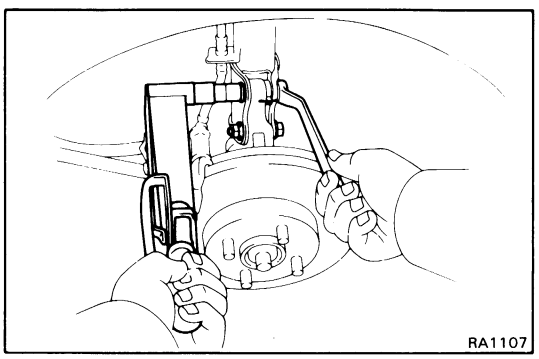

2. INSTALL ENGINE HOOD SIDE PANEL

3. INSTALL REAR AXLE CARRIER TO SHOCK ABSORBER

(a) Connect the axle carrier to the shock absorber's lower bracket.

(b) Insert the bolts from the rear side and align the matchmarks of the camber adjusting cam.

(c) Torque the nuts.

Torque: 2,300 kg-cm (166 ft-lb, 226 N·m)

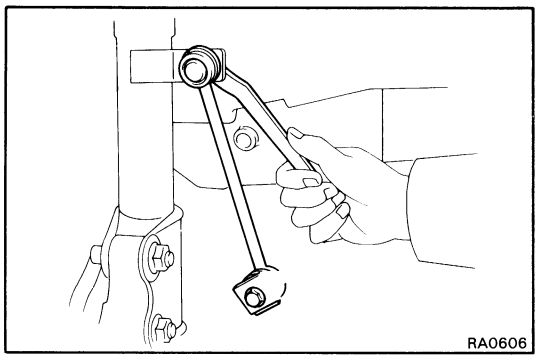

4. CONNECT STABILIZER LINK

Connect the stabilizer link to the shock absorber assembly.

Torque: 360 kg-cm (26 ft-lb, 35 N·m)

NOTE: If the ball joint stud turns together with the nut, use a hexagon wrench to hold the stub.

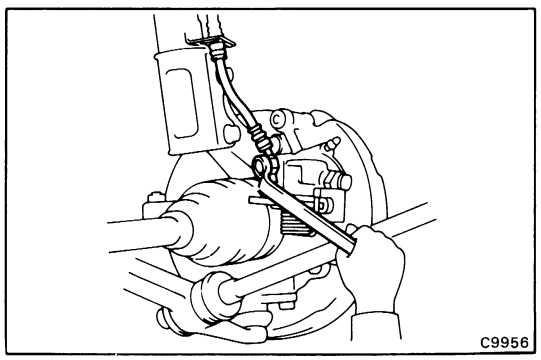

5. CONNECT BRAKE HOSE

(a) Install the brake hose and clip to the shock absorber.

(b) Install the union bolt and new gaskets and torque the union bolt.

Torque: 310 kg-cm (22 ft-lb, 30 N·m)

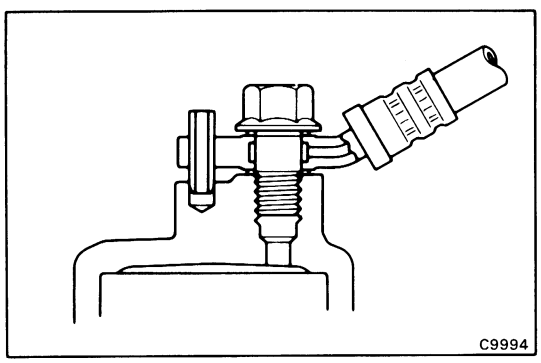

(c) Check whether the brake hose fastener is actually fastened to the brake cylinder.

6. BLEED BRAKE LINE (See page BR-6)

7. INSPECT REAR WHEEL ALIGNMENT (See page RA-3)

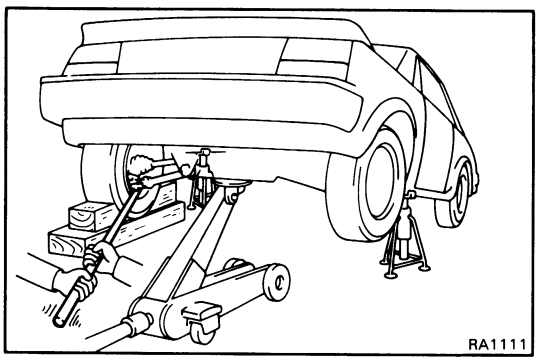

Ball Joint

(See page RA-35)

INSPECTION AND REMOVAL OF BALL JOINT

1. INSPECT BALL JOINT FOR EXCESSIVE LOOSENESS

(a) Jack up the rear of the vehicle and place wooden blocks with a height of 180 – 200 mm (7.09 – 7.87 in.) under one rear tire.

(b) Lower the jack until there is about half a load on the front coil spring. Place stands under the vehicle for safety.

(c) Move the lower arm up and down and check that the ball joint has no play.

Ball joint vertical play: 0 mm (0 in.)

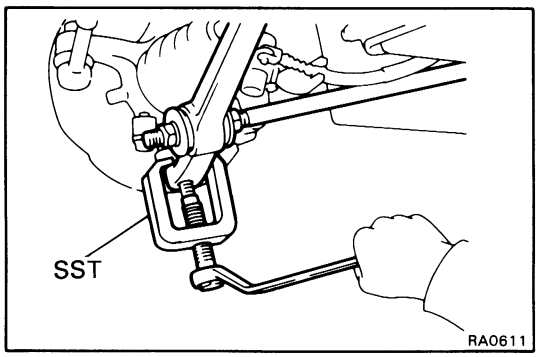

2. REMOVE BALL JOINT

(a) Remove the cotter pin and nut from the lower arm.

(b) Using SST, disconnect the ball joint from the lower arm.

SST 09610-55012

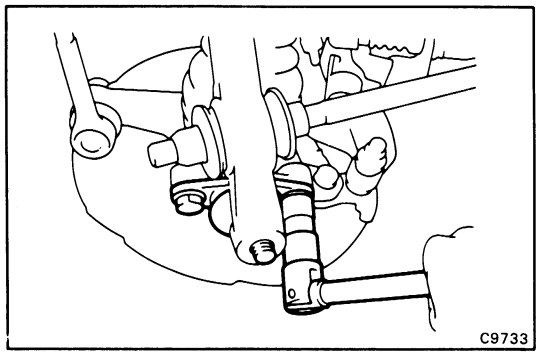

(c) Remove the two bolts holding the rear axle carrier to the ball joint.

(d) Lower the lower arm and remove the ball joint.

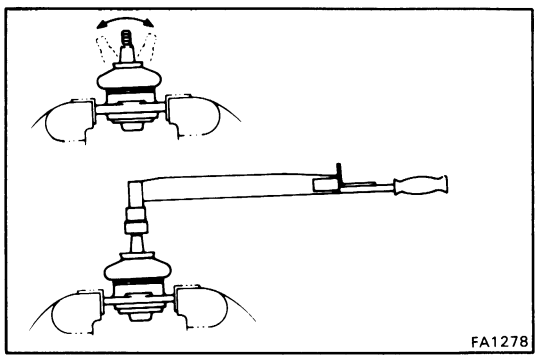

3. INSPECT BALL JOINT FOR ROTATION CONDITION

(a) Flip the ball joint stud back and forth 5 times as shown in the figure, before installing the nut.

(b) Using a torque gauge, turn the nut continuously one turn every 2-4 seconds and take the torque reading on the fifth turn.

Torque (turning): 10 – 30 kg-cm (9 – 26 in.-lb, 1.0 – 2.9 N·m)

If not within specification, replace the ball joint.

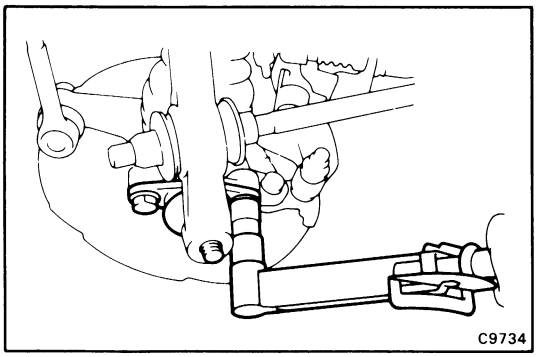

INSTALLATION OF BALL JOINT

1. INSTALL BALL JOINT TO REAR AXLE CARRIER

Torque: 1,150 kg-cm (83 ft-lb, 113 N·m)

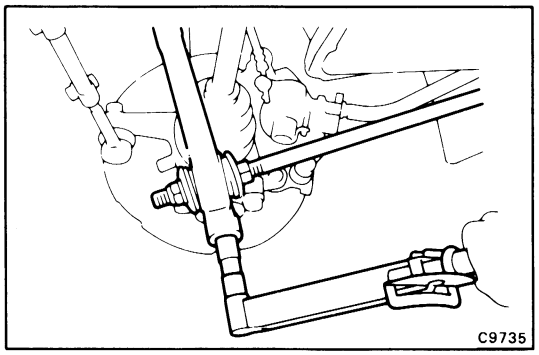

2. CONNECT LOWER ARM

(a) Connect the lower arm to the ball joint with the nut.

(b) Torque the nut.

Torque: 930 kg-cm (67 ft-lb, 91 N·m)

(c) Install a new cotter pin.

NOTE: If the cotter pin hole does not line up, correct by tightening the nut by the smallest amount possible.

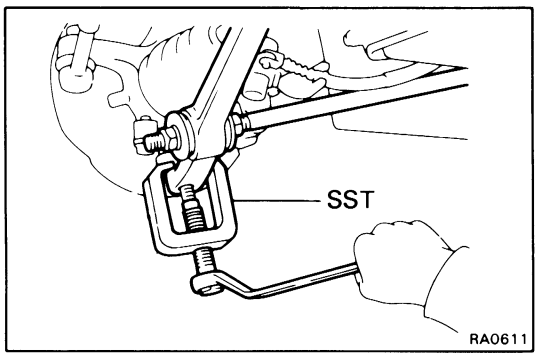

Lower Arm

(See page RA-35)

REMOVAL OF LOWER ARM

1. DISCONNECT LOWER ARM FROM BALL JOINT

(a) Remove the cotter pin and nut.

(b) Using SST, disconnect the lower arm from the ball joint.

SST 09610-55012

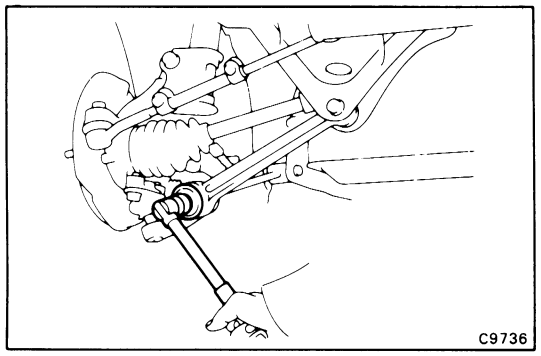

2. REMOVE STRUT ROD NUT AND RETAINER

Remove the strut rod nut and retainer from the lower arm.

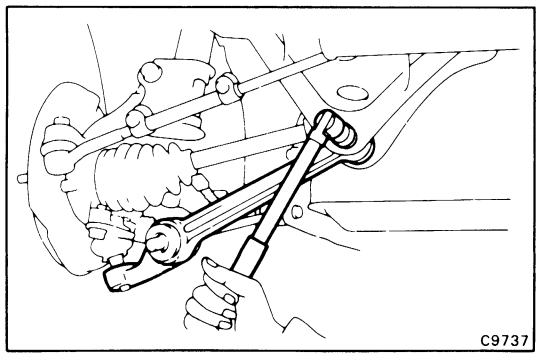

3. REMOVE LOWER ARM

(a) Remove the bolt holding the lower arm to the body, and remove the cushion and lower arm from the strud rod.

(b) Remove the cushion, collar and retainer from the strud rod.

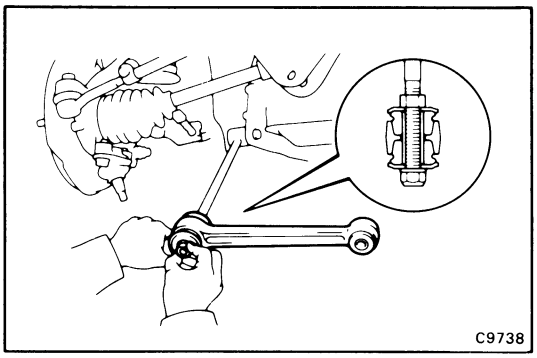

INSTALLATION OF LOWER ARM

1. INSTALL LOWER ARM

(a) Install the strut rod retainer, cushion and collar.

(b) Connect the lower arm to the strut rod.

(c) Temporarily install the strut rod nut with the cushion and retainer.

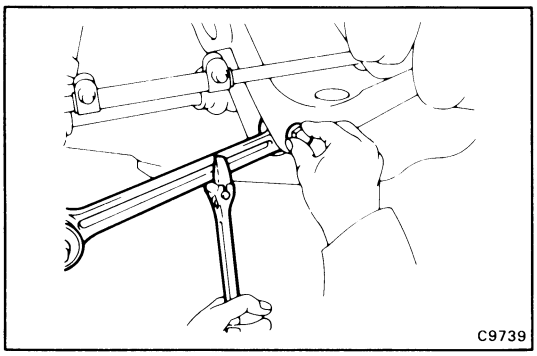

(d) Install the lower arm to the body. Do not torque the bolt.

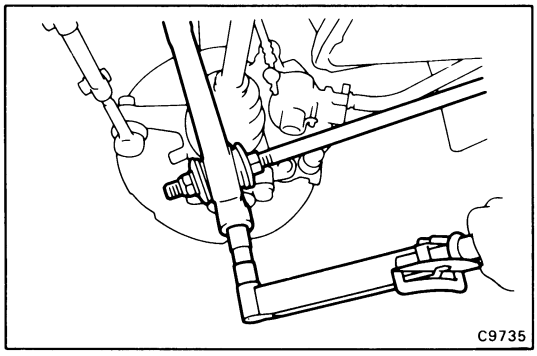

2. CONNECT LOWER ARM TO BALL JOINT

(a) Connect the lower arm to the ball joint with the nut.

(b) Torque the nut.

Torque: 930 kg-cm (67 ft-lb, 91 N·m)

(c) Install a new cotter pin.

NOTE: If the cotter pin hole does not line up, correct by tighten the nut by the smallest amount possible.

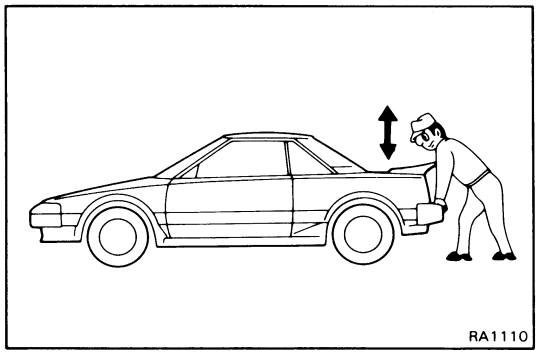

3. INSTALL WHEEL AND LOWER VEHICLE

Rock the vehicle up and down to stabilize the suspension.

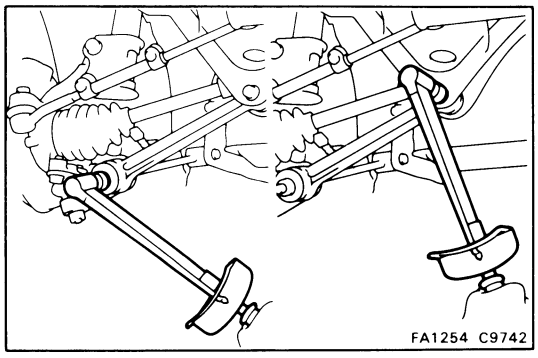

4. TORQUE LOWER ARM

(a) Torque the strut rod nut.

Torque: 1,190 kg-cm (86 ft-lb, 117 N·m)

(b) Torque the lower arm holding bolt (body).

Torque: 1,300 kg-cm (94 ft-lb, 127 N·m)

5. INSPECT REAR WHEEL ALIGNMENT
(See page RA-3)

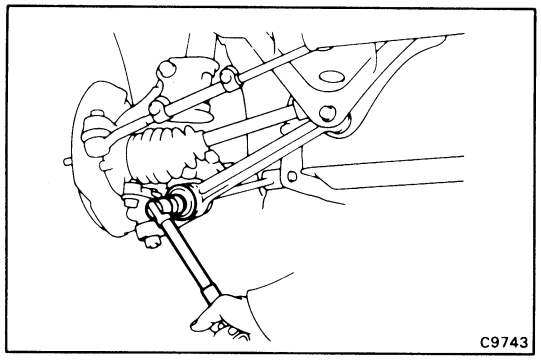

Strut Rod

(See page RA-35)

REMOVAL OF STRUT ROD

1. REMOVE STRUT ROD NUT AND RETAINER

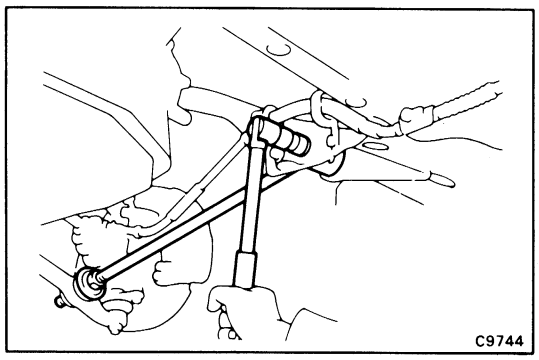

2. REMOVE STRUT ROD

(a) Remove the bolt and nut holding the strut rod with the body, and remove the cushion and strut rod from the lower arm.

(b) Remove the cushion, collar and retainer from the strut rod.

INSTALLATION OF STRUT ROD

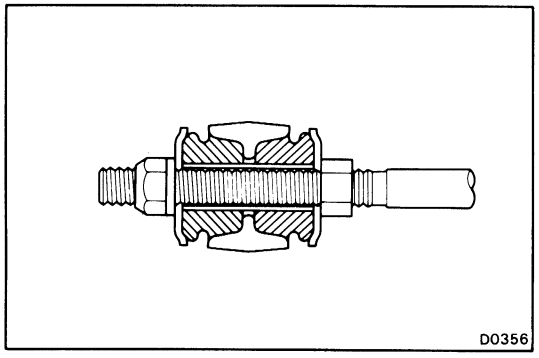

1. INSTALL STRUT ROD

(a) Install the retainer, collar and cushion to the strut rod (lower arm side).

(b) Temporarily install the strut rod to the lower arm.

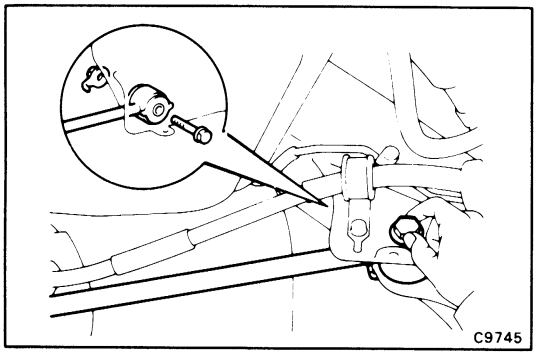

(c) Temporarily install the bolt and nut holding the strut rod to the body.

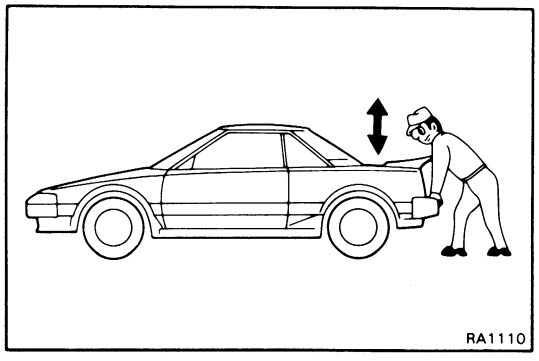

2. INSTALL WHEEL AND LOWER VEHICLE

Rock the vehicle up and down to stabilize the suspension.

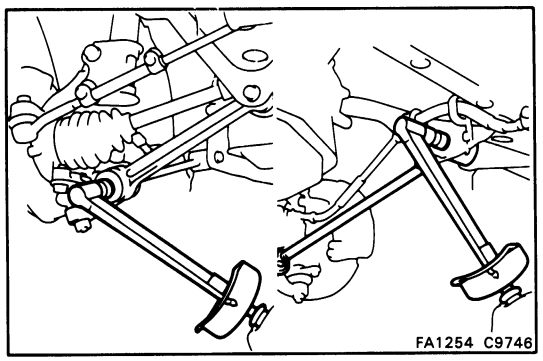

3. TIGHTEN STRUT ROD HOLDING NUT

Torque:

Lower arm side	**1,190 kg-cm (86 ft-lb, 117 N·m)**
Body side	**1,200 kg-cm (87 ft-lb, 118 N·m)**

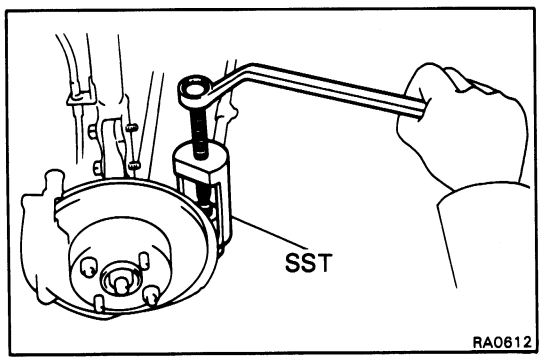

Suspension Arm

(See page RA-35)

REMOVAL OF SUSPENSION ARM

1. DISCONNECT SUSPENSION ARM

(a) Remove the cotter pin and nut.

(b) Using SST, disconnect the suspension arm from the rear axle carrier.

SST 09610-20012

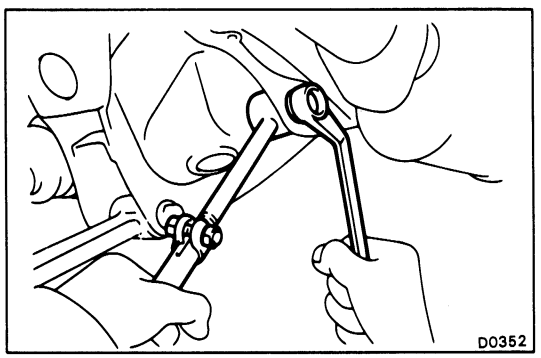

2. REMOVE SUSPENSION ARM FROM BODY

Remove the suspension arm holding nut from the body.

DISASSEMBLY OF SUSPENSION ARM

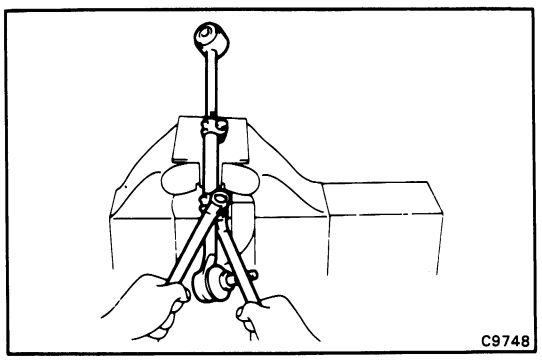

1. REMOVE TIE ROD END AND SUSPENSION ARM FROM TIE ROD TUBE

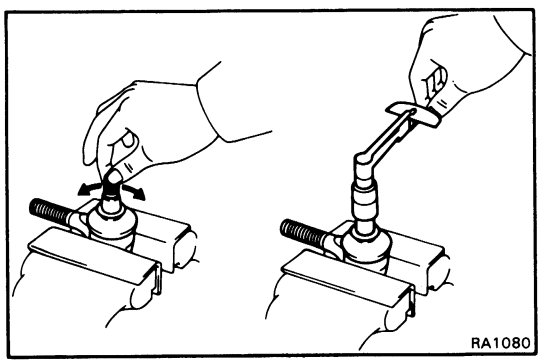

2. INSPECT BALL JOINT FOR ROTATION CONDITION

(a) Flip the ball joint stud back and forth 5 times, as shown in the figure, before installing the nut.

(b) Using a torque gauge, turn the nut continuously one turn every 2-4 seconds, and take the torque reading on the fifth turn.

Torque (turning): 8.5 — 35 kg-cm (7.4 — 30 in.-lb, 0.8 — 3.4 N·m)

If not within specification, replace the ball joint.

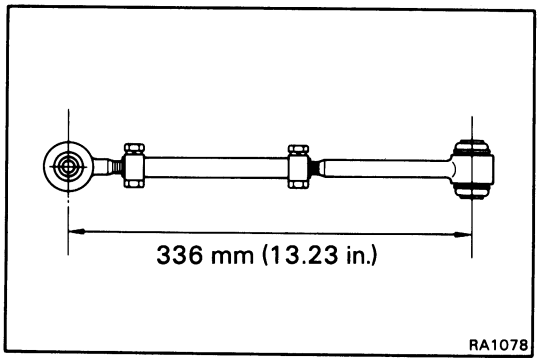

ASSEMBLY OF SUSPENSION ARM

INSTALL TIE ROD END AND SUSPENSION ARM TO TIE ROD TUBE

(a) Install the suspension arm and tie rod to the tie rod tube.

(b) Adjust the tie rod end and suspension arm to the length indicated in the figure.

NOTE: Fully tighten after rear wheel alignment.

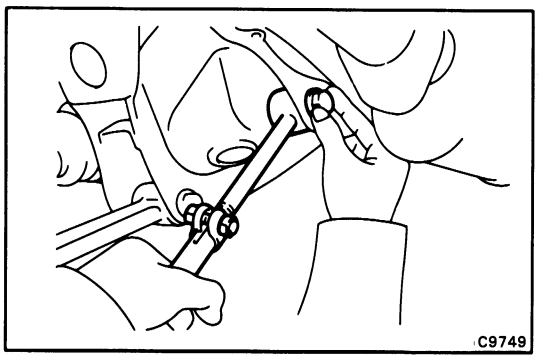

INSTALLATION OF SUSPENSION ARM

1. INSTALL SUSPENSION ARM TO BODY

Temporarily connect the suspension arm to the body with the bolt.

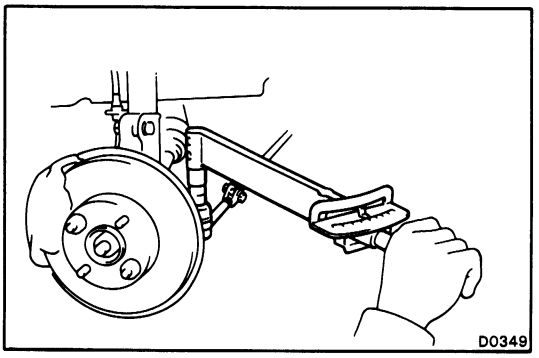

2. INSTALL SUSPENSION ARM TO REAR AXLE CARRIER

(a) Install the suspension arm to the rear axle carrier with the nut.

Torque: 500 kg-cm (36 ft-lb, 49 N·m)

(b) Install a new cotter pin.

NOTE: If the cotter pin hole does not line up, correct by tightening the nut by the smallest amount possible.

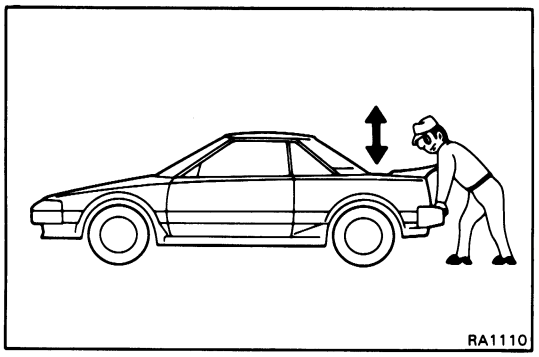

3. INSTALL WHEEL AND LOWER VEHICLE

Rock the vehicle up and down to stabilize the suspension.

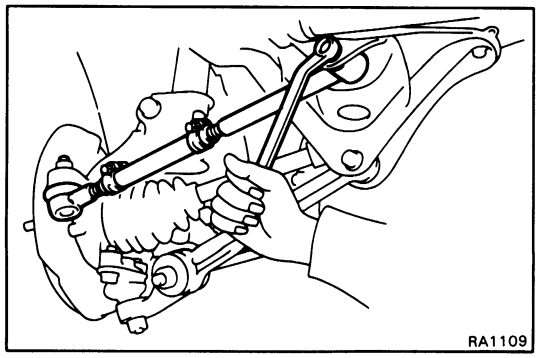

4. TIGHTEN SUSPENSION ARM HOLDING BOLT

Torque: 1,050 kg-cm (76 ft-lb, 103 N·m)

5. INSPECT REAR WHEEL ALIGNMENT

(See page RA-3)

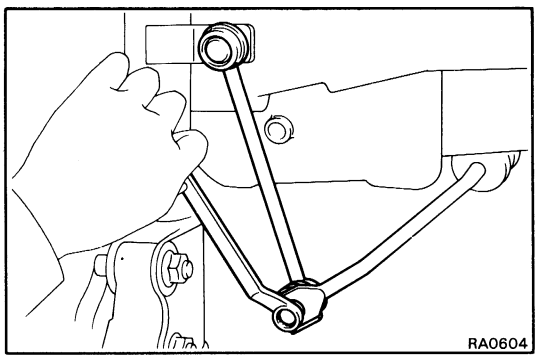

Stabilizer Bar and Link

(See page RA-35)

REMOVAL OF STABILIZER BAR AND LINK

1. DISCONNECT STABILIZER LINK FROM STABILIZER BAR

Remove the nut and disconnect the stabilizer link from stabilizer bar.

NOTE: If the ball joint stud turns together with the nut, use a hexagon wrench to hold the stud.

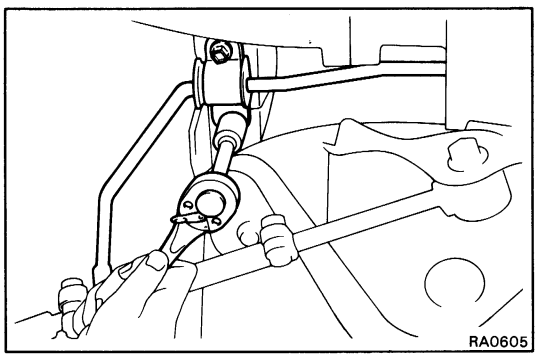

2. REMOVE STABILIZER BAR FROM BODY

Remove the bolts and stabilizer with brackets.

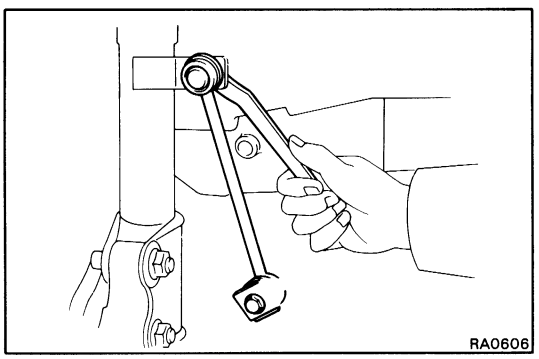

3. REMOVE STABILIZER LINK FROM REAR SHOCK ABSORBER ASSEMBLY

Remove the nut and stabilizer link.

4. REMOVE STABILIZER BRACKET AND STABILIZER BAR CUSHION

NOTE: If the ball joint stud turns together with the nut, use a hexagon wrench to hold the stud.

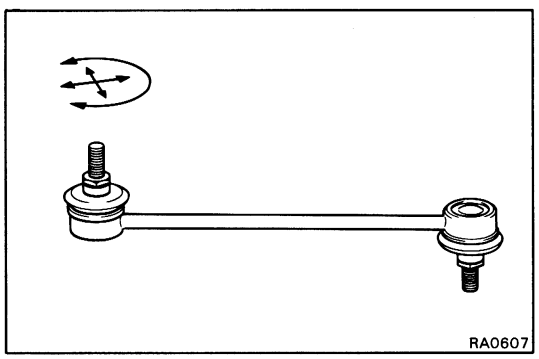

INSPECTION OF STABILIZER LINK

INSPECT STABILIZER LINK

Rotate ball joint arm in all directions.

If the movement is not smooth and free, replace the stabilizer link.

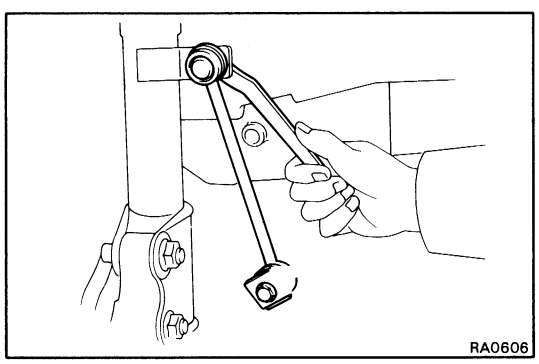

INSTALLATION OF STABILIZER BAR AND LINK

1. INSTALL STABILIZER LINK TO REAR SHOCK ABSORBER ASSEMBLY

Torque: 360 kg-cm (26 ft-lb, 35 N·m)

NOTE: If the ball joint stud turns together with the nut, use a hexagon wrench to hold the stud.

2. **INSTALL STABILIZER BAR CUSHION AND STABILIZER BRACKETS**

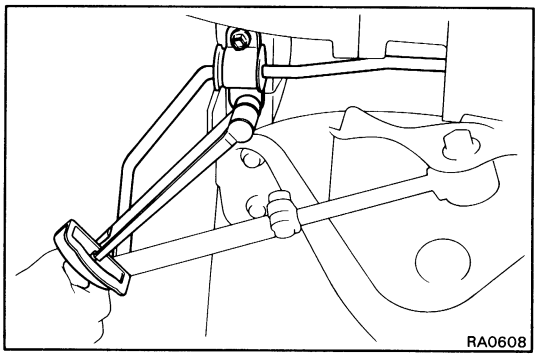

3. **INSTALL STABILIZER BAR TO BODY**

   Torque: 400 kg-cm (29 ft-lb, 39 N·m)

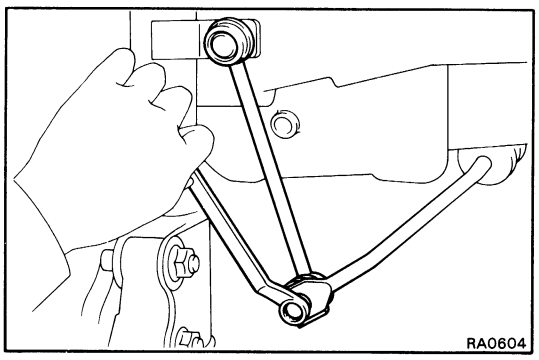

4. **CONNECT STABILIZER LINK TO STABILIZER BAR**

   Torque: 360 kg-cm (26 ft-lb, 35 N·m)

   NOTE: If the ball joint stud turns together with the nut, use a hexagon wrench to hold the stud.

BRAKE SYSTEM

	Page
PRECAUTIONS	BR-2
TROUBLESHOOTING	BR-2
CHECKS AND ADJUSTMENTS	BR-5
MASTER CYLINDER	BR-8
BRAKE BOOSTER	BR-15
FRONT BRAKE	BR-18
REAR BRAKE	BR-26
BRAKE HOSES AND TUBES	BR-40

PRECAUTIONS

1. **Care must be taken to replace each part properly as it could affect the performance of the brake system and result in a driving hazard. Replace the parts with parts of the same part number or equivalent.**

2. **It is very important to keep parts and area clean when repairing the brake system.**

TROUBLESHOOTING

Problem	Possible cause	Remedy	Page
Low or spongy pedal	Brake pads worn	Replace pads	BR-18, 26
	Leak in brake system	Repair leak	
	Master cylinder faulty	Repair or replace master cylinder	BR-8
	Air in brake system	Bleed brake system	BR-6
	Cylinder faulty	Repair cylinder	
	Piston seals worn or damaged	Repair brake calipers	BR-22, 30
	Rear brake automatic adjuster faulty	Repair or replace adjuster	
Brakes drag	Parking brake out of adjustment	Adjust parking brake	BR-7
	Binding parking brake wire	Repair as necessary	
	Booster push rod out of adjustment	Adjust push rod	BR-16
	Brake line restricted	Repair as necessary	
	Caliper piston sticking	Repair as necessary	BR-22, 30
	Automatic adjuster broken	Replace adjuster	
	Master cylinder faulty	Repair or replace master cylinder	BR-8
Brakes pull	Tires improperly inflated	Inflate tires to proper pressure	
	Oil or grease on brake pads	Check for cause, replace pads	BR-18, 26
	Disc out of round	Replace disc	BR-23, 33
	Cylinder faulty	Repair cylinder	
	Piston frozen in caliper	Repair caliper	BR-22, 30
	Disc brake pad sticking	Replace pads	BR-18, 26
Hard pedal but brakes inefficient	Oil or grease on brake pads	Check for cause, replace pads	BR-18, 26
	Disc brake pads worn	Replace pads	BR-18, 26
	Piston frozen in caliper	Repair caliper	BR-23, 33
	Brake booster faulty	Repair booster	BR-15
	Vacuum leaks	Repair as necessary	
	Brake line restricted	Repair as necessary	

TROUBLESHOOTING (Cont'd)

Problem	Possible cause	Remedy	Page
Snapping or clicking noise when brakes are applied	Rust on front edge of inboard shoes	Inspect, lubricate and replace if necessary	BR-18, 26
	Loose or missing pad support plate	Replace	BR-18, 26
	Loose installation bolt	Tighten	BR-18, 26
	Wear on slide bushing	Replace	BR-23, 33
Scraping or grinding noise when brakes are applied	Caliper to wheel or rotor interference	Replace as required	BR-18, 26
	Dust cover to rotor or drum interference	Correct or replace	BR-18, 26
	Other brake system components: Warped or bent brake backing plate or splash shield, cracked drums or rotors	Inspect or repair	BR-18, 26
	Tires rubbing against chassis and body	Inspect or repair	
Squeaking, squealing groaning or chattering noise when brakes are applied Note: Brake friction materials inherently generate noise and heat in order to dissipate energy. As a result, occasional squeal is normal and is aggravated by severe environmental conditions such as cold, heat, wetness, snow, salt, mud, etc. This occasional squeal is not a functional problem and does not indicate any loss of brake effectiveness	Rotor and pads worn or scored	Inspect, repair or replace	BR-18, 26
	Missing or damaged brake pad anti-squeal shim	Replace	BR-18, 26
	Burred or rusted calipers	Clean or deburr	BR-18, 26
	Maladjustment of brake pedal or booster push rod	Inspect and adjust	BR-5, 16
	Pad wear and pad wear indicator making contact with the rotor	Replace pad	BR-18, 26
	Dirty, greased, contaminated or glazed brake pads	Clean or replace pads	BR-18, 26

TROUBLESHOOTING (Cont'd)

Problem	Possible cause	Remedy	Page
Squealing and squeaking noise when brakes are not applied	Maladjustment of brake pedal or booster push rod	Inspect and adjust	BR-5, 16
	Poor return of brake booster or master cylinder or cylinder	Inspect, repair or replace	BR-8, 15
	Rusted or stuck	Inspect and lubricate as necessary	BR-18, 26
	Other brake system components: Loose or extra parts in brakes Worn, damaged or insufficiently lubricated wheel bearings	Inspect, repair and replace as required	
	Improper positioning of pad in caliper		
	Outside diameter of rotor rubbing caliper housing		
	Housing installation of disc brake pad support plate		BR-18, 26
	Pad wear and pad wear indicator making contact with the rotor	Replace	BR-18, 26
Groaning, clicking or rattling noise when brakes are not applied	Stones or foreign material trapped inside wheel covers	Remove foreign material	
	Loose wheel nuts	Tighten to correct torque Replace if stud holes are elongated	
	Loose or missing anti-rattle spring or pad support plate or crimping on outer pad	Inspect, repair or replace	BR-18, 26
	Failure of shim	Inspect and replace if necessary	BR-18, 26
	Wear on slide bushing	Inspect and replace if necessary	BR-22, 30
	Loose installation bolt	Inspect and tighten if necessary	BR-18, 26
	Maladjustment of brake pedal or booster push rod	Inspect and adjust	BR-5, 16
	Poor return of piston	Inspect and repair or replace	BR-22, 30
	Worn, damaged or dry wheel bearings	Inspect and lubricate or replace	

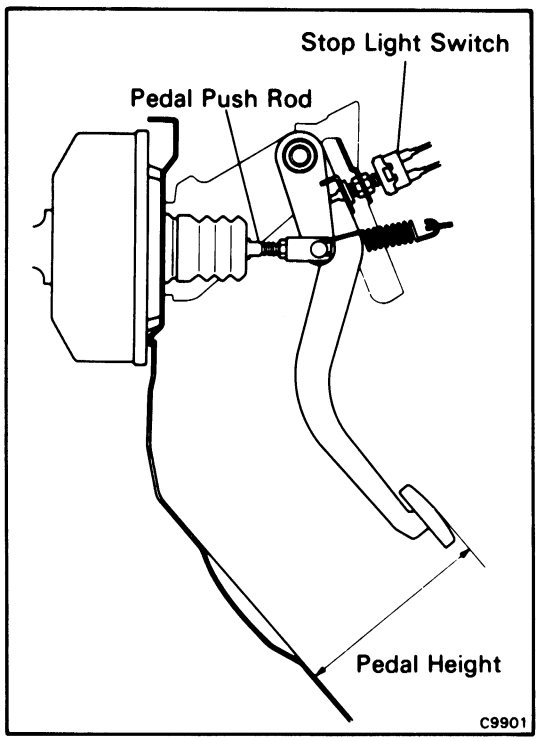

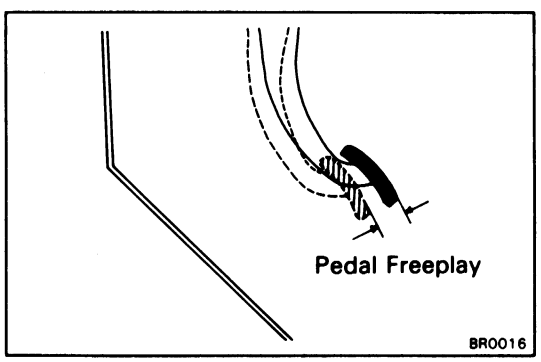

CHECKS AND ADJUSTMENTS

CHECK AND ADJUSTMENT OF BRAKE PEDAL

1. CHECK THAT PEDAL HEIGHT IS CORRECT, AS SHOWN

Pedal height from asphalt sheet: 154 – 164 mm (6.06 – 6.46 in.)

2. IF NECESSARY, ADJUST PEDAL HEIGHT

(a) If necessary, remove the instrument lower finish panel and air duct.

(b) Loosen the stop light switch lock nut.

(c) Sufficiently loosen the stop light switch.

(d) Loosen the push rod lock nut.

(e) Adjust the pedal height by turning the pedal push rod.

(f) Return the stop light switch until it lightly contacts the pedal stopper.

(g) Tighten the two lock nuts.

(h) Check that the stop lights light when the brake pedal depressed.

(i) After adjusting the pedal height, check and adjust the pedal freeplay.

3. CHECK THAT PEDAL FREEPLAY IS CORRECT, AS SHOWN

(Single type brake booster)

(a) Stop the engine and depress the brake pedal several times until there is no more vacuum left in the booster.

(b) Push in the pedal until the beginning of resistance is felt. Measure the distance, as shown.

Pedal freeplay: 3 – 6 mm (0.12 – 0.24 in.)

NOTE: The pedal freeplay is the amount of the stroke until the booster air valve is moved by the pedal push rod.

(Tandem type brake booster)

(a) Stop the engine and depress the brake pedal several times until there is no more vacuum left in the booster.

(b) Push in the pedal by hand until the beginning of the second resistance is felt, measure the distance, as shown.

Pedal freeplay: 3 – 6 mm (0.12 – 0.24 in.)

NOTE: The freeplay to the first resistance is due to the play between the clevis and pin. And it is 1 – 3 mm (0.04 – 0.12 in.) on the pedal.

4. IF NECESSARY, ADJUST PEDAL FREEPLAY

(a) If incorrect, adjust the pedal freeplay by turning the pedal push rod.

(b) Start the engine and confirm that pedal freeplay exists.

(c) After adjusting the pedal freeplay, check the pedal height.

(d) Install the air duct and instrument lower finish panel.

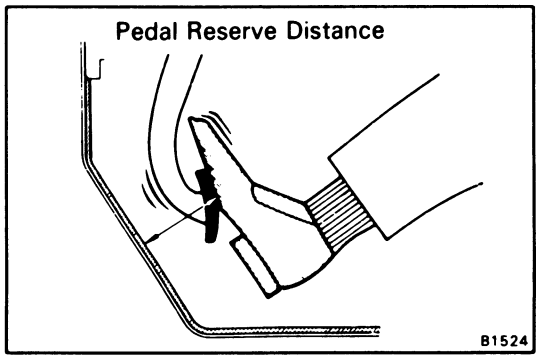

5. CHECK THAT PEDAL RESERVE DISTANCE IS CORRECT, AS SHOWN

Release the parking brake.
With engine running, depress the pedal and measure the pedal reserve distance, as shown.

Pedal reserve distance from asphalt sheet at 50 kg (110.2 lb, 490 N):
4A-GE: More than 87 mm (3.43 in.)
4A-GZE: More than 77 mm (3.03 in.)

If incorrect, troubleshoot the brake system.

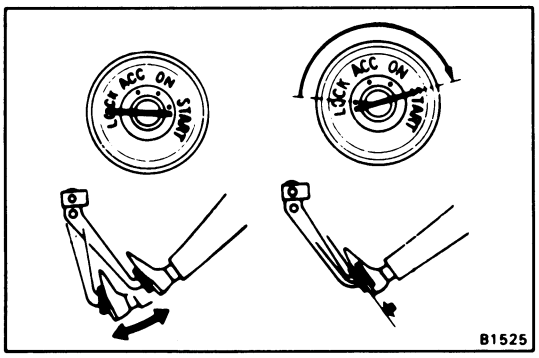

OPERATIONAL TEST OF BRAKE BOOSTER

NOTE: If available, use a brake booster tester to check the booster operating condition.

1. OPERATING CHECK

(a) Depress the brake pedal several times with the engine stopped, and check that there is no change in the pedal reserve distance.

(b) Depress the brake pedal and start the engine. If the pedal goes down slightly, operation is normal.

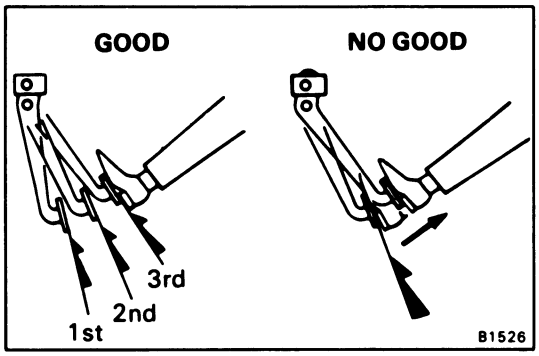

2. AIR TIGHTNESS CHECK

(a) Start the engine and stop it after one or two minutes. Depress the brake pedal several times slowly. If the pedal goes down furtherest the first time, but gradually rises after the second or third time, the booster is air tight.

(b) Depress the brake pedal while the engine is running, and stop it with the pedal depressed. If there is no change in pedal reserve travel after holding the pedal for thirty seconds, the booster is air tight.

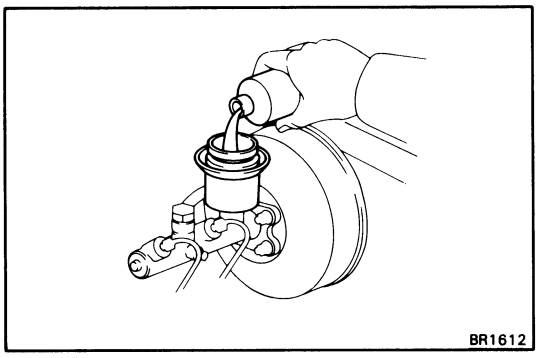

BLEEDING OF BRAKE SYSTEM

NOTE: If any work is done on the brake system or if air is suspected in the brake lines, bleed the system of air.

CAUTION: Do not let brake fluid remain on a painted surface. Wash it off immediately.

1. FILL BRAKE RESERVOIR WITH BRAKE FLUID

Check the reservoir after bleeding each wheel. Add fluid, if necessary.

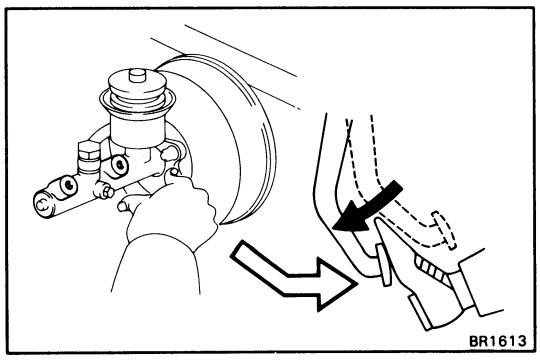

2. BLEED MASTER CYLINDER

NOTE: If the master cylinder was disassembled or if the reservoir becomes empty, bleed the air from the master cylinder.

(a) Disconnect the brake tubes from the master cylinder. Use a container to catch the brake fluid.

(b) Slowly depress the brake pedal and hold it.

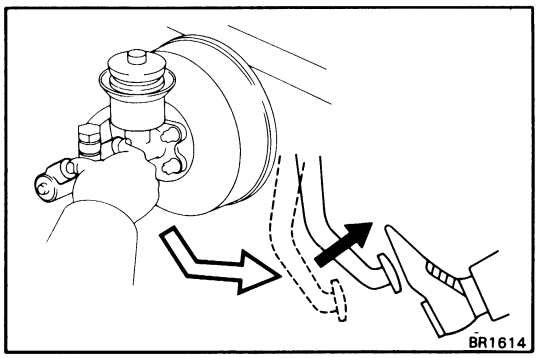

(c) Block off the outlet holes with your fingers, and release the brake pedal.

(d) Repeat (b) and (c) three or four times.

(e) Connect the brake tubes to the master cylinder.

3. BEGIN BLEEDING AIR FROM BRAKE CYLINDER WITH LONGEST HYDRAULIC LINE

(a) Connect the vinyl tube to the brake cylinder bleeder plug, and insert the other end of the tube in a half-full container of brake fluid.

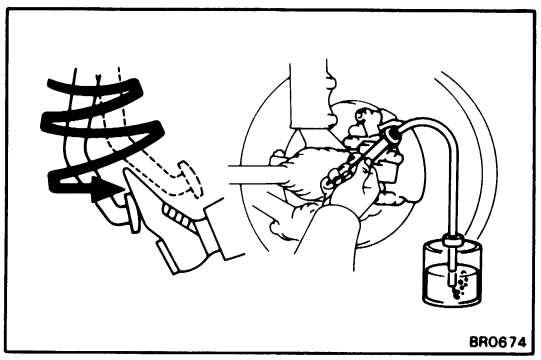

(b) Slowly depress the brake pedal several times.

(c) While having an assistant press on the pedal, loosen the bleeder plug until fluid starts to runout. Then close the bleeder plug.

(d) Repeat (b) and (c) until there are no more air bubbles in the fluid.

(e) Tighten the bleeder plug.

Bleeder plug tightening torque:
85 kg-cm (74 in.-lb, 8.3 N·m)

4. REPEAT PROCEDURE FOR EACH WHEEL

CHECK AND ADJUSTMENT OF PARKING BRAKE

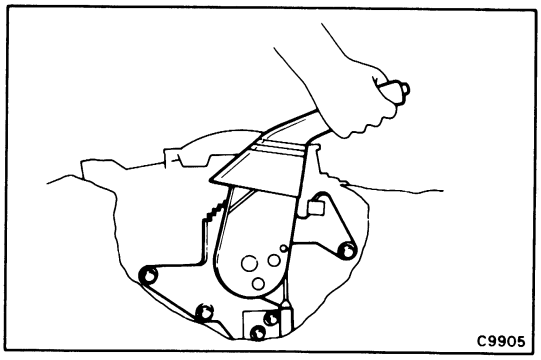

1. CHECK THAT PARKING BRAKE LEVER TRAVEL IS CORRECT

(a) Pull the parking brake lever all the way up and down for two or three times. Then return the parking brake lever.

(b) Depress the brake pedal for several times.

(c) Pull the parking brake lever all the way up, and count the notches of lever travel.

Parking brake lever travel
at 20 kg (44.1 lb, 196 N): 5 – 8 clicks

If incorrect, adjust the parking brake.

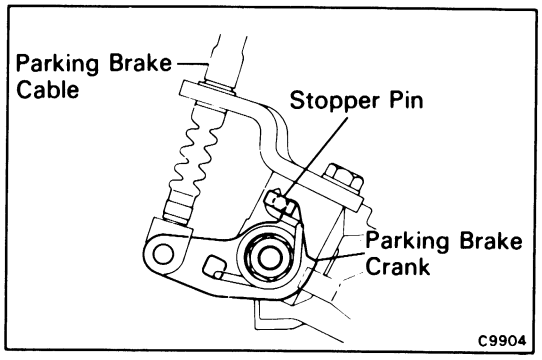

2. IF NECESSARY, ADJUST PARKING BRAKE

(a) Pull the parking brake lever all the way up and down for two or three times. Then return the parking brake lever.

(b) Depress the brake pedal for several times.

(c) Remove the fuel tank protector.

(d) Loosen the adjusting nut and brake cable, and check that the parking brake crank touches stopper pin.

(e) Stretch the brake cable by turning the adjusting nut before the parking brake crank begin moving.

(f) Tighten the adjusting nuts.

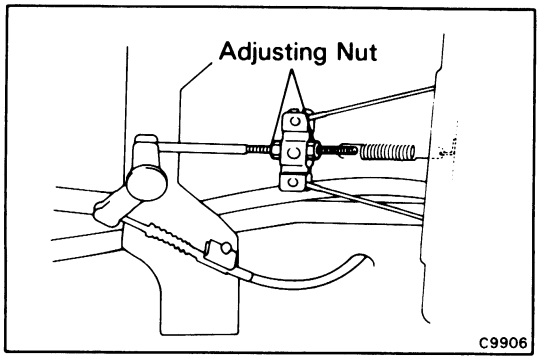

NOTE: Tighten the adjusting nuts so the equalizer is horizontal to the ground.

Torque: 160 kg-cm (12 ft-lb, 16 N·m)

(g) Install the fuel tank protector.

MASTER CYLINDER

REMOVAL OF MASTER CYLINDER COMPONENTS

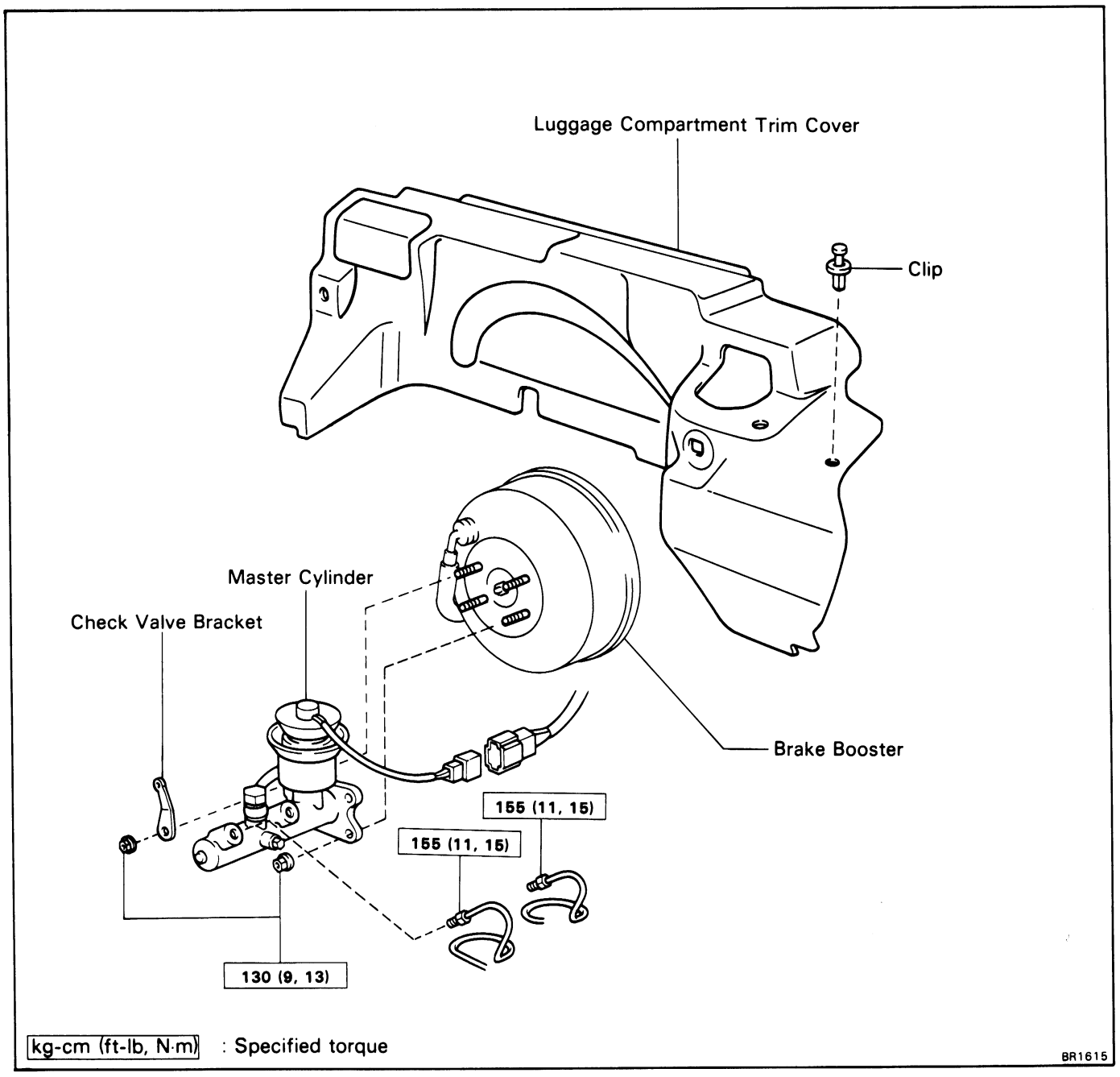

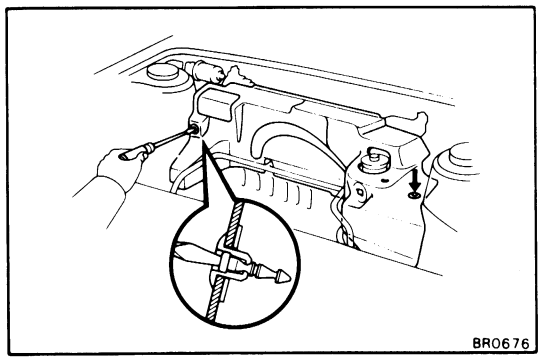

1. **REMOVE LUGGAGE COMPARTMENT TRIM COVER**

   Remove the two clips after disengaging the inner part of the clip, and remove the cover.

2. **DISCONNECT LEVEL WARNING SWITCH CONNECTOR**

3. **TAKE OUT FLUID WITH SYRINGE**

   CAUTION: Do not let brake fluid remain on a painted surface. Wash it off immediately.

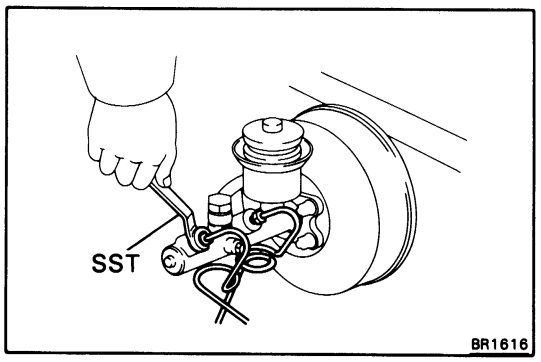

4. DISCONNECT TWO BRAKE TUBES

Using SST, disconnect two brake tubes from the master cylinder.

SST 09751-36011

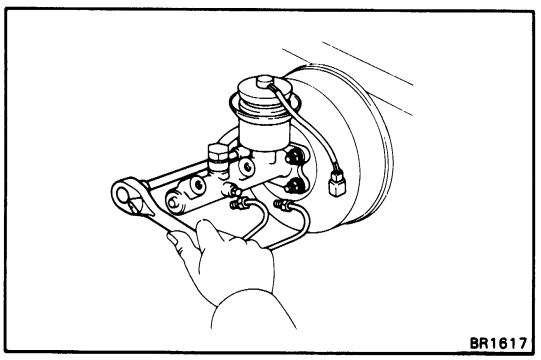

5. REMOVE MASTER CYLINDER

(a) Remove the four nuts and check valve bracket.

(b) Remove the master cylinder from the brake booster.

DISASSEMBLY OF MASTER CYLINDER COMPONENTS

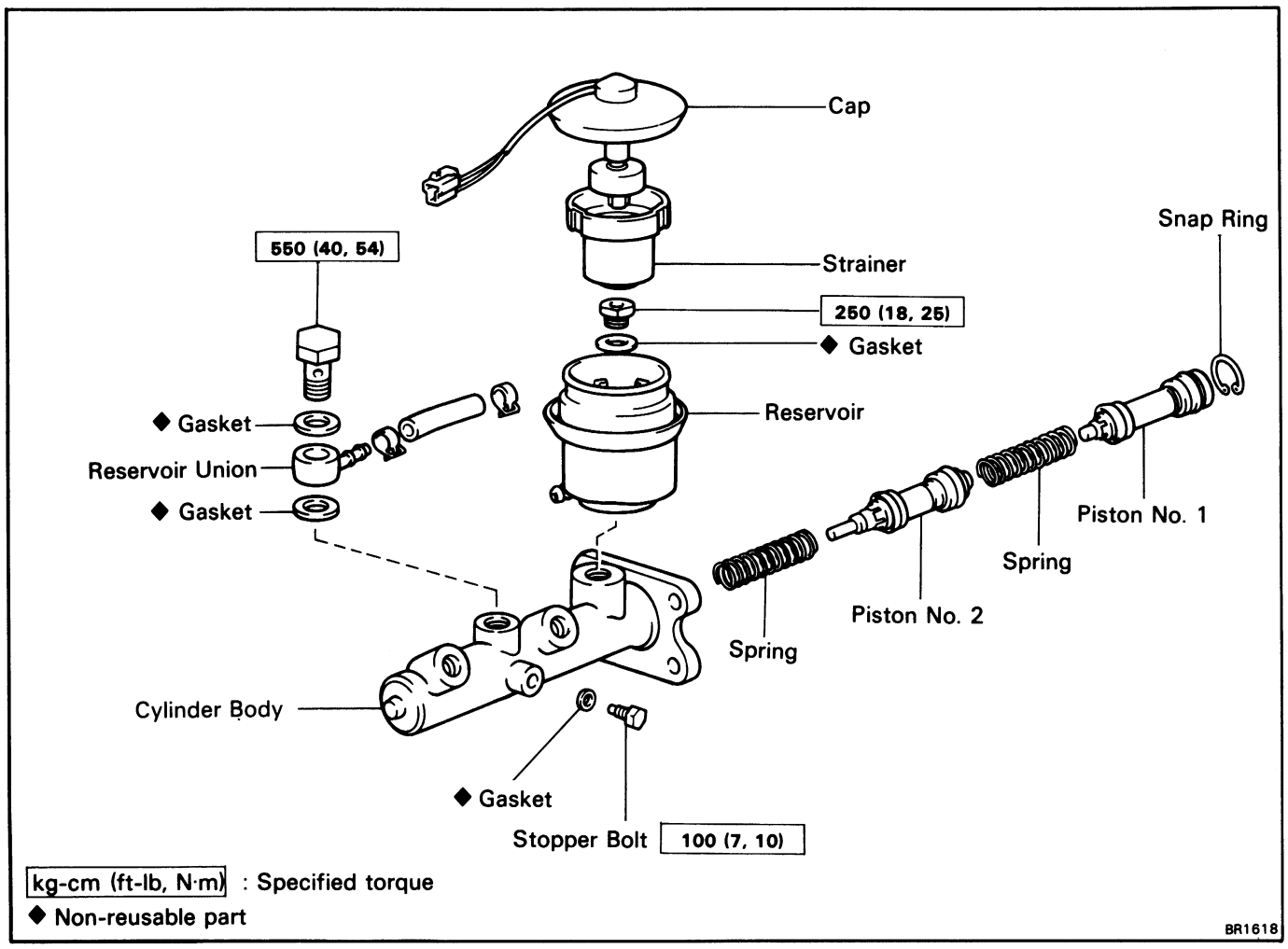

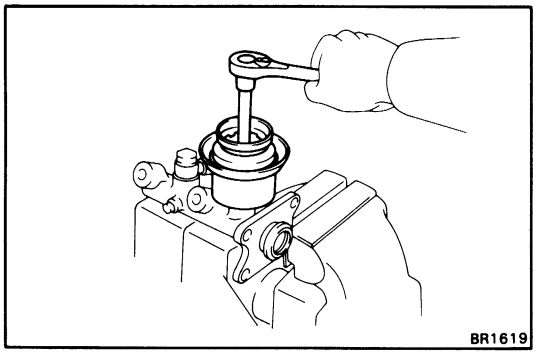

1. PLACE CYLINDER IN VISE

2. REMOVE RESERVOIR AND HOSE

(a) Remove the set bolt from the reservoir.

(b) Remove the reservoir with the hose from the master cylinder.

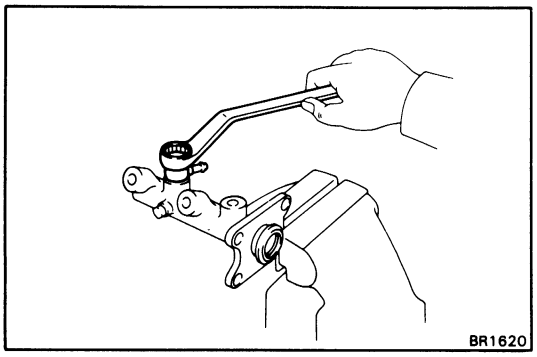

3. REMOVE RESERVOIR UNION

(a) Remove the union bolt.

(b) Remove the reservoir union and two gaskets.

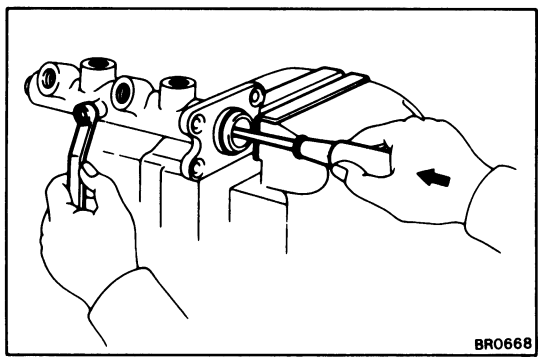

4. REMOVE PISTON STOPPER BOLT

Using a screwdriver, push the pistons in all the way, and remove the piston stopper bolt and gasket.

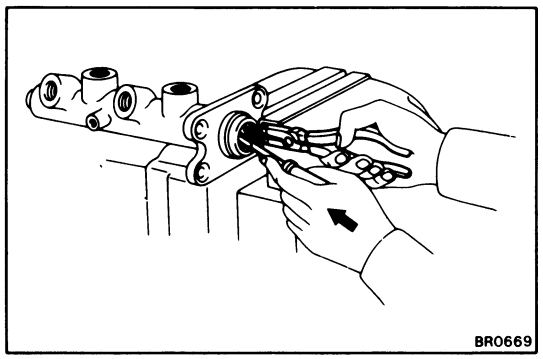

5. REMOVE TWO PISTONS AND SPRINGS

(a) Push in the piston with a screwdriver and remove the snap ring with snap ring pliers.

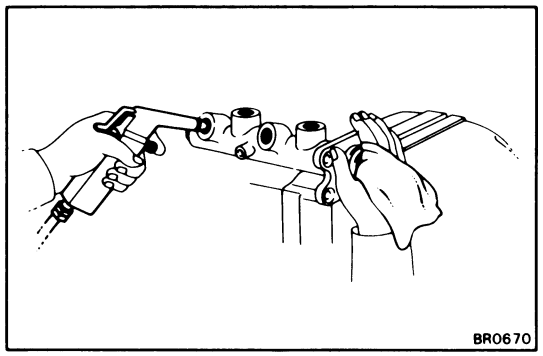

(b) Remove the two pistons and springs from the master cylinder. If necessary, inject compressed air into the outlet hole to force out the piston.

INSPECTION OF MASTER CYLINDER

NOTE: Clean the disassembled parts with compressed air.

1. INSPECT CYLINDER BORE FOR RUST AND SCORING

2. INSPECT CYLINDER FOR WEAR OR DAMAGE

If necessary, clean or replace the cylinder.

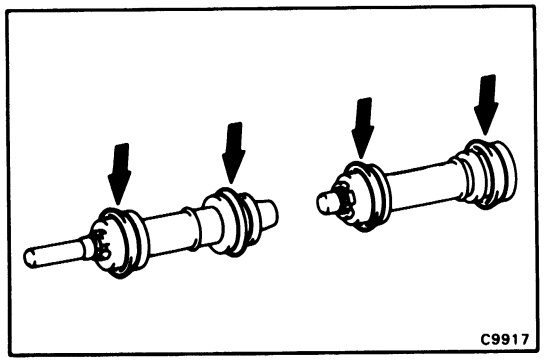

ASSEMBLY OF MASTER CYLINDER

(See page BR-10)

1. APPLY LITHIUM SOAP BASE GLYCOL GREASE TO RUBBER PARTS OF PISTON

2. INSTALL TWO SPRINGS AND PISTONS

CAUTION: Be careful not to damage the rubber lips on the pistons.

(a) Insert two springs and pistons straight in, not at an angle.

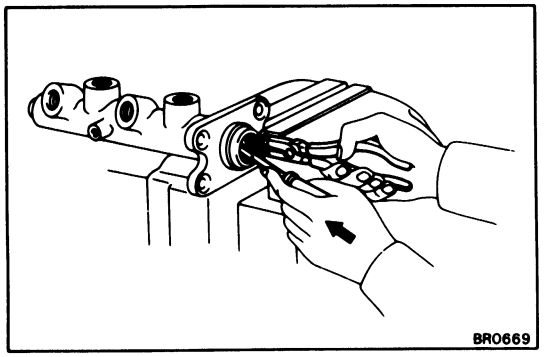

(b) Using snap ring pliers, install the snap ring.

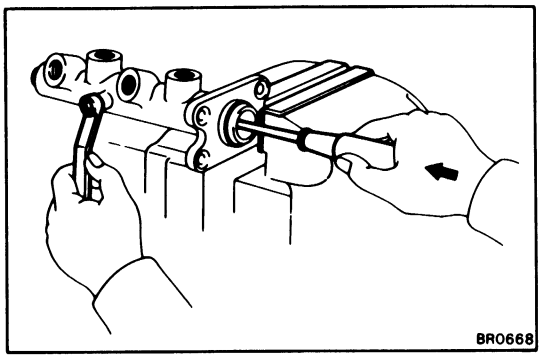

3. INSTALL PISTON STOPPER BOLT AND NEW GASKET

Using a screwdriver, push the pistons in all the way and install the piston stopper bolt through the new gasket. Torque the bolt.

Torque: 100 kg-cm (7 ft-lb, 10 N·m)

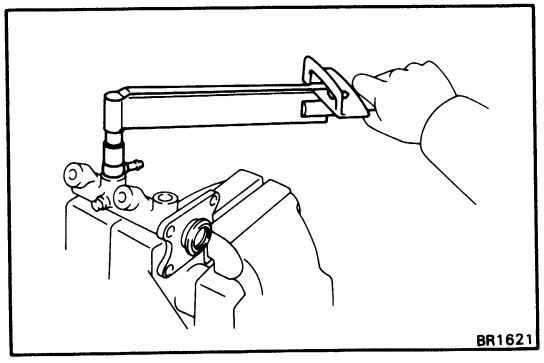

4. INSTALL RESERVOIR UNION

(a) Install the union through the new gaskets.

(b) Install and torque the union bolt.

Torque: 550 kg-cm (40 ft-lb, 54 N·m)

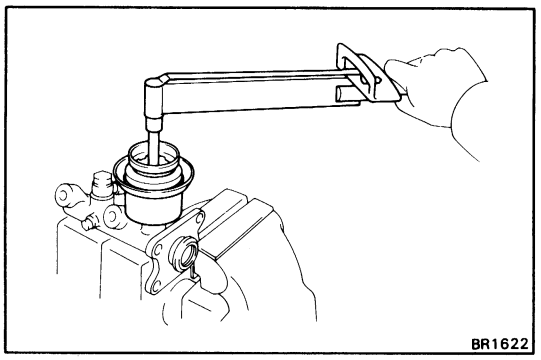

5. INSTALL RESERVOIR AND HOSE

(a) Connect the hose to union and reservoir.

(b) Install the reservoir on the master cylinder with the "MAX" mark facing toward the front.

(c) Install the bolt through the new washer and torque it.

Torque: 250 kg-cm (18 ft-lb, 25 N·m)

INSTALLATION OF MASTER CYLINDER

1. CLEAN OUT GROOVE ON LOWER INSTALLATION SURFACE OF MASTER CYLINDER

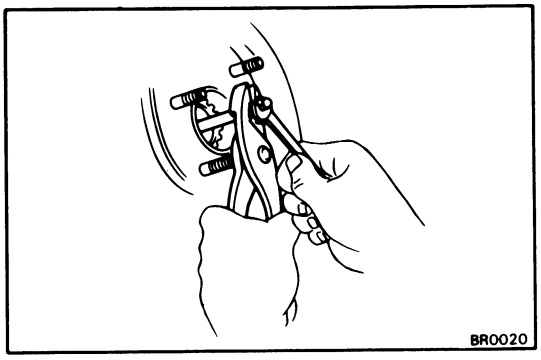

2. ADJUST LENGTH OF BRAKE BOOSTER PUSH ROD BEFORE INSTALLING MASTER CYLINDER (See page BR-16)

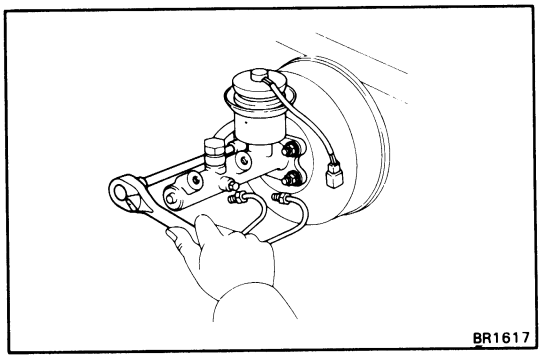

3. INSTALL MASTER CYLINDER

Install the master cylinder and check valve bracket on the brake booster with four nuts.

Torque: 130 kg-cm (9 ft-lb, 13 N·m)

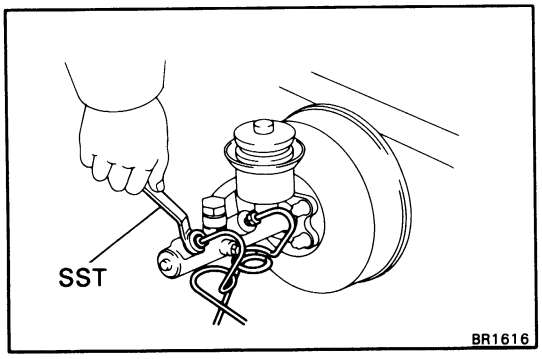

4. CONNECT TWO BRAKE TUBES

(a) Finger tighten the union nuts.

(b) Using SST, torque the union nuts.

SST 09751-36011

Torque: 155 kg-cm (11 ft-lb, 15 N·m)

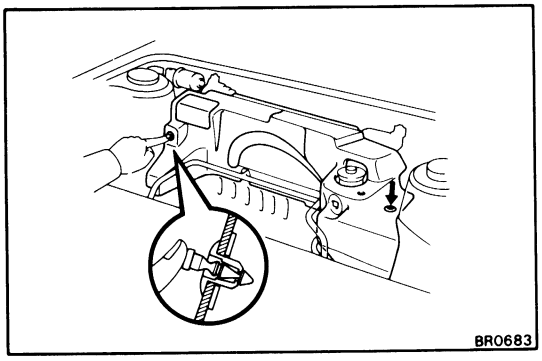

5. INSTALL LUGGAGE COMPARTMENT TRIM COVER

6. CONNECT LEVEL WARNING SWITCH CONNECTOR

7. FILL BRAKE RESERVOIR WITH BRAKE FLUID AND BLEED BRAKE SYSTEM (See page BR-6)

8. CHECK FOR LEAKS

9. CHECK AND ADJUST BRAKE PEDAL (See page BR-5)

BRAKE BOOSTER

REMOVAL OF BRAKE BOOSTER

COMPONENTS

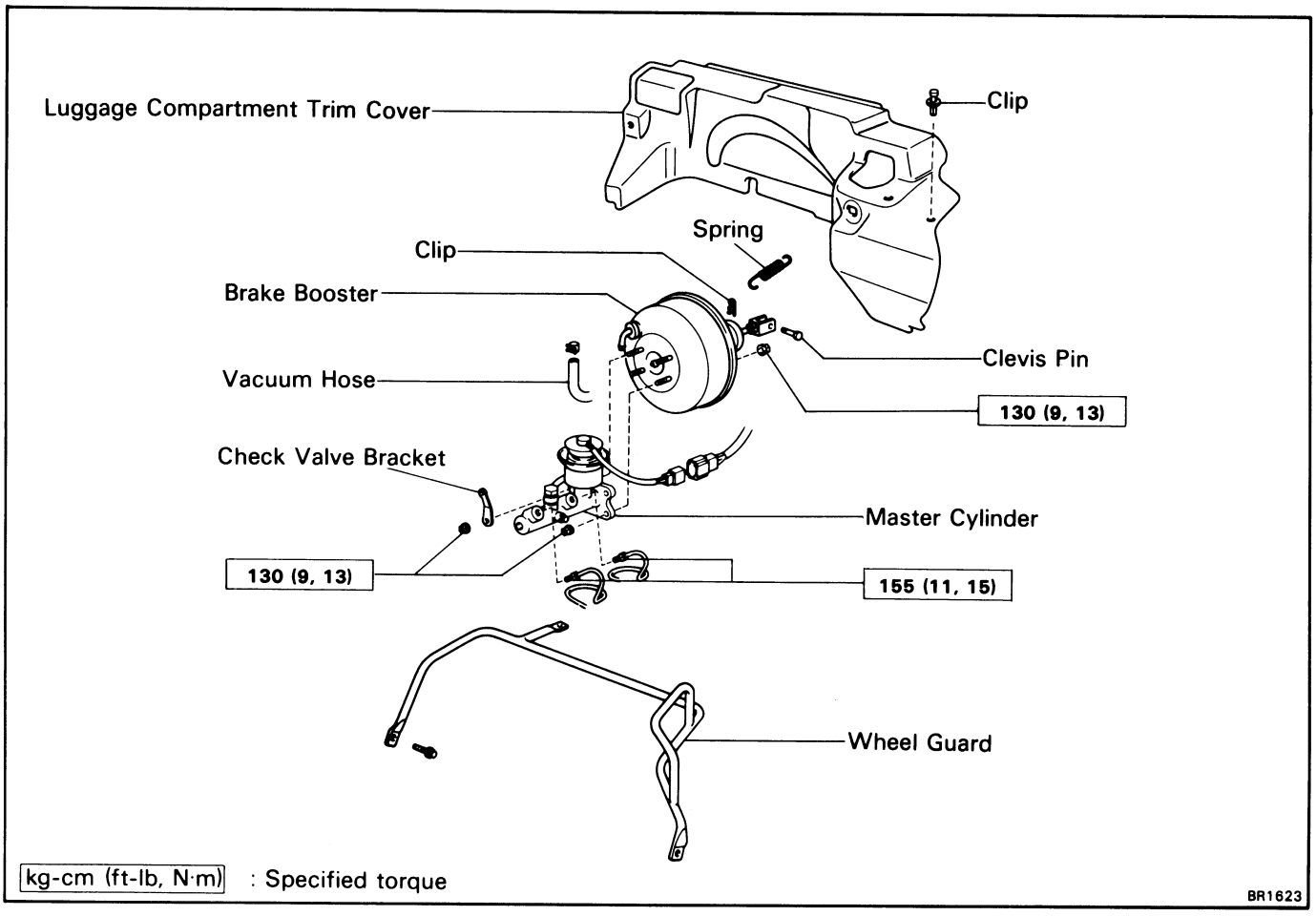

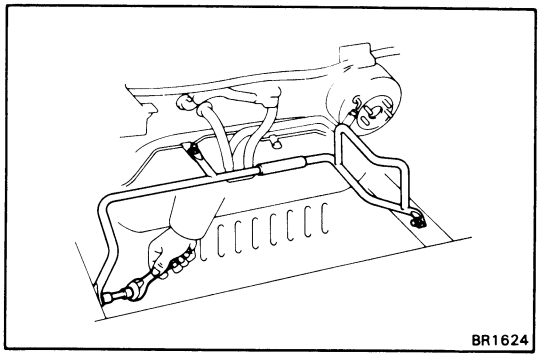

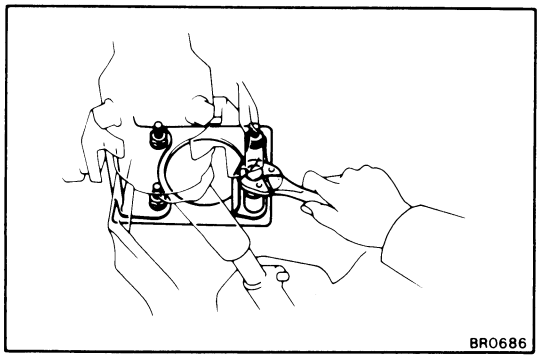

1. **REMOVE MASTER CYLINDER (See page BR-8)**
2. **REMOVE WHEEL GUARD**
3. **DISCONNECT VACUUM HOSE FROM BRAKE BOOSTER**
4. **REMOVE INSTRUMENT LOWER FINISH PANEL AND AIR DUCT**
5. **REMOVE PEDAL RETURN SPRING**
6. **REMOVE CLIP AND CLEVIS PIN**
7. **REMOVE BRAKE BOOSTER**

   Remove the four nuts, and pull out the brake booster.

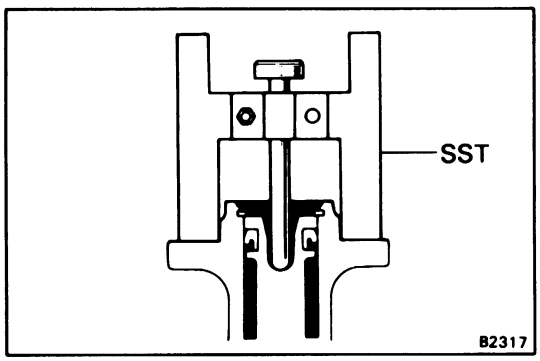

INSTALLATION OF BRAKE BOOSTER

1. ADJUST LENGTH OF BOOSTER PUSH ROD

(a) Set SST on the master cylinder, and lower the pin until its tip slightly touches the piston.

SST 09737-00010

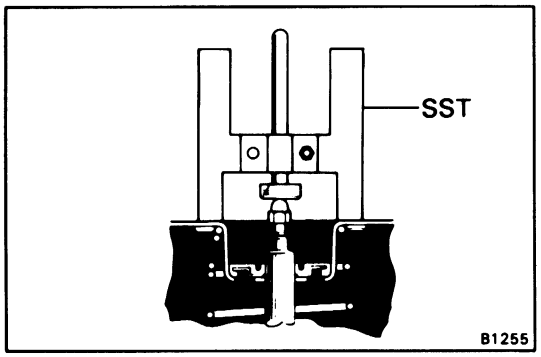

(b) Turn SST upside down, and set it on the booster.

SST 09737-00010

(c) Measure the clearance between the booster push rod and pin head (SST).

Clearance: 0 mm (0 in.)

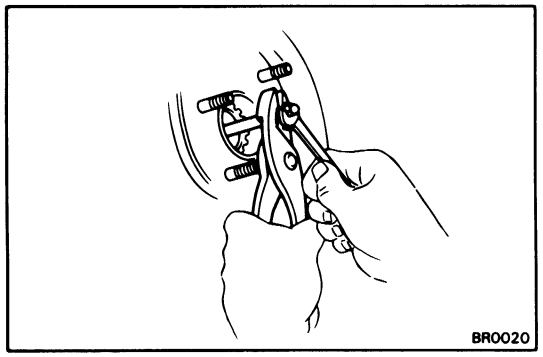

(d) Adjust the booster push rod length until the push rod lightly touches the pin head.

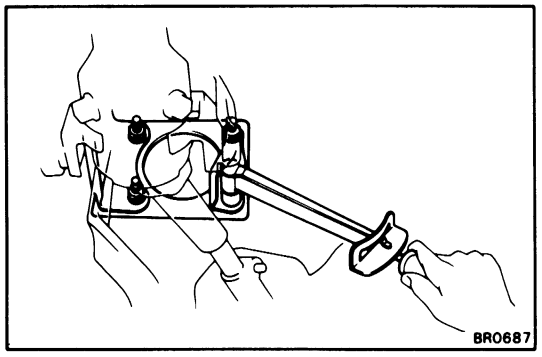

2. INSTALL BRAKE BOOSTER

Install the brake booster, and torque the four nuts.

Torque: 130 kg-cm (9 ft-lb, 13 N·m)

3. CONNECT CLEVIS TO BRAKE PEDAL

Insert the clevis pin into the clevis and brake pedal and install the clip to the clevis pin.

4. INSTALL PEDAL RETURN SPRING

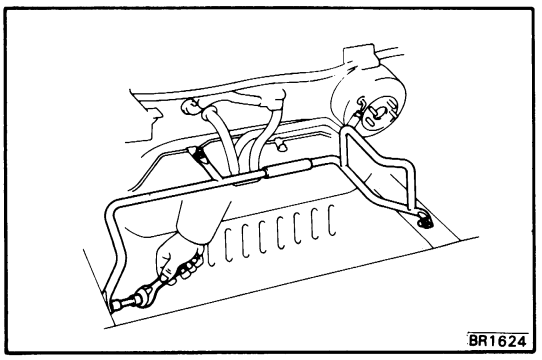

5. INSTALL WHEEL GUARD

6. **INSTALL MASTER CYLINDER (See page BR-14)**
7. **CONNECT HOSE TO BRAKE BOOSTER**
8. **FILL BRAKE RESERVOIR WITH BRAKE FLUID AND BLEED BRAKE SYSTEM (See page BR-6)**
9. **CHECK FOR LEAKS**
10. **CHECK AND ADJUST BRAKE PEDAL (See page BR-5)**
11. **PERFORM OPERATIONAL CHECK (See page BR-6)**
12. **INSTALL INSTRUMENT LOWER FINISH PANEL AND AIR DUCT**
13. **INSTALL LUGGAGE COMPARTMENT TRIM COVER**

FRONT BRAKE

COMPONENTS

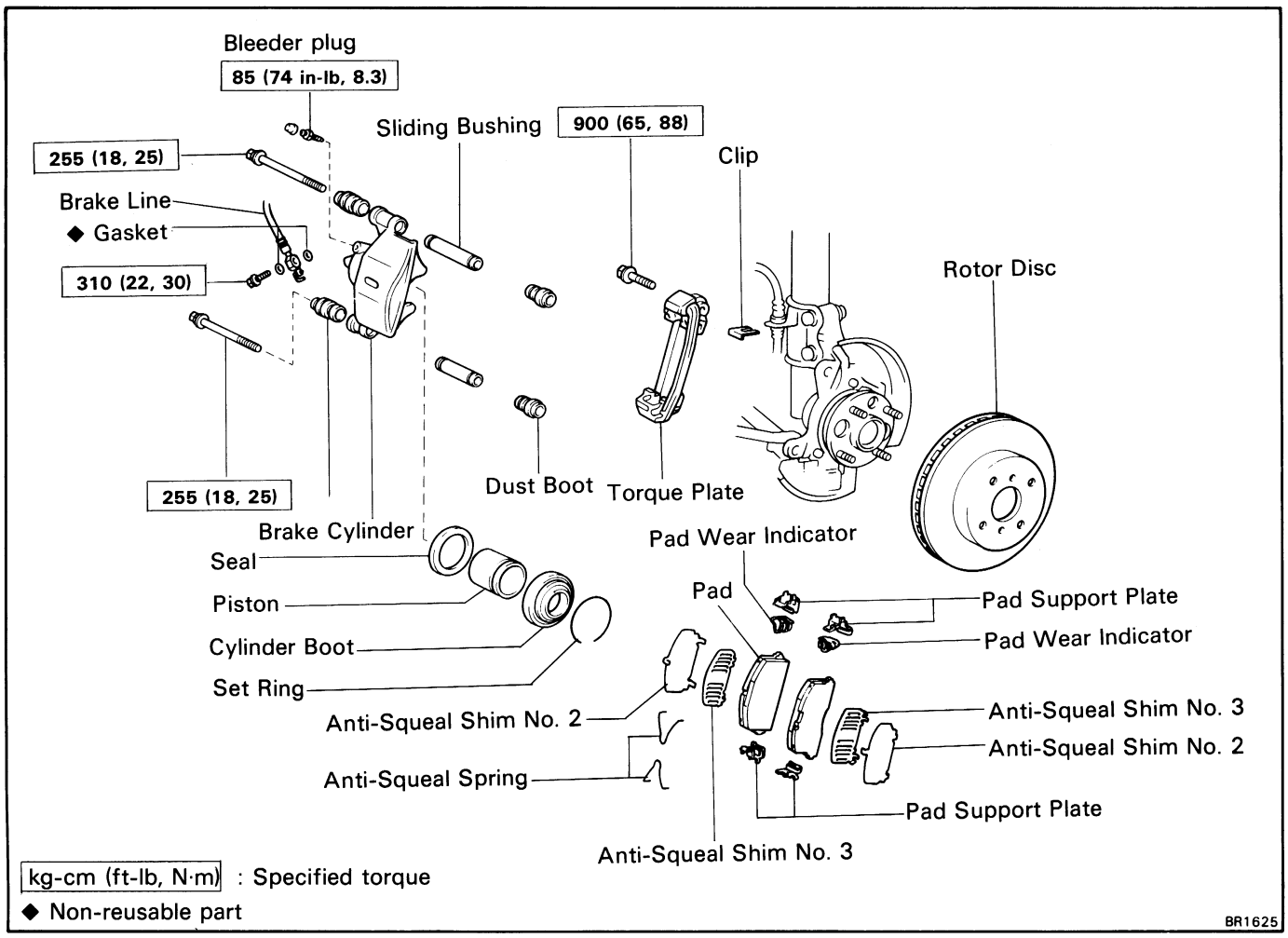

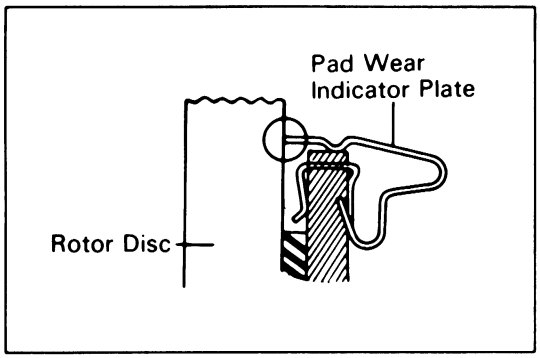

REPLACEMENT OF BRAKE PADS

NOTE: If a squealing noise occurs from the front brakes while driving, check the pad wear indicator plate. If there are traces of the indicator plate contacting the rotor disc, the brake pad should be replaced.

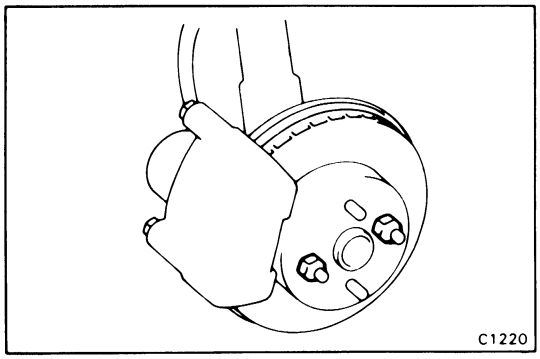

1. REMOVE FRONT WHEEL

Remove the wheel and temporarily fasten the rotor disc with the hub nuts.

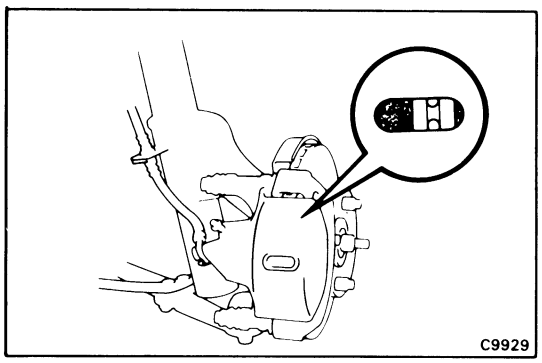

2. INSPECT PAD LINING THICKNESS

Check the pad thickness through the cylinder inspection hole and replace pads if not within specification.

Minimum thickness: 3.0 mm (0.118 in.)

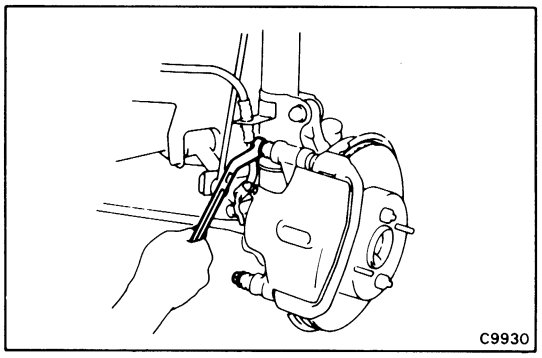

3. REMOVE CYLINDER FROM TORQUE PLATE

(a) Remove two installation bolts from the torque plate.

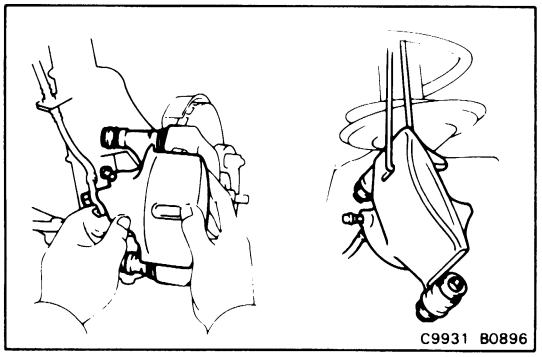

(b) Remove the brake cylinder and suspend it so the hose is not stretched.

NOTE: Do not disconnect the brake hose.

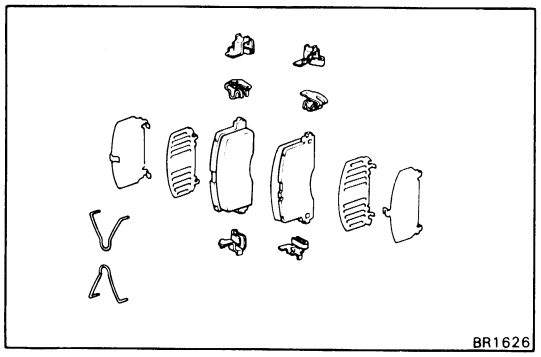

4. REMOVE FOLLOWING PARTS

(a) Two anti-squeal springs

(b) Two brake pads

(c) Four anti-squeal shims

(d) Two pad wear indicator plates

(e) Four pad support plates

5. CHECK ROTOR DISC THICKNESS
(See step 2 on page BR-23)

6. CHECK ROTOR DISC RUNOUT
(See step 3 on page BR-23)

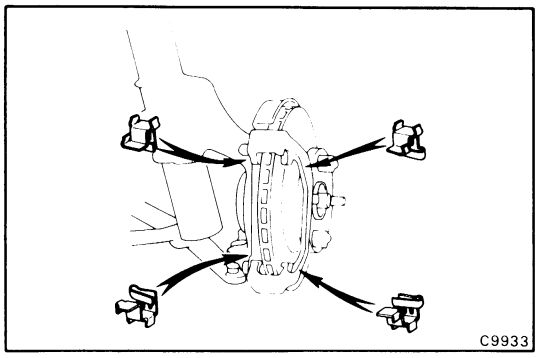

7. INSTALL PAD SUPPORT PLATES

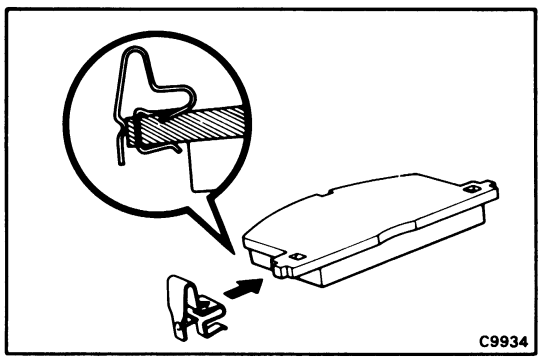

8. INSTALL NEW PADS

(a) Install a pad wear indicator plate to the pad.

NOTE: Be sure the arrow on the pad wear indicator plate is pointing in the rotating direction of the disc.

(b) Install anti-squeal shims to the pad.

NOTE: Apply disc brake grease to the both side of the anti-squeal shim No. 3.

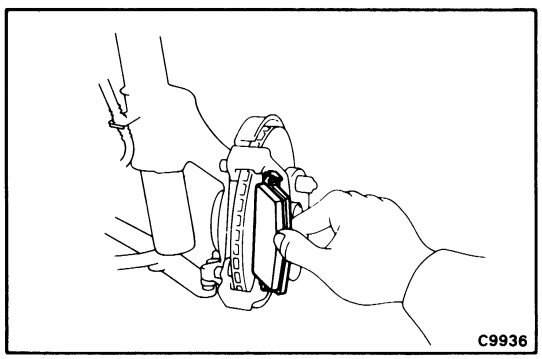

(c) Install the pads onto each support plate.

CAUTION: Do not allow oil or grease to get on the rubbing face.

(d) Install the two anti-squeal springs.

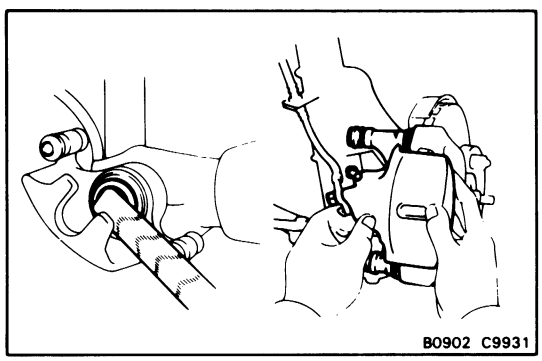

9. INSTALL CYLINDER

(a) Draw out a small amount of brake fluid from the reservoir.

(b) Press in piston with a hammer handle or an equivalent.

NOTE: Always change the pad on one wheel at a time as there is a possibility of the opposite piston flying out.

(c) Insert the brake cylinder carefully so the boot is not wedged.

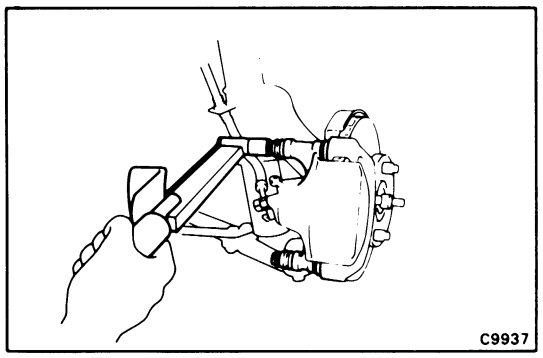

(d) Install and torque two installation bolts.

Torque: 255 kg-cm (18 ft-lb, 25 N·m)

10. INSTALL FRONT WHEEL

11. CHECK THAT FLUID LEVEL IS MAX LINE

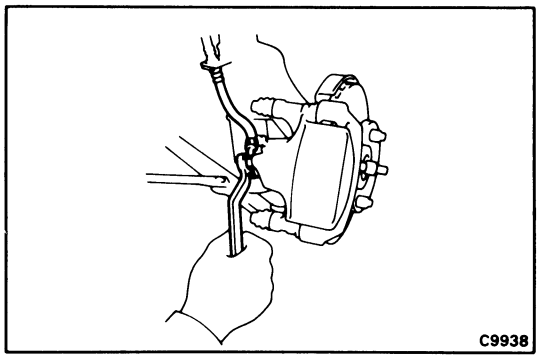

REMOVAL OF CYLINDER

(See page BR-18)

1. DISCONNECT BRAKE LINE

Remove the union bolt and disconnect the brake line. Use a container to catch the brake fluid.

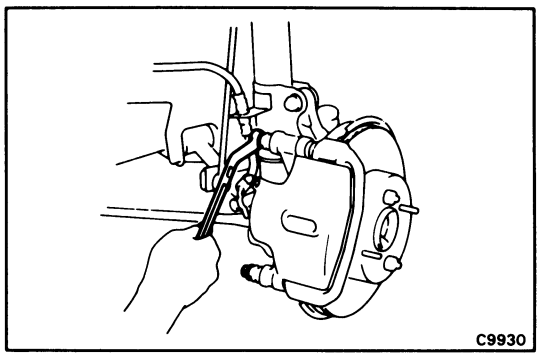

2. REMOVE CYLINDER FROM TORQUE PLATE

Remove the two installation bolts and cylinder.

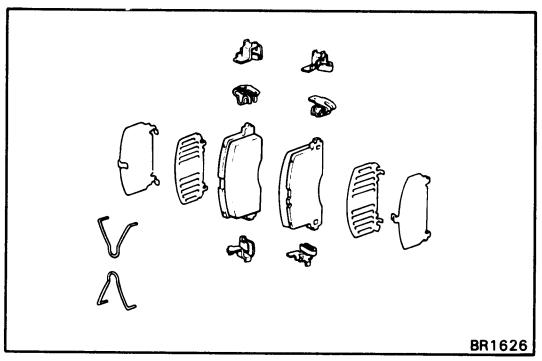

3. REMOVE PADS (See step 4 on page BR-19)

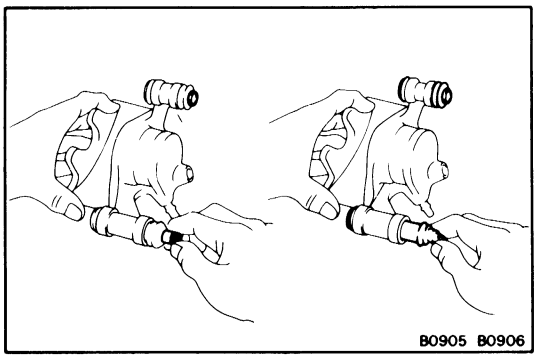

DISASSEMBLY OF CYLINDER

(See page BR-18)

1. REMOVE FOLLOWING PARTS

(a) Two cylinder sliding bushings

(b) Four dust boots

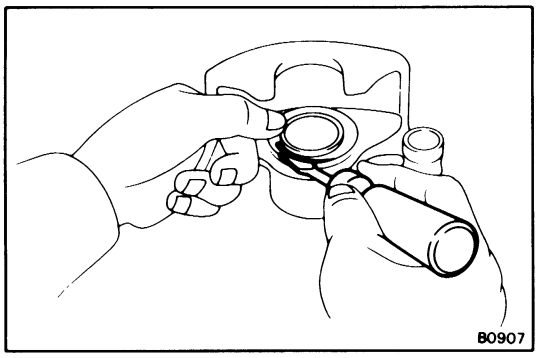

2. REMOVE CYLINDER BOOT SET RING AND CYLINDER BOOT

Using a screwdriver, remove the cylinder boot set ring and cylinder boot.

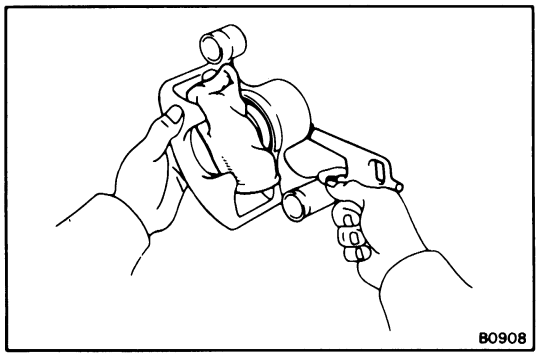

3. REMOVE PISTON FROM CYLINDER

(a) Put a piece of cloth or such between the piston and cylinder.

(b) Use compressed air to remove the piston from the cylinder.

WARNING: Do not place your fingers in front of the piston when using compressed air.

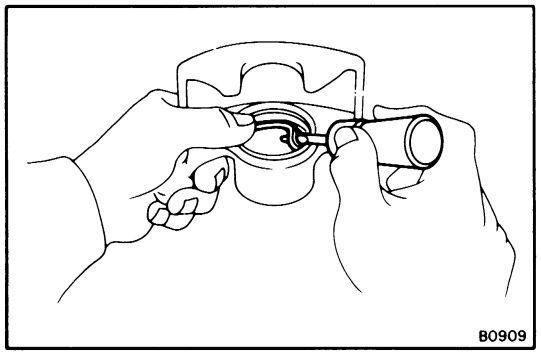

4. REMOVE PISTON SEAL FROM BRAKE CYLINDER

Using a screwdriver, remove the piston seal.

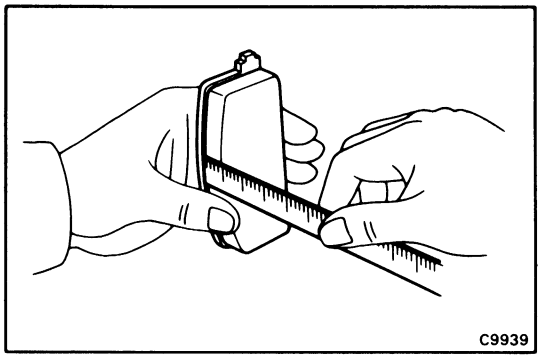

INSPECTION AND REPAIR OF FRONT BRAKE COMPONENTS

1. MEASURE PAD LINING THICKNESS

Standard thickness: 10.0 mm (0.394 in.)
Minimum thickness: 3.0 mm (0.118 in.)

Replace the pad if the thickness is less than the minimum or if it shows sign of uneven wear.

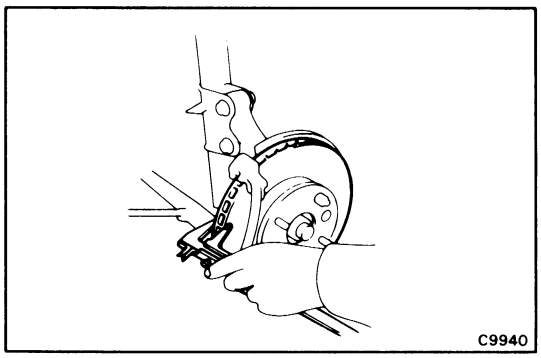

2. MEASURE ROTOR DISC THICKNESS

Standard thickness: 22.0 mm (0.866 in.)
Minimum thickness: 21.0 mm (0.827 in.)

If the disc is scored or worn, or if thickness is less than minimum, repair or replace the disc.

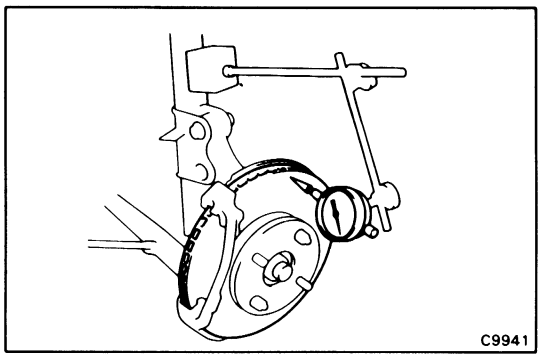

3. MEASURE ROTOR DISC RUNOUT

NOTE: Before measuring the runout, confirm that the front hub bearing play is within specification.
Measure the rotor disc runout at 10 mm (0.39 in.) from the outer edge of the rotor disc.

Maximum disc runout: 0.13 mm (0.0051 in.)

If the runout is greater than the maximum, inspect and adjust following the procedure listed below.

Then replace the disc if necessary.

(a) Remove the torque plate from the knuckle.

(b) Remove the hub nuts of the temporarily installed disc and pull off the rotor disc.

(c) Check that the hub bearing play is within specification, and replace the bearing if not within specification. (See page FA-8)

(d) Install the rotor disc and measure the disc runout, then shift the rotor disc one fourth a turn and measure the disc runout. Similarly measure the runout at each position, and select the position where the runout is minimum.

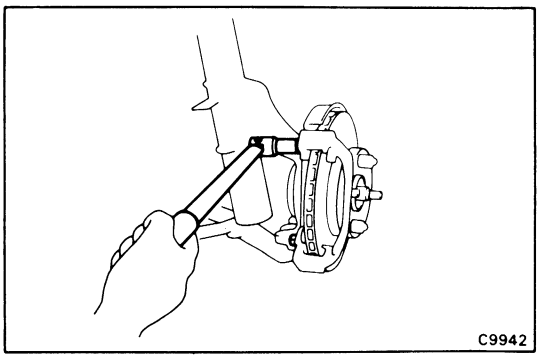

(e) In this position, if the runout is within specification, install the torque plate and torque the mounting bolts.

Torque: 900 kg-cm (65 ft-lb, 88 N·m)

(f) If not within specification, replace the rotor disc, and repeat (d) and (e).

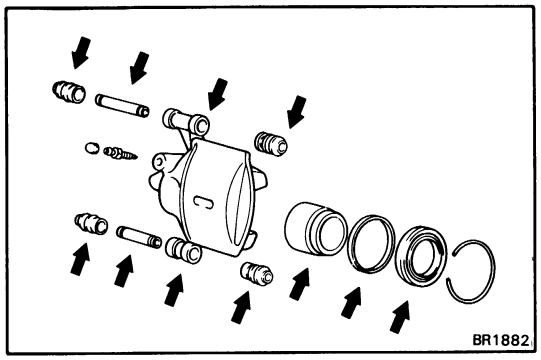

ASSEMBLY OF CYLINDER

(See page BR-18)

1. APPLY LITHIUM SOAP BASE GLYCOL GREASE TO PARTS INDICATED WITH ARROWS

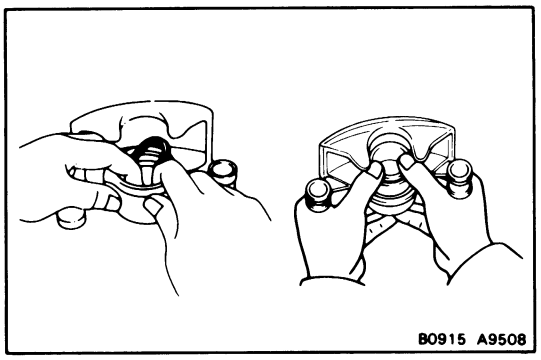

2. INSTALL PISTON SEAL AND PISTON IN CYLINDER

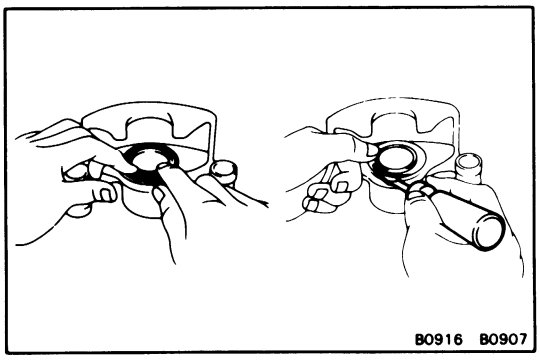

3. INSTALL CYLINDER BOOT AND SET RING IN CYLINDER

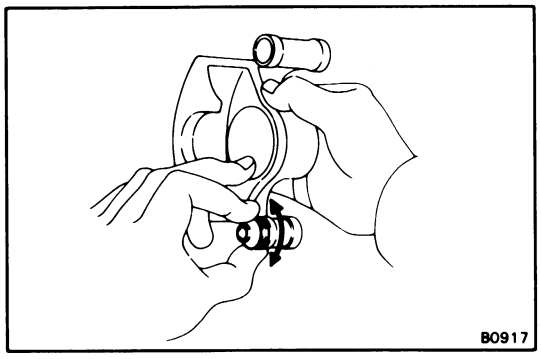

4. INSTALL DUST BOOT AND CYLINDER SLIDING BUSHING

(a) Install the dust boot into the brake cylinder.

(b) Insure that the boot is secured firmly to the brake cylinder groove.

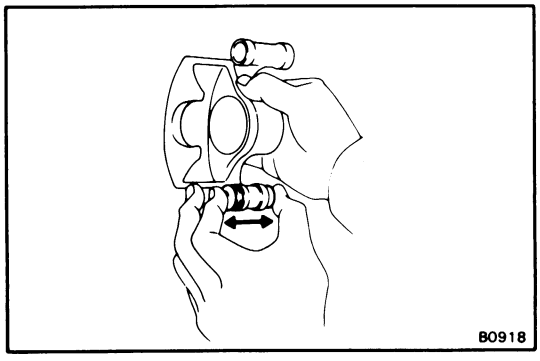

(c) Install the bushing into the boot.

(d) Insure that the boot is secured firmly to the bushing groove.

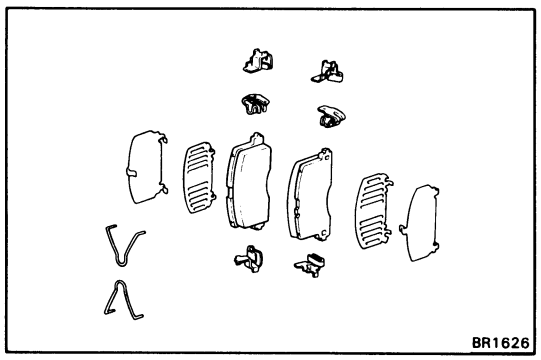

INSTALLATION OF CYLINDER

(See page BR-18)

1. **INSTALL PADS (See step 7 to 8 on page 19 and 20)**
2. **INSTALL CYLINDER**
   (See step 10 on page BR-20)

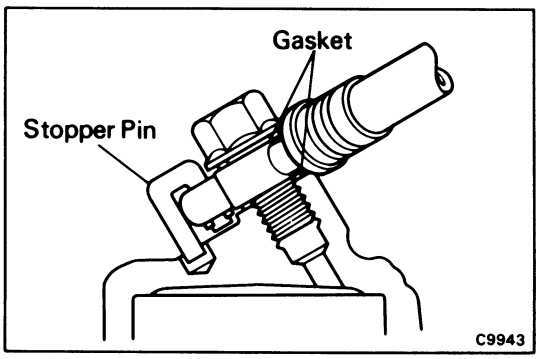

3. **INSTALL FLEXIBLE HOSE TO BRAKE CYLINDER**
   Set the flexible hose and new gaskets in position and install the union bolt.
   Torque: 310 kg-cm (22 ft-lb, 30 N·m)
4. **FILL BRAKE RESERVOIR WITH BRAKE FLUID AND BLEED BRAKE SYSTEM (See page BR-6)**
5. **CHECK FOR LEAKS**

REAR BRAKE

COMPONENTS

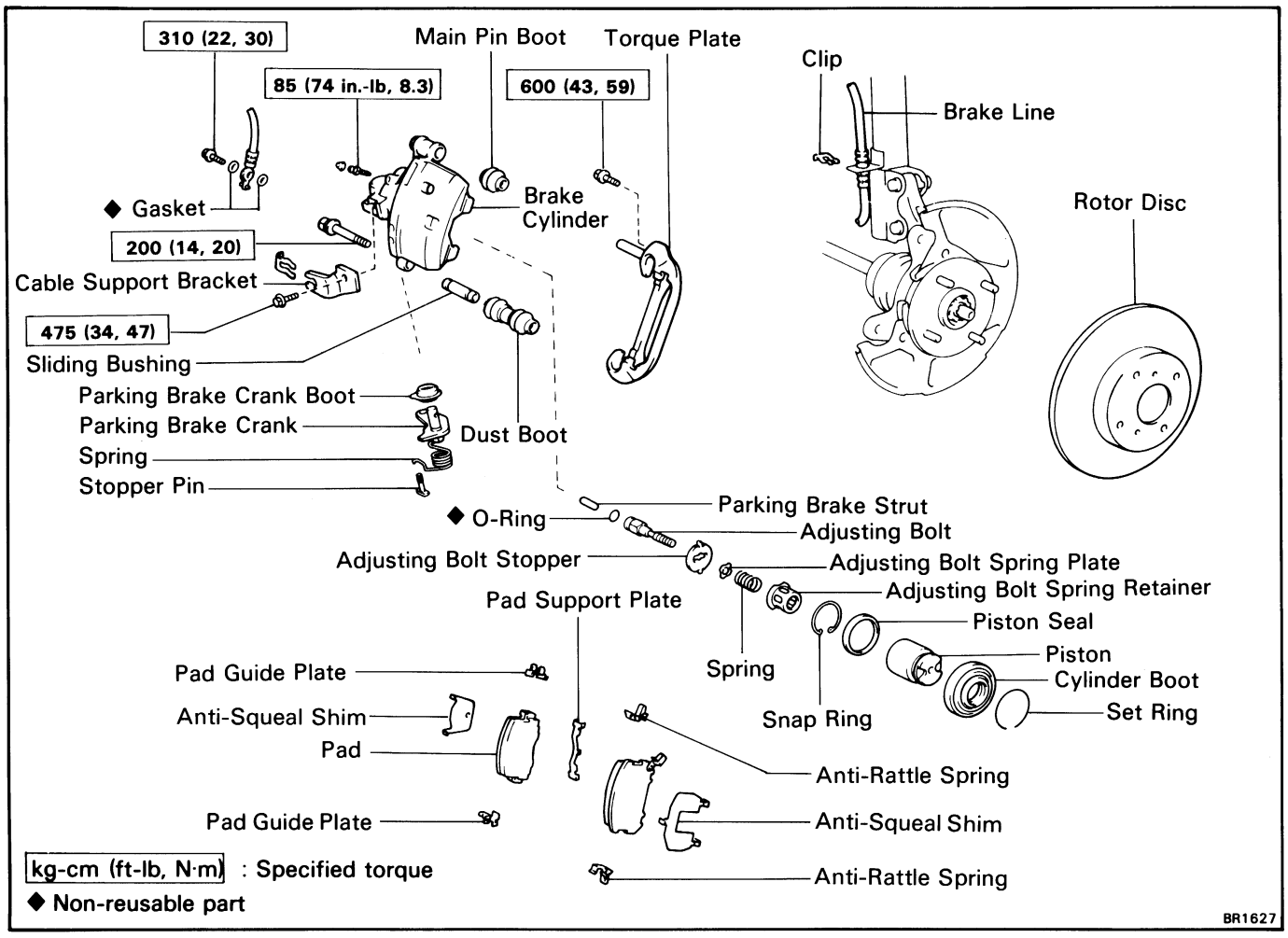

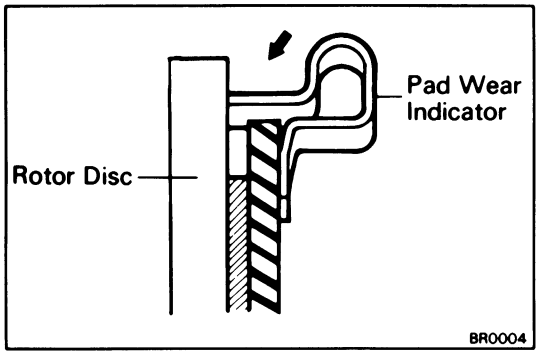

REPLACEMENT OF BRAKE PADS

NOTE: If a squealing noise occurs from the rear brakes while driving, check the pad wear indicator plate. If there are traces of the indicator plate contacting the rotor disc, the brake pad should be replaced.

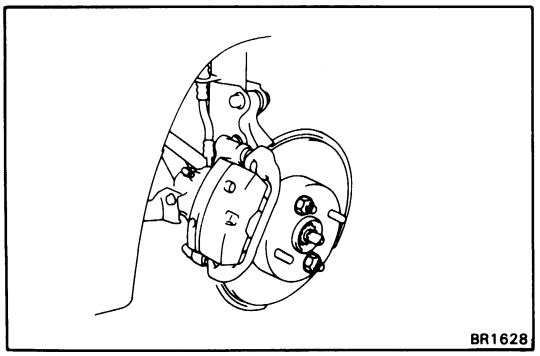

1. **REMOVE REAR WHEEL**

   Remove the wheel and temporarily fasten the rotor disc with the hub nuts.

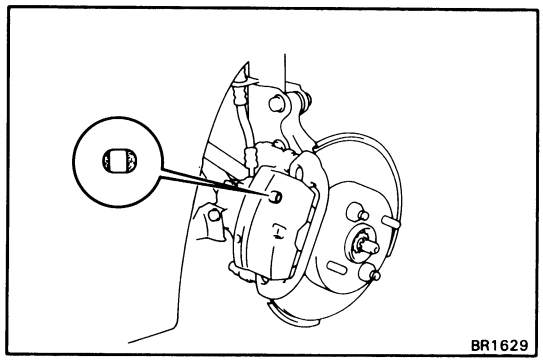

2. INSPECT PAD LINING THICKNESS

Check the pad thickness through the cylinder inspection hole and replace the pads if they are not within specification.

Minimum thickness: 1.0 mm (0.039 in.)

3. DRAW OUT A SMALL AMOUNT OF BRAKE FLUID

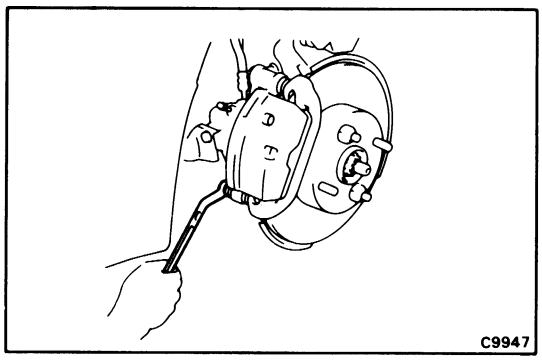

4. REMOVE CYLINDER FROM TORQUE PLATE

(a) Remove the installation bolt from the torque plate.

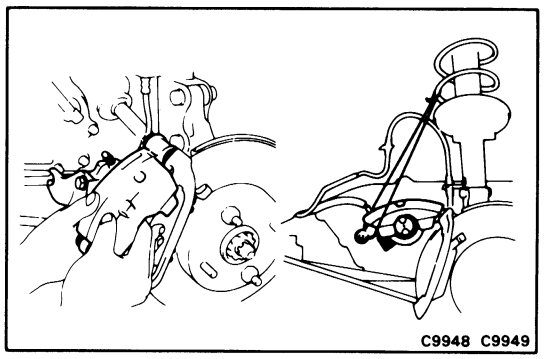

(b) Lift up the brake cylinder and suspend it.

NOTE: Do not remove the cylinder from the main pin, and do not disconnect the brake line.

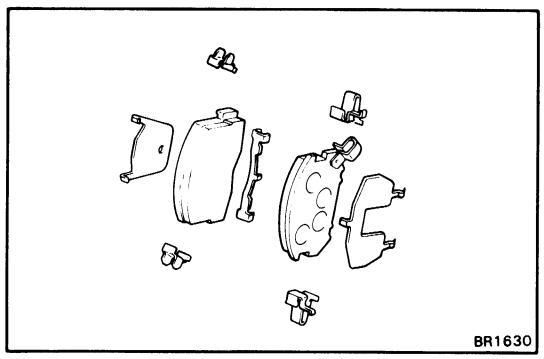

5. REMOVE FOLLOWING PARTS:

(a) Two brake pads
(b) Two anti-squeal shims
(c) Two anti-rattle springs
(d) Pad support plate
(e) Two pad guide plates

6. CHECK ROTOR DISC THICKNESS
(See step 2 on page BR-33)

7. CHECK ROTOR DISC RUNOUT
(See step 3 on page BR-33)

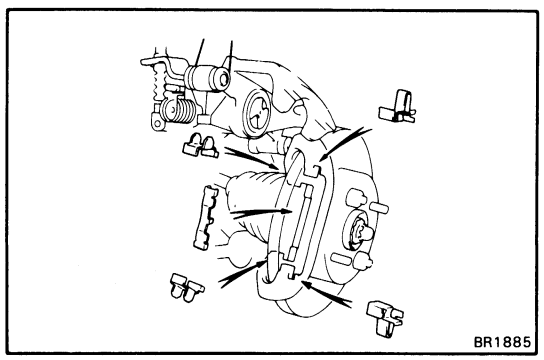

8. INSTALL PAD SUPPORT PLATE, ANTI-RATTLE SPRINGS AND PAD GUIDE PLATES

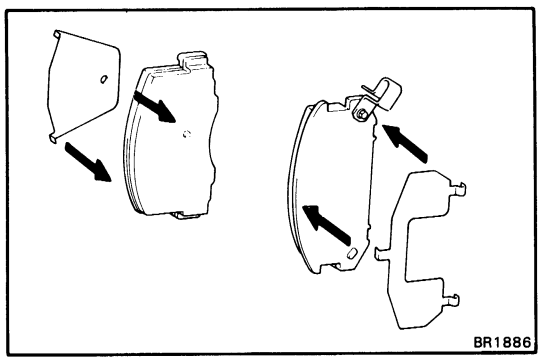

9. INSTALL NEW PADS AND ANTI-SQUEAL SHIMS

(a) Install the anti-squeal shims to the pads.

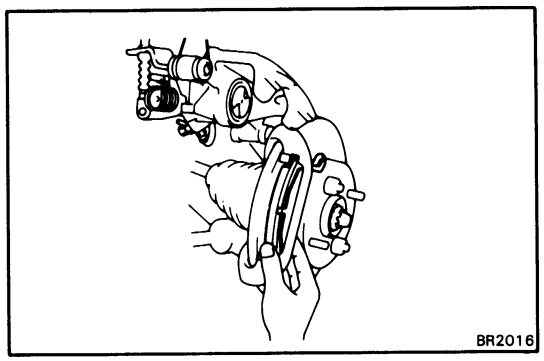

(b) Raise the cylinder, and install the pads to the cylinder mounting.

CAUTION: Do not allow oil or grease to get on the rubbing face.

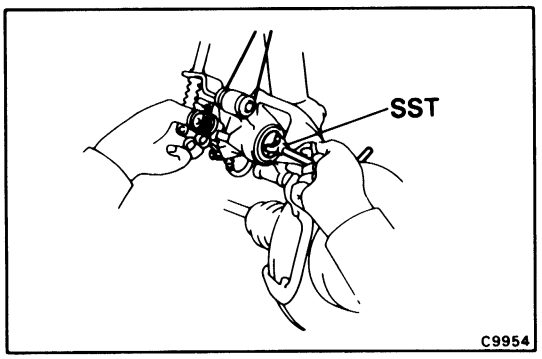

10. LOWER CYLINDER

(a) Using SST, slowly turn the piston clockwise while pushing it into where it locks.

SST 09719-14020 (09719-00020)

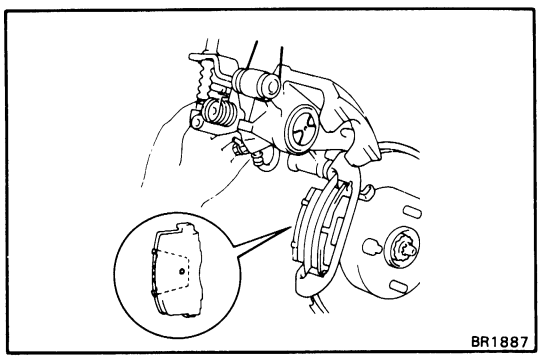

(b) Fit the pad protrusion into the piston stopper groove, and install the cylinder.

NOTE: Insert the cylinder carefully so the boot is not wedged.

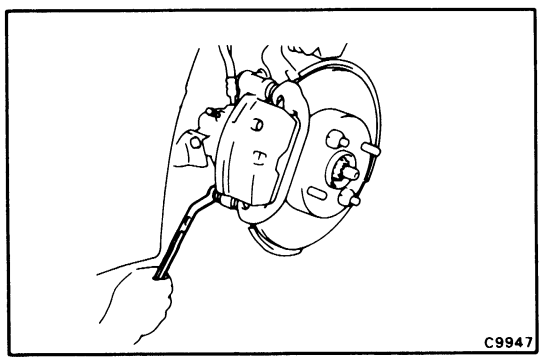

11. INSTALL CYLINDER INSTALLATION BOLT

Install and torque the cylinder installation bolt.

Torque: 200 kg-cm (14 ft-lb, 20 N·m)

12. INSTALL REAR WHEEL

13. CHECK THAT FLUID LEVEL IS AT "MAX" LINE

14. ADJUST PARKING BRAKE AUTOMATIC ADJUSTER BY DEPRESSING BRAKE PEDAL FOR SEVERAL TIMES

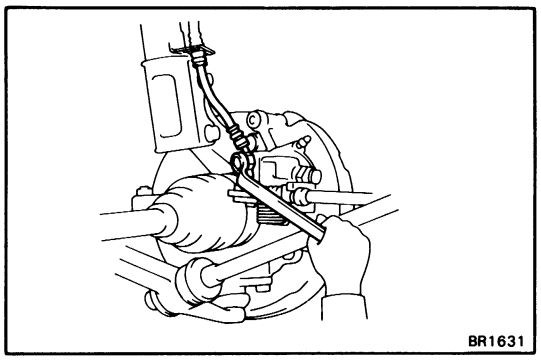

REMOVAL OF CYLINDER

(See page BR-26)

1. DISCONNECT BRAKE HOSE FROM CYLINDER

(a) Remove the union bolt and two gaskets, and disconnect the brake hose.

(b) Use a container to catch the brake fluid.

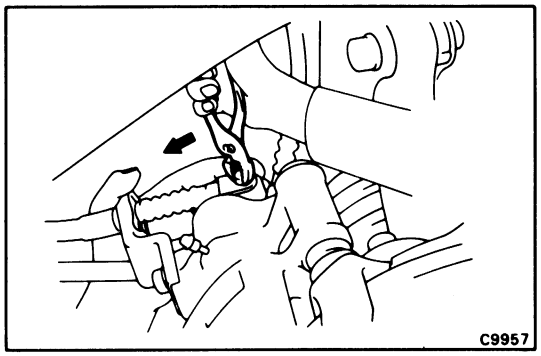

2. DISCONNECT PARKING BRAKE CABLE

(a) Remove the pin clip.

(b) Pull out the hole pin while pushing the parking brake cable.

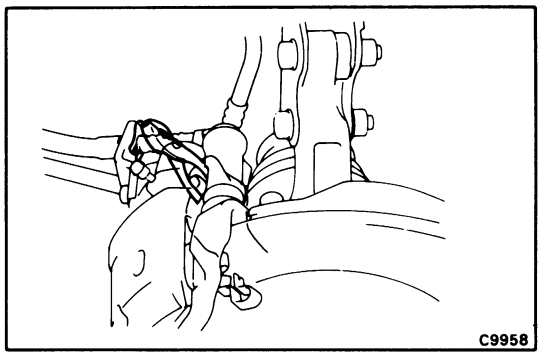

(c) Remove the clip.

(d) Remove the parking brake cable from the cable support bracket.

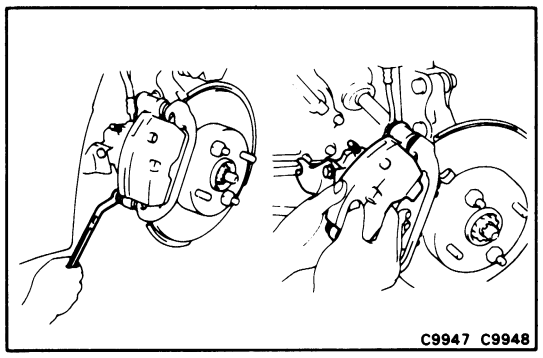

3. REMOVE CYLINDER

Remove the installation bolt, and remove the brake cylinder.

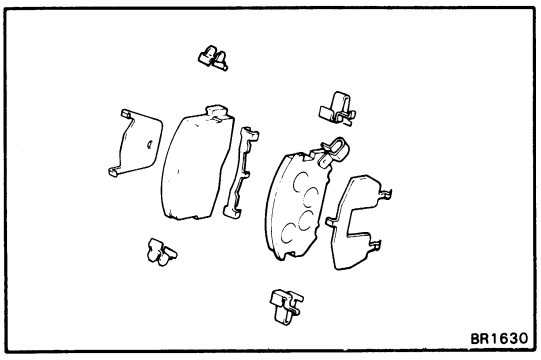

4. REMOVE PADS

(See step 5 on page BR-27)

DISASSEMBLY OF CYLINDER

(See page BR-26)

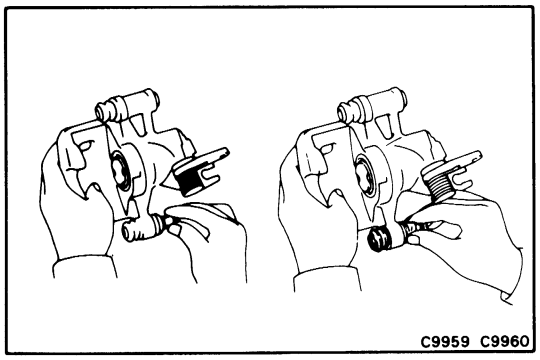

1. REMOVE SLIDING BUSHING AND BOOT

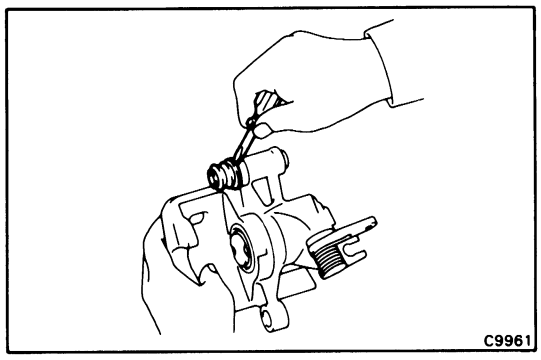

2. REMOVE MAIN PIN BOOT

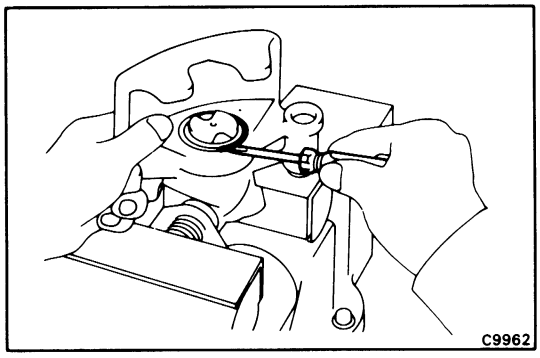

3. REMOVE CYLINDER BOOT SET RING AND CYLINDER BOOT

Using a screwdriver, remove the cylinder boot set ring and cylinder boot.

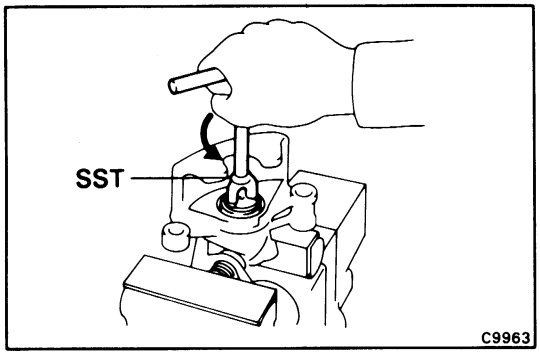

4. REMOVE PISTON FROM CYLINDER

Using SST, turn the piston counterclockwise and remove it.

SST 09719-14020 (09719-00020)

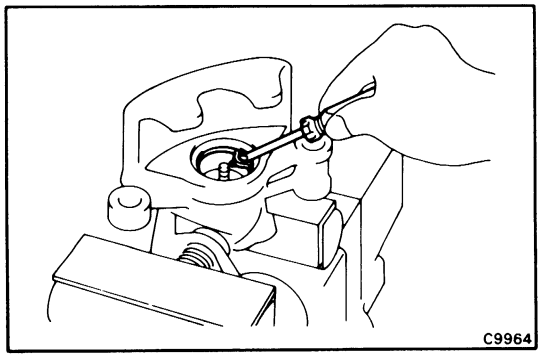

5. REMOVE PISTON SEAL FROM CYLINDER

Using a screwdriver, remove the piston seal.

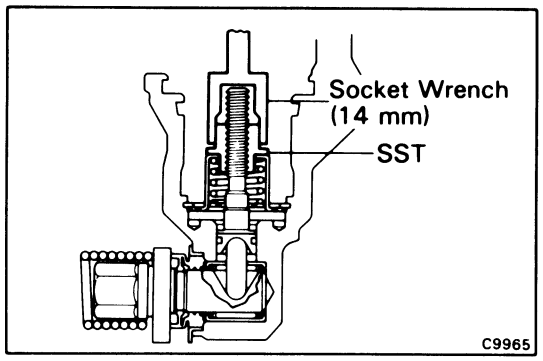

6. REMOVE SNAP RING FROM CYLINDER

(a) Set SST onto the adjusting bolt, and lightly tighten it with a 14 mm socket.

SST 09756-00010

CAUTION:

- **To insure safety, always use SST as there is a possibility of the spring flying out, causing injury or damaging to the interior surface of the cylinder.**
- **Be careful not to tighten the SST too tightly as this may damage the spring retainer.**

(b) Using snap ring pliers, remove the snap ring from the cylinder.

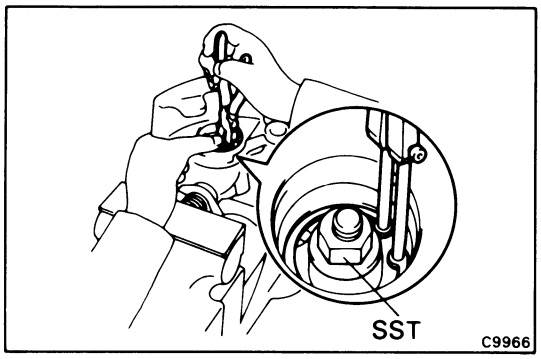

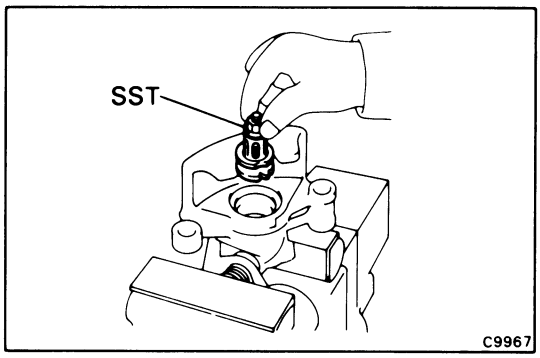

7. REMOVE ADJUSTING BOLT

From the cylinder, pull out the spring retainer, spring, spring plate and stopper together with the adjusting bolt.

CAUTION:

- **Be careful not to pry too hard.**
- **Be careful not to damage the O-ring.**

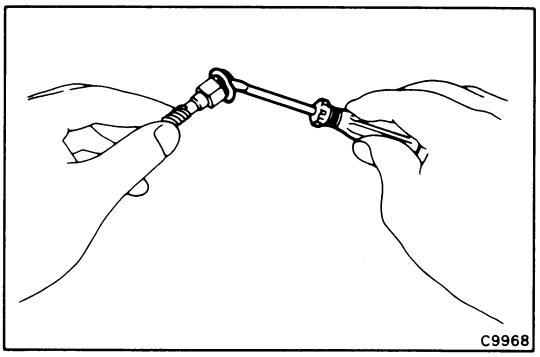

8. DISASSEMBLE ADJUSTING BOLT

(a) Remove SST.

SST 09756-00010

(b) Remove the spring retainer, spring, spring plate and stopper from the adjusting bolt.

(c) Remove the O-ring from the adjusting bolt.

9. REMOVE STRUT

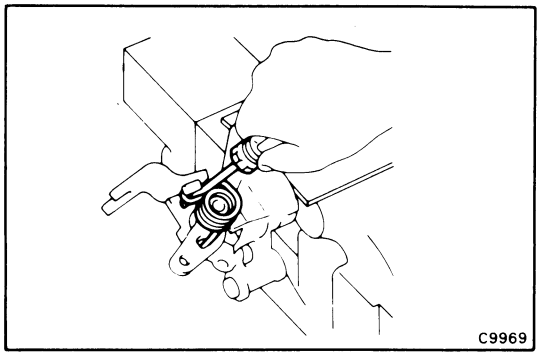

10. REMOVE TORSION SPRING FROM PARKING BRAKE CRANK

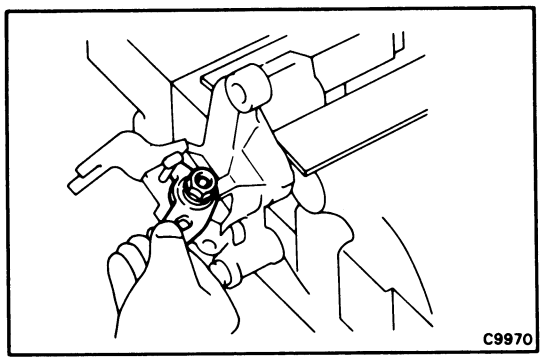

11. REMOVE PARKING BRAKE CRANK FROM CYLINDER

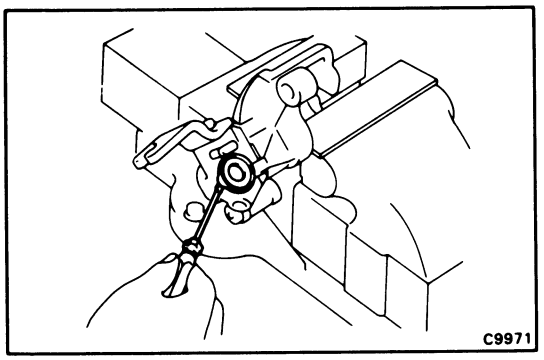

12. REMOVE PARKING BRAKE CRANK BOOT

Using a screwdriver, lightly tap on the metal portion of the boot and remove it.

NOTE: Do not remove the boot unless replacing it.

13. REMOVE CABLE SUPPORT BRACKET

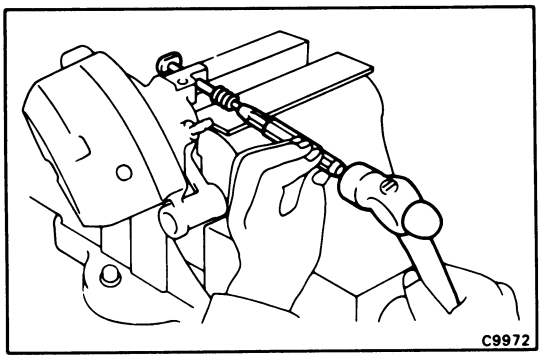

14. REMOVE STOPPER PIN

Using a pin punch, tap out the pin.

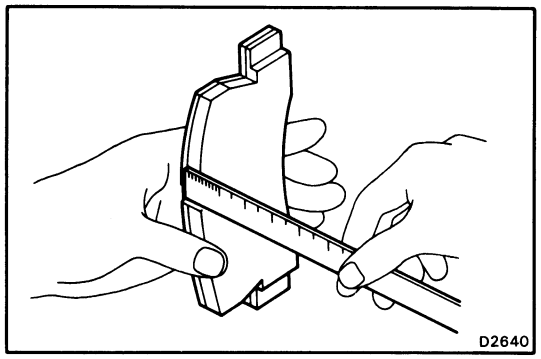

INSPECTION OF REAR BRAKE COMPONENTS

1. MEASURE PAD LINING THICKNESS

Standard thickness: 10.0 mm (0.394 in.)
Minimum thickness: 1.0 mm (0.039 in.)

Replace the pad if the thickness is less than the minimum or if it shows sign of uneven wear.

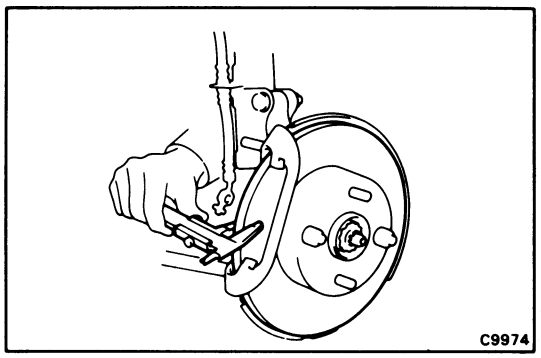

2. MEASURE ROTOR DISC THICKNESS

Standard thickness: 10.0 mm (0.394 in.)
Minimum thickness: 9.0 mm (0.354 in.)

If the disc is scored or worn, or if thickness is less than minimum, repair or replace the disc.

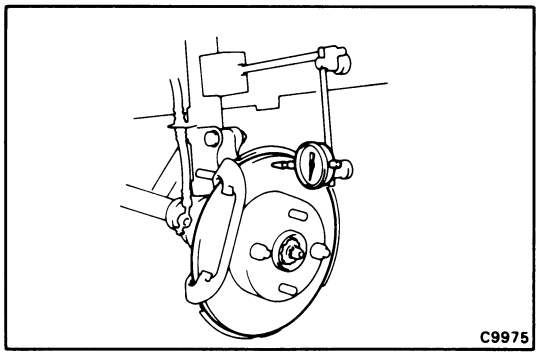

3. MEASURE ROTOR DISC RUNOUT

Measure the rotor disc runout at 10 mm (0.39 in.) from the outer edge of the rotor disc.

Maximum disc runout: 0.15 mm (0.0059 in.)

If the runout is greater than the maximum, replace the disc.

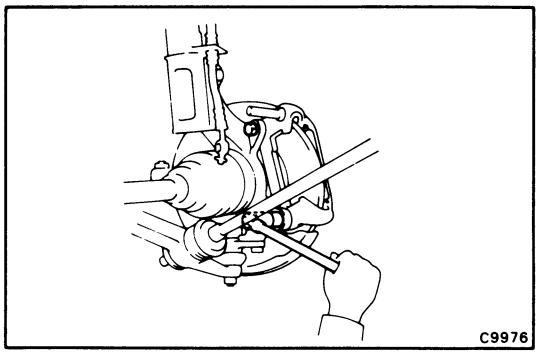

4. IF NECESSARY, REPLACE ROTOR DISC

(a) Remove the disc brake cylinder mounting from the dust cover.

(b) Remove the hub nuts and rotor disc.

(c) Install a new rotor disc and temporarily fasten the disc with hub nuts.

(d) Install the torque plate to the rear axle carrier.

Torque: 600 kg-cm (43 ft-lb, 59 N·m)

ASSEMBLY OF CYLINDER

(See page BR-26)

1. APPLY LITHIUM SOAP BASE GLYCOL GREASE TO PARTS INDICATED BY ARROWS

NOTE: Pack the lithium soap base glycol grease into areas marked "A".

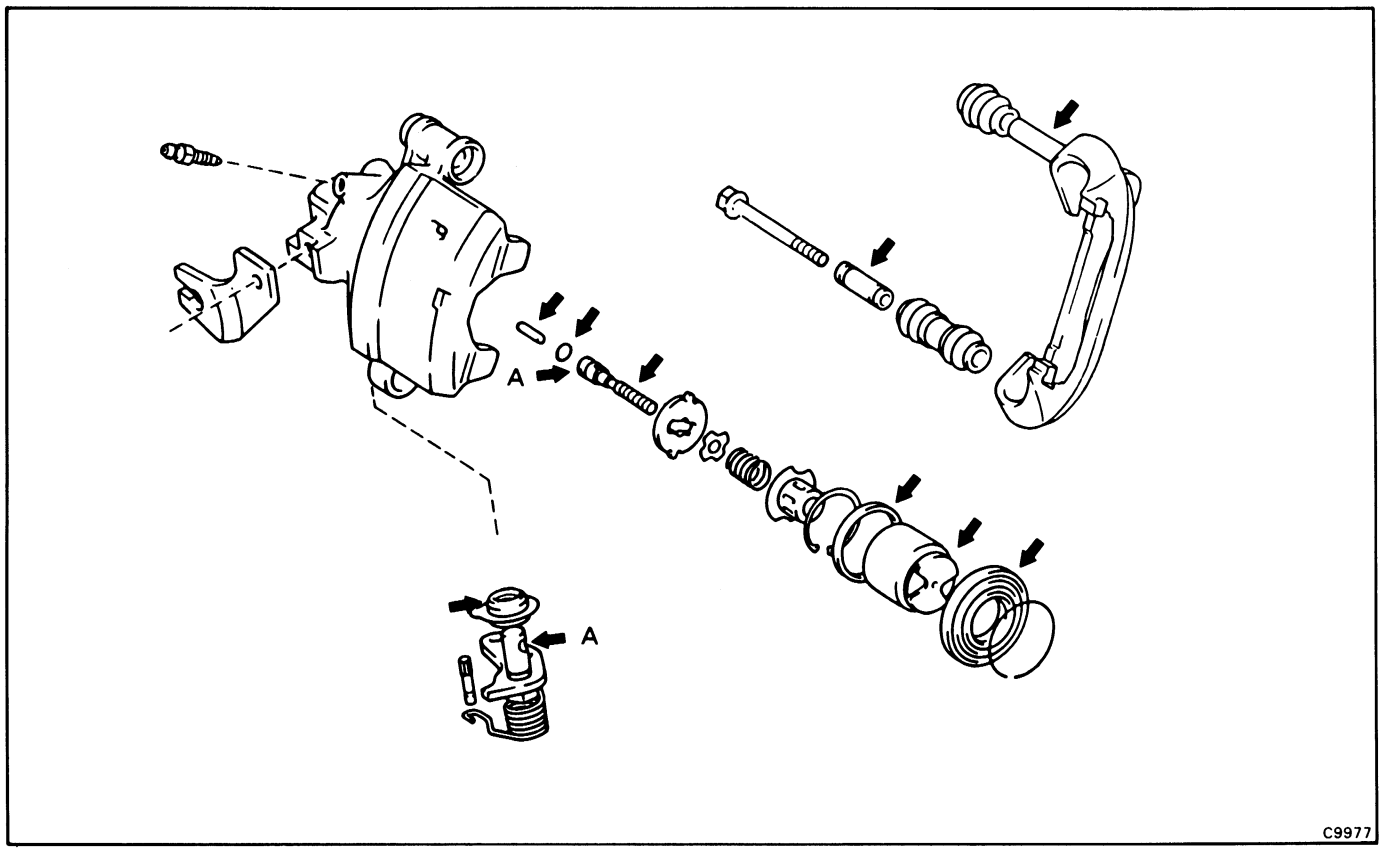

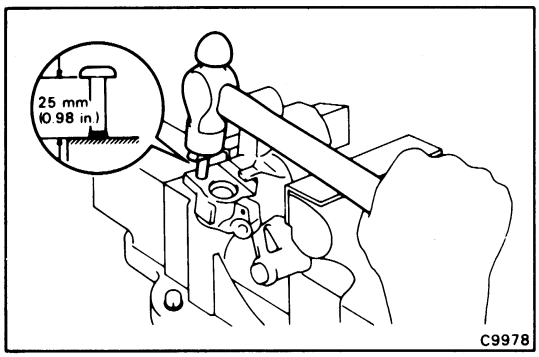

2. INSTALL STOPPER PIN

Tap in the pin to the brake cylinder until the stopper pin extends 25 mm (0.98 in.).

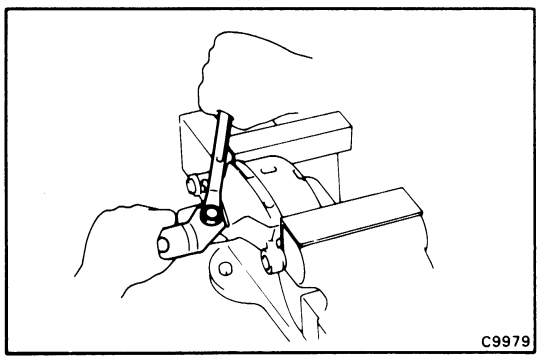

3. INSTALL CABLE SUPPORT BRACKET

Press the surface of the support bracket flush against the cylinder wall and tighten the bolt.

Torque: 475 kg-cm (34 ft-lb, 47 N·m)

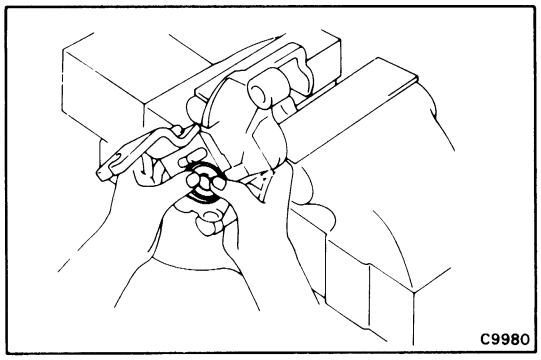

4. INSTALL PARKING BRAKE CRANK BOOT IN CYLINDER

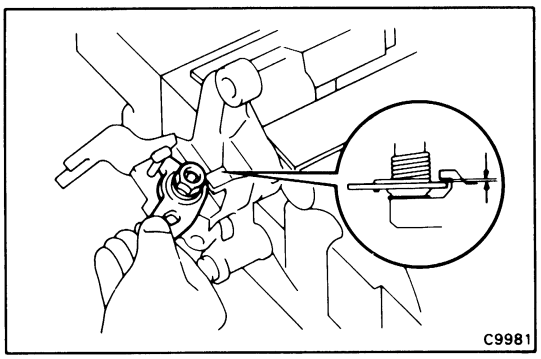

5. INSTALL PARKING BRAKE CRANK IN CYLINDER

CAUTION: Securely match the crank boot with the groove of the crank seal.

6. CHECK THAT THERE IS CLEARANCE AS SHOWN IN FIGURE

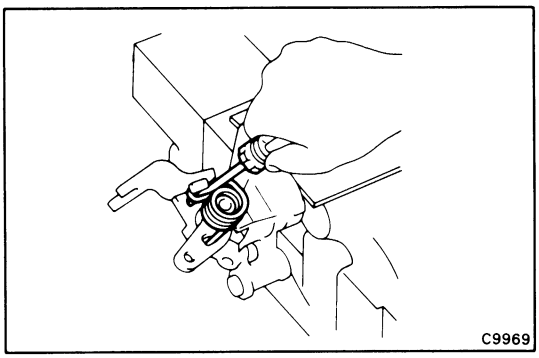

7. INSTALL TORSION SPRING

Install the torsion spring and check that the parking brake crank subassembly is in touch with the stopper pin.

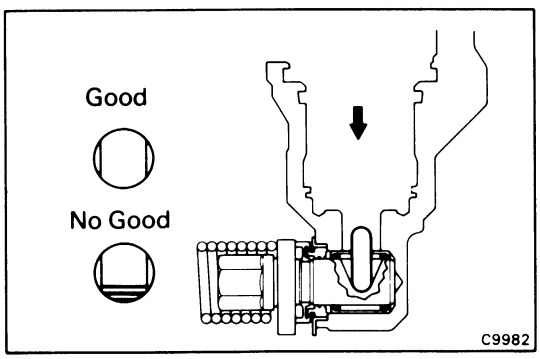

8. INSTALL STRUT

Before installing the strut, adjust the rollers of the needle roller bearing so they do not catch on the cylinder hole.

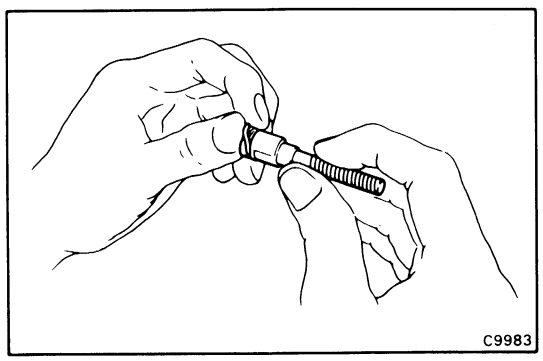

9. INSTALL A NEW O-RING TO ADJUSTING BOLT

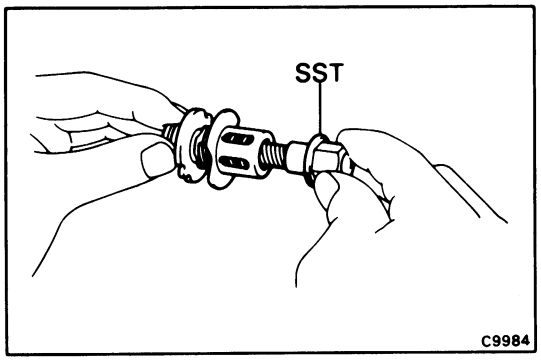

10. ASSEMBLE ADJUSTING BOLT

(a) Assemble the stopper, plate, spring and spring retainer to the adjusting bolt, and using SST, fully tighten them down by hand.

SST 09756-00010

CAUTION:

- **Position the inscribed surface of the stopper upward.**
- **Align the notches of the spring case with the notches of the stopper.**

(b) Install the adjusting bolt subassembly into the cylinder.

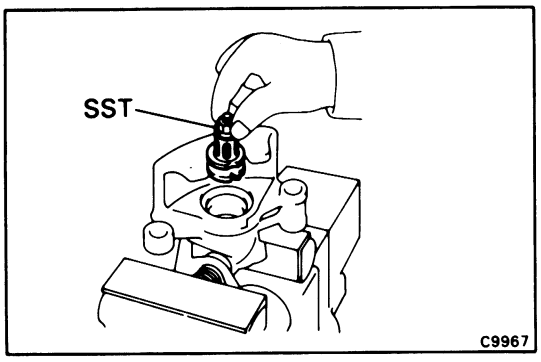

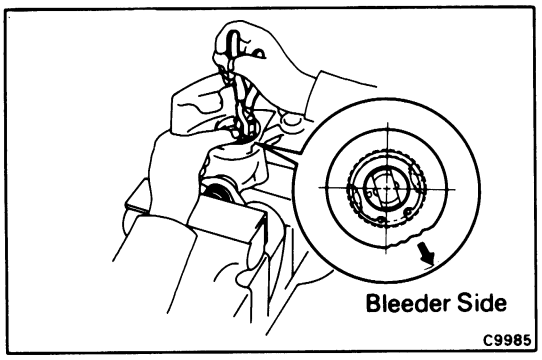

11. INSTALL SNAP RING

(a) Using snap ring pliers, install the snap ring.

NOTE: Face the snap ring opening toward the bleeder side.

(b) Remove the SST.

SST 09756-00010

(c) Firmly pull up the adjusting bolt by hand and insure that it does not move.

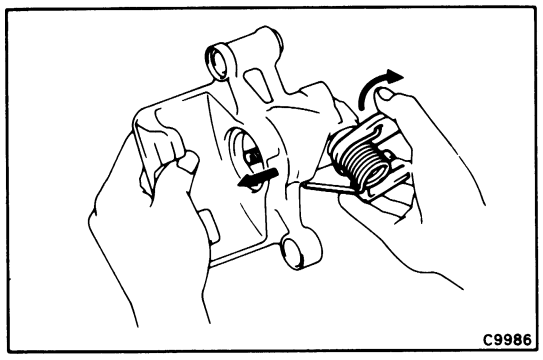

12. PERFORM OPERATIONAL CHECK

After performing steps 1 to 11, move the parking brake crank by hand and insure that the adjusting bolt moves smoothly.

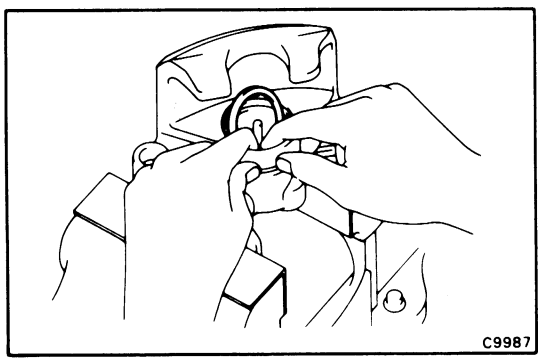

13. INSTALL PISTON SEAL IN CYLINDER

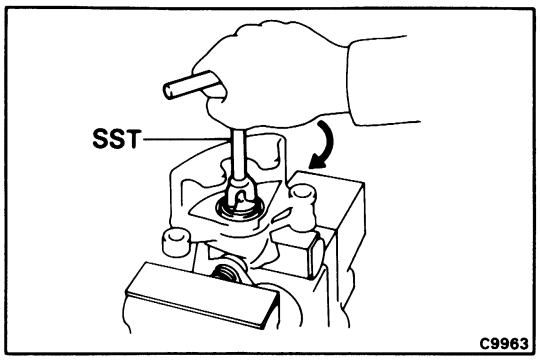

14. ASSEMBLE PISTON IN CYLINDER

(a) Using SST, slowly screw in the piston clockwise until it will not descend any further.

SST 09719-14020 (09719-00020)

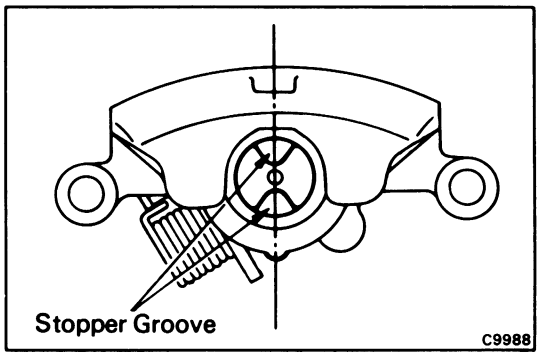

(b) Align the center of the piston stopper groove with the positioning protrusion of the cylinder.

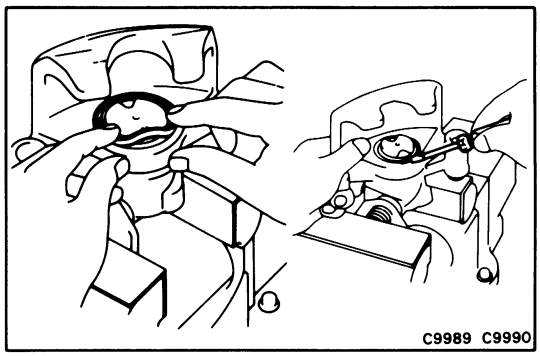

15. INSTALL CYLINDER BOOT AND SET RING IN CYLINDER

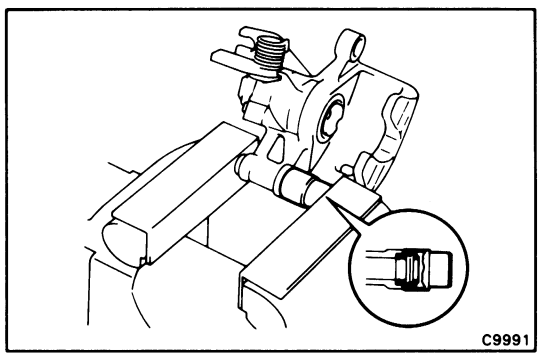

16. INSTALL MAIN PIN BOOT

Using a 21 mm socket wrench, press in a new boot.

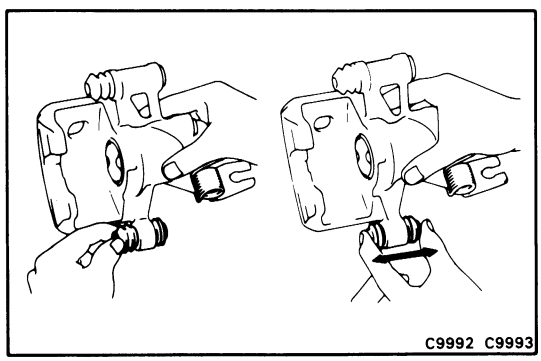

17. INSTALL DUST BOOT AND SLIDING BUSHING

(a) Install the dust boot.

NOTE: Be careful that the seal does not fold under.

(b) Install the bushing into the boot, with the flange facing inside.

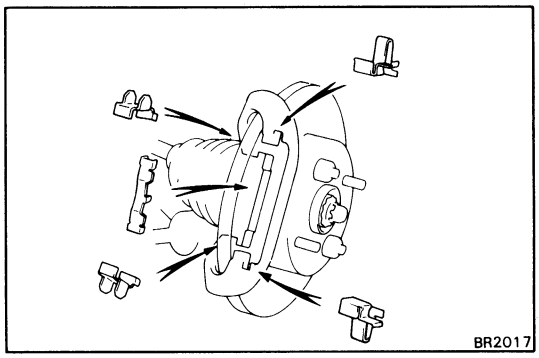

INSTALLATION OF CYLINDER

(See page BR-26)

1. INSTALL PAD SUPPORT PLATE, ANTI-RATTLE SPRINGS AND PAD GUIDE PLATES
(See page BR-27)

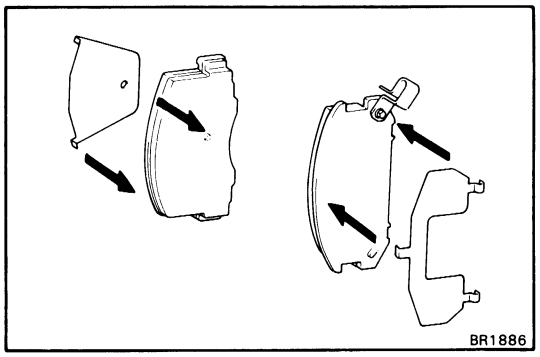

2. INSTALL PADS AND ANTI-SQUEAL SHIMS

(a) Install the anti-squeal shims to the pads.

(b) Install the pads to the cylinder mounting.

CAUTION: Do not allow oil or grease to get on the rubbing face.

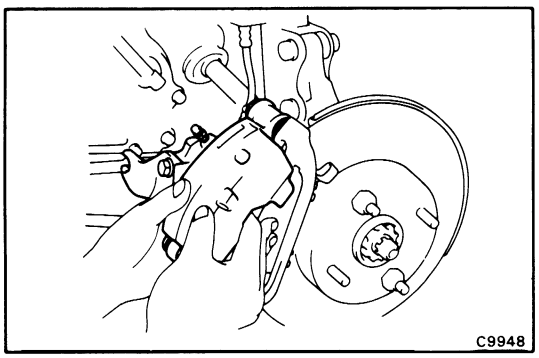

3. INSTALL CYLINDER

(a) Install the cylinder onto the main pin.

NOTE: Make sure that the boot end is installed into the groove of the main pin.

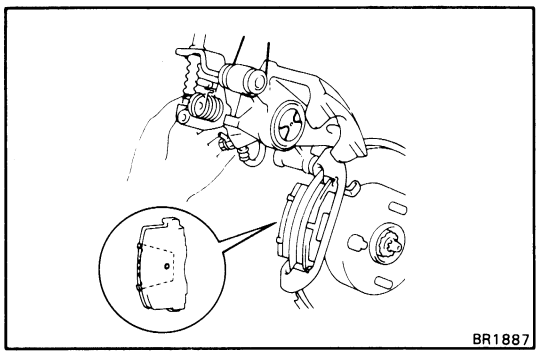

(b) Fit the pad protrusion into the piston stopper groove, and install the cylinder.

NOTE: Insert the cylinder carefully so the boot is not wedged.

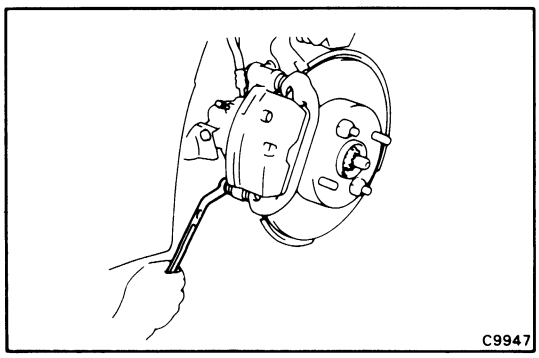

4. INSTALL CYLINDER INSTALLATION BOLT

Install the cylinder installation bolt and torque the bolt.

Torque: 200 kg-cm (14 ft-lb, 20 N·m)

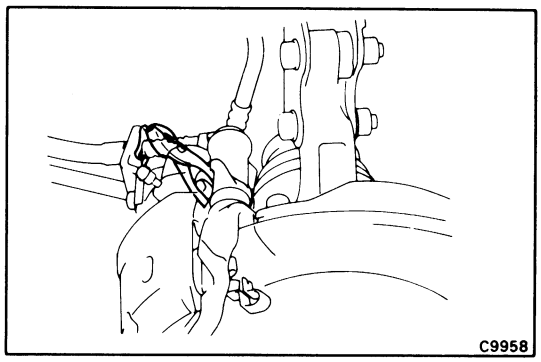

5. CONNECT PARKING BRAKE CABLE

(a) Install the parking brake cable to the cable support bracket and install the retainer.

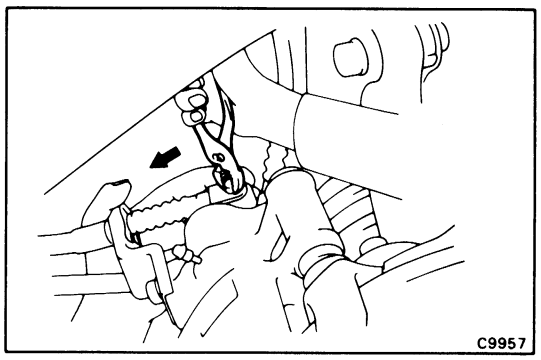

(b) Install the hole pin while pushing the parking brake lever, and install the new clip.

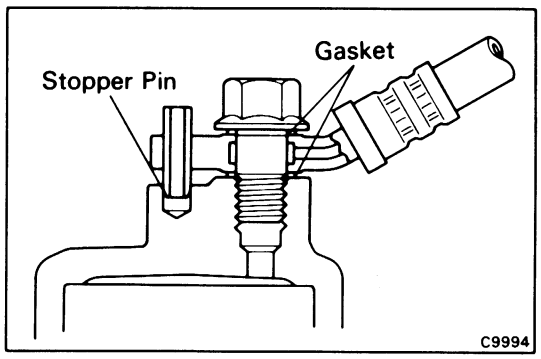

6. CONNECT BRAKE HOSE

Install the brake hose and new gaskets in position, and tighten the union bolt.

Torque: 310 kg-cm (22 ft-lb, 30 N·m)

7. FILL BRAKE RESERVOIR WITH BRAKE FLUID AND BLEED BRAKE SYSTEM (See page BR-6)

8. CHECK FOR FLUID LEAKAGE

9. ADJUST REAR BRAKE

Depress the brake pedal several times and adjust the rear brake automatically.

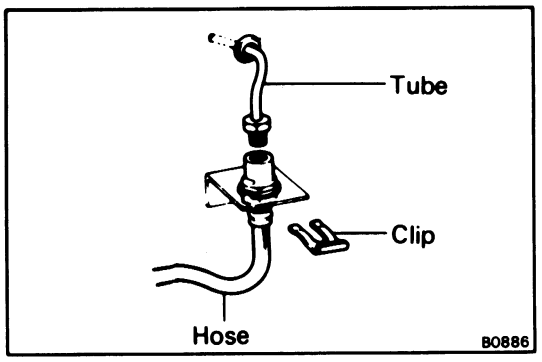

BRAKE HOSES AND TUBES

DISCONNECT AND CONNECT HOSE AND TUBE

1. DISCONNECT HOSE AND TUBE

(a) Remove the clip.

(b) Using a wrench to hold the hose and SST to hold the tube, disconnect the tube and hose.

SST 09751-36011

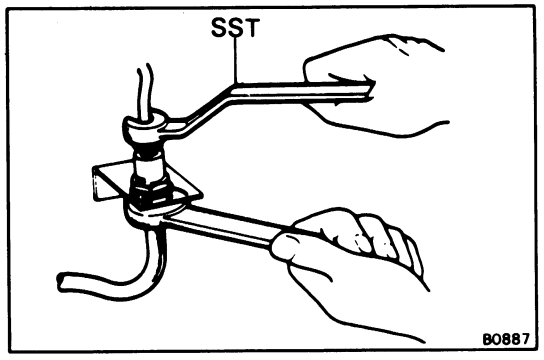

2. CONNECT HOSE AND TUBE

(a) Connect the hose and tube by hand.

(b) Using a wrench to hold the hose and SST to hold the tube, torque the connection.

SST 09751-36011

Torque: 155 kg-cm (11 ft-lb, 15 N·m)

(c) Install a hose clip.

INSPECTION OF BRAKE HOSES AND TUBES

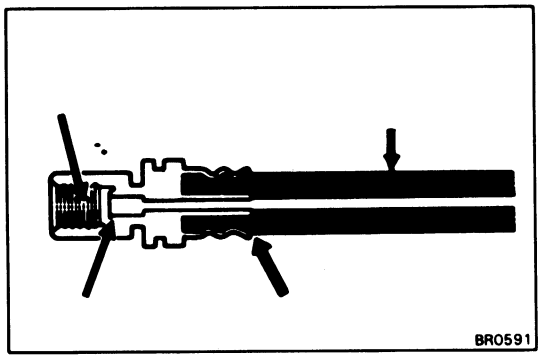

1. INSPECT BRAKE HOSES

(a) Inspect the hose for damage, cracks or swelling.

(b) Inspect the threads for damage.

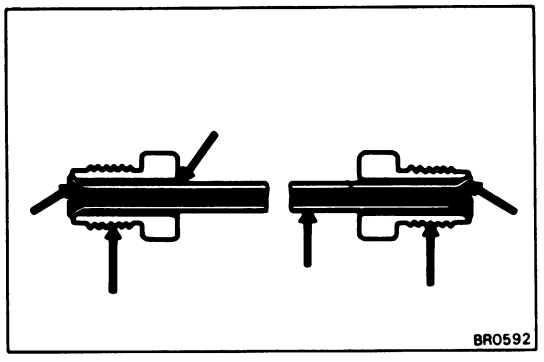

2. INSPECT BRAKE TUBES

(a) Inspect the tube for damage, cracks, dents or corrosion.

(b) Inspect the threads for damage.

STEERING

	Page
PRECAUTIONS	SR-2
TROUBLESHOOTING	SR-2
ON-VEHICLE INSPECTION	SR-3
STEERING COLUMN ASSEMBLY	SR-3
STEERING GEAR HOUSING	SR-14

PRECAUTIONS

Care must be taken to replace parts properly because they could affect the performance of the steering system and result in a driving hazard.

TROUBLESHOOTING

Problem	Possible cause	Remedy	Page
Hard steering	Tires improperly inflated	Inflate tires to proper pressure	FA-3
	Insufficient lubricant	Lubricate suspension and steering linkage	
	Excessive caster	Check front wheel alignment	FA-3
	Steering system joint worn	Replace steering system joints	SR-14
	Lower arm ball joints worn	Replace lower arm ball joints	FA-20
	Steering column binding	Inspect steering column	SR-3
	Steering gear out of adjustment or broken	Adjust or repair steering gear	SR-14
Poor return	Tires improperly inflated	Inflate tires to proper pressure	FA-3
	Insufficient lubricant	Lubricate suspension and steering linkage	
	Wheel alignment incorrect	Check front wheel alignment	FA-3
	Steering column binding	Inspect steering column	SR-3
	Steering gear out of adjustment or broken	Adjust or repair steering gear	SR-14
Excessive play	Front wheel bearing worn	Replace front wheel bearing	FA-7
	Main shaft yoke or intermediate shaft yoke worn	Replace main shaft or intermediate shaft	
	Lower arm ball joints worn	Replace lower arm ball joints	FA-20
	Steering system joints worn	Replace steering system joints	SR-14
	Steering gear out of adjustment or broken	Adjust or repair steering gear	SR-14
Abnormal noise	Steering linkage loose	Tighten steering linkage	
	Steering system joints worn	Replace steering system joints	SR-14
	Steering gear out of adjustment or broken	Adjust or repair steering gear	SR-14

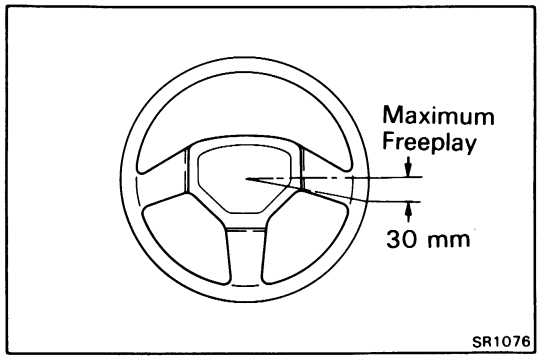

ON-VEHICLE INSPECTION

1. CHECK THAT STEERING WHEEL FREEPLAY IS CORRECT

With the vehicle stopped and pointed straight ahead, rock the steering wheel gently back and forth with light finger pressure. Freeplay should not exceed the maximum limit.

Maximum freeplay: 30 mm (1.18 in.)

If excessive, repair.

2. CHECK STEERING LINKAGE AND GEAR HOUSING

(a) Check the steering linkage for looseness or damage. Also check that:

- The tie rod ends do not have excessive play.
- The boots are not damaged.
- The boot clamps are not loose.

(b) Check gear housing for grease leakage or oozing.

STEERING COLUMN ASSEMBLY

REMOVAL OF STEERING COLUMN ASSEMBLY

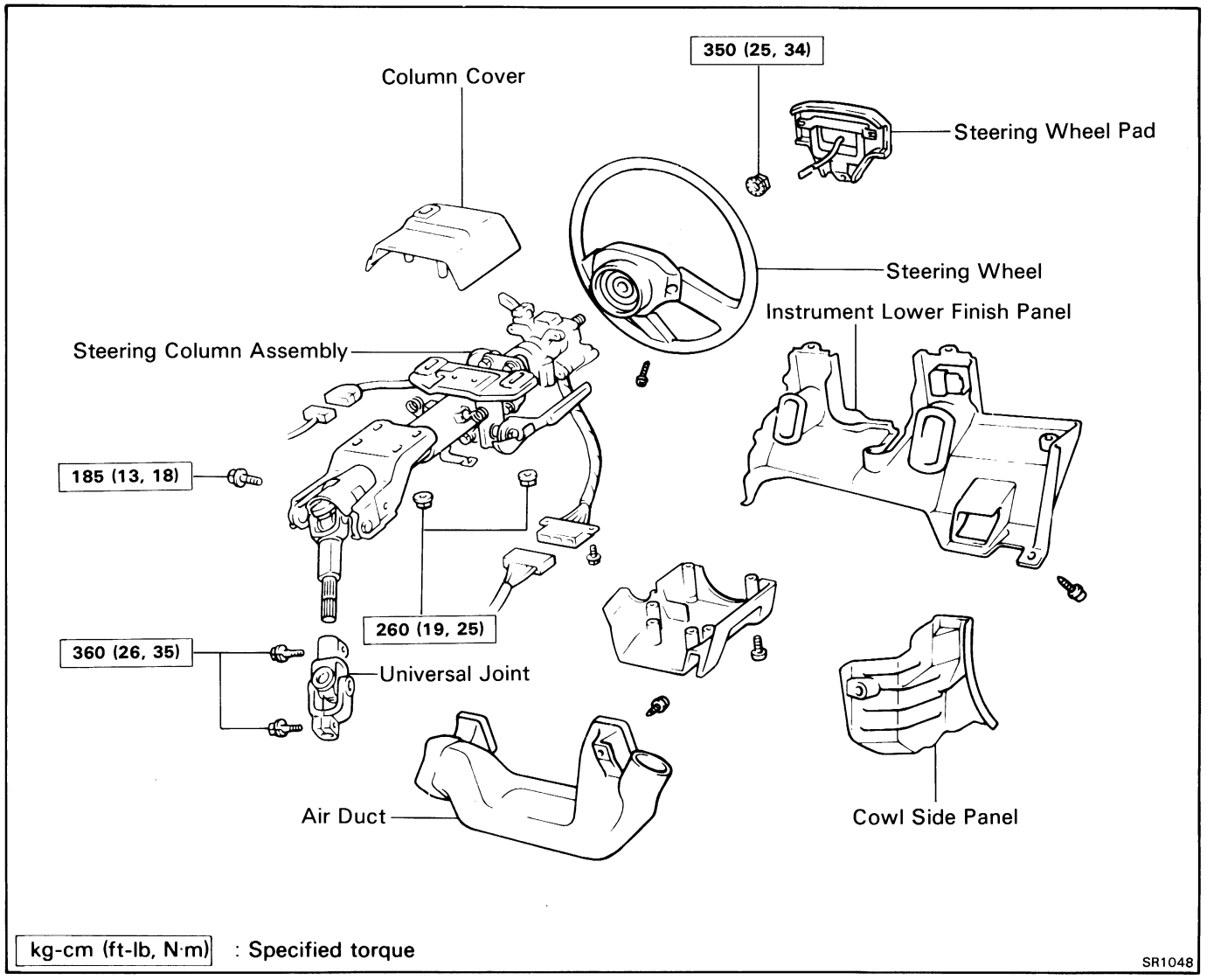

1. DISCONNECT NEGATIVE CABLE FROM BATTERY

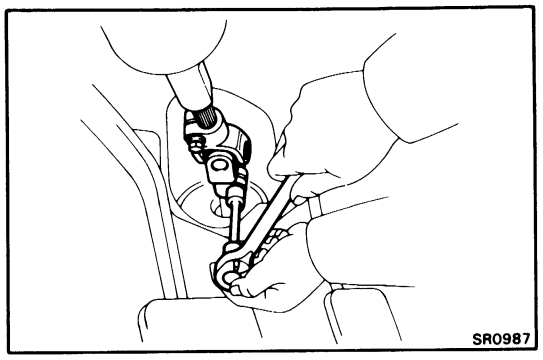

2. REMOVE UNIVERSAL JOINT

(a) Place matchmarks on the main shaft and joint yoke.

(b) Place matchmarks on the joint yoke and pinion shaft.

(c) Remove the two bolts.

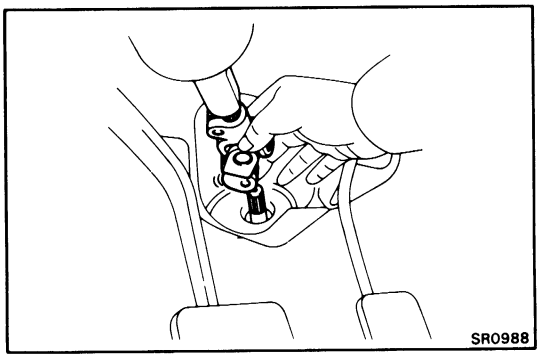

(d) First pull the universal joint from the gear housing, and then pull it out from the main shaft.

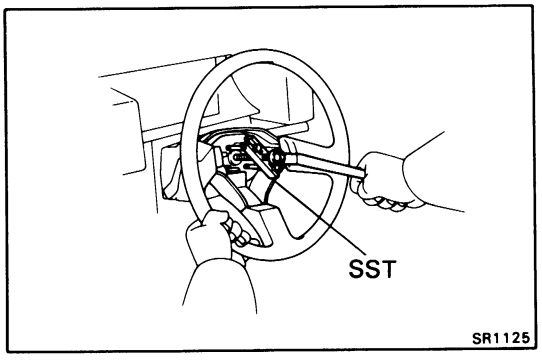

3. REMOVE STEERING WHEEL

(a) Remove the screw and disconnect the horn connector.

(b) Pull up and remove the wheel pad.

(c) Remove the steering wheel nut.

(d) Place matchmarks on the main shaft and steering wheel.

(e) Using SST, remove the steering wheel.

SST 09609-20011

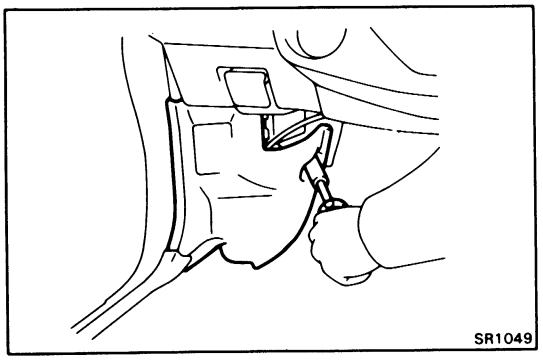

4. REMOVE FOLLOWING PARTS:

(a) Scuff plate

(b) Cowl side panel LH

(c) Instrument lower finish panel

(d) Air duct

(e) Column lower cover

5. DISCONNECT IGNITION SWITCH CONNECTOR AND COMBINATION SWITCH CONNECTOR

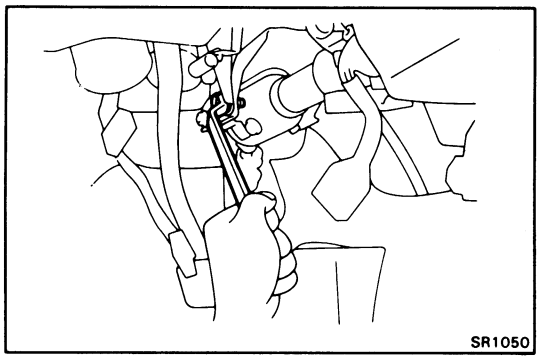

6. REMOVE PEDAL BRACKET STAY BOLT

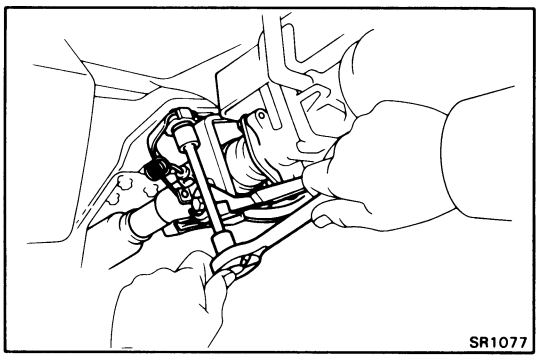

7. REMOVE STEERING COLUMN ASSEMBLY WITH COLUMN UPPER COVER

Remove the six nuts and steering column assembly.

COMPONENTS

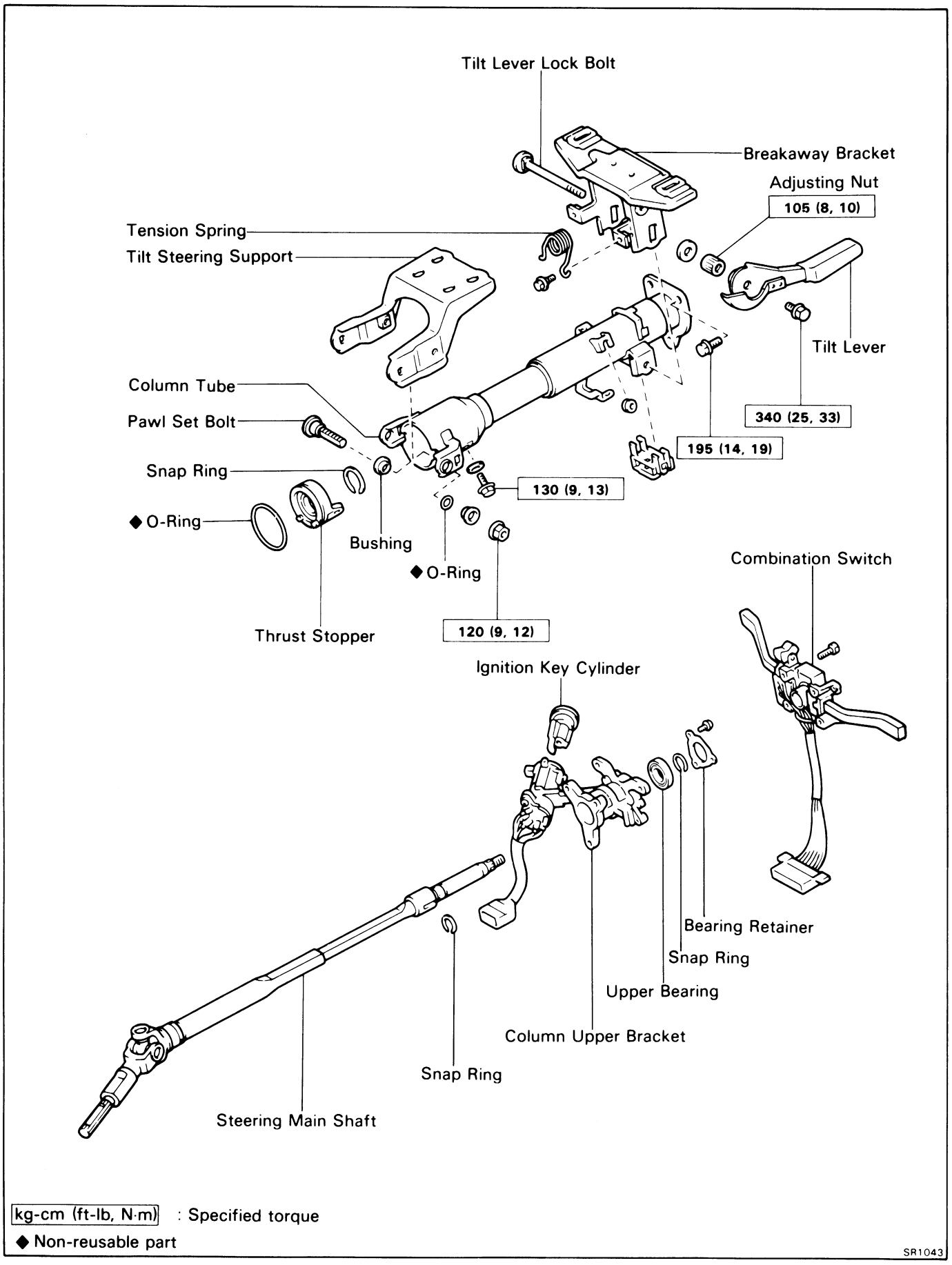

kg-cm (ft-lb, N·m) : Specified torque

◆ Non-reusable part

SR1043

DISASSEMBLY OF STEERING COLUMN ASSEMBLY

1. REMOVE COMBINATION SWITCH

(a) Remove the clamp.

(b) Remove the two screws from the connector.

(c) Remove the four screws and combination switch.

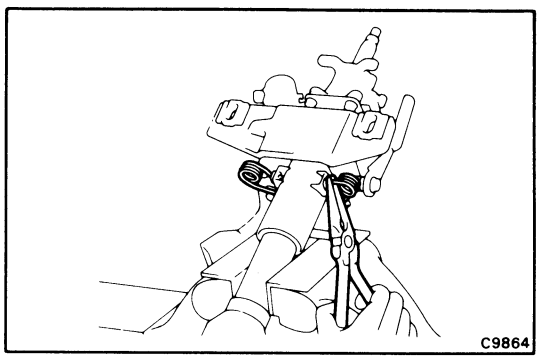

2. REMOVE TENSION SPRINGS AND GROMMETS

(a) Pull down the tension springs, and remove the grommets.

(b) Remove the bolts and springs.

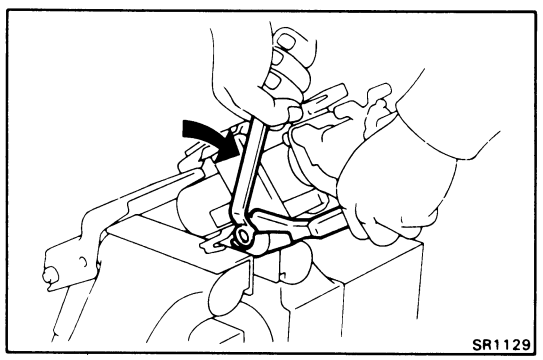

3. REMOVE BREAKAWAY BRACKET

(a) Remove the set bolt and tilt lever.

NOTE: The bolt has LH threads.

(b) Remove the adjusting nut and washer, and pull out the lock bolt.

(c) Remove the two screws and breakaway bracket.

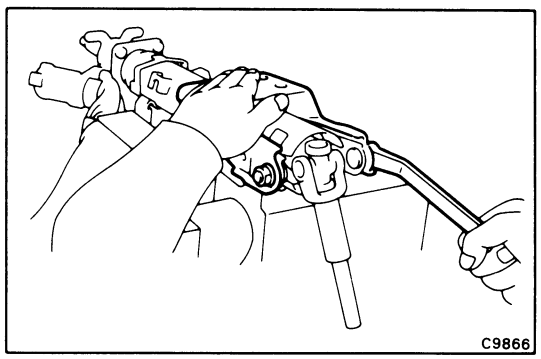

4. REMOVE TILT STEERING SUPPORT

(a) Remove the two nuts and the pawl set bolts.

(b) Remove the bushings, O-rings and tilt steering support.

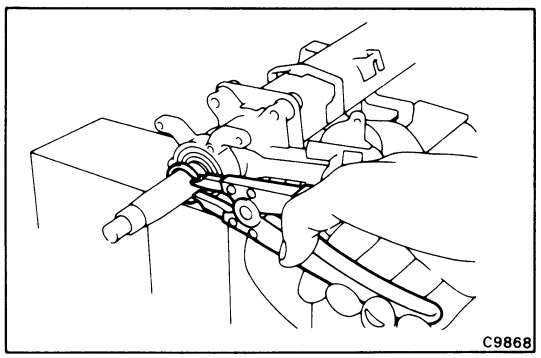

5. REMOVE UPPER BRACKET FROM MAIN SHAFT

(a) Remove the three screws and retainer from the upper bracket.

(b) Using snap ring pliers, remove the snap ring.

(c) Release the steering lock.

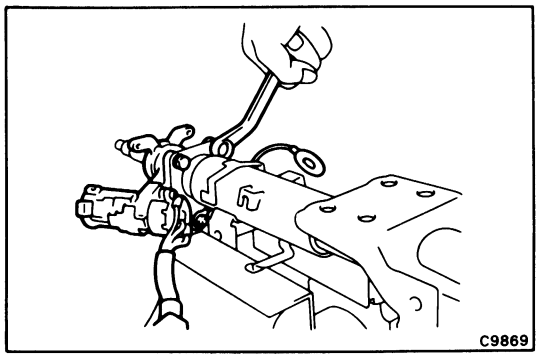

(d) Loosen the broken down bolt by tapping the chisel.

(e) Remove the three bolts, and separate the upper bracket and column tube.

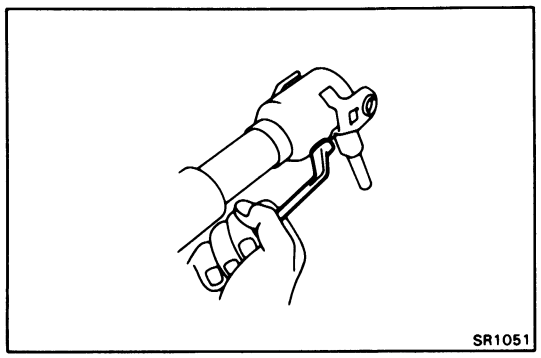

6. REMOVE MAIN SHAFT FROM COLUMN TUBE

(a) Remove the two bolts.

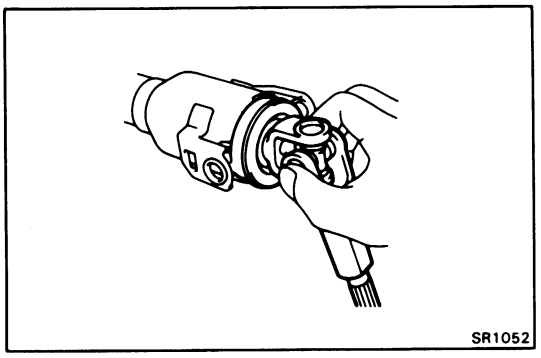

(b) Pull out the main shaft from the column tube.

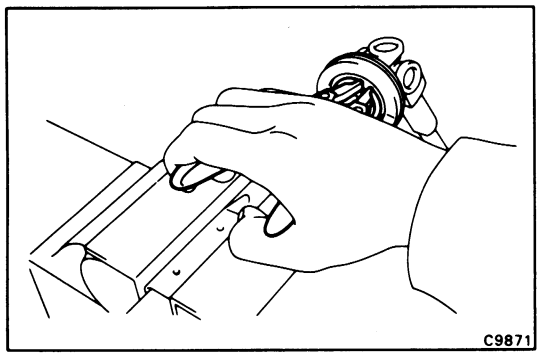

7. REMOVE THRUST STOPPER ASSEMBLY

(a) Using snap ring pliers, remove the snap ring.

(b) Remove the thrust stopper assembly.

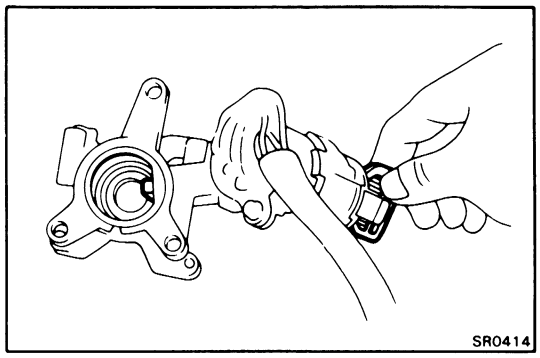

INSPECTION AND REPAIR OF STEERING COLUMN ASSEMBLY

1. INSPECT UPPER BRACKET

(a) Check that the steering lock mechanism operates properly.

(b) Check the upper bearing rotation condition and check for abnormal noise.

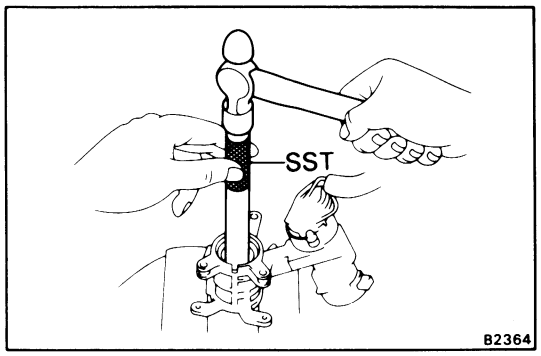

2. IF NECESSARY, REPLACE UPPER BEARING

(a) Using SST, tap out the bearing.

SST 09620-30010 (09631-00020, 09627-30010)

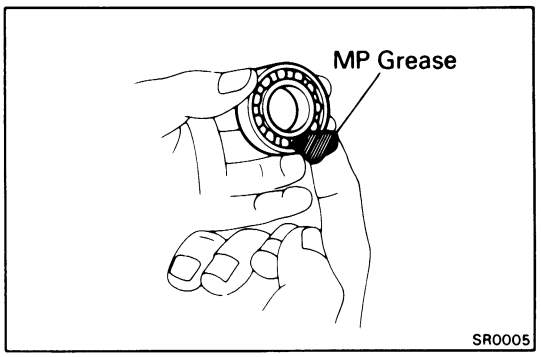

(b) Pack a new bearing with MP grease.

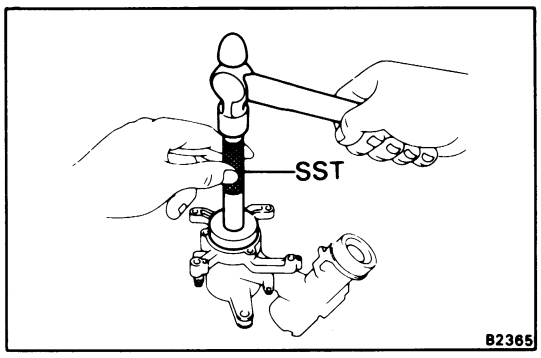

(c) Using SST, tap in the new bearing.

SST 09620-30010 (09631-00020, 09625-30010)

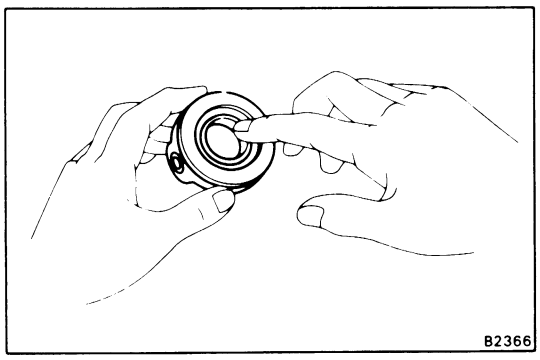

3. INSPECT LOWER BEARING

Check the bearing rotation condition and check for abnormal noise.

If faulty, replace the thrust stopper assembly.

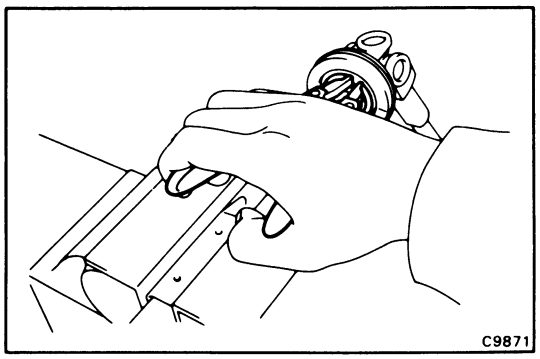

ASSEMBLY OF STEERING COLUMN ASSEMBLY

(See page SR-6)

1. INSTALL THRUST STOPPER ASSEMBLY

(a) Install the thrust stopper assembly.

(b) Using snap ring pliers, install the snap ring.

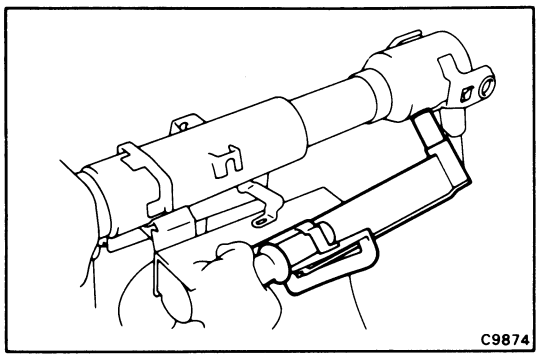

2. INSTALL MAIN SHAFT TO COLUMN TUBE

(a) Apply molybdenum disulphide lithium base grease to the thrust stopper.

(b) Install the main shaft and torque the bolts.

Torque: 130 kg-cm (9 ft-lb, 13 N·m)

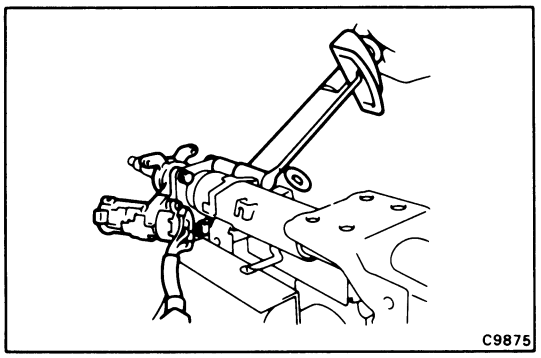

3. INSTALL UPPER BRACKET TO MAIN SHAFT

(a) Release the steering lock.

(b) Install the upper bracket.

(c) Torque the three bolts.

Torque: 195 kg-cm (14 ft-lb, 19 N·m)

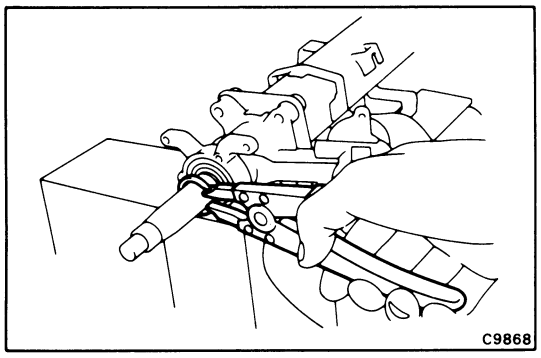

(d) Using snap ring pliers, install the snap ring.

(e) Install the retainer to the upper bracket with the three screws.

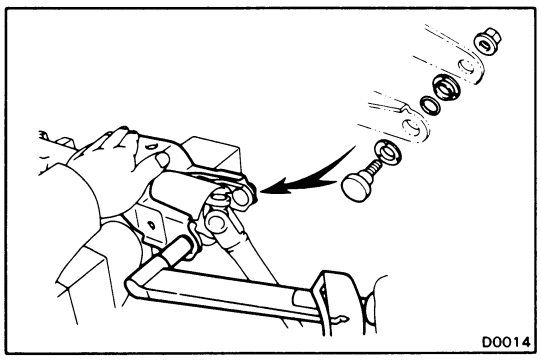

4. INSTALL TILT STEERING SUPPORT

(a) Apply molybdenum disulphide lithium base grease to the bushings, O-rings and install the two bushings to the column tube.

(b) Install the tilt steering support and pawl set bolts with bushings and O-rings.

NOTE: Be careful not to damage the bushing and O-ring.

(c) Torque the nuts.

Torque: 120 kg-cm (9 ft-lb, 12 N·m)

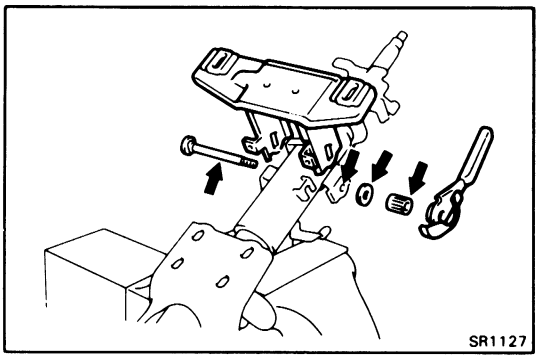

5. INSTALL BREAKAWAY BRACKET

(a) Apply molybdenum disulphide lithium base grease to the portions indicated by the arrows.

(b) Install the breakaway bracket, two screws and lock bolt.

(c) Install the washer and adjusting nut, and tighten the nut by the tilt lever.

Torque: 105 kg-cm (8 ft-lb, 10 N·m)

NOTE: The adjusting nut has LH threads.

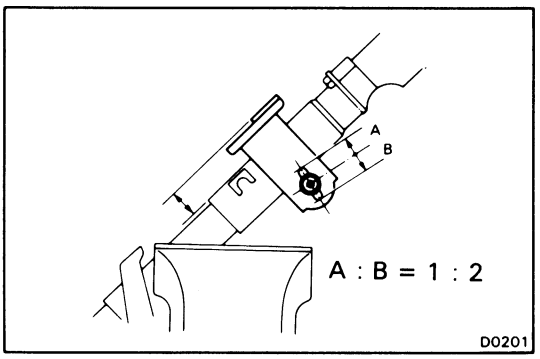

(d) Adjust the lock bolt so that it is positioned 2/3 of the way up the oval hole on the bracket. Then align the top surface of the bracket with the surface of the column in parallel.

(e) Tighten the adjusting nut onto the tilt lever.

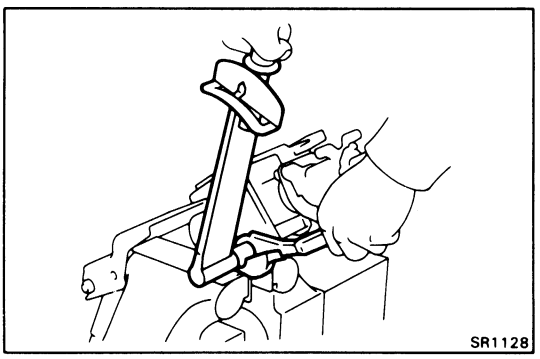

(f) Place the tilt lever in position and torque the set bolt.

Torque: 340 kg-cm (25 ft-lb, 33 N·m)

NOTE: The bolt has LH threads.

Do not move the tilt lever before installing the steering column.

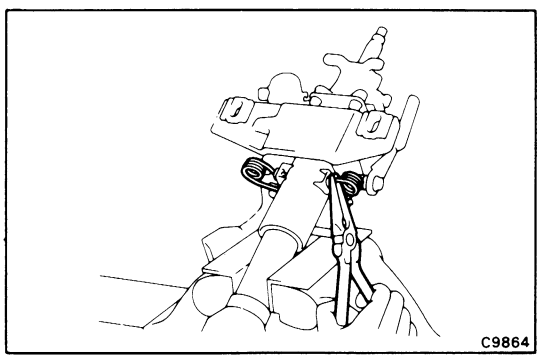

6. INSTALL TENSION SPRINGS AND GROMMETS

(a) Install the bolt with spring to the bracket.

(b) Install the grommet into the bracket.

(c) Hook the spring into the grommet.

7. INSTALL COMBINATION SWITCH

(a) Install the combination switch with four screws.

(b) Install the connector with two screws.

(c) Install the clamp.

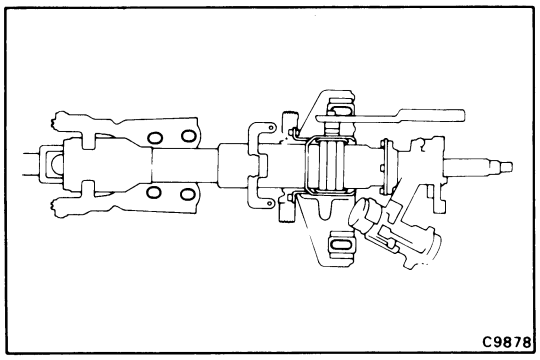

INSTALLATION OF STEERING COLUMN ASSEMBLY

(See page SR-3)

1. PLACE STEERING COLUMN ASSEMBLY IN INSTALLED POSITION

(a) Place the steering column assembly with the column upper cover and temporarily tighten support nuts and bracket nuts.

(b) Position the steering column assembly so the ends of lower support holes and mounting bolts touch.

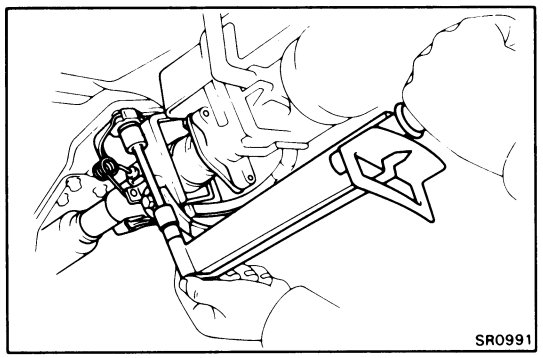

2. TORQUE TILT STEERING SUPPORT NUTS AND BREAKAWAY BRACKET NUTS

Torque the support nuts and bracket nuts.

Torque: 260 kg-cm (19 ft-lb, 25 N·m)

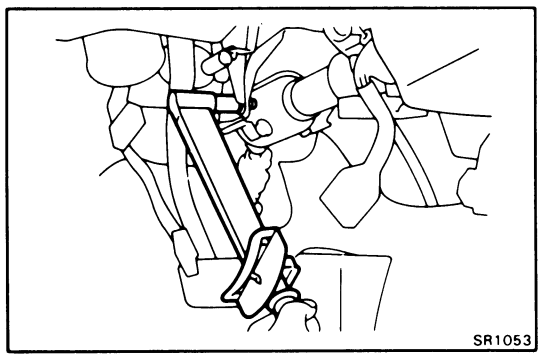

3. INSTALL PEDAL BRACKET STAY BOLT

Install and torque the bolt.

Torque: 185 kg-cm (13 ft-lb, 18 N·m)

4. CONNECT IGNITION SWITCH CONNECTOR AND COMBINATION SWITCH CONNECTOR

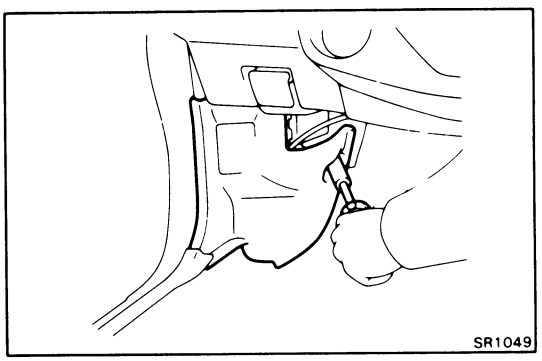

5. INSTALL FOLLOWING PARTS:

(a) Column lower cover

(b) Air duct

(c) Instrument lower finish panel

(d) Cowl side panel LH

(e) Scuff plate

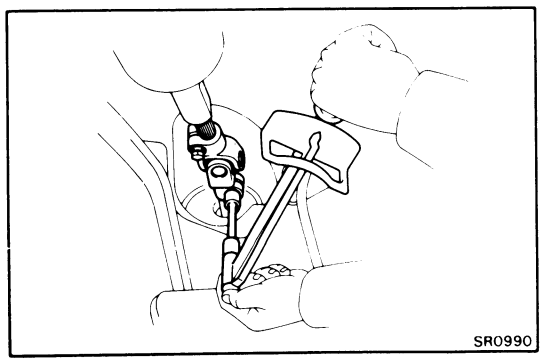

6. INSTALL UNIVERSAL JOINT

(a) Align matchmarks on the main shaft, universal joint and pinion shaft.

(b) Install and torque the two bolts.

Torque: 360 kg-cm (26 ft-lb, 35 N·m)

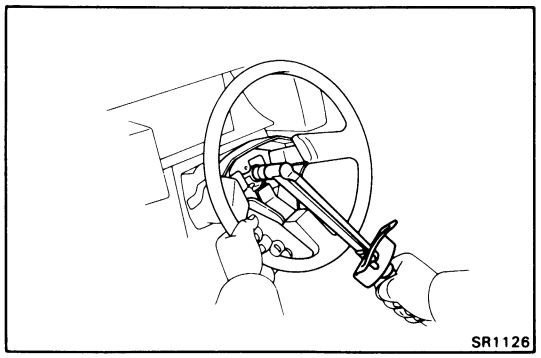

7. INSTALL STEERING WHEEL

(a) Align matchmarks on the main shaft and steering wheel, and install them.

(b) Check the steering wheel center point.

(c) Install and torque the steering wheel nut.

Torque: 350 kg-cm (25 ft-lb, 34 N·m)

(d) Connect the horn connector and push in the wheel pad.

(e) Tighten the screw.

8. CONNECT NEGATIVE CABLE TO BATTERY

STEERING GEAR HOUSING

REMOVAL OF GEAR HOUSING

Universal Joint
360 (26, 35)
Column Hole Cover Shield
500 (36, 49)
◆ Cotter Pin
Steering Gear Assembly
Grommet
Rack Housing Bracket
500 (36, 49)
440 (32, 43)
440 (32, 43)
◆ Cotter Pin
Crossmember
260 (19, 25)

kg-cm (ft-lb, N·m) : Specified torque
◆ Non-reusable part

SR1037

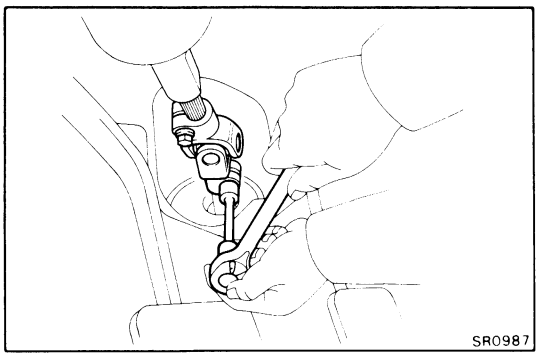

1. **REMOVE UNIVERSAL JOINT**
   (a) Place matchmarks on the main shaft, joint yoke and pinion shaft.
   (b) Remove the two bolts.
   (c) First pull the universal joint from the gear housing. Then pull it out from the main shaft.

2. **REMOVE FRONT WHEEL**

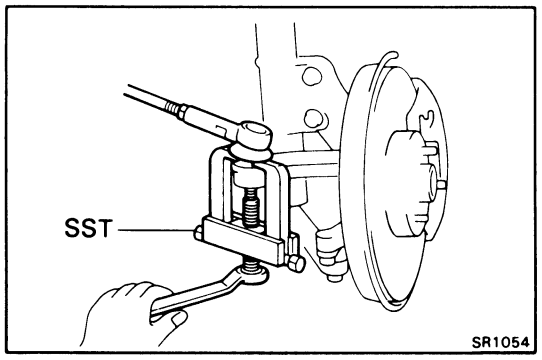

3. DISCONNECT TIE ROD ENDS

(a) Remove the cotter pin and nut holding the knuckle arm to the tie rod.

(b) Using SST, disconnect the knuckle arm from the tie rod end.

SST 09628-62011

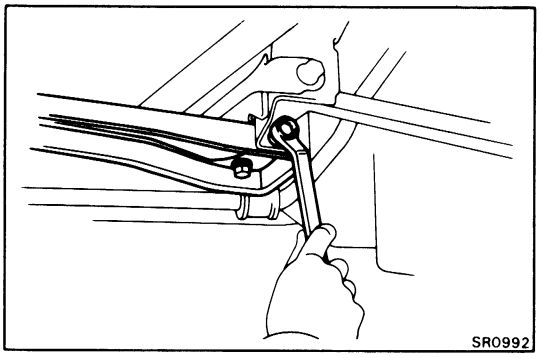

4. REMOVE CENTER FLOOR CROSSMEMBER

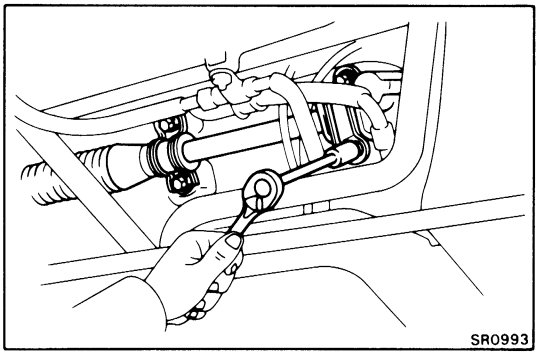

5. REMOVE GEAR HOUSING ASSEMBLY

(a) Remove the gear housing bracket set bolts.

(b) Remove the gear housing assembly.

COMPONENTS

★ Adjusting Screw Lock Nut
1,150 (83, 113)
* 930 (67, 91)
Steering Rack Boot
Clip
Clamp
Rack Housing
Lower Bearing
◆ Oil Seal
★ Adjusting Screw
Upper Bearing
Steering Rack Housing
Steering Pinion
★ Cap
Rack End
850 (61, 83)
* 730 (53, 72)
Rack Guide
★ Cap Lock Nut
700 (51, 69)
* 570 (41, 56)
Spring
480 (35, 47)
Rack Guide Spring
Tie Rod End
Steering Rack
◆ Claw Washer
480 (35, 47)
Rack End
850 (61, 83)
Tie Rod End
kg-cm (ft-lb, N·m) : Specified torque
◆ Non-reusable part
★ Precoated Part
* For use of SST
SR0997

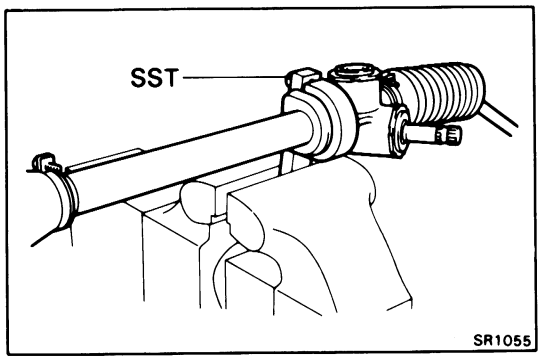

DISASSEMBLY OF GEAR HOUSING

1. CLAMP GEAR HOUSING IN VISE

Using SST, clamp the gear housing in the vise.

SST 09612-00012

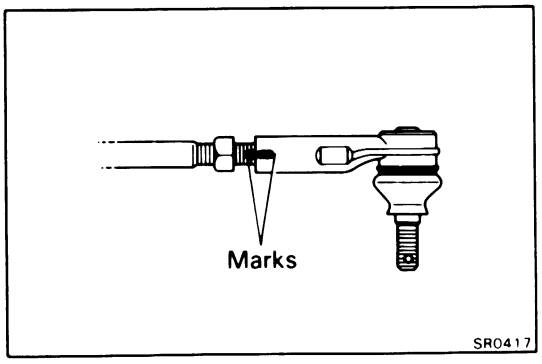

2. REMOVE TIE RODS

(a) Loosen the lock nut and place matchmarks on the tie rod and rack end.

(b) Remove the tie rod and lock nut.

3. REMOVE CLIPS, CLAMPS AND RACK BOOTS

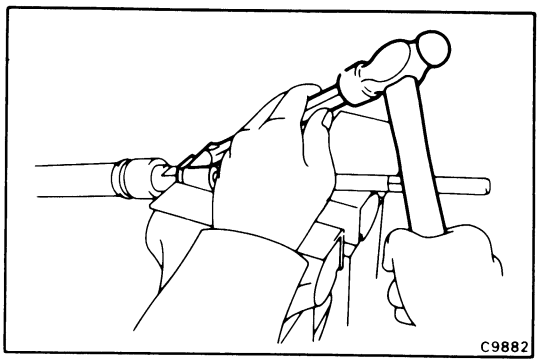

4. REMOVE RACK ENDS AND CLAW WASHERS

(a) Unstake the claw washer.

CAUTION: Avoid any impact to the rack.

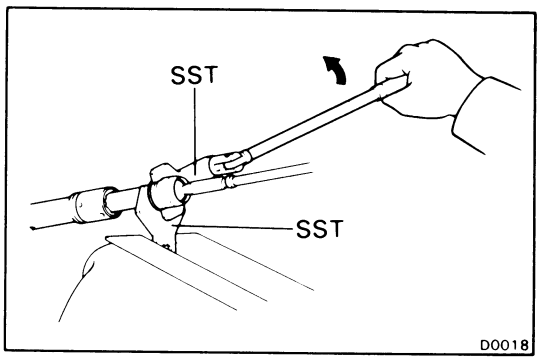

(b) Using SST, remove the rack ends.

SST 09612-10093 (09628-10020)
09612-24013 (09617-24010)

NOTE: Mark the left and right rack ends.

(c) Remove the claw washer.

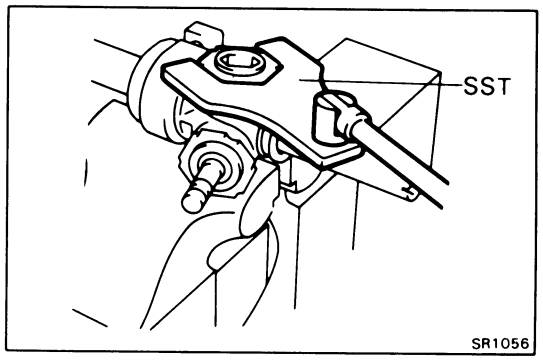

5. REMOVE RACK GUIDE SPRING CAP LOCK NUT

Using SST, remove the rack guide spring cap lock nut.

SST 09612-10093 (09617-10010)

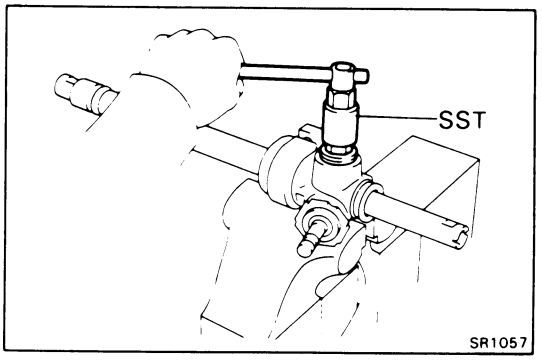

6. REMOVE RACK GUIDE SPRING CAP

Using SST, remove the rack guide spring cap.

SST 09612-24013 (09612-10022)

7. REMOVE RACK GUIDE SPRING

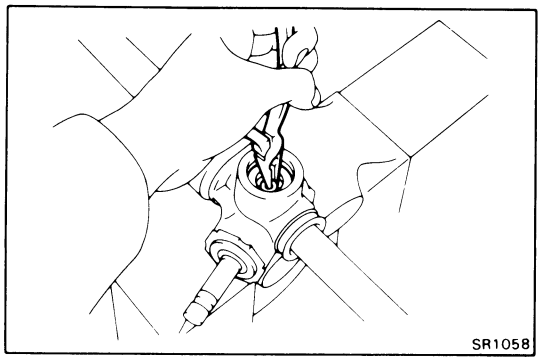

8. REMOVE RACK GUIDE AND RACK GUIDE SEAT

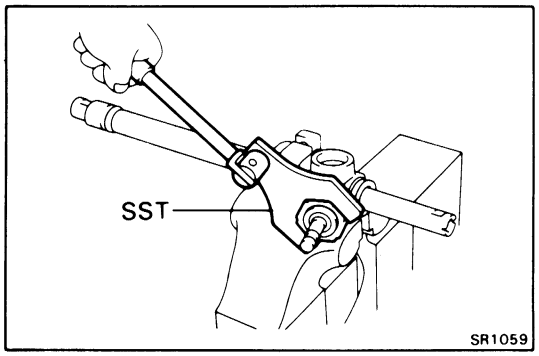

9. REMOVE PINION BEARING ADJUSTING SCREW LOCK NUT

Using SST, remove the pinion bearing adjusting screw lock nut.

SST 09612-10093 (09617-10010)

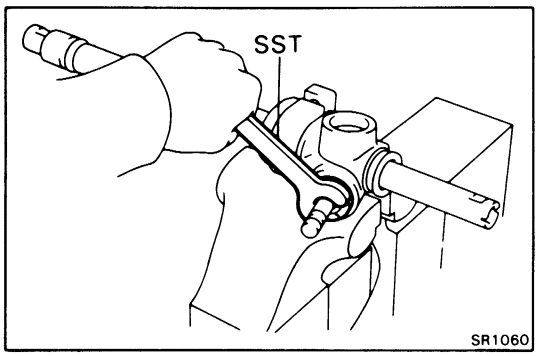

10. REMOVE PINION BEARING ADJUSTING SCREW

Using SST, remove the pinion bearing adjusting screw.

SST 09612-24013 (09616-10020)

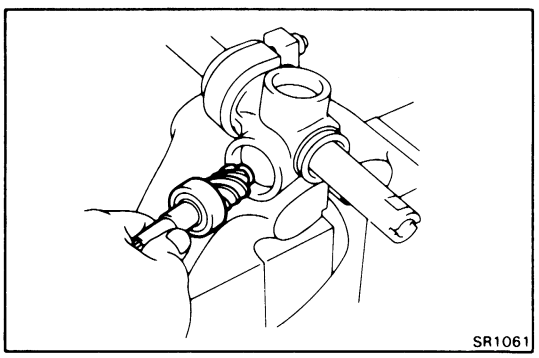

11. REMOVE PINION WITH UPPER BEARING

NOTE: Be careful not to damage the serrations.

(a) Fully pull the rack from the housing side and align the rack notched portion with the pinion.

(b) Remove the pinion together with the upper bearing.

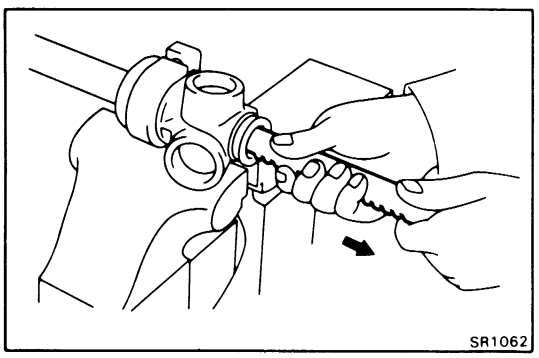

12. REMOVE RACK

Remove the rack from the pinion side without revolving it.

NOTE: If the rack is pulled from the tube side, there is a possibility of damaging the bushing with the rack teeth surface.

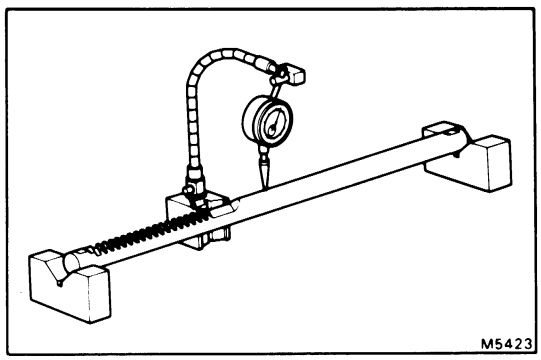

INSPECTION AND REPAIR OF GEAR HOUSING COMPONENTS

1. INSPECT RACK

(a) Check the rack for runout and for teeth wear or damage.

Maximum runout: 0.3 mm (0.012 in.)

(b) Check the back surface for wear or damage.

If faulty, replace it.

CAUTION: Do not use a wire brush when cleaning.

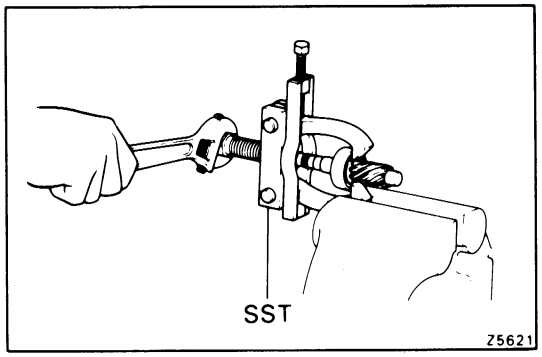

2. INSPECT PINION BEARINGS

3. IF NECESSARY, REPLACE PINION UPPER BEARING

(a) Remove the upper bearing with SST.

SST 09950-20017

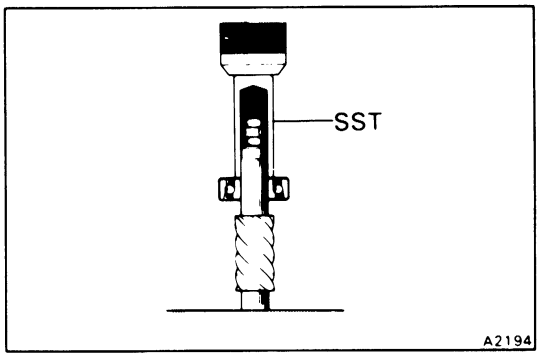

(b) Install a new upper bearing with SST.

SST 09612-24013 (09612-10061)

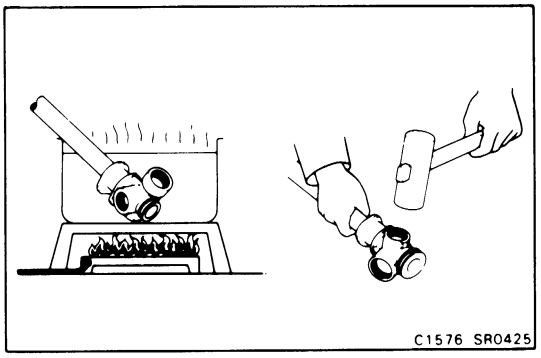

4. IF NECESSARY, REPLACE PINION LOWER BEARING

(a) Heat the rack housing to above 80°C (176°F).

(b) Tap the rack housing with a plastic hammer or such to remove the lower bearing by recoil.

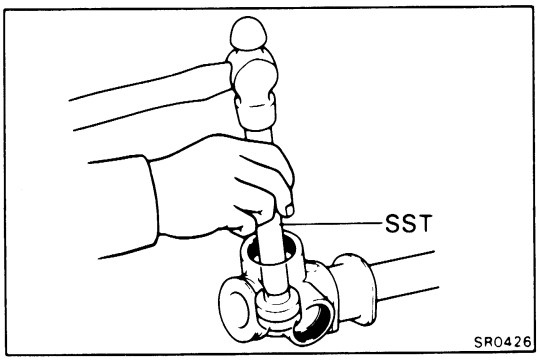

(c) Heat the rack housing to above 80°C (176°F).

(d) Install a new lower bearing with SST.

SST 09620-30010 (09627-30010, 09631-00020)

NOTE: Observe the correct bearing direction.

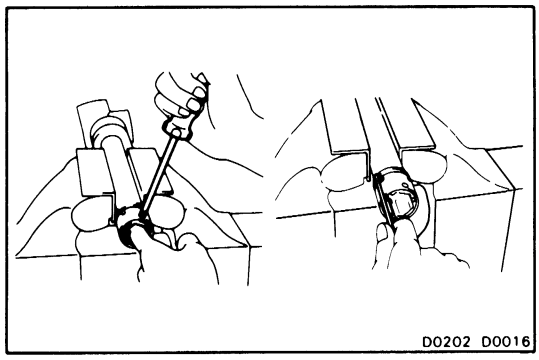

5. IF NECESSARY, REPLACE RACK BUSHING

(a) Push in the three claws of the bushing to the rack housing and pull out the bushing.

(b) Insure that the tube hole is not clogged with grease.

NOTE: If the tube hole is clogged, the pressure inside the boot will change after it is assembled and the handle turned.

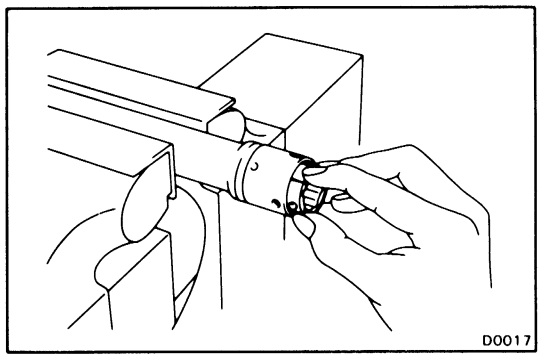

(c) Align the rack housing hole to the three claw of the bushing and install it.

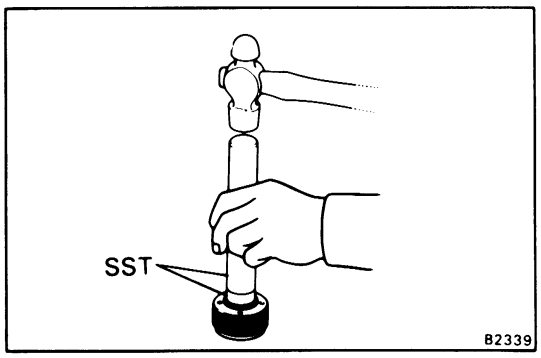

6. IF NECESSARY, REPLACE PINION OIL SEAL

(a) Using SST, drive out the oil seal.

SST 09620-30010 (09631-00020)
09630-24013 (09620-24010)

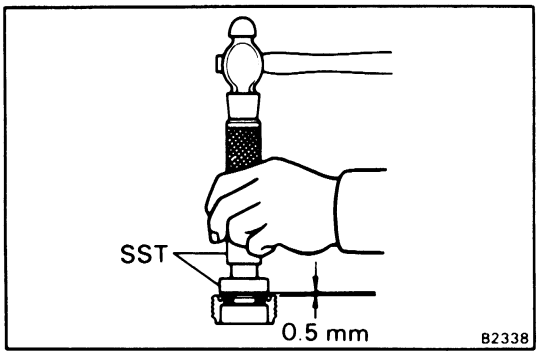

(b) Using SST, drive in a new pinion oil seal until it is protruding 0.5 mm (0.020 in.).

SST 09620-30010 (09631-00020)
09630-24013 (09620-24020)

ASSEMBLY OF GEAR HOUSING

(See page SR-16)

1. PACK MOLYBDENUM DISULPHIDE LITHIUM BASE GREASE ON PARTS SHOWN:

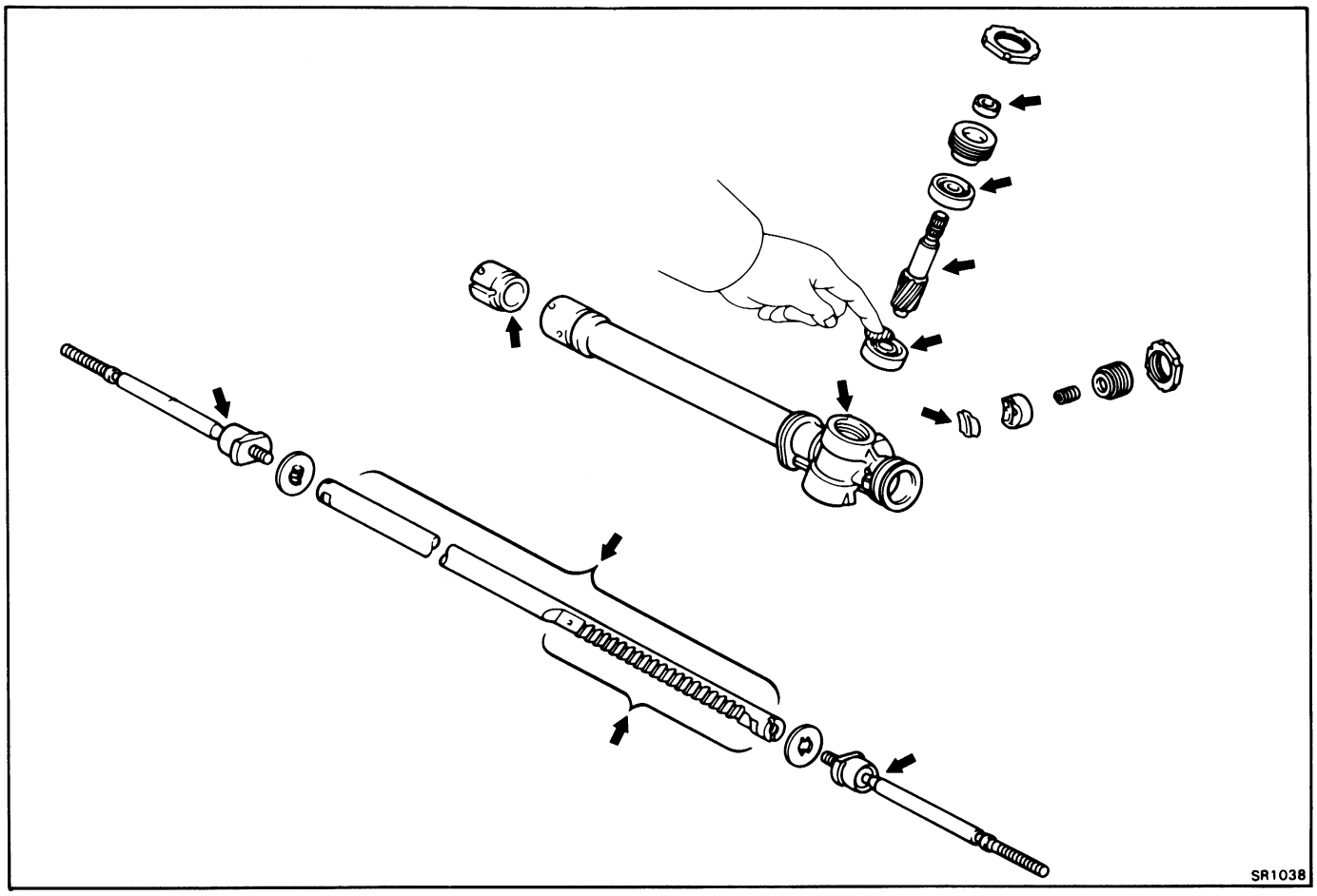

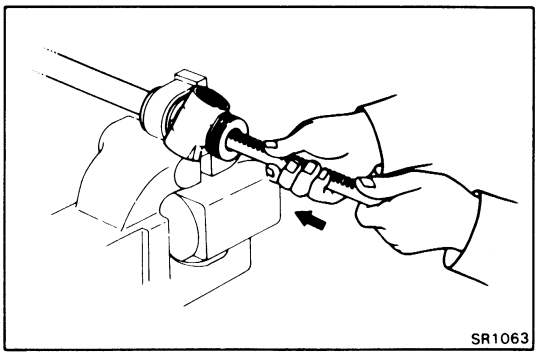

2. INSTALL RACK INTO RACK HOUSING

(a) From the pinion side, install the rack into the rack housing.

(b) Set the rack notched side so that the pinion can be positioned inside.

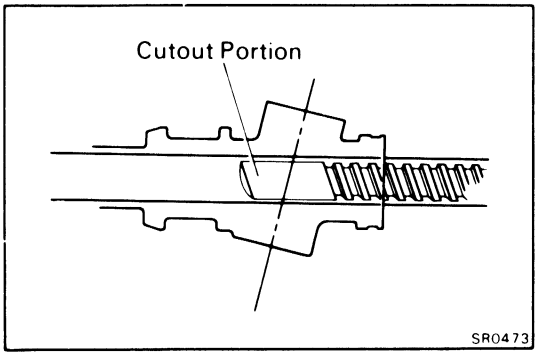

(c) Line up the cutout portion of the rack with the pinion.

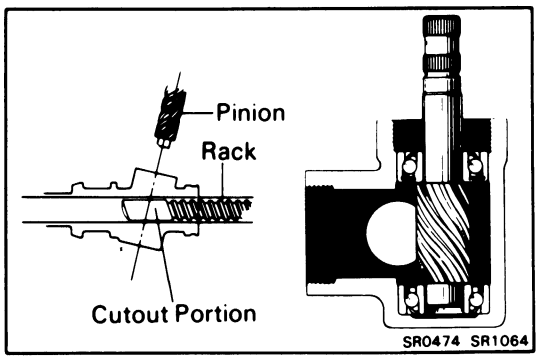

3. INSTALL PINION INTO HOUSING

Insure that the pinion end is securely in the lower bearing.

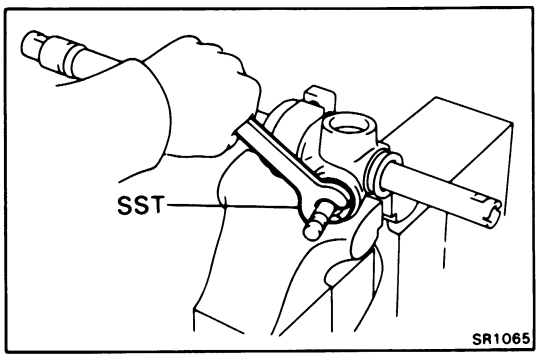

4. INSTALL PINION BEARING ADJUSTING SCREW

(a) Coat sealant onto the screw threads.

Sealant: Part No. 08833-00080, THREE BOND 1344, LOCTITE 242 or equivalent

(b) Install the pinion bearing adjusting screw with SST.

SST 09612-24013 (09616-10020)

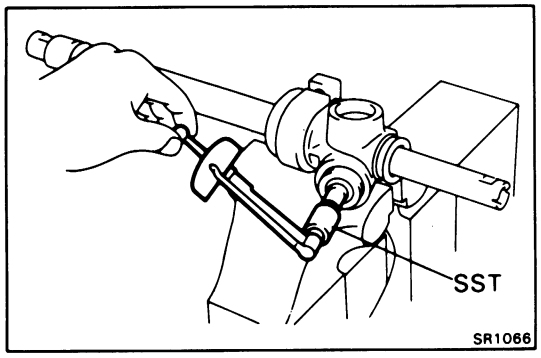

5. ADJUST PINION PRELOAD

(a) Line up the cutout portion of the rack with the pinion.

(b) Using SST, torque the pinion bearing adjusting screw to 3.7 kg-cm (3.2 in.-lb, 0.4 N·m).

SST 09612-24013 (09616-10010)

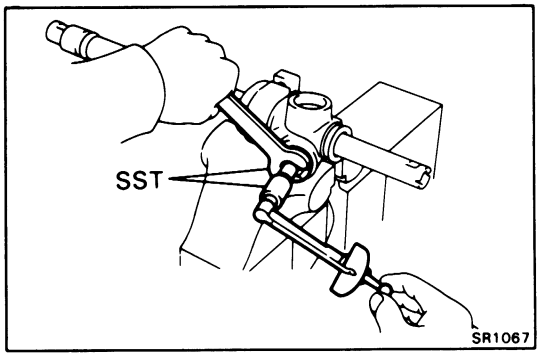

(c) Using same SST, loosen the pinion bearing adjusting screw to a torque of 2.3 – 3.3 kg-cm (2.0 – 2.9 in.-lb, 0.2 – 0.3 N·m).

SST 09612-24013 (09616-10010, 09616-10020)

Preload (torque): 2.3 – 3.3 kg-cm (2.0 – 2.9 in.-lb, 0.2 – 0.3 N·m)

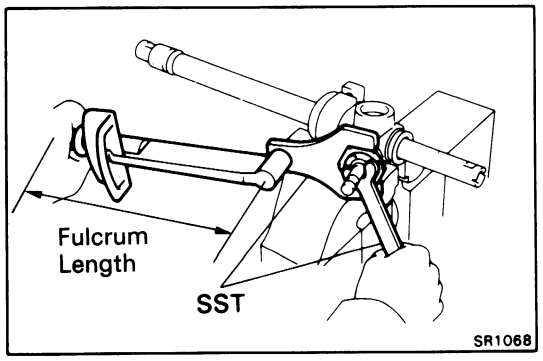

6. INSTALL PINION BEARING ADJUSTING SCREW LOCK NUT

(a) Coat sealant onto the lock nut and housing contact surface.

Sealant: Part No. 08833-00080, THREE BOND 1344, LOCTITE 242 or equivalent

(b) Install the lock nut and torque it with SST.

SST 09612-10093 (09617-10010)
09612-24013 (09616-10020)

Torque: 930 kg-cm (67 ft-lb, 91 N·m)

NOTE: Use a torque wrench with a fulcrum length of 42.5 cm (16.73 in.).

(c) Recheck the pinion preload.

If incorrect, readjust.

Preload (turning): 2.3 – 3.3 kg-cm (2.0 – 2.9 in.-lb, 0.2 – 0.3 N·m)

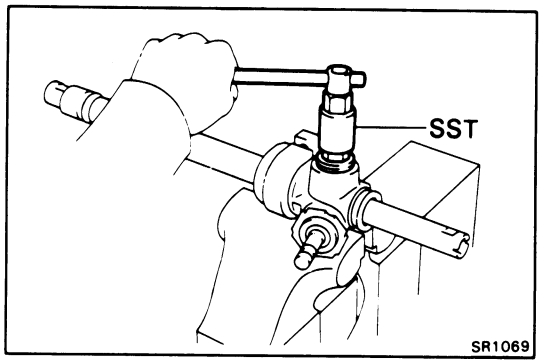

7. INSTALL RACK GUIDE SEAT AND RACK GUIDE

8. INSTALL RACK GUIDE SPRING

9. INSTALL RACK GUIDE SPRING CAP

(a) Coat sealant onto the guide spring cap threads.

Sealant: Part No. 08833-00080, THREE BOND 1344, LOCTITE 242 or equivalent

(b) Mesh the rack with the pinion.

(c) Install the rack guide spring cap with SST.

SST 09612-24013 (09612-10022)

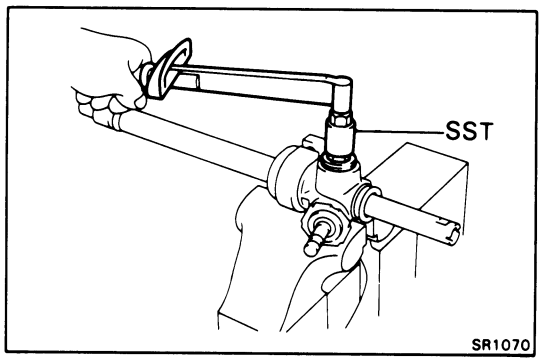

10. ADJUST TOTAL PRELOAD

(a) Tighten the rack guide spring cap and torque with SST.

SST 09612-24013 (09612-10022)

Torque: 250 kg-cm (18 ft-lb, 25 N·m)

(b) Using SST, return the rack spring cap 25°.

SST 09612-24013 (09612-10022)

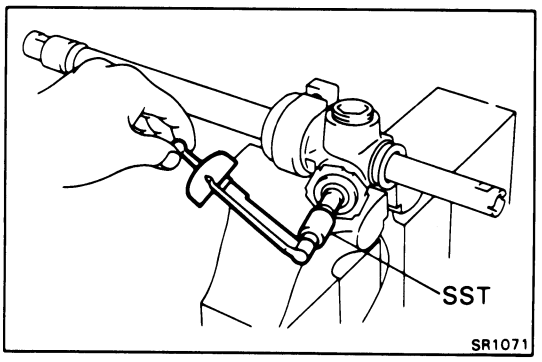

(c) Measure the total preload with SST.

SST 09612-24013 (09616-10010)

Preload (turning): 5 — 13 kg-cm (4.3 — 11.3 in.-lb, 0.5 — 1.3 N·m)

(d) If preload is insufficient:
Retorque the rack guide spring cap, and return it 12° or slightly less.

(e) If there is excess preload:
Slightly return the rack guide spring cap.

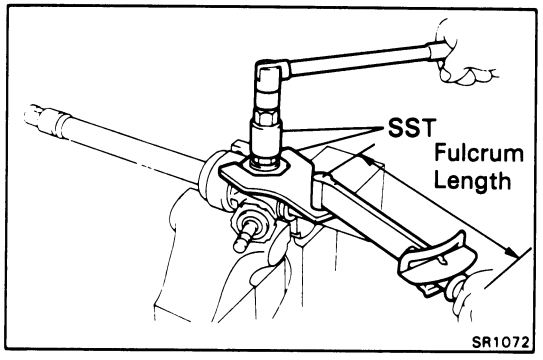

11. INSTALL RACK GUIDE SPRING CAP LOCK NUT

(a) Coat sealant onto the lock nut thread and housing surface.

Sealant: Part No. 08833-00080, THREE BOND 1344, LOCTITE 242 or equivalent

(b) Tighten the lock nut and torque it with SST.

SST 09612-10093 (09617-10010)
09612-24013 (09612-10022)

Torque: 570 kg-cm (41 ft-lb, 56 N·m)

NOTE: Use a torque wrench with a fulcrum length of 34 cm (13.39 in.).

(c) Recheck the total preload. If incorrect, readjust.

Preload (turning): 5 — 13 kg-cm (4.3 — 11.3 in.-lb, 0.5 — 1.3 N·m)

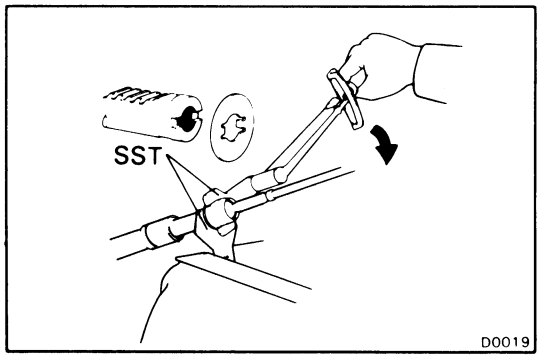

12. INSTALL NEW CLAW WASHERS AND RACK ENDS

(a) Install a new claw washer.

NOTE: Align the claw of the claw washer with the rack groove.

(b) Install the rack end and torque it with SST.

SST 09612-10093 (09628-10020)
09612-24013 (09617-24010)

NOTE: Use a torque wrench with a fulcrum length of 34 cm (13.39 in.).

Torque: 730 kg-cm (53 ft-lb, 72 N·m)

(c) Stake the claw washer.

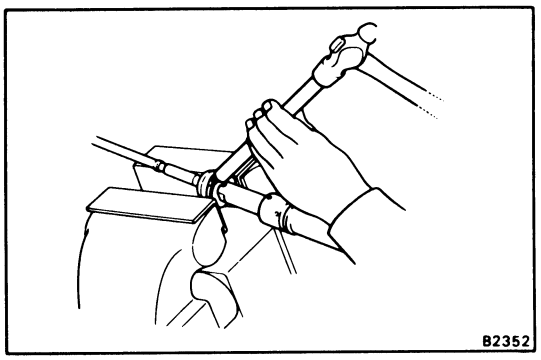

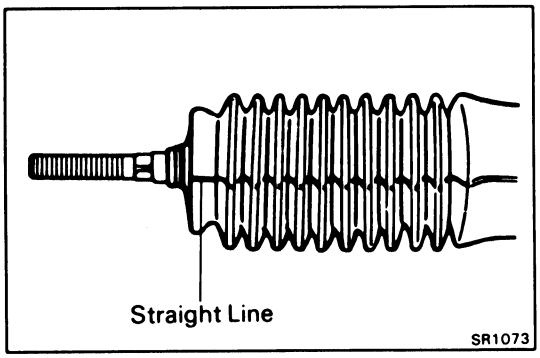

13. INSTALL RACK BOOTS

(a) Install the rack boots.

NOTE: Be careful not to damage or twist the boots. The left and right boots are different. Be careful not to interchange them.

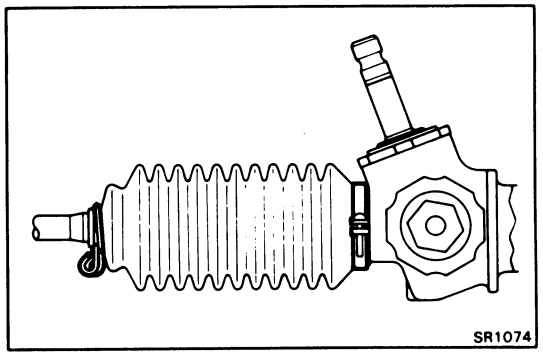

(b) Install the clamps and clips.

NOTE: Face the open ends outward, as shown, to avoid damage to the boots.

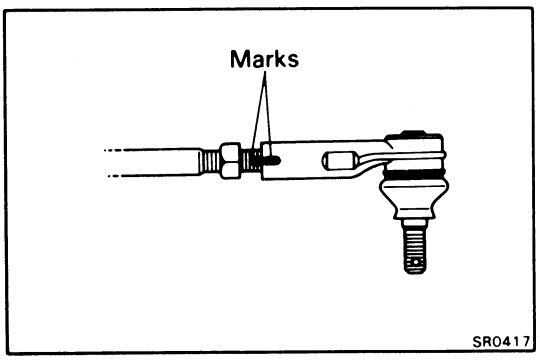

14. INSTALL TIE RODS

(a) Screw the lock nuts and tie rods onto the rack ends until the matchmarks are aligned.

(b) After adjusting toe-in, torque the lock nuts.

Torque: 480 kg-cm (35 ft-lb, 47 N·m)

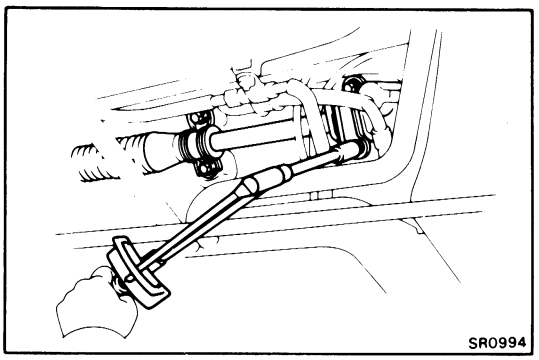

INSTALLATION OF GEAR HOUSING

(See page SR-14)

1. INSTALL GEAR HOUSING ASSEMBLY

Install the four bolts and torque them.

NOTE: Be careful not to damage the boots.

Align the centers of the column hole cover shield and the hole in the body where the pinion shaft passes through.

Torque: 440 kg-cm (32 ft-lb, 43 N·m)

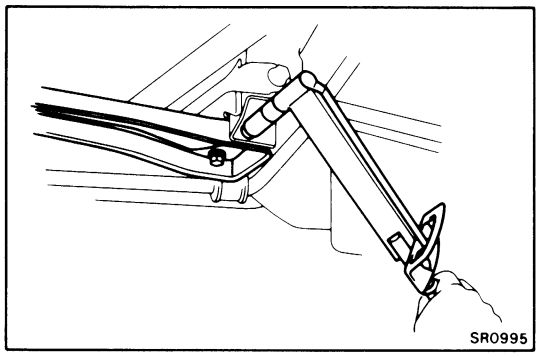

2. INSTALL CENTER FLOOR CROSSMEMBER

Install the center floor crossmember and four bolts.

Torque: 260 kg-cm (19 ft-lb, 25 N·m)

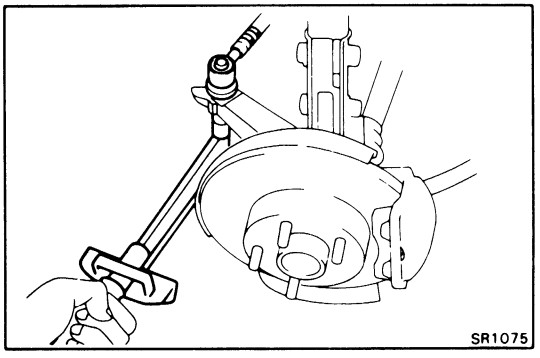

3. CONNECT TIE ROD ENDS TO KNUCKLE ARMS

(a) Install the tie rod ends to the knuckle arms and torque the nuts.

Torque: 500 kg-cm (36 ft-lb, 49 N·m)

(b) Install a new cotter pin.

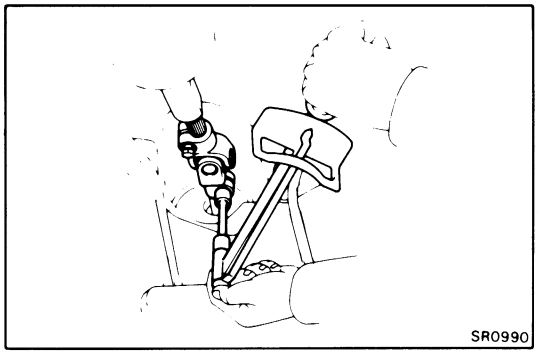

4. INSTALL UNIVERSAL JOINT

(a) Align matchmarks on the main shaft, universal joint and pinion shaft.

(b) Install and torque the two bolts.

Torque: 360 kg-cm (26 ft-lb, 35 N·m)

5. INSTALL FRONT WHEELS

6. ADJUST TOE-IN (See page FA-5)

7. TORQUE TIE ROD END LOCK NUTS

Torque: 480 kg-cm (35 ft-lb, 47 N·m)

8. CHECK STEERING WHEEL CENTER POINT

9. CHECK STEERING WHEEL FREE PLAY

BODY ELECTRICAL SYSTEM

	Page
GENERAL INFORMATION	BE-2
LOCATION OF SWITCHES AND RELAYS	BE-6
IGNITION SWITCH	BE-10
LIGHTING	BE-11
WIPER AND WASHER	BE-19
INSTRUMENTS, GAUGES AND WARNING LIGHTS	BE-23
REAR WINDOW DEFOGGER	BE-31
HEATER	BE-33
CRUISE CONTROL SYSTEM	BE-39
POWER WINDOW	BE-63
DOOR LOCK CONTROL SYSTEM	BE-66
REMOTE CONTROL MIRROR	BE-68
AUDIO SYSTEM	BE-69
CLOCK	BE-78

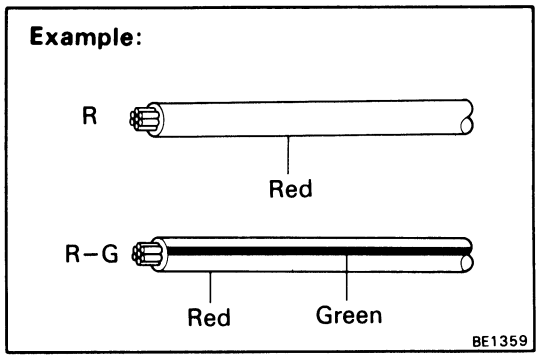

GENERAL INFORMATION

WIRING COLOR CODE

Wire colors are indicated by an alphabetical code.

B = Black	L = Blue	R = Red
BR = Brown	LG = Light Green	V = Violet
G = Green	O = Orange	W = White
GR = Gray	P = Pink	Y = Yellow

The first letter indicates the basic wire color and the second letter indicates the color of the stripe.

CONNECTOR

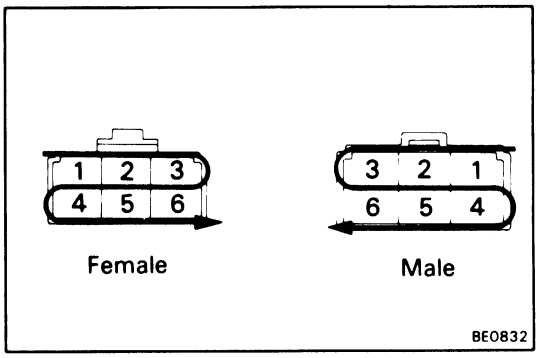

1. PIN NUMBER OF FEMALE CONNECTOR

Numbered in order from upper left to lower right.

2. PIN NUMBER OF MALE CONNECTOR

Numbered in order from upper right to lower left.

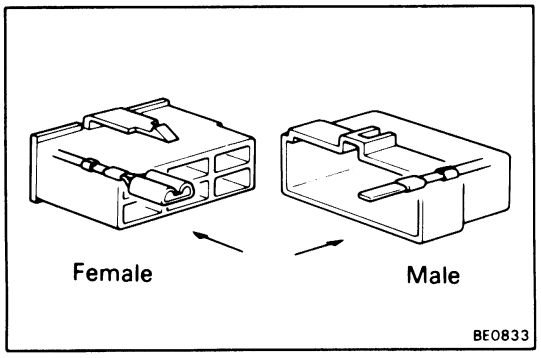

3. DISTINCTION OF MALE AND FEMALE CONNECTORS

Male and female connectors are distinguished by shape of their internal pins.

(a) All connectors are shown from the open end, and the lock is on top.

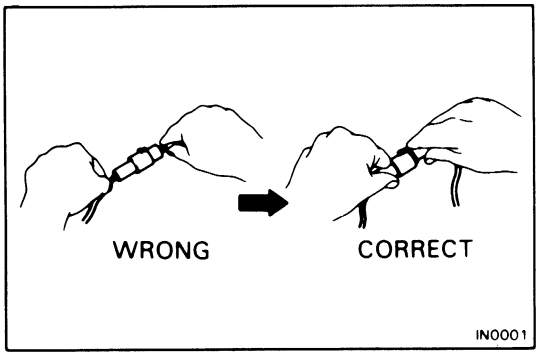

(b) To pull apart the connectors, pull on the connector itself, not the wires.

REPLACEMENT OF COMBINATION SWITCH

REMOVE TERMINALS FROM CONNECTOR

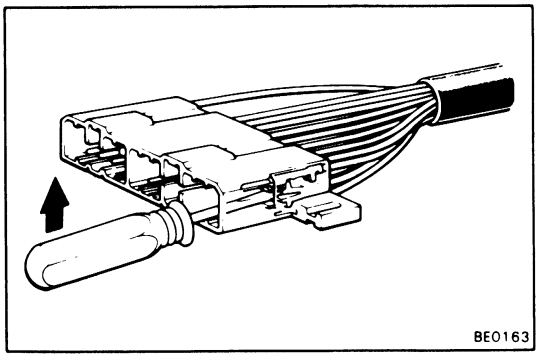

(a) From the open end, insert a miniature screwdriver between the locking lugs and terminal.

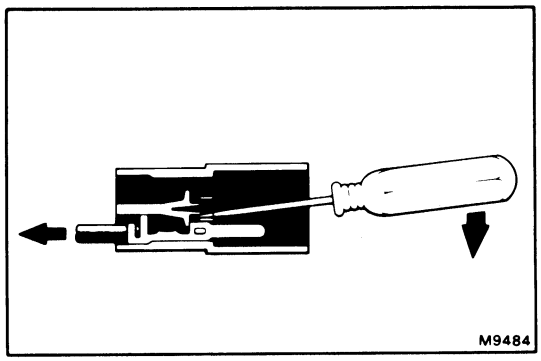

(b) Pry up the locking lugs with the screwdriver and pull the terminal out from the rear.

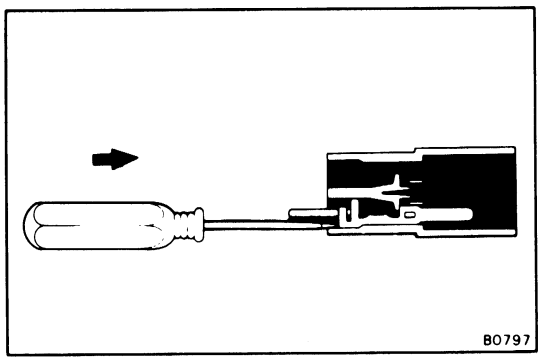

INSTALL TERMINALS TO CONNECTOR

(a) Push in the terminal until it is securely locked in the connector lug.

(b) Pull on the wire to confirm that it is securely locked.

RESET CIRCUIT BREAKER

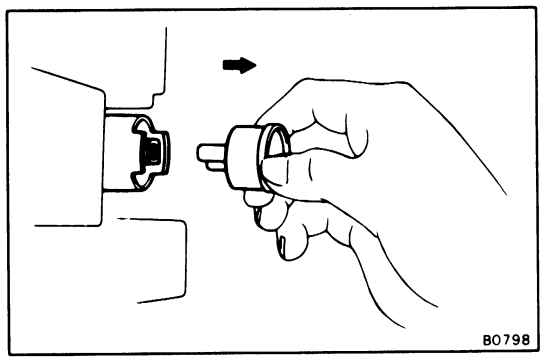

1. REMOVE CIRCUIT BREAKER

(a) Remove the kick panel.

(b) Remove the circuit breaker.

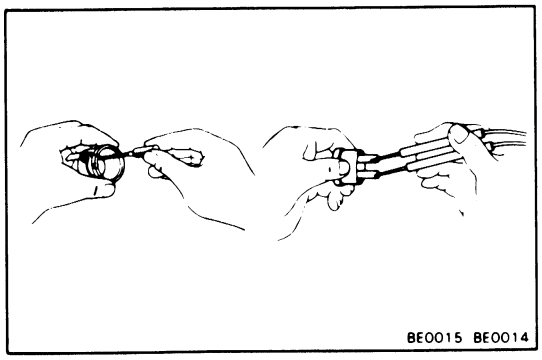

2. RESET CIRCUIT BREAKER

(a) Insert the needle into the reset hole and push it.

(b) Using an ohmmeter, check that there is continuity between both terminals of the circuit breaker.

If there is no continuity, replace the circuit breaker.

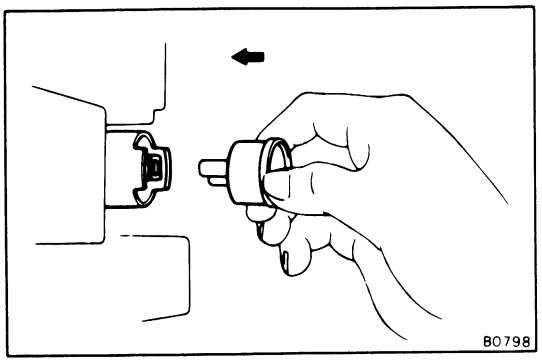

3. INSTALL CIRCUIT BREAKER

(a) Install the circuit breaker.

NOTE: If a circuit breaker continues to cut out, a short circuit is indicated. Have the system checked by a qualified technician.

(b) Install the kick panel.

REPLACEMENT OF FUSES

Install new fuses with correct amperage ratings.

CAUTION:

1. **Turn off all electrical components and the ignition switch before replacing a fuse. Do not exceed the fuse amp rating.**
2. **Always use a fuse puller for removing and inserting a fuse. Remove and insert straight in and out without twisting. Twisting could force open the terminals too much, resulting in a bad connection.**

If a fuse continues to blow, the circuit is probably shorted. Have the system checked by a qualified technician.

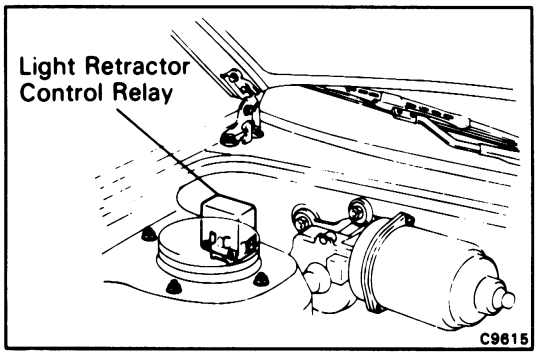

TAKE CARE WHEN INSPECTING HEADLIGHT CIRCUIT

WARNING: Before inspecting or adjusting the retractable headlight circuit, disconnect the light retractor control relay connector.

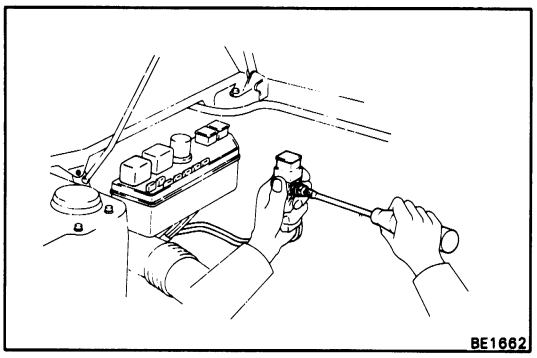

REMOVE HEAD 60A FUSIBLE LINK

(a) Remove negative battery cable.

(b) Remove the relay block undercover.

(c) Pull out the fusible link cassette from below.

(d) Remove the bolt, and remove the fusible link.

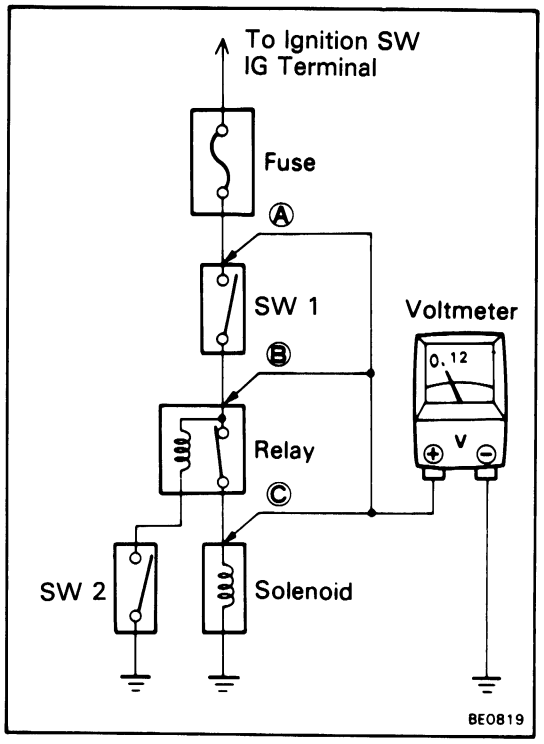

VOLTAGE CHECK

(a) Establish conditions in which voltage is present at the check point.

Example:

Ⓐ – Ignition SW on

Ⓑ – Ignition SW and SW 1 on

Ⓒ – Ignition SW, SW 1 and Relay on (SW 2 off)

(b) Using a voltmeter, connect the negative lead to a good ground point or negative battery terminal and the positive lead to the connector or component terminal. This check can be done with a test light instead of a voltmeter.

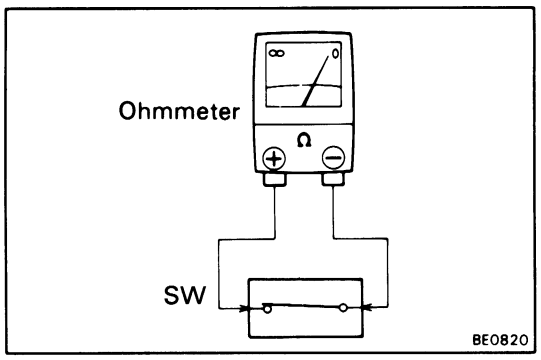

CONTINUITY AND RESISTANCE CHECK

(a) Disconnect the battery terminal or wire so there is no voltage between the check points.

(b) Contact the two leads of an ohmmeter to each of the check points.

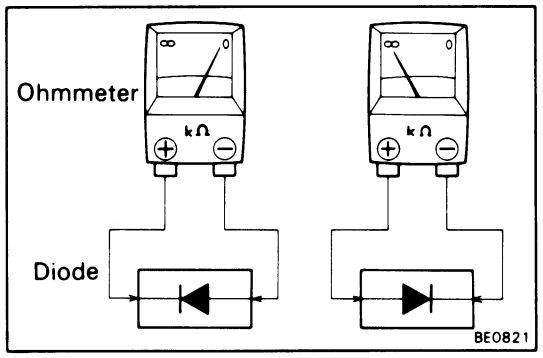

If the circuit has diodes, reverse the two leads and check again.
When contacting the negative lead to the diode positive side and the positive lead to the negative side, there should be continuity.
When contacting the two leads in reverse, there should be no continuity.

NOTE: Specifications may vary depending on the type of tester, so refer to the tester's instruction manual before performing the inspection.

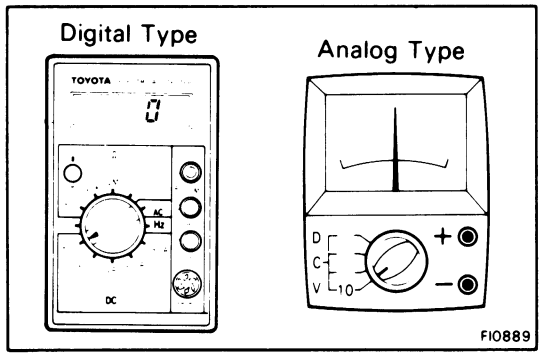

(c) Use a volt/ohmmeter with high impedance (10 kΩ/V minimum) for troubleshooting of the electrical circuit.

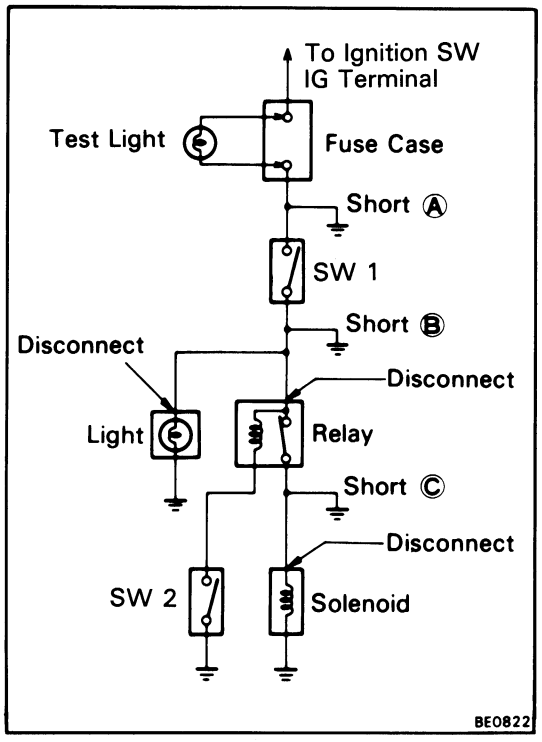

FINDING A SHORT CIRCUIT

(a) Remove the blown fuse and disconnect all loads of the fuse.

(b) Connect a test light in place of the fuse.

(c) Establish conditions in which the test light comes on.

Example:

Ⓐ – Ignition SW on

Ⓑ – Ignition SW and SW 1 on

Ⓒ – Ignition SW, SW 1 and Relay on (Connect the Relay) and SW 2 off (or Disconnect SW 2)

(d) Disconnect and reconnect the connectors while watching the test light.
The short lies between the connector where the test light stays lit and the connector where the light goes out.

(e) Find the exact location of the short by lightly shaking the problem wire along the body.

LOCATION OF SWITCHES AND RELAYS

ENGINE COMPARTMENT SWITCHES AND RELAYS

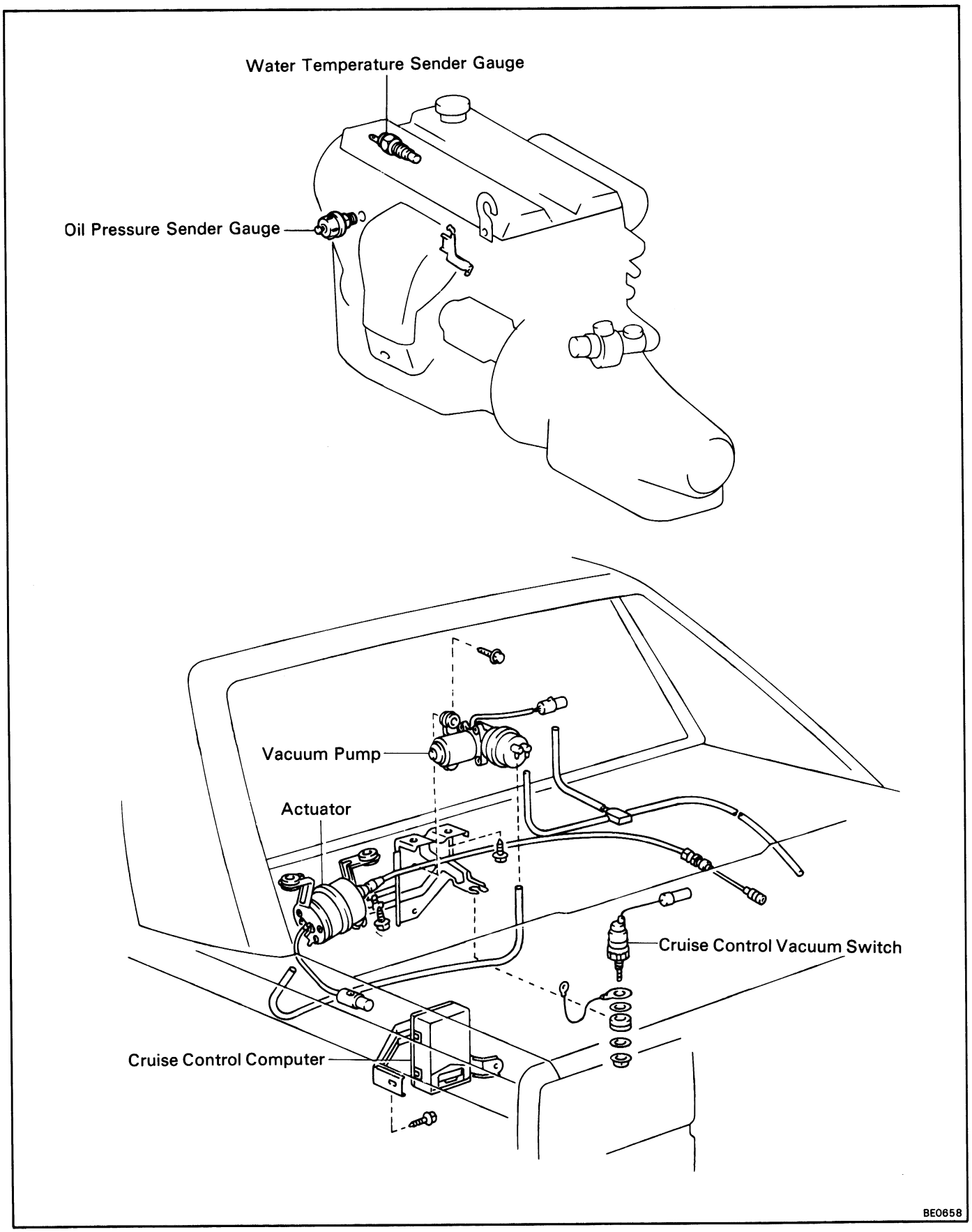

INSTRUMENT PANEL SWITCHES AND RELAYS

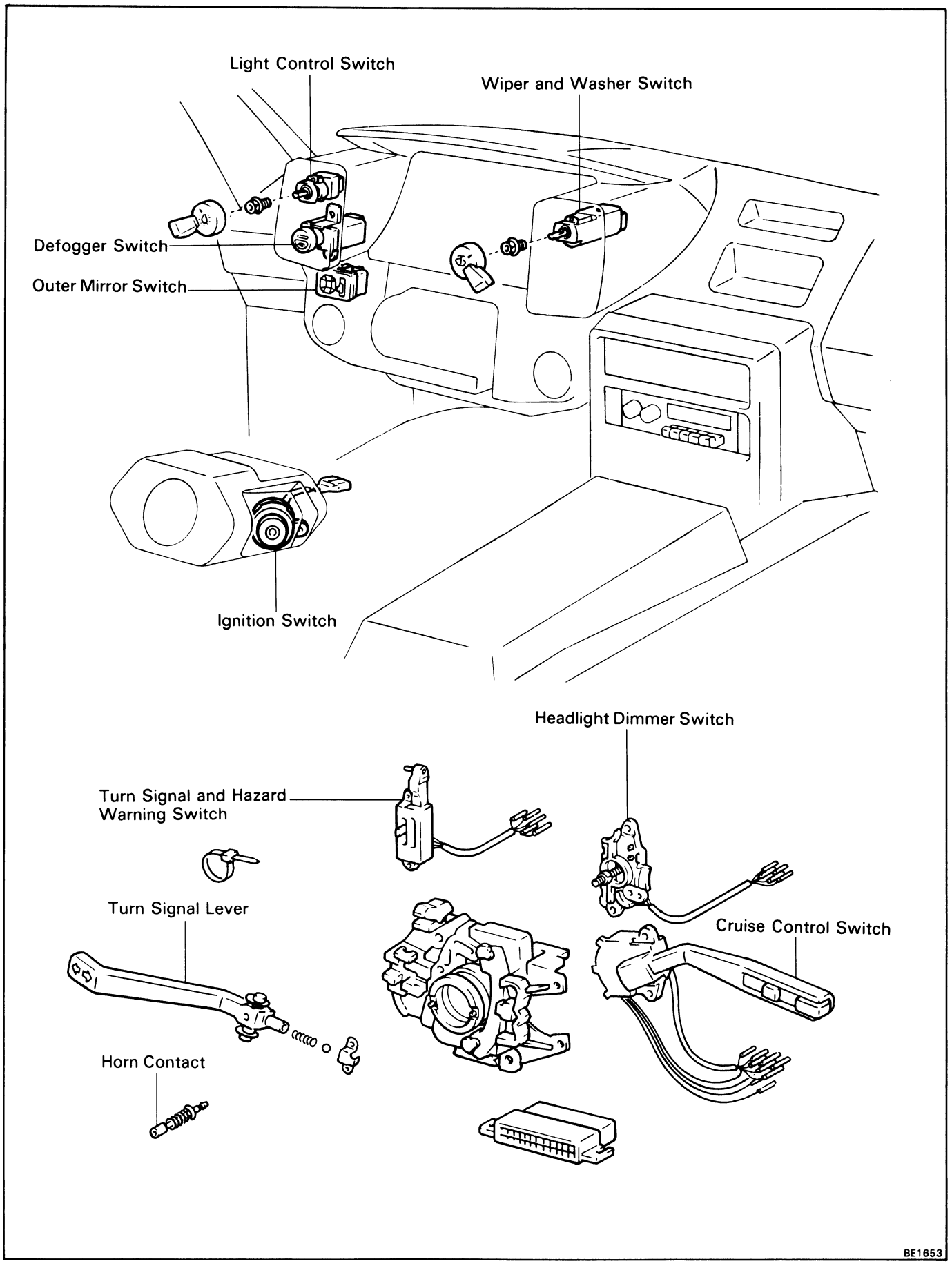

PASSENGER COMPARTMENT SWITCHES AND RELAYS

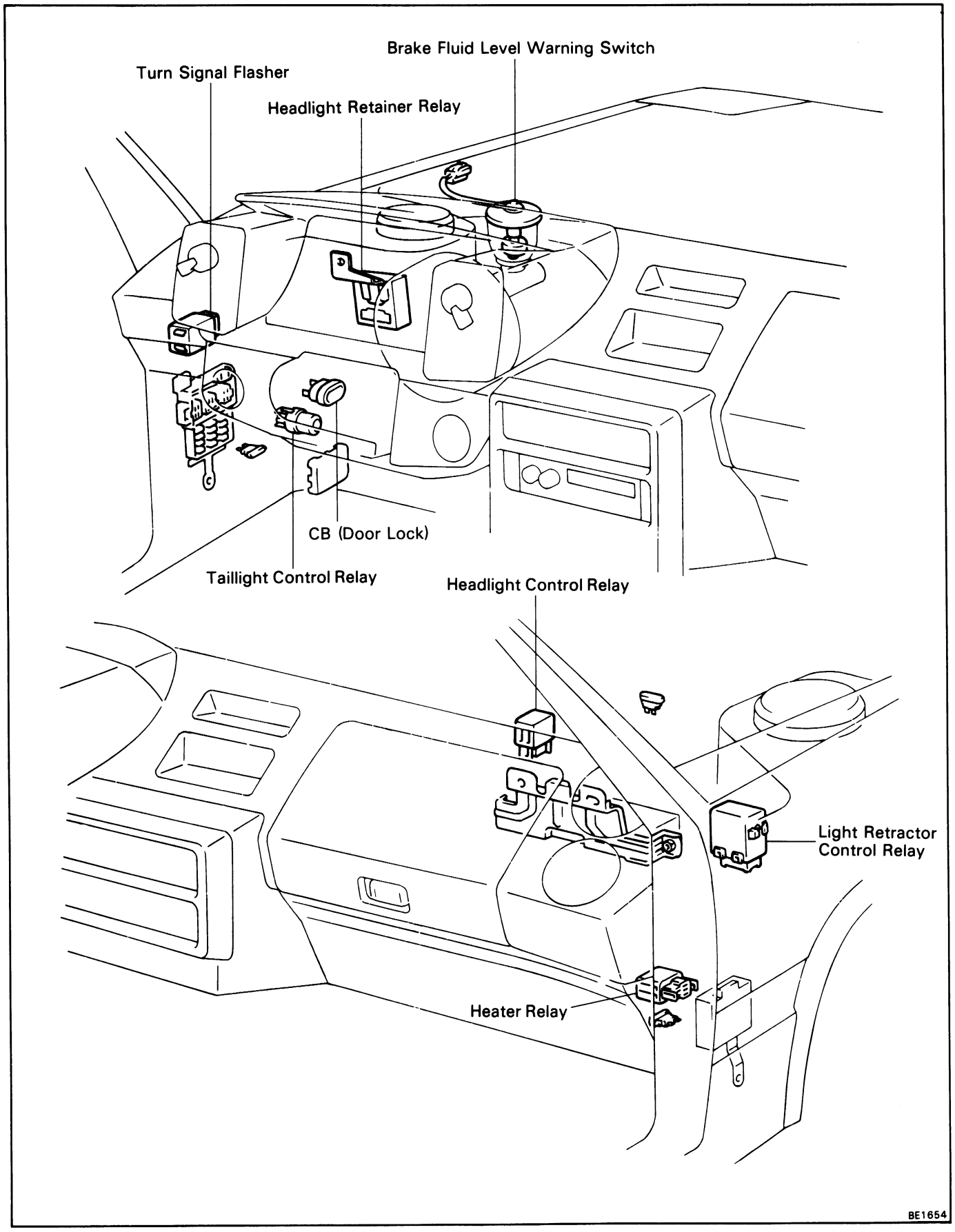

PASSENGER AND LUGGAGE COMPARTMENT SWITCHES AND RELAYS

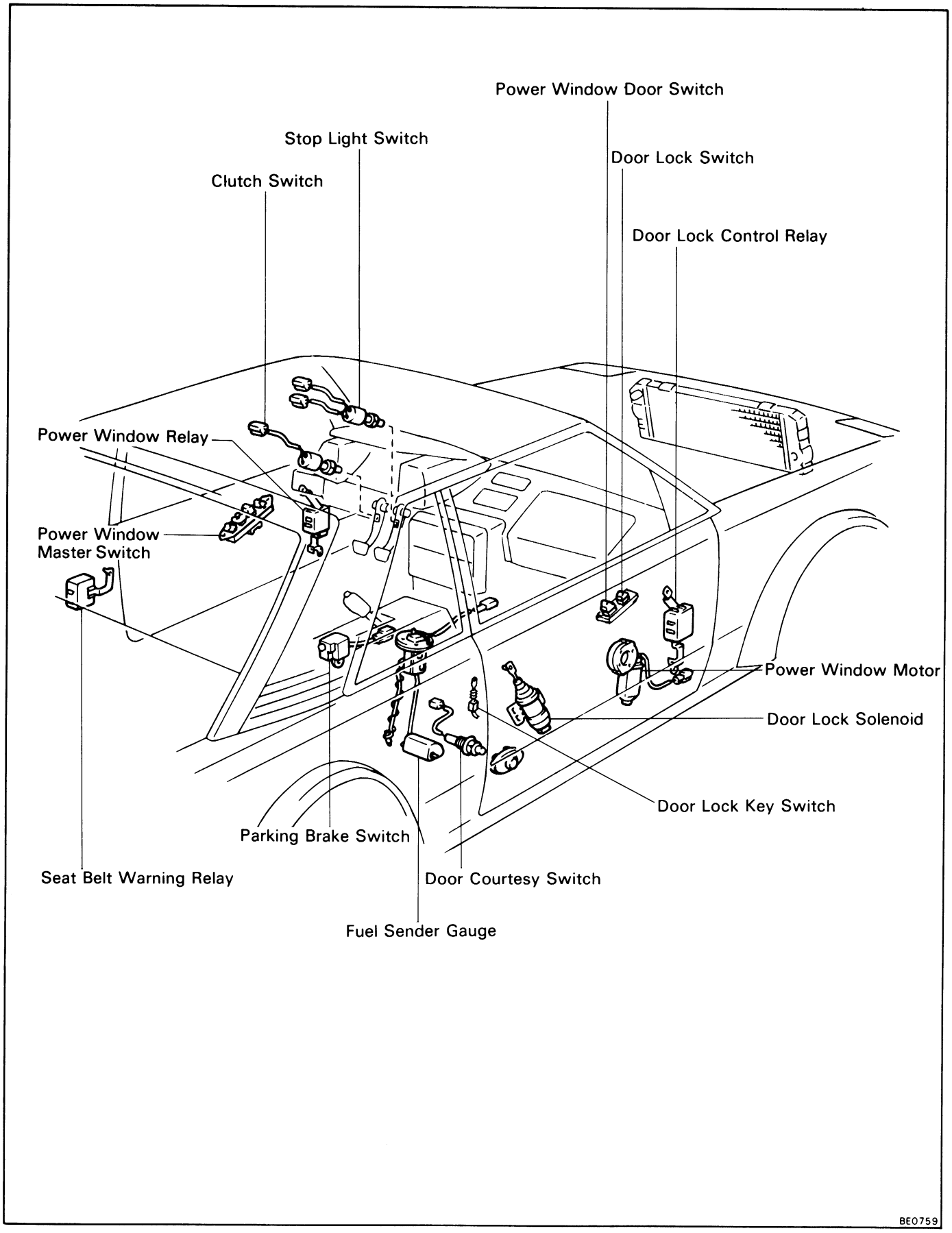

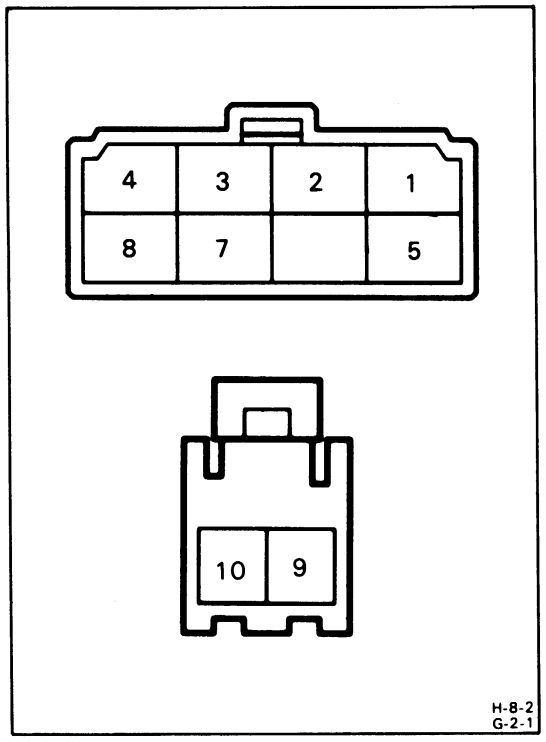

IGNITION SWITCH

INSPECTION OF IGNITION SWITCH

INSPECT SWITCH CONTINUITY

Inspect the switch continuity between terminals.

Switch position \ Terminal		4	3	2	1	8	7	5	9	10
LOCK										
ACC		○	○							
ON		○	○	○		○	○			
START		○		○	○	○	○	○		
Warning	Normal									
	Push								○	○

If continuity is not as specified, replace the switch.

LIGHTING
Troubleshooting

Problem	Possible cause	Remedy	Page
Only one light does not light (all exterior)	Light bulb burned out	Replace bulb	
	Socket, wire or ground faulty	Repair as necessary	
Headlights do not flip up	Fusible link blown	Replace fusible link	
	RTR MTR fuse blown	Replace fuse and check for short	BE-4
	Light retractor control relay faulty	Check relay	BE-16
	Light retractor motor faulty	Check motor	BE-17
	Wiring or ground faulty	Repair as necessary	
No headlights light	Fusible link blown	Replace fusible link	
	Headlight control relay faulty	Check relay	BE-14
	Light control switch faulty	Check switch	BE-12
	Wiring or ground faulty	Repair as necessary	
High beam headlights or headlight flasher do not operate	Light control switch faulty	Check switch	BE-12
	Wiring faulty	Repair as necessary	
Tail, parking and license lights do not light	TAIL fuse blown	Replace fuse and check for short	BE-4
	Fusible link blown	Replace fusible link	
	Taillight control relay faulty	Check relay	BE-14
	Light control switch faulty	Check switch	BE-12
	Wiring or ground faulty	Repair as necessary	
Stop lights do not light	STOP fuse blown	Replace fuse and check for short	BE-4
	Stop light switch faulty	Adjust or replace switch	
	Wiring or ground faulty	Repair as necessary	
Stop lights stay on	Stop light switch faulty	Adjust or replace switch	
Instrument lights do not light (taillights light)	Light control rheostat faulty	Check rheostat	BE-12
	Wiring or ground faulty	Repair as necessary	
Turn signal does not flash on one side	Turn signal switch faulty	Check switch	BE-18
	Wiring or ground faulty	Repair as necessary	
Turn signals do not operate	TURN GAG fuse blown	Replace fuse and check for short	BE-4
	Turn signal flasher faulty	Check flasher	BE-18
	Turn signal/hazard switch faulty	Check switch	BE-17
	Wiring or ground faulty	Repair as necessary	
Hazard warning lights do not operate	HAZ-RADIO fuse blown	Replace fuse and check for short	BE-4
	Turn signal flasher faulty	Check flasher	BE-18
	Turn signal/hazard switch faulty	Check switch	BE-17
	Wiring or ground faulty	Repair as necessary	

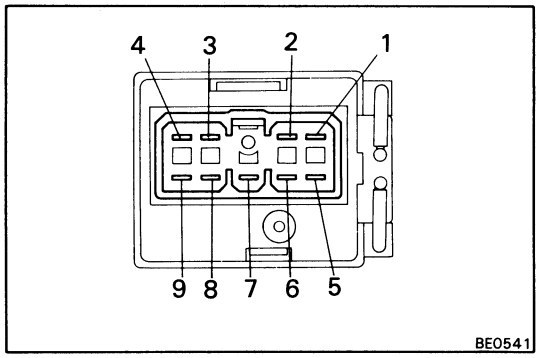

Light Control Switch and Rheostat

INSPECTION OF LIGHT CONTROL SWITCH AND RHEOSTAT

1. INSPECT LIGHT CONTROL SWITCH CONTINUITY

Inspect the switch continuity between terminals.

Switch position \ Terminal	9	8	4	7
OFF				
TAIL	O—O			
HEAD	O—O	O—O	O—O	
HOLD	O—O			O—O

If continuity is not as specified, replace the switch.

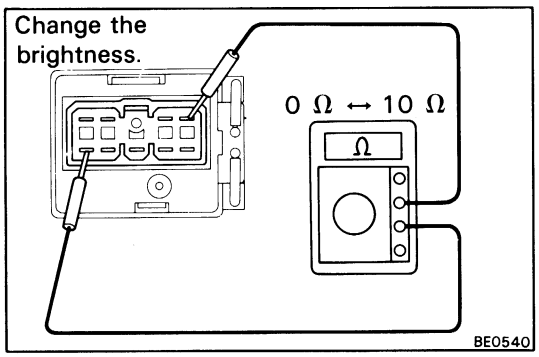

2. INSPECT OPERATION OF LIGHT CONTROL RHEOSTAT

(a) Gradually change the brightness of rheostat from maximum to minimum, check that the resistance between terminals 1 and 9 increase from 0 Ω to 10 Ω.

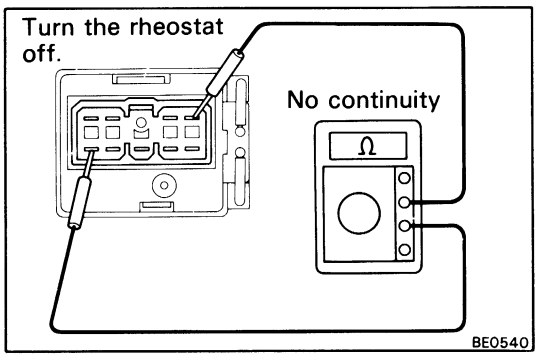

(b) Check that there is no continuity between terminals 1 and 9 with the rheostat turned off.

If operation is not as specified, replace the switch.

3. CHECK THAT IDLE INCREASES

Start the engine. When the light control switch to TAIL, engine revolutions should increase.

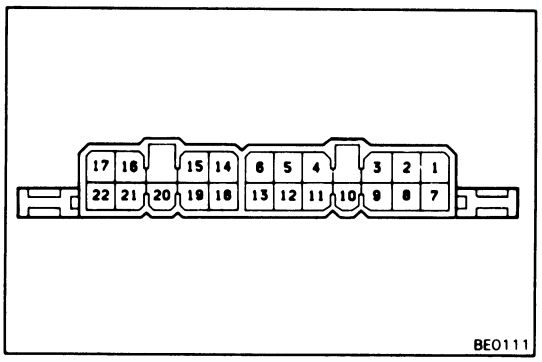

Headlight Dimmer Switch

INSPECTION OF HEADLIGHT DIMMER SWITCH

INSPECT CONTINUITY OF HEADLIGHT DIMMER SWITCH

Inspect the switch continuity between terminals.

Switch position \ Terminal (Wire color)	13 ED (W-B)	6 HL (R-G)	5 HU (R-Y)	12 HF (R-W)
Flash	○	—	○	○
Low Beam	○	○		
High Beam	○	—	○	

If continuity is not as specified, replace the switch.

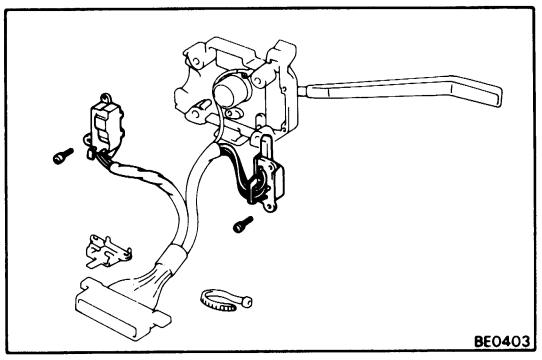

REPLACEMENT OF HEADLIGHT DIMMER SWITCH

REPLACE HEADLIGHT DIMMER SWITCH

(a) Remove the terminals from the connector. (See pages BE-2, 3)

(b) Remove the turn signal and hazard warning switch.

(c) Remove the headlight dimmer switch.

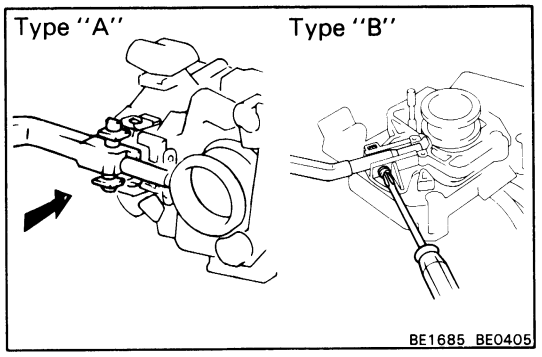

(d) Install the headlight dimmer switch.

(e) Insert the spring into the lever.

(f) Push in the hinge of the lever to the switch body. (Type "A")

(g) Install the lever to the switch body with the screw and nut. (Type "B")

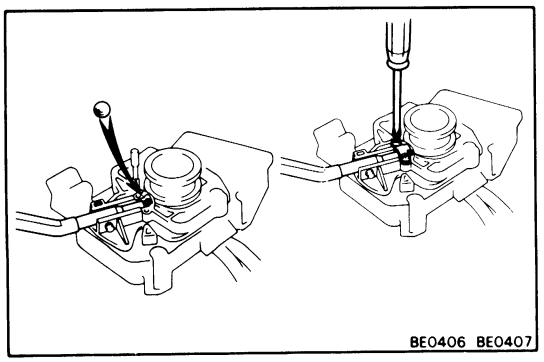

(h) Place the ball on the spring, position the lever at HI and install the plate.

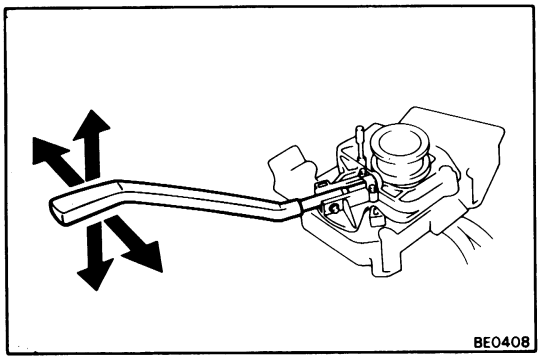

(i) Insure that the switch operates smoothly.

(j) Install the terminals to the connector. (See pages BE-3, 13)

Headlight Control Relay

INSPECTION OF HEADLIGHT CONTROL RELAY

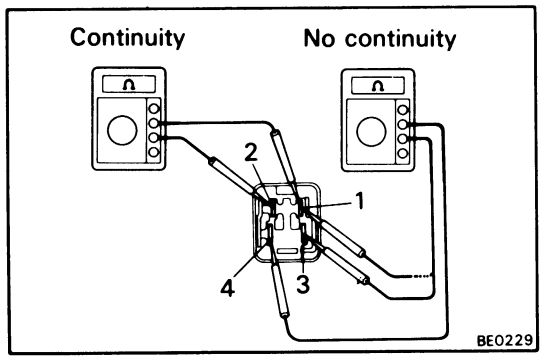

1. INSPECT RELAY CONTINUITY

(a) Check that there is continuity between terminals 1 and 2.

(b) Check that there is no continuity between terminals 3 and 4.

(c) Check that there is no continuity between terminals 1 and 4.

If continuity is not as specified, replace the relay.

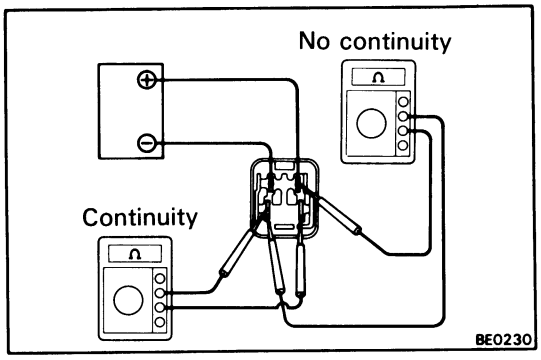

2. INSPECT RELAY OPERATION

(a) Apply battery voltage across terminals 1 and 2.

(b) Check that there is continuity between terminals 3 and 4.

(c) Check that there is no continuity between terminals 1 and 4.

If operation is not as described, replace the relay.

Taillight Control Relay

INSPECTION OF TAILLIGHT CONTROL RELAY

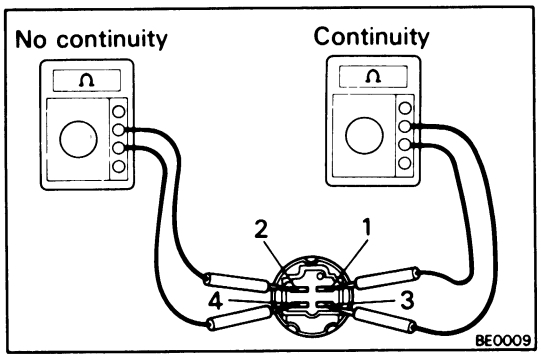

1. INSPECT RELAY CONTINUITY

(a) Check that there is continuity between terminals 1 and 3.

(b) Check that there is no continuity between terminals 2 and 4.

(c) Check that there is no continuity between terminals 3 and 4.

If continuity is not as specified, replace the relay.

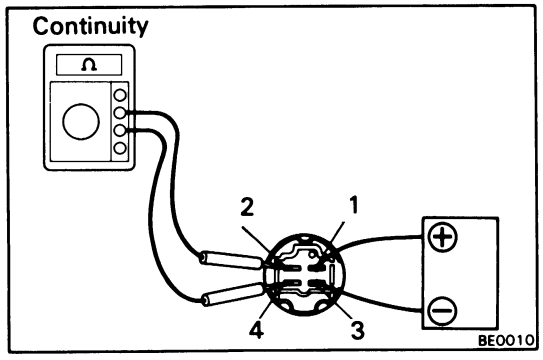

2. INSPECT RELAY OPERATION

(a) Apply battery voltage across terminals 1 and 3.

(b) Check that there is continuity between terminals 2 and 4.

(c) Check that there is no continuity between terminals 3 and 4.

If operation is not as described, replace the relay.

Headlight Retainer Relay

INSPECTION OF HEADLIGHT RETAINER RELAY

1. INSPECT HEADLIGHT CIRCUIT OPERATION

Connect the positive (+) leads from the battery to terminals 4 and 7. Connect the negative (−) lead to terminal 2. Connect the 3.4W test bulb between terminal 8 and positive (+) lead from the battery.

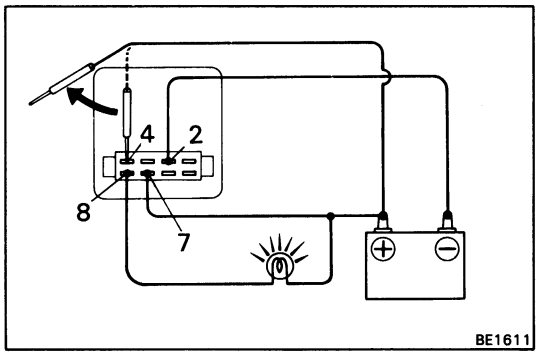

(a) Disconnect the positive (+) lead from the terminal 4. Check that the test bulb is lighting.

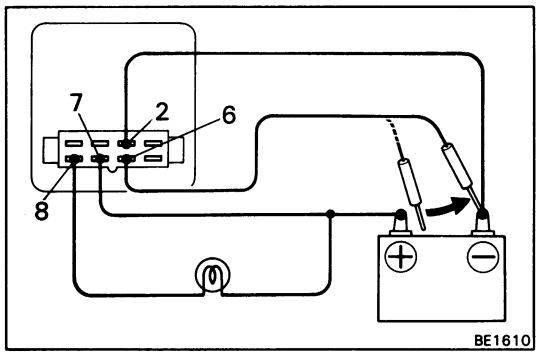

(b) Connect the negative (−) lead to the terminal 6. Check that the test bulb does not light.

If operation is not as specified, replace the relay.

2. INSPECT TAILLIGHT CIRCUIT OPERATION

Connect the positive (+) lead from the battery to terminals 4 and 7. Connect the negative (−) lead to terminal 3. Connect the 3.4W test bulb between terminal 1 and positive (+) lead from the battery.

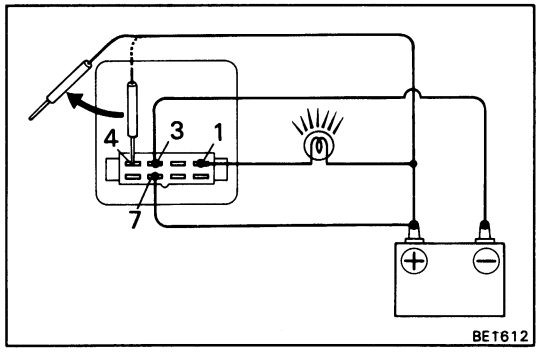

(a) Disconnect the positive (+) lead from the terminal 4. Check that the test bulb is lighting.

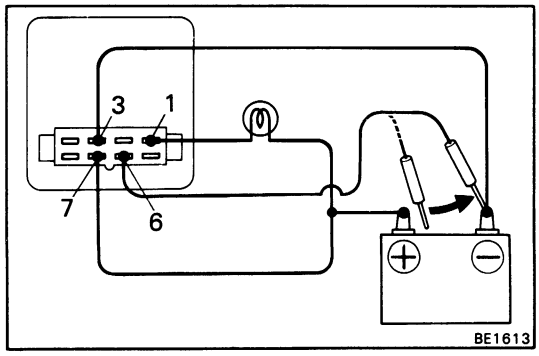

(b) Connect the negative (−) lead to terminal 6. Check that the test bulb does not light.

If operation is not as specified, replace the relay.

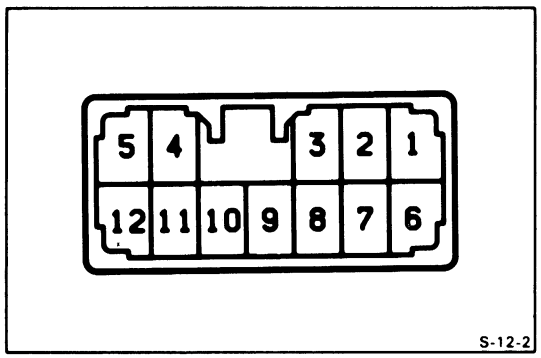

Light Retractor Control Relay

INSPECTION OF LIGHT RETRACTOR CONTROL RELAY

1. INSPECT RELAY CONTINUITY

Inspect the relay continuity between terminals.

Condition \ Terminal	1	2	3	4	5	12
Standard inspection	○	○	○	○	○	○
With battery voltage applied between terminals 3 and 2	○		○			
With battery voltage applied between terminals 3 and 5			○	○		

If continuity is not as specified, replace the relay.

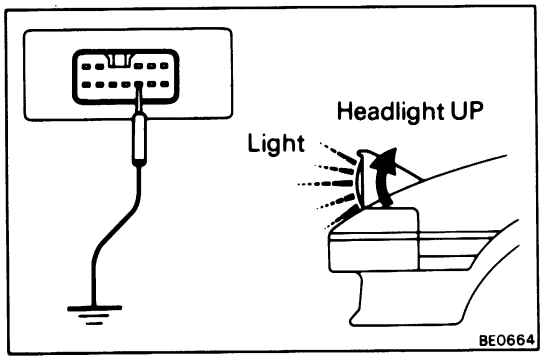

2. INSPECT RELAY OPERATION

(a) With the light control switch off, connector connected, and terminal 8 grounded, raise the headlights with the lights lit.

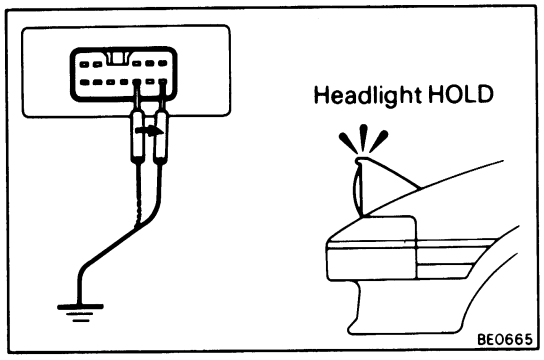

(b) Quickly ground terminal 6. The light will go out, but the headlight will remain up.

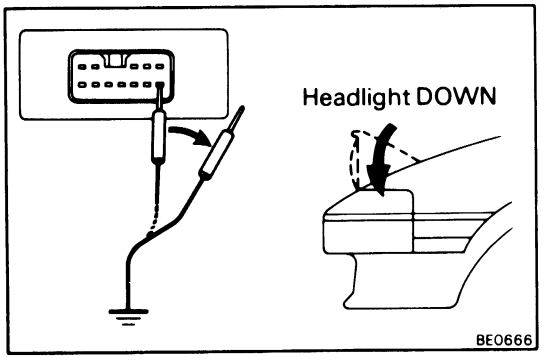

(c) When terminal 6 is taken off ground, the headlights will flip down.

If operation is not as specified, replace the relay.

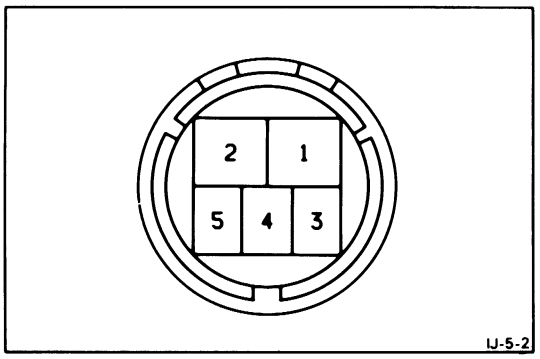

Light Retractor Motor

INSPECTION OF LIGHT RETRACTOR MOTOR

1. INSPECT MOTOR OPERATION

Connect the positive (+) lead from the battery to terminal 2 and connect the negative (−) lead to terminal 1. Check that the motor operates.

If there is no motor operation, replace the motor.

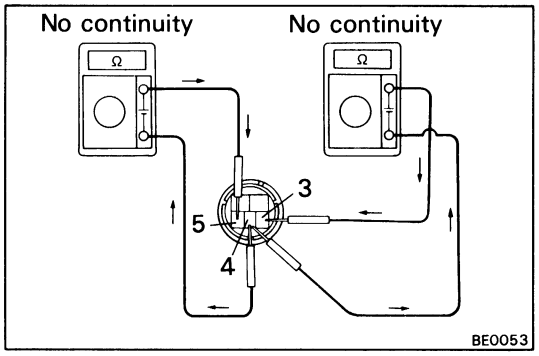

2. INSPECT DIODE CONTINUITY OF MOTOR

(a) Set the motor to any position except the uppermost or lowermost position.

(b) Connect the ohmmeter test lead so that the current from the meter can flow from terminal 5 to 4, check that there is no continuity.

(c) Connect the ohmmeter test lead so that the current from the meter can flow from terminal 3 to 4, check that there is no continuity.

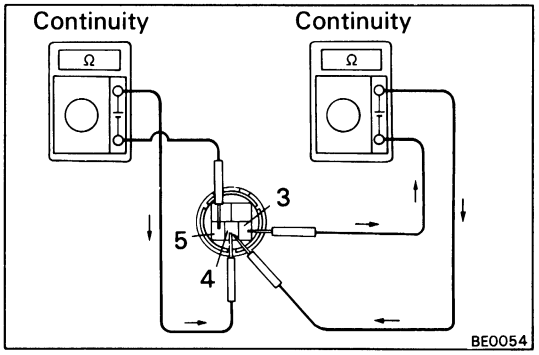

(d) Reverse the test leads of ohmmeter, check that there is continuity.

If continuity is not as specified, replace the motor.

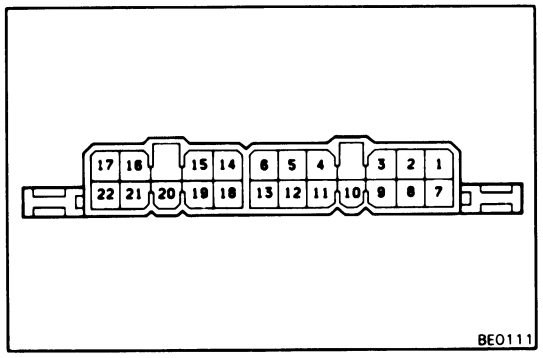

Turn Signal and Hazard Warning Switch

INSPECTION OF TURN SIGNAL AND HAZARD WARNING SWITCH

INSPECT TURN SIGNAL AND HAZARD WARNING SWITCH

Inspect switch continuity between terminals.

Switch position \ Terminal (Wire color)		9 TL (G-B)	3 TB (G-W)	8 TR (G-Y)	2 B1 (G-L)	7 F (G)	1 B2 (G-O)
Turn signal	L	O—O			O—O		
	N				O—O		
	R		O—O		O—O		
Hazard	ON	O—O	O—O			O—O	

If continuity is not as specified, replace the switch.

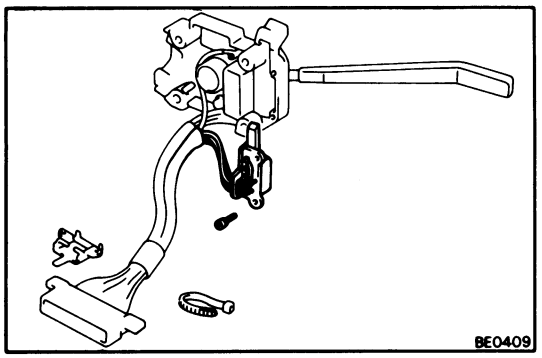

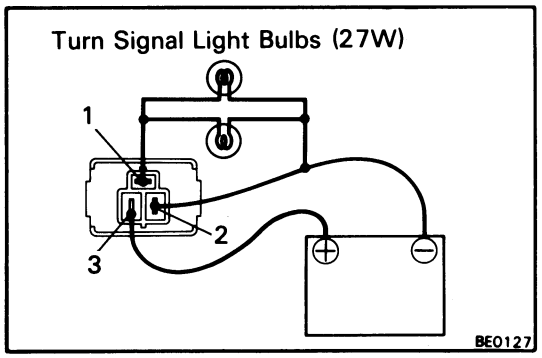

REPLACEMENT OF TURN SIGNAL AND HAZARD WARNING SWITCH

REPLACE TURN SIGNAL AND HAZARD WARNING SWITCH

(a) Remove the terminals from the connector. (See pages BE-2, 3)

(b) Remove the turn signal and hazard switch.

(c) Install the turn signal and hazard switch.

(d) Install the terminals to the connector. (See pages BE-3, 17)

Turn Signal Flasher

INSPECTION OF TURN SIGNAL FLASHER

INSPECT RELAY OPERATION

(a) Connect the positive (+) lead from the battery to terminal 3 and the negative (−) lead to terminal 2.

(b) Connect the two turn signal light bulbs parallel to each other to terminals 1 and 2.
Check that the bulbs turn on and off.

NOTE: The turn signal lights should flash 60 to 120 times per minute.

If one of the front or rear turn signal lights has an open circuit, the number of flashes will be more than 140 per minute.

If operation is not as specified, replace the flasher.

WIPER AND WASHER
Troubleshooting

Problem	Possible cause	Remedy	Page
Wiper does not operate or return to off position	WIPER fuse blown	Replace fuse and check for short	BE-4
	Wiper motor faulty	Check motor	BE-20
	Wiper control switch faulty	Check switch	BE-19
	Wiring or ground faulty	Repair as necessary	
Wiper does not operate in INT position	Wiper control switch faulty	Check switch	BE-19
	Wiper motor faulty	Check motor	BE-20
	Wiring or ground faulty	Repair as necessary	
Washer does not operate	Washer hose or nozzle clogged	Repair as necessary	
	Wiper control switch faulty	Check switch	BE-19
	Wiring faulty	Repair as necessary	

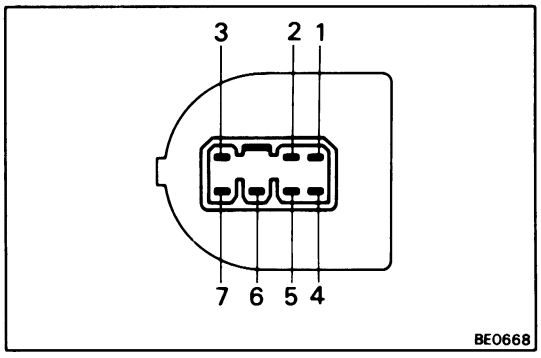

Wiper and Washer Switch

INSPECTION OF WIPER AND WASHER SWITCH

1. INSPECT WIPER AND WASHER SWITCH CONTINUITY

Inspect the switch continuity between terminals.

Switch position \ Terminal	2 +B	1 +2	3 +1	5 +S	4 E	7 W
MIST	○	○	○			
OFF			○	○		
INT			○	○		
LO	○	○	○			
HI	○	○				
Washer					○	○

If continuity is not as specified, replace the switch.

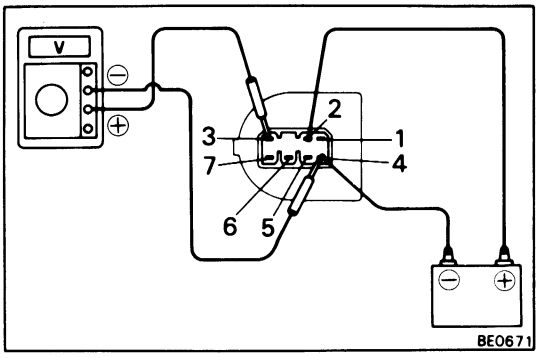

2. INSPECT INTERMITTENT OPERATION

(a) Turn the wiper switch to INT position.

(b) Connect the positive (+) lead from the battery to terminal 2 and the negative (−) lead to terminal 4.

(c) Connect the positive (+) lead from the voltmeter to terminal 3 and the negative (−) lead to terminal 4.

Check that the meter needle indicates battery voltage.

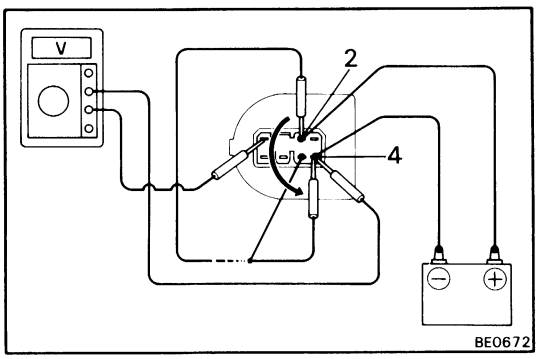

(d) After connecting terminal 5 to terminal 2, connect it to terminal 4.
Then, check that the voltage rises from 0 volts to battery voltage within 3 to 5 seconds.

If operation is not as specified, replace the switch.

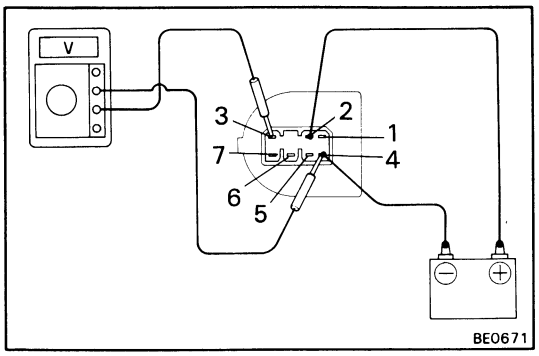

3. INSPECT WASHER SWITCH OPERATION

(a) Connect the positive (+) lead from the battery to terminal 2 and the negative (−) lead to terminal 4.

(b) Connect the positive (+) lead from the voltmeter to terminal 3 and the negative (−) lead to terminal 4.

(c) Push in the washer switch. Check that the voltage changes as shown in the table.

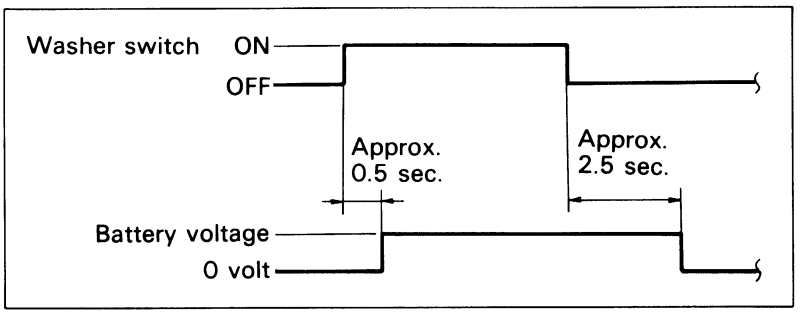

If operation is not as specified, replace the wiper and washer switch.

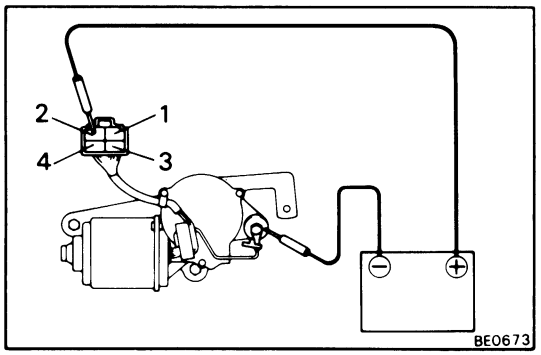

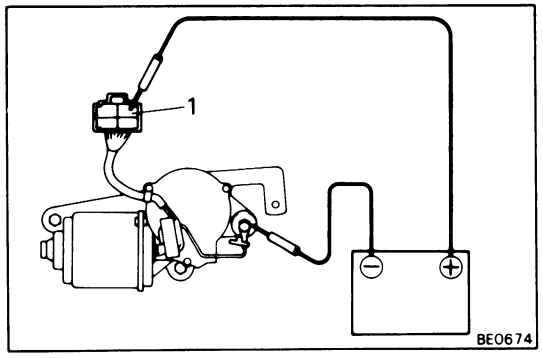

Wiper Motor

INSPECTION OF WIPER MOTOR

1. INSPECT THAT MOTOR OPERATES AT LOW SPEED

(a) Disconnect the connector from the wiper motor.

(b) Connect the positive (+) lead from the battery to terminal 2. Connect the negative (−) lead to the motor body.

(c) Check that the motor operates at low speed.

If operation is not as specified, replace the motor.

2. INSPECT THAT MOTOR OPERATES AT HIGH SPEED

(a) Connect the positive (+) lead from the battery to terminal 1. Connect the negative (−) lead to the motor body.

(b) Check that the motor operates at high speed.

If operation is not as specified, replace the motor.

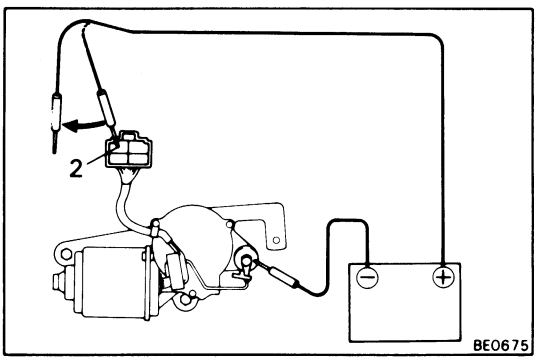

3. INSPECT THAT MOTOR OPERATES, STOPPING AT STOP POSITION

(a) Operate the motor at low speed.

(b) Stop motor operation anywhere except stop position by disconnecting terminal 2.

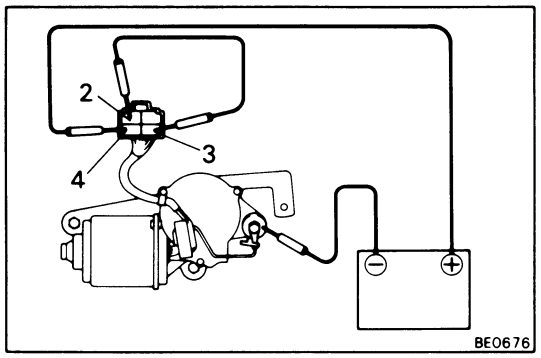

(c) Connect terminals 2 and 3.

(d) Connect the positive (+) lead from the battery to terminal 4.

(e) Check that the motor stops running at stop position after the motor operates again.

If operation is not as specified, replace the motor.

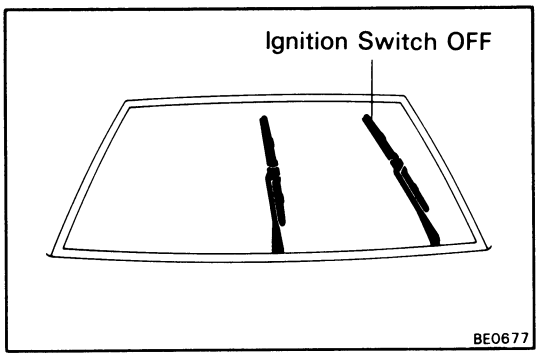

REPLACEMENT OF WIPER MOTOR

1. STOP WIPER ARM IN UP POSITION

(a) Turn the ignition switch to ON.

(b) Turn the wiper switch to low.

(c) With the wiper arm up, turn the ignition switch OFF.

NOTE: If the wiper motor does not operate, disassemble motor and remove the armature.

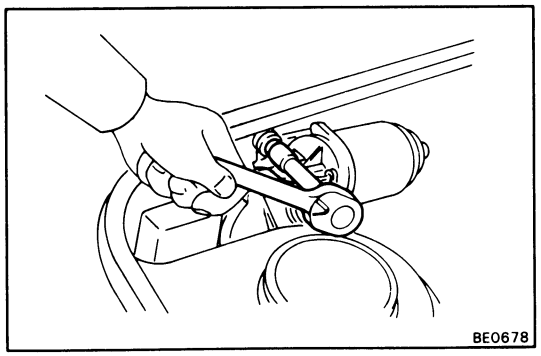

2. REMOVE WIPER MOTOR

(a) Disconnect the connector from the wiper motor.

(b) Remove the light retractor relay from the wiper bracket.

(c) Remove the wiper motor set bolts.

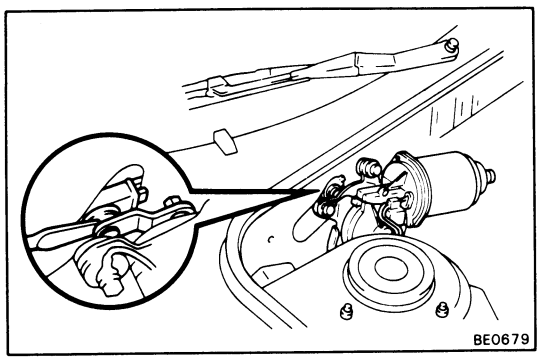

(d) Lower the wiper arm by hand until it stops.
Then hook the wiper link's hook onto the dash panel service hole.

(e) Using a screwdriver, disconnect the motor from the wiper link.

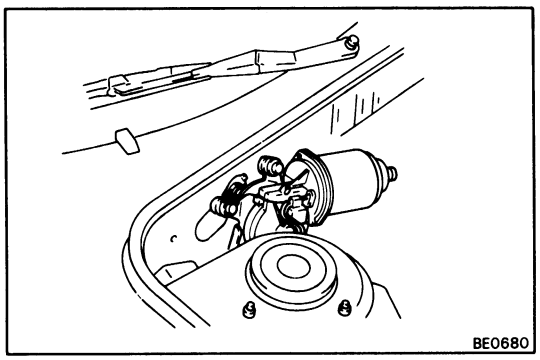

3. INSTALL WIPER MOTOR

(a) Connect the wiper motor to wiper link.

CAUTION: When replacing the motor, rotate the motor crank 180° from the auto-stop position.

NOTE: Supply parts motors come with the crank already rotated.

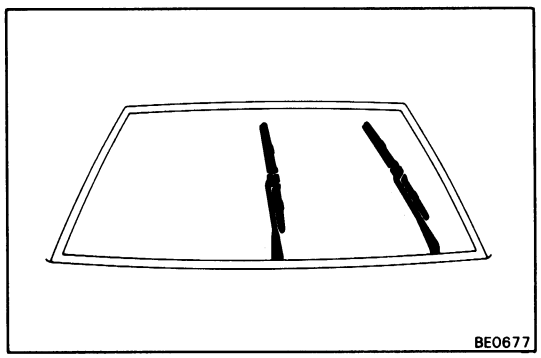

(b) Move the wiper arm to the up position by hand.

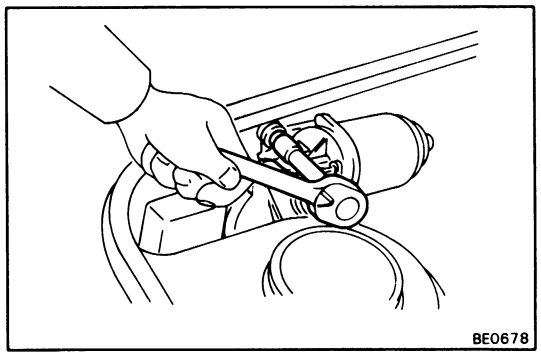

(c) Install the wiper motor set bolts.

(d) Connect the wiper motor connector.

(e) Install the light retractor control relay to the wiper motor bracket.

INSTRUMENTS, GAUGES AND WARNING LIGHTS
Troubleshooting

Problem	Possible cause	Remedy	Page
Voltmeter does not work	Fuses blown	Replace in-line fuses and check for short	BE-4
	Voltmeter faulty	Check voltmeter	BE-25
	Wiring faulty	Repair as necessary	
Tachometer does not work	"TURN GAG" fuse blown	Replace fuse and check for short	BE-4
	Tachometer faulty	Check tachometer	BE-25
	Wiring faulty	Repair as necessary	
Fuel gauge does not work	"TURN GAG" fuse blown	Replace fuse and check for short	BE-4
	Fuel gauge faulty	Check gauge	BE-26
	Sender gauge faulty	Check sender gauge	BE-26
	Wiring or ground faulty	Repair as necessary	
Fuel level warning light does not work	"TURN GAG" fuse blown	Replace fuse and check for short	BE-4
	Bulb burned out	Replace bulb	
	Fuel level warning switch faulty	Check switch	BE-27
	Wiring or ground faulty	Repair as necessary	
Water temperature gauge does not work	"TURN GAG" fuse blown	Replace fuse and check for short	BE-4
	Water temperature receiver gauge faulty	Check gauge	BE-27
	Water temperature sender gauge faulty	Check sender gauge	BE-28
	Wiring or ground faulty	Repair as necessary	
Oil pressure receiver gauge does not work	"TURN GAG" fuse blown	Replace fuse and check for short	BE-4
	Oil pressure receiver gauge faulty	Check receiver gauge	BE-28
	Oil pressure sender gauge faulty	Check sender gauge	BE-28
	Wiring or ground faulty	Repair as necessary	
Brake warning light does not light	"TURN GAG" fuse blown	Replace fuse and check for short	BE-4
	Bulb burned out	Replace bulb	
	Brake fluid level warning switch faulty	Check switch	BE-29
	Parking brake switch faulty	Check switch	BE-29
	Wiring or ground faulty	Repair as necessary	
Discharge warning light does not light	"CHARGE" fuse blown	Replace fuse and check for short	BE-4
	Bulb burned out	Replace bulb	
	Wiring faulty	Repair as necessary	

Combination Meter and Gauge

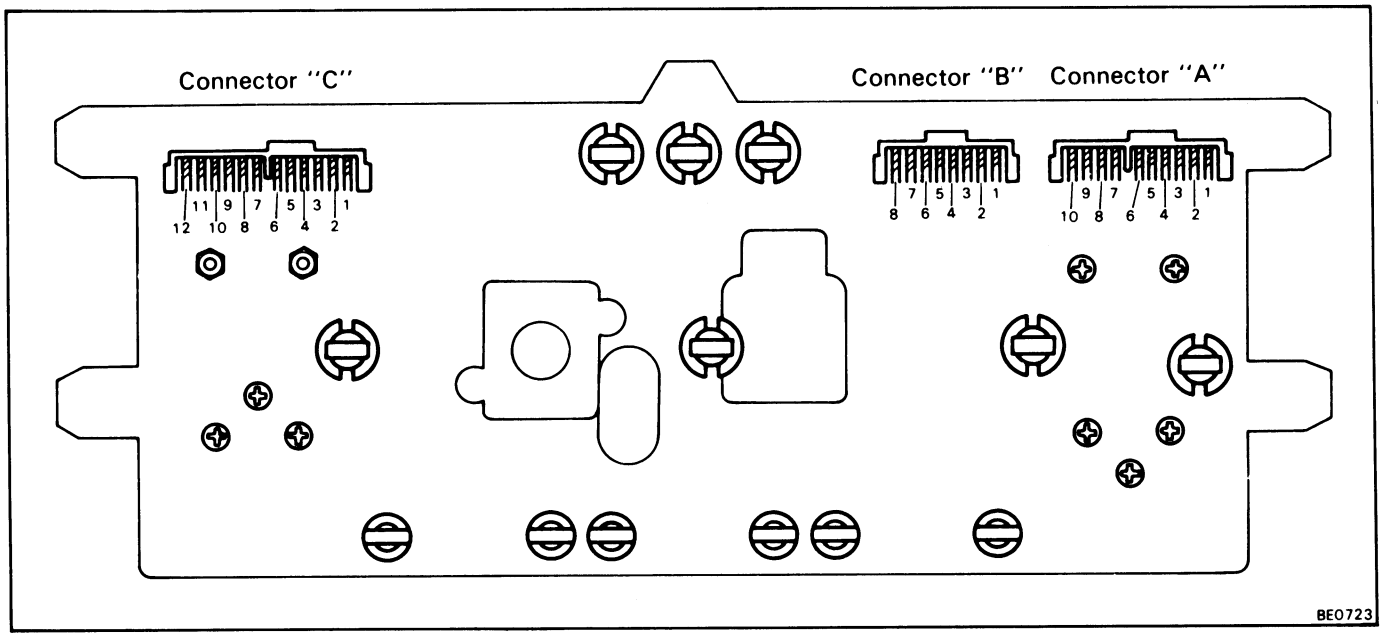

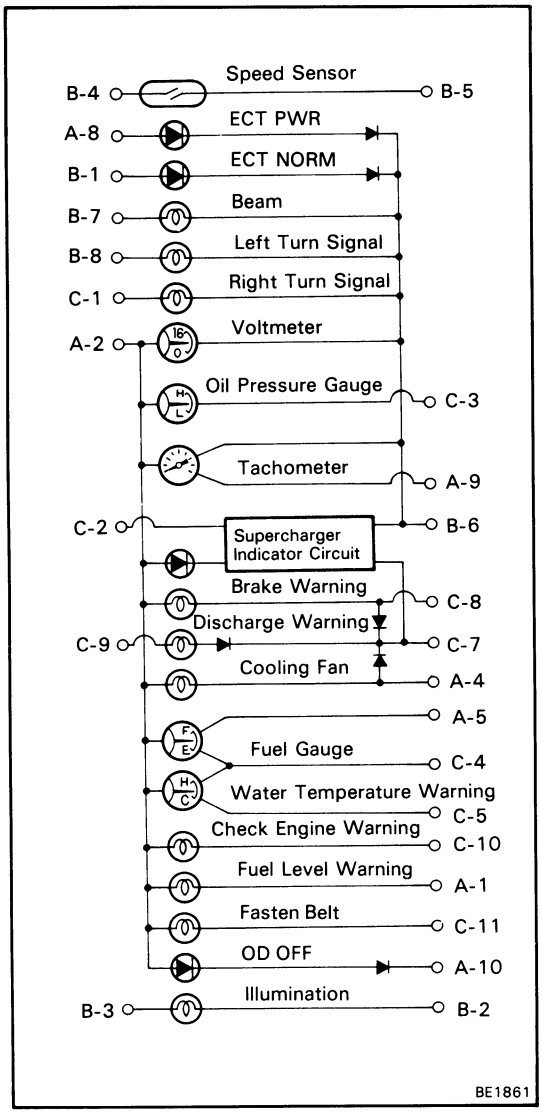

COMBINATION METER CIRCUIT

No.		Wiring connector side
A	1	Fuel Level Warning Switch Terminal 2
	2	TURN GAG Fuse
	4	Cooling Fan Computer
	5	Fuel Sender Gauge Terminal 1
	8	ECT Select Switch
	9	Igniter Terminal 4
	10	OD Main Switch
B	1	ECT Select Switch
	2	Light Control Rheostat Terminal 1
	3	TAIL Fuse
	4	TCCS ECU and Cruise Control Computer Terminal 7
	5	Ground
	6	Ground
	7	Turn Signal Switch Terminal 6
	8	Turn Signal Switch Terminal 9
C	1	Turn Signal Switch Terminal 8
	2	TCCS ECU
	3	Oil Pressure Sender Gauge
	4	Ground
	5	Water Temperature Sender Gauge
	7	CHARGE Fuse
	8	Parking Brake Switch Terminal 1 and Brake Fluid Level Warning Switch Terminal 1
	9	Ignition Switch Terminal 2
	10	TCCS ECU
	11	Seat Belt Warning Relay Terminal 5

[km/h]	
Standard indication	Allowable range
20	18 – 23
40	40 – 44
60	60 – 64.5
80	80 – 85
100	100 – 105
120	120 – 125.5
140	140 – 146
160	160 – 167
180	180 – 188
200	200 – 209

[mph]	
Standard indication	Allowable range
20	20 – 23
40	40 – 43.5
60	60 – 64
80	80 – 84.5
100	100 – 105
120	120 – 125.5

DC 13.5 V 25°C (77°F) [rpm]	
Standard indication	Allowable range
700	610 – 750
800	710 – 850
1,000	940 – 1,140
2,000	1,940 – 2,240
3,000	2,930 – 3,330
4,000	3,970 – 4,370
5,000	5,000 – 5,400
6,000	6,000 – 6,500
7,000	6,990 – 7,590
8,000	8,030 – 8,630

Speedometer

ON-VEHICLE INSPECTION OF SPEEDOMETER

(a) Using a speedometer tester, inspect the speedometer for allowable indication error and check the operation of the odometer.

NOTE: Tire wear and tire over or under inflation will increase the indication error.

If error is excessive, replace the speedometer.

(b) Check the speedometer for pointer vibration and abnormal noise.

NOTE: Pointer vibration can be caused by a loose speedometer cable.

Tachometer

ON-VEHICLE INSPECTION OF TACHOMETER

(a) Connect a tune-up test tachometer, and start the engine.

CAUTION:

- **Reversing the connection of the tachometer will damage the transistors and diodes inside.**
- **When removing or installing the tachometer, be careful not to drop or subject it to any heavy shocks.**

(b) Compare the tester and tachometer indication.

If error is excessive, replace the tachometer.

Voltmeter

INSPECTION OF VOLTMETER

Compare the tester and voltmeter indications.
If error is excessive, replace the voltmeter.

Fuel Gauge

INSPECTION OF FUEL GAUGE

1. INSPECT RECEIVER GAUGE OPERATION

(a) Disconnect the connector from the fuel sender gauge. Turn ignition switch on. Check that the receiver gauge needle indicates EMPTY.

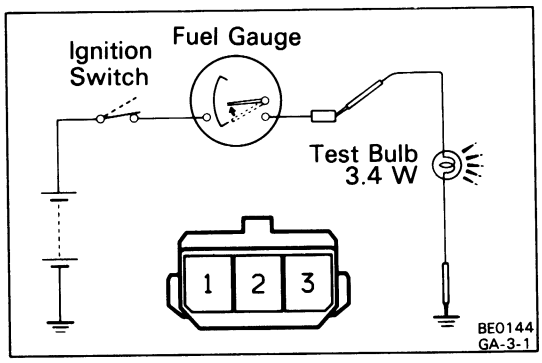

(b) Connect a 3.4 W bulb between terminal 1 and body ground. Check that the bulb lights and that the receiver gauge needle operates.

NOTE: Because of the silicon oil in the gauge, it will take about 180 seconds for the needle to stabilize.

If indications are not correct, remove and test the receiver gauge.

2. MEASURE RECEIVER GAUGE RESISTANCE BETWEEN TERMINALS

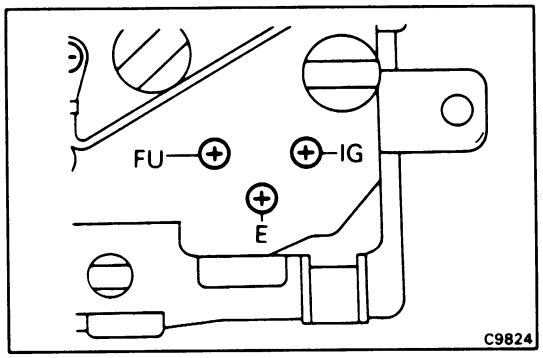

Between terminals	Resistance (Ω)
IG – E	Approx. 203.2
FU – E	Approx. 101.3
IG – FU	Approx. 101.9

If each resistance value is not as shown in the table above, replace the receiver gauge.

3. INSPECT SENDER GAUGE OPERATION

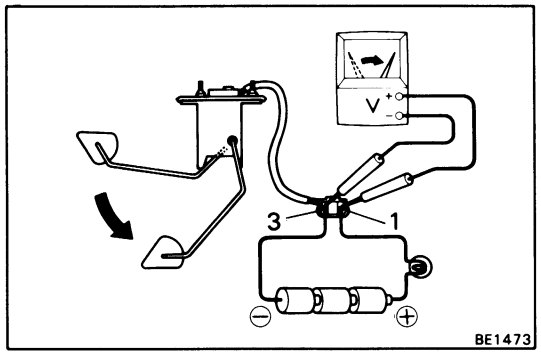

(a) Connect a series of three 1.5 V dry cell batterys.

(b) Connect the positive (+) lead from the dry cell batterys to terminal 1 through a 3.4 W test bulb and the negative (–) lead to terminal 3.

(c) Check that the voltage rises between terminals 1 and 3 as the float is moved from the top to bottom position.

(d) Measure the resistance between terminals 1 and 3 for each float position.

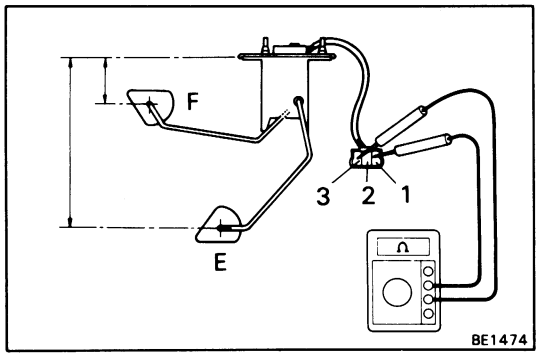

	Float position mm (in.)	Resistance (Ω)
F	69.5 ± 3 (2.736 ± 0.12)	3 ± 1
E	241 ± 3 (9.49 ± 0.12)	110 ± 7.7

If each resistance value is not as shown in the table above, replace the receiver gauge.

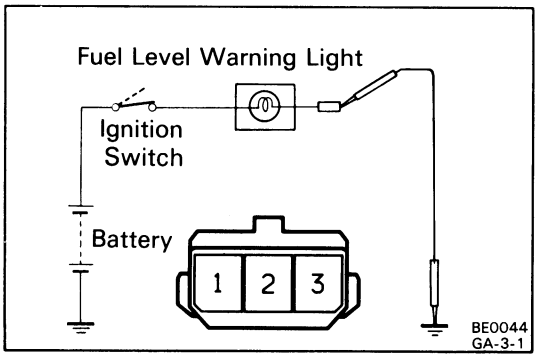

Fuel Level Warning

INSPECTION OF FUEL LEVEL WARNING

1. INSPECT WARNING LIGHT OPERATION

(a) Disconnect the connector from the fuel sender gauge. Connect terminal 2 and body ground.

(b) Turn the ignition switch. Check that the bulb lights.

If operation is not correct, remove and test the bulb.

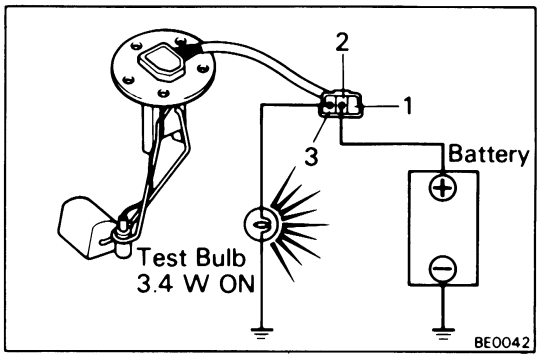

2. INSPECT LEVEL WARNING SWITCH OPERATION

(a) Apply battery voltage between terminals 2 and 3 through a 3.4 W bulb. Check that the bulb lights.

NOTE: This check should be taken in a short time.

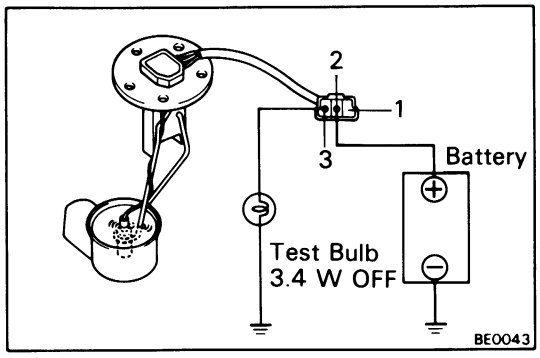

(b) Submerge the switch in gasoline. Check that the bulb goes out.

If operation is not correct, replace the sender gauge.

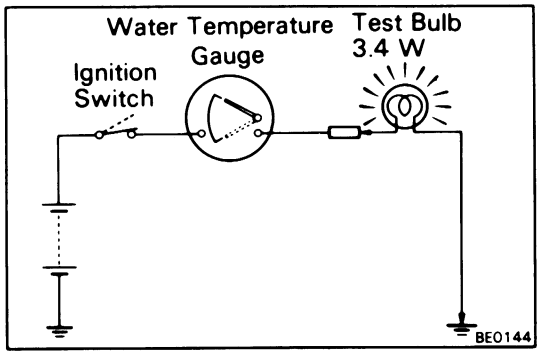

Water Temperature Gauge

INSPECTION OF WATER TEMPERATURE GAUGE

1. INSPECT RECEIVER GAUGE OPERATION

(a) Disconnect the connector from the sender gauge. Ground terminal through a 3.4 W bulb.

(b) Turn the ignition switch on. Check that the bulb lights and that the receiver gauge needle operates.

If indication is not correct, remove and test the receiver gauge.

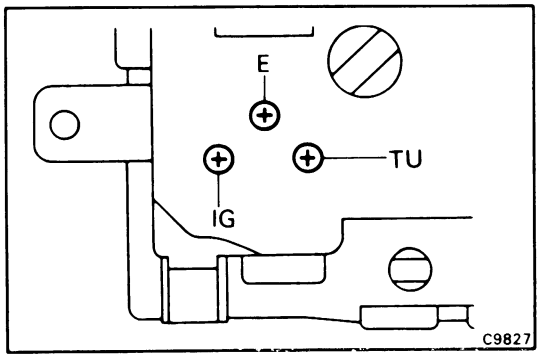

2. MEASURE RECEIVER GAUGE RESISTANCE BETWEEN TERMINALS

Between terminals	Resistance (Ω)
IG – E	145.8
TU – E	201.8
IG – TU	56

If each resistance value is not as shown in the table above, replace the receiver gauge.

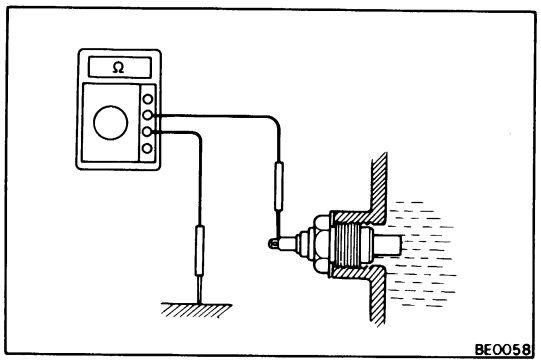

3. MEASURE SENDER GAUGE RESISTANCE

Measure the resistance between the terminal and ground.

Water temperature °C (°F)	Resistance (Ω)
50 (122)	226 $^{+33.6}_{-33.6}$
115 (239)	26.4 $^{+1.71}_{-2.21}$

If each resistance value is not as shown in the table above, replace the sender gauge.

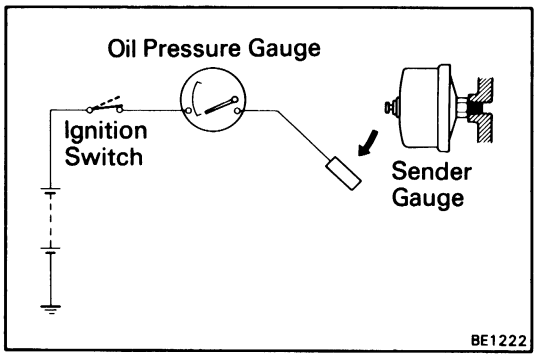

Oil Pressure Gauge

INSPECTION OF GAUGE

1. INSPECT RECEIVER GAUGE OPERATION

(a) Disconnect the connector from the sender gauge.

(b) Turn the ignition switch on. Check that the receiver gauge needle indicates LOW.

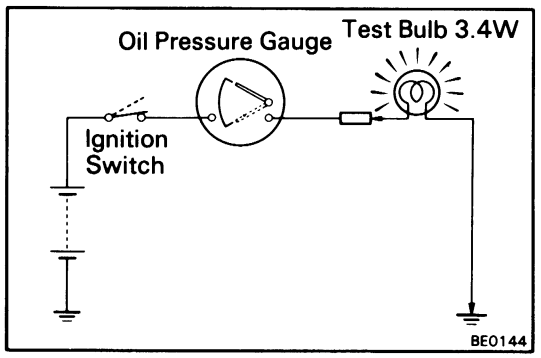

(c) Ground the terminal on the wire harness side connector through a 3.4 W test bulb. Check that the receiver gauge needle moves to the high side.

If operation is not as specified, measure the receiver gauge resistance.

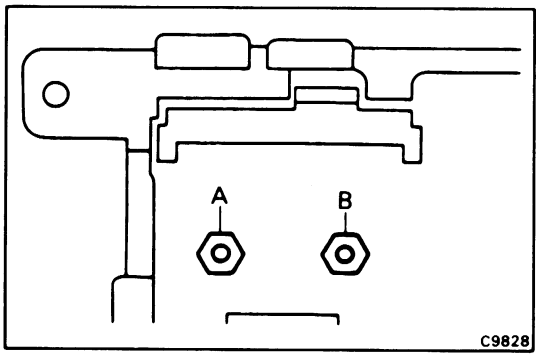

2. MEASURE RESISTANCE OF RECEIVER GAUGE

Using an ohmmeter, measure the resistance between terminals A and B.

Resistance: Approx. 42 Ω

If resistance value is not correct, replace the receiver gauge.

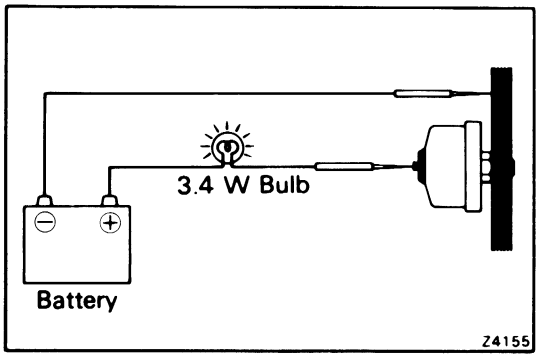

3. INSPECT SENDER GAUGE OPERATION

(a) Disconnect the connector from the sender gauge.

(b) Connect a 12 V battery to the sender gauge terminal in series with a 3.4 W bulb. Check that the bulb does not light when the engine is stopped, and flashes when the engine is running. The number of flashes should vary with engine speed.

If operation is not correct, replace the sender gauge.

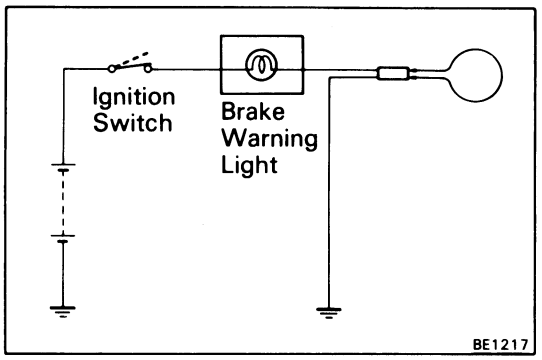

Brake Warning

INSPECTION OF BRAKE WARNING

1. INSPECT WARNING LIGHT OPERATION

(a) Disconnect the connectors from the level warning switch and parking brake switch.

(b) Connect the terminals on the wire harness side of the level warning switch connector.

(c) Remove CHARGE fuse and turn the ignition switch ON. Check that the warning light lights.

If the warning light does not light, test the bulb.

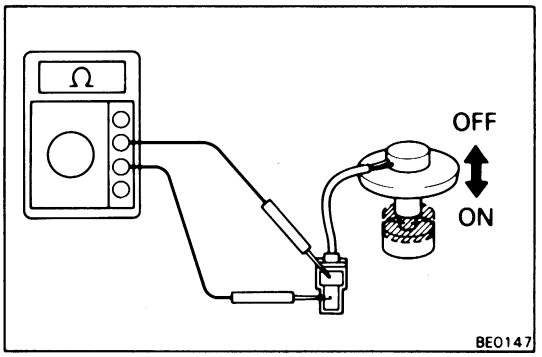

2. INSPECT LEVEL WARNING SWITCH OPERATION

(a) Check that there is no continuity between terminals with the switch OFF (float up).

(b) Check that there is continuity between terminals with the switch ON (float down).

If operation is not as specified, replace the switch.

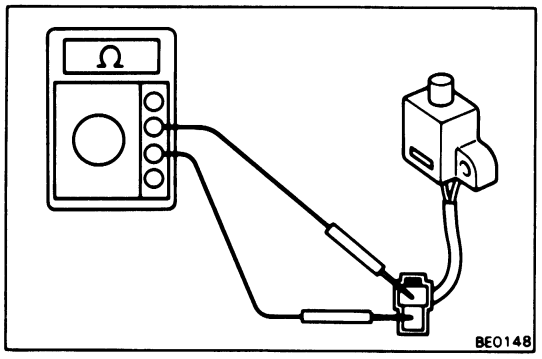

3. INSPECT PARKING BRAKE SWITCH OPERATION

(a) Check that there is continuity between the terminals with the switch pin released.
(Parking brake lever pulled up)

(b) Check that there is no continuity between the terminals with the switch pin pushed in.
(Parking brake lever released)

If the operation is not as specified, replace the switch.

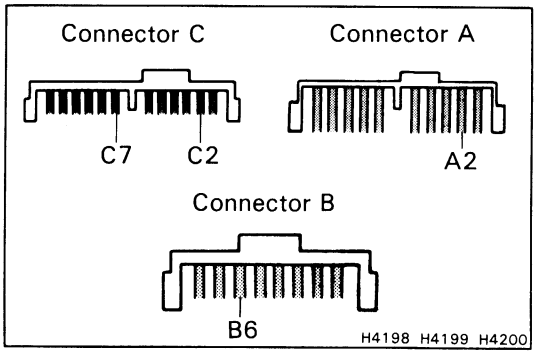

Supercharger Indicator Circuit

INSPECTION OF SUPERCHARGER INDICATOR

1. INSPECT INDICATOR LIGHT OPERATION

(a) Connect the positive (+) leads from the battery to terminals A2 and C7, and the negative (−) lead to terminal B6 on meter side.
Check that the indicator light does not light up.

(b) Connect the negative (−) lead to terminal C2, under the same conditions as in (a).
Check that the indicator light lights up.

(c) Connect the positive (+) lead from the battery to terminal A2 and the negative (−) leads to terminals B6 and C7 on meter side.
Check that the indicator light lights up.

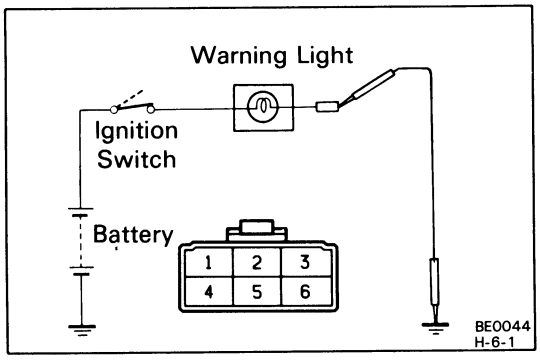

Seat Belt Warning

INSPECTION OF SEAT BELT WARNING

1. INSPECT WARNING LIGHT OPERATION

(a) Disconnect the connectors from the seat belt warning relay and ground terminal 5 on the wire harness side.

(b) Turn the ignition switch ON, check that the warning light lights.

If warning light does not light, test the bulb.

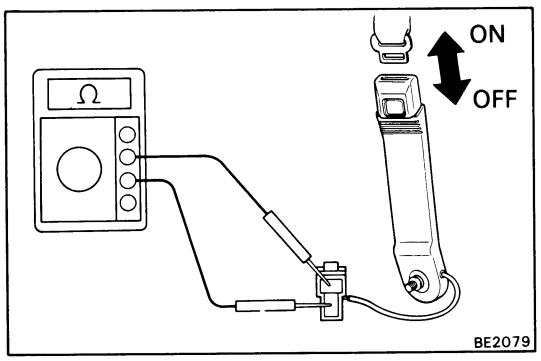

2. INSPECT BUCKLE SWITCH OPERATION

(a) Disconnect the connector from the switch.

(b) Check that there is no continuity between terminals on the switch side connector with the belt fastened.

(c) Check that there is continuity between terminals on the switch side connector with the belt unfastened.

If operation is not as specified, replace the seat belt inner.

3. INSPECT UNLOCK WARNING SWITCH OPERATION (See page BE-10)

If operation is not as specified, replace the switch.

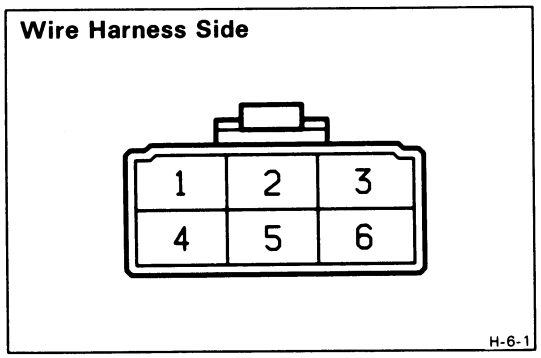

4. INSPECT SEAT BELT WARNING RELAY CIRCUIT

Disconnect the relay connector and inspect the connector on the wire harness side as shown in the chart.

Check for	Tester connection	Condition	Specified value
Voltage	1 – Ground	Courtesy switch OFF (Door closed)	Battery voltage
		Courtesy switch ON (Door opened)	No voltage
	2 – Ground	Turn ignition switch to Lock or ACC	No voltage
		Turn ignition switch ON	Battery voltage
	3 – Ground	Unlock warning switch OFF (Ignition key removed)	No voltage
		Unlock warning switch ON (Ignition key set)	Battery voltage
Continuity	4 – Ground	Always	Continuity
Voltage	5 – Ground	Turn ignition switch to Lock or ACC	No voltage
		Turn ignition switch ON	Battery voltage
Continuity	6 – Ground	Buckle switch OFF (Seat belt fastened)	No continuity
		Buckle switch ON (Seat belt unfastened)	Continuity

If circuit is as specified, replace the relay.

REAR WINDOW DEFOGGER
Troubleshooting

Problem	Possible cause	Remedy	Page
Rear window defogger does not work	DEFOG fuse blown	Replace fuse and check for short	BE-4
	Defogger switch faulty	Check switch	BE-31
	Defogger wire broken	Check wires	BE-31
	Wiring and ground faulty	Repair as necessary	

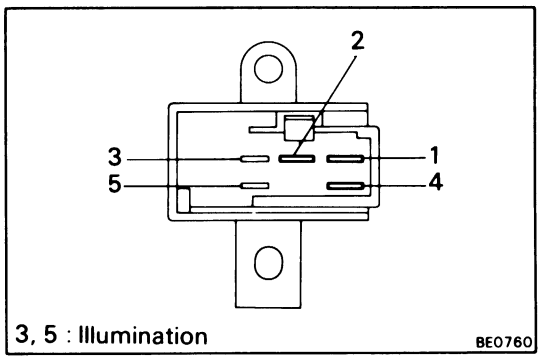

Rear Window Defogger Switch

INSPECTION OF REAR WINDOW DEFOGGER SWITCH

1. INSPECT SWITCH CONTINUITY

Inspect continuity between the terminals.

Switch position \ Terminal	1	2	4
OFF		O	O
ON	O	O	O

If continuity is not as specified, replace the switch or bulb.

2. CHECK THAT IDLE INCREASES

When the defogger switch to ON, engine revolutions should increase.

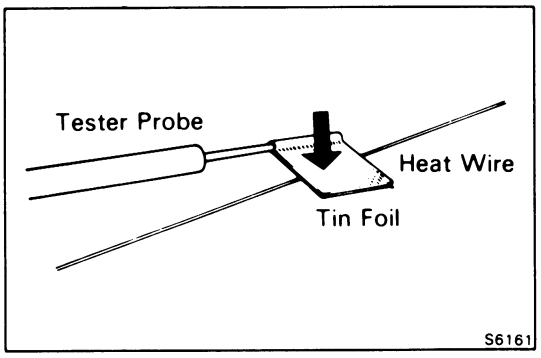

Rear Window Defogger Wires

CAUTION:
- **When cleaning the glass, use a soft, dry cloth, and wipe the glass in the direction of the wire. Take care not to damage the wires.**
- **Do not use detergents or glass cleaners with abrasive ingredients.**
- **When measuring voltage, wind a piece of tin foil around the tip of the negative probe and press the foil against the wire with your finger as shown.**

INSPECTION OF REAR WINDOW DEFOGGER WIRES

1. INSPECT FOR WIRE BREAKAGE

(a) Turn the ignition switch to ON.

(b) Turn the defogger switch to ON.

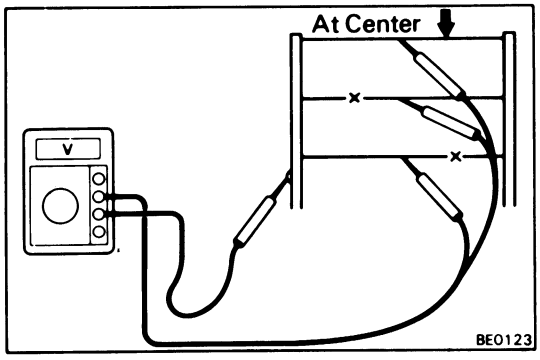

(c) Inspect the voltage at the center of each heat wire as shown.

Voltage	Criteria
Approx. 5V	Okay (No break in wire)
Approx. 10V or 0V	Broken wire

NOTE: If there is 10V, the wire is broken between the center of the wire and positive (+) end. If there is no voltage, the wire is broken between the center of the wire and ground.

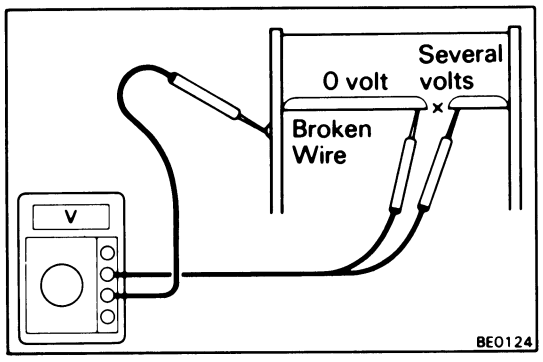

2. INSPECT FOR WIRE BREAKAGE POINT

(a) Place the voltmeter positive (+) lead against the defogger positive (+) terminal.

(b) Place the voltmeter negative (−) lead with the foil strip against the heat wire at the positive (+) terminal end and slide it toward the negative (−) terminal end.

(c) The point where the voltmeter deflects from zero to several volts is the place where the heat wire is broken.

NOTE: If the heat wire is not broken, the voltmeter will indicates 0V at the positive (+) end of the heat wire but gradually increases to about 12V as the meter probe is moved to the other end.

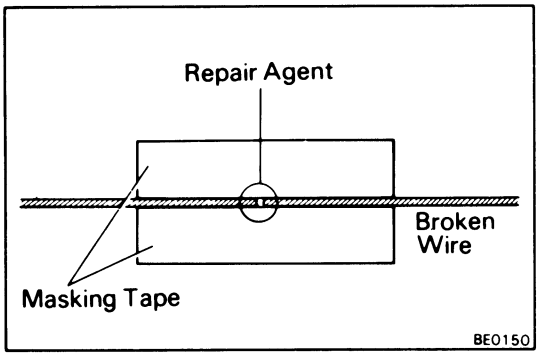

REPAIR OF REAR WINDOW DEFOGGER WIRES

1. CLEAN BROKEN WIRE TIPS WITH CLEANER

2. PLACE MASKING TAPE ALONG BOTH SIDES OF WIRE TO BE REPAIRED

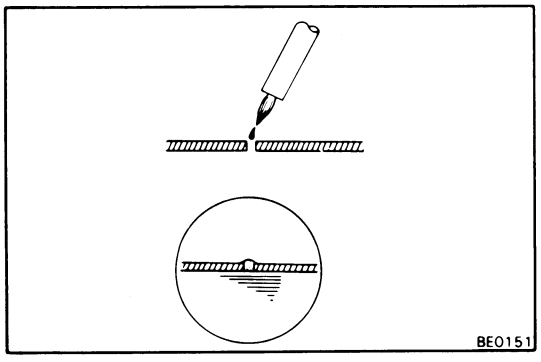

3. REPAIR DEFOGGER WIRES

(a) Thoroughly mix the repair agent (Dupont paste No. 4817).

(b) Using a fine tip brush, apply a small amount to the wire.

(c) After a few minutes, remove the masking tape.

(d) Allow the repair to stand at least 24 hours.

HEATER
Wiring Diagram

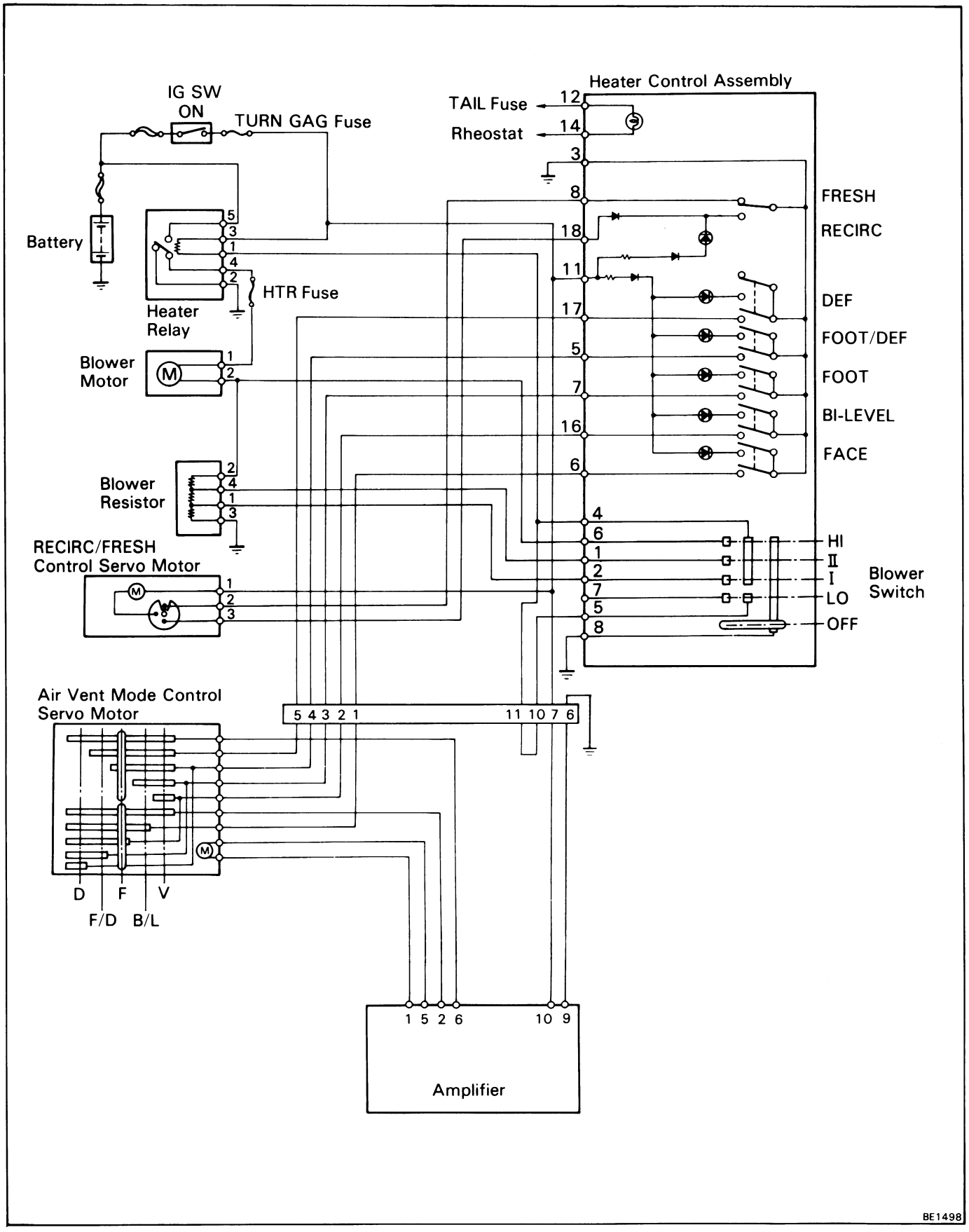

Connectors

Heater Control Assembly

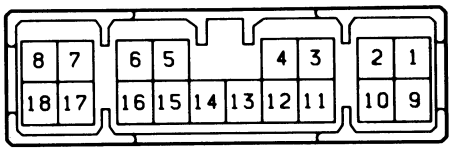

Blower Switch

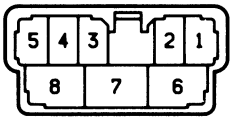

Amplifier

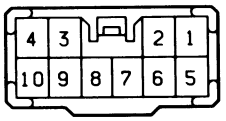

Air Vent Mode Control Servo Motor

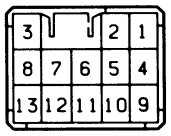

RECIRC/FRESH Control Servo Motor

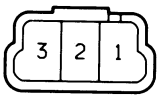

Blower Motor

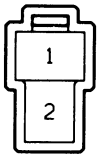

Blower Resistor

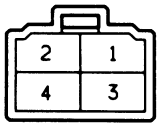

Heater Relay

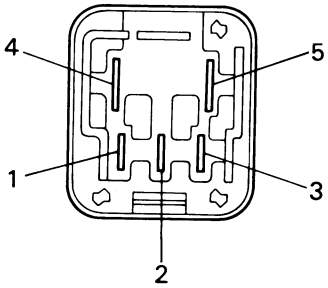

S-18-2, SH-8-2, S-10-2
S-13-2, GA-3-2, H-2-2
H-4-2, BE1013.

Troubleshooting

Problem	Possible cause	Remedy	Page
Blower does not work when fan switch is on	HEATER fuse blown	Replace fuse and check for short	BE-4
	Heater relay faulty	Check relay	BE-35
	Heater blower switch faulty	Check switch	BE-35
	Heater blower resistor faulty	Check resistor	BE-36
	Heater blower motor faulty	Replace motor	
	Wiring or ground faulty	Repair as necessary	
Incorrect temperature output	Control cables broken or binding	Check cables	BE-36
	Servo motor faulty	Check servo motor	BE-37
	Heater hoses leaking or clogged	Replace hose	
	Water valve faulty	Replace valve	
	Air dampers broken	Repair dampers	
	Air ducts clogged	Repair ducts	
	Heater radiator leaking or clogged	Replace radiator	
	Heater control unit faulty	Repair control unit	

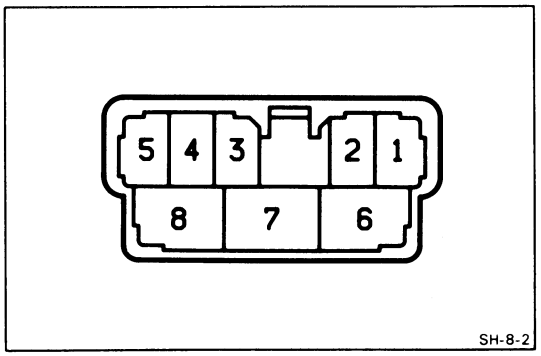

Heater Blower Switch

INSPECTION OF HEATER BLOWER SWITCH

INSPECT SWITCH CONTINUITY

Switch position \ Terminal	1	2	4	5	6	7	8
OFF							
LO				○	—	—	○
II		○	○	—	—	—	○
III	○	—	○	—	—	—	○
HI			○	—	○	—	○

If continuity is not as specified, replace the switch.

Heater Relay

INSPECTION OF HEATER RELAY

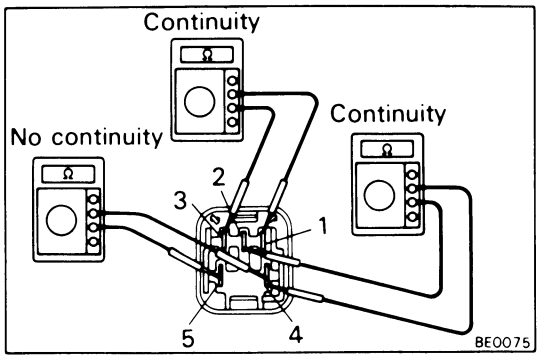

1. **INSPECT RELAY CONTINUITY**
   (a) Check that there is continuity between terminals 1 and 3.
   (b) Check that there is continuity between terminals 2 and 4.
   (c) Check that there is no continuity between terminals 4 and 5.

   If continuity is not as specified, replace the relay.

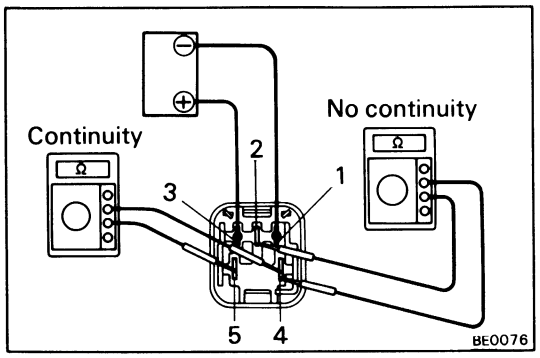

2. INSPECT RELAY OPERATION

(a) Apply battery voltage across terminals 1 and 3.

(b) Check that there is continuity between terminals 4 and 5.

(c) Check that there is no continuity between terminals 2 and 4.

If operation is not as specified, replace the relay.

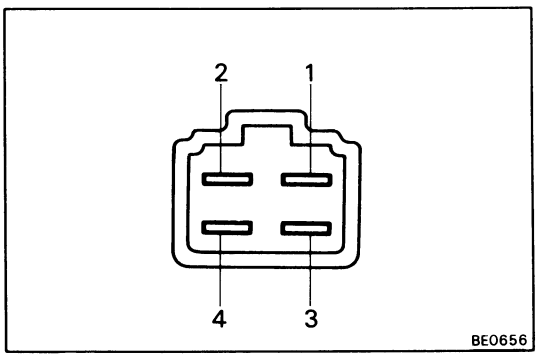

Heater Blower Resistor

INSPECTION OF HEATER BLOWER RESISTOR

INSPECT RESISTOR CONTINUITY

Check that there is continuity between terminals 2 and 3.

If continuity is not as specified, replace the resistor.

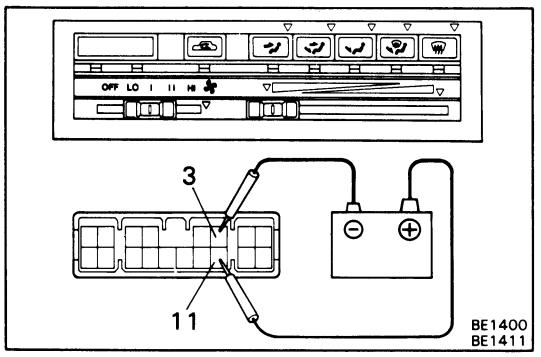

Heater Control Assembly

INSPECTION OF HEATER CONTROL ASSEMBLY

1. INSPECT INDICATOR LIGHT OPERATION

(a) Connect the positive (+) battery lead to terminal 11 and the negative (−) battery lead to terminal 3.

(b) With the RECIRC/FRESH control button pushed in, check that the (RECIRC) indicator light is lit.

(c) Next, press the RECIRC/FRESH control button in again (FRESH) and check that the indicator light goes off.

(d) Press each of the mode buttons in and check that their indicator lights go on.

If operation is not as specified, replace the heater control.

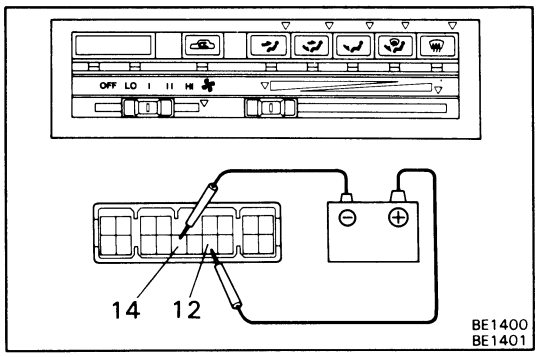

2. INSPECT ILLUMINATION OPERATION

Check that the illumination lights come on when the positive (+) battery lead is connected to terminal 12 and the negative (−) battery lead is connected to terminal 14.

If operation is not as specified, inspect the bulbs.

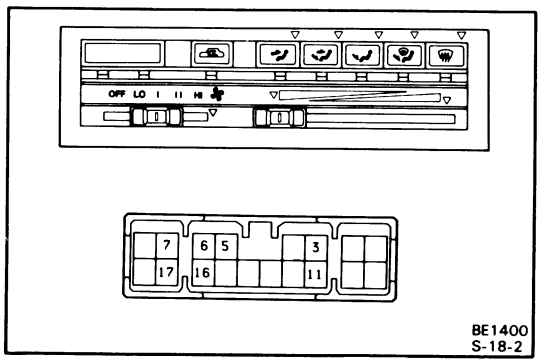

3. INSPECT AIR VENT MODE SWITCH CONTINUITY

Inspect the mode switch continuity between terminals.

Terminal / Switch position	7	6	11	17	16	5	3
FACE		○					○
		○	○		▶		○
BI-LEVEL			○	▶	○		○
FOOT	○						○
	○	◀	○		▶		○
FOOT/DEF			○	▶		○	○
DEF			○	▶	○		○

If continuity is not as specified, replace the switch.

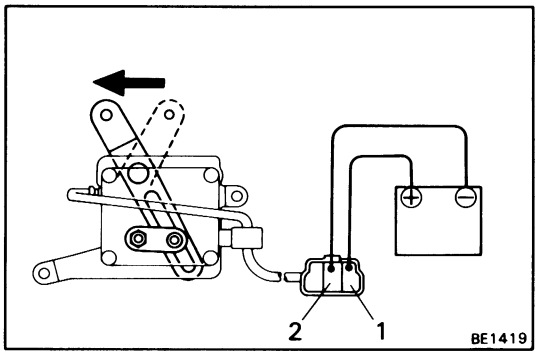

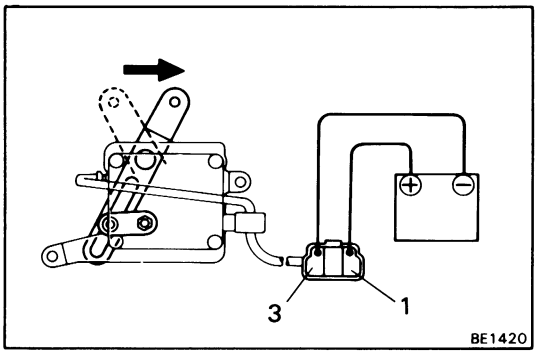

RECIRC/FRESH Control Servo Motor

INSPECTION OF RECIRC/FRESH CONTROL SERVO MOTOR

INSPECT SERVO MOTOR OPERATION

(a) With the positive (+) lead from the battery to terminal 1 and negative (−) lead to terminal 2, and check that the lever moves smoothly from RECIRC to FRESH.

(b) With the positive (+) lead from the battery to terminal 1 and negative (−) lead to terminal 3, and check that the lever moves smoothly from FRESH to RECIRC.

If operation is not as specified, replace the motor.

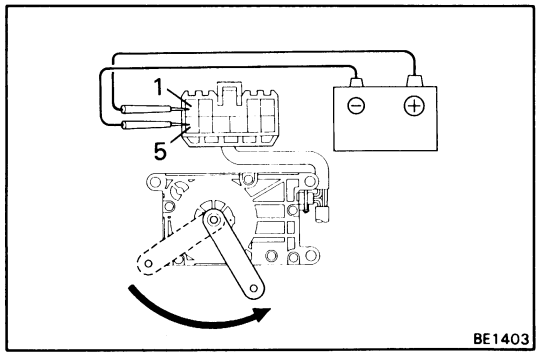

Air Vent Mode Control Servo Motor

INSPECTION OF AIR VENT MODE CONTROL SERVO MOTOR

INSPECT SERVO MOTOR OPERATION

(a) Connect the positive (+) lead from the battery to terminal A1 and the negative (−) lead to terminal A5.

(b) Check that the arm turns.

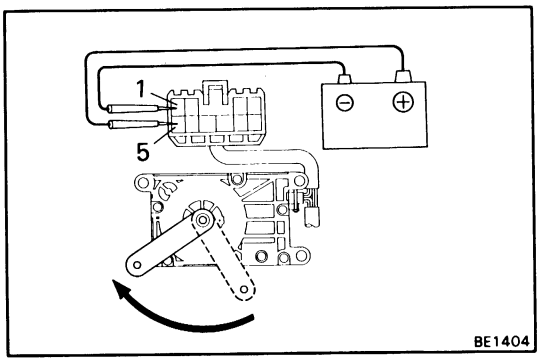

(c) Connect the positive (+) lead from the battery to terminal A5 and the negative (−) lead to terminal A1.

(d) Check that the arm turns the opposite way.

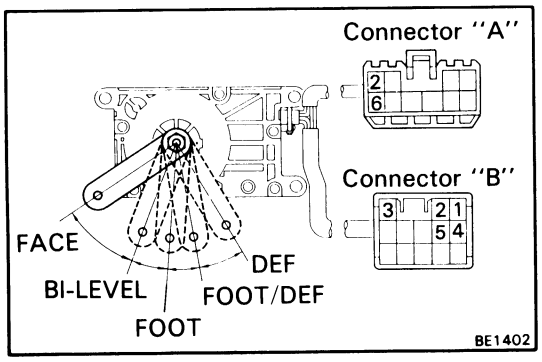

(e) Check for continuity between terminals as shown below.

Terminal / Switch position	A2	A6	B1	B2	B3	B4	B5
FACE		○		○	○	○	○
FACE ~BI-LEVEL	○	○	○	○	○	○	○
BI-LEVEL	○	○	○		○	○	○
BI-LEVEL ~FOOT	○	○	○	○	○	○	○
FOOT	○	○	○	○		○	○
FOOT ~FOOT/DEF	○	○	○	○	○	○	○
FOOT/DEF	○	○	○	○	○		○
FOOT/DEF ~DEF	○	○	○	○	○	○	○
DEF	○		○	○	○	○	

If operation is not as specified, replace the SERVO Motor.

Heater Control

ADJUSTMENT OF HEATER CONTROL

1. ADJUST AIR MIX DAMPER

Set the air mix damper and control lever to "COOL."

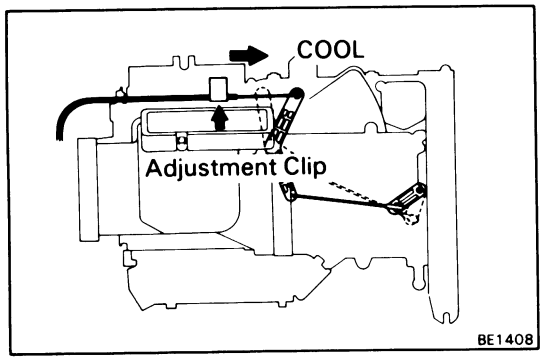

2. ADJUST WATER VALVE

Set the water valve and control lever to "COOL."

NOTE: Place the water valve lever on "COOL" and while pushing the outer cable in the "COOL" direction, clamp the outer cable to the water valve bracket.

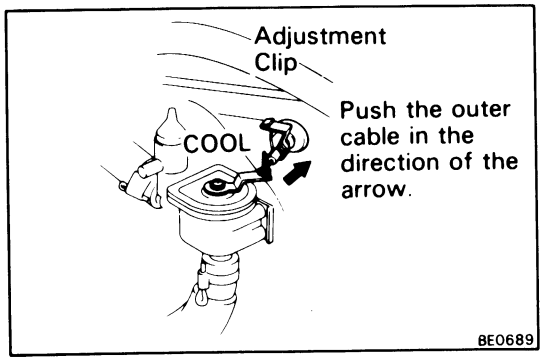

CRUISE CONTROL SYSTEM
Wiring Diagram

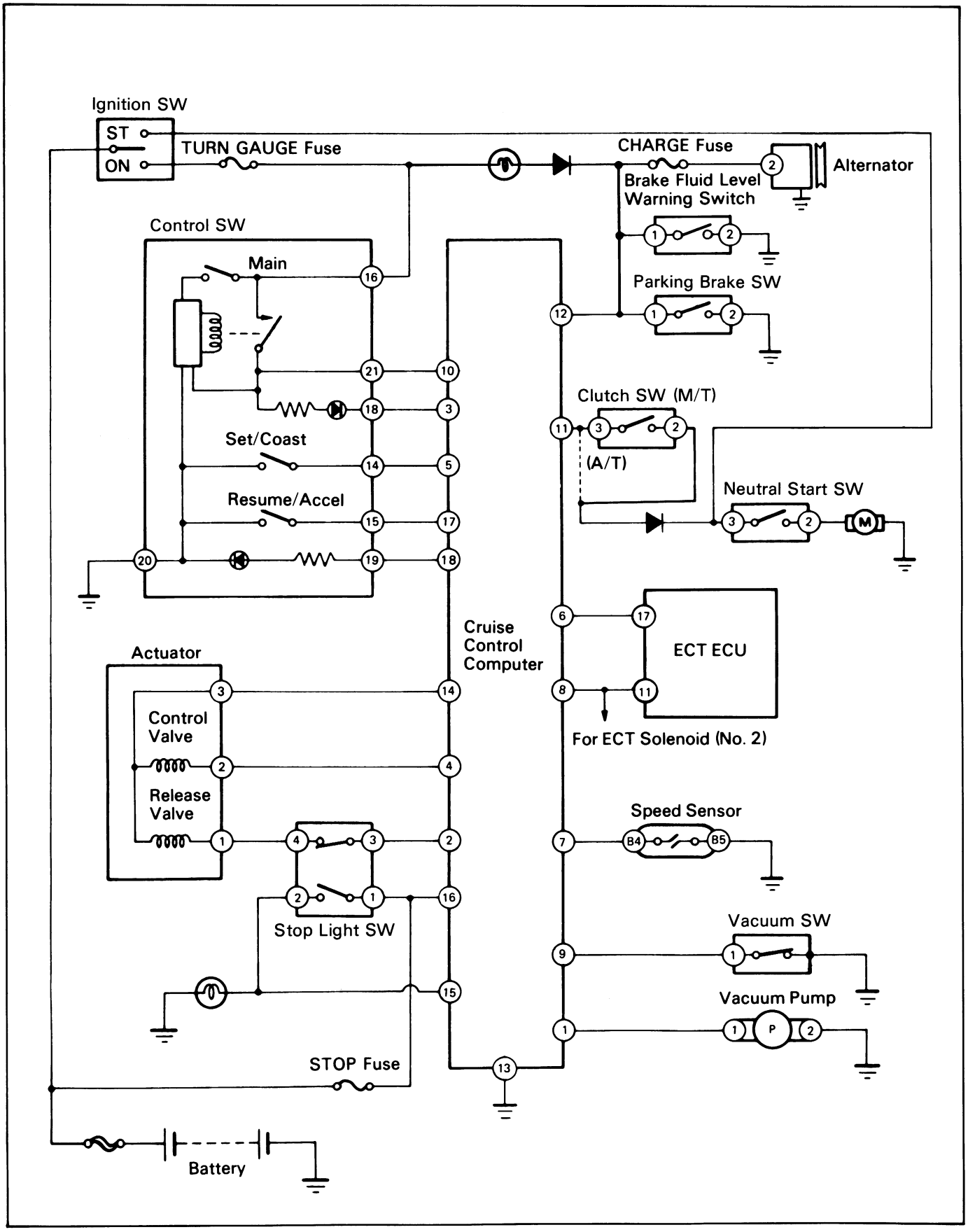

Connectors

Neutral Start Switch

Cruise Control Computer

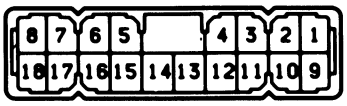

Control SW

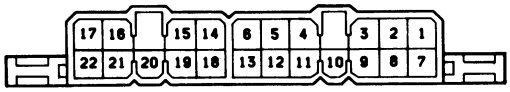

Parking Brake SW

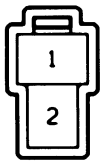

Clutch SW

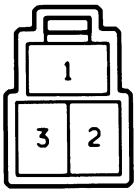

Stop Light SW

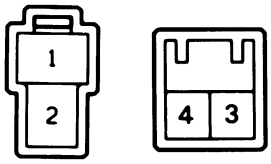

Vacuum SW

(4A-GE: M/T)

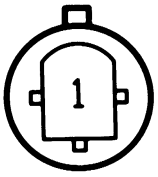

(Others)

Vacuum Pump

(4A-GE: M/T)

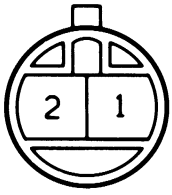

(Others)

Actuator

Speed Sensor

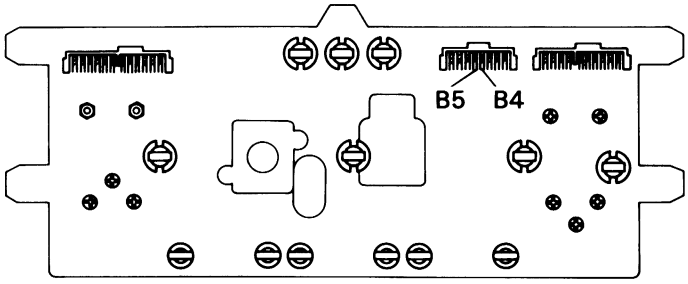

ECT Computer

Wire Harness Side

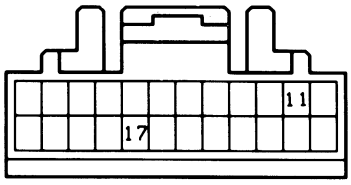

Alternator
Wire Harness Side

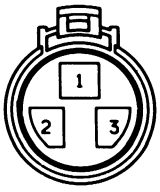

Brake Fluid Level
Warning Switch

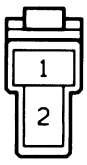

IC-3-2, S-18-2-A, BE0111
H-2-2, H-3-2, H-2-2, G-2-2
IH-1-2, IS-1-2-A, IH-2-2, IS-2-2-0, IS-3-2-A
BE0723, R-24-1
IA-3-1-C, H-2-1

Diagnosis System

OUTPUT OF DIAGNOSTIC CODES

1. READ TYPE A CODE

(a) Turn the ignition switch on.

(b) Turn the set/coast switch on, and keep it on.

(c) Turn the main switch on.

(d) Turn the set/coast switch off.

(e) Meet the conditions listed below.

(f) Read the diagnostic code on the main switch indicator.

No.	Conditions	Indication code	Diagnosis
1	Set/coast switch on	ON OFF 	Set/coast switch circuit is normal.
2	Resume/accel switch on	ON OFF 	Resume/accel switch circuit is normal.
3	Vacuum switch on	ON OFF 	Vacuum switch circuit is normal.
4	Each cancel switch on (Stop light switch, Parking brake switch, Clutch switch, Neutral start switch)	ON OFF 	Each cancel switch circuit is normal.
5	Drive 40 km/h (25 mph) or over	ON OFF 	Speed sensor circuit is normal.
6	Drive 30 km/h (19 mph) or below	ON OFF 	Speed sensor circuit is normal.

NOTE:

- To save time performing the next test, do not turn off the ignition switch when steps (a) – (f) are completed.
- Checking of No. 4 code is done with the vehicle jacked up and the engine idling.
- If there is no indication code, perform diagnosis and inspection. (See page BE-44)

2. READ TYPE B CODE

(a) If while driving with the cruise control on, the system is cancelled by a malfunction in either the actuator, speed sensor, or control switch circuit, the main switch indicator will blink 5 times.

(b) While driving at a speed of 16 km/h (10 mph) or less, press the SET/COAST switch three times in two seconds.

NOTE: In order to retain the diagnostic code when a malfunction has occurred, always inspect with the ignition and main switches on.
Should the power be cut, the diagnostic code will be erased from the computer memory.

(c) Rear the diagnostic code on the main switch indicator.

Indication code		Diagnosis
	ON OFF 0.25S 0.25S	Normal
11	ON OFF 0.5S 1.5S 4S	Actuator circuit is abnormal.
21	ON OFF 0.5S 1.5S	Speed sensor signal circuit is abnormal.
23	ON OFF	* Vehicle speed has decreased by 16 km/h (10mph) or more from the set speed.
31	ON OFF	Resume/accel switch circuit is abnormal.
33	ON OFF	Resume/accel switch and set/coast switch circuit is abnormal.

*: If the set speed can be maintained when the speed control switch is again set at SET/COAST, there is no malfunction.

NOTE:
- Indication codes appear in order from No. 11.
- Indication is stopped when vehicle speed is over 16 km/h (10 mph) or main switch is turned off.
- If there is no indication code, perform diagnosis and inspection. (See page BE-44)

Troubleshooting

Problem	Inspection item		No.
Cruise control does not operate.	(a) Inspect type A codes.	No. 1 NO No. 2 NO No. 3 NO No. 4 NO No. 5 NO No. 6 NO	B C J F to I E E
	(b) Inspect type B codes.	11 21 23 31 33	D E D, E C B, C
	(c) All codes are normal.		A, D, E
Vehicle speed does not decrease when coast switch turned on.	Inspect No. 1 of type A code.	OK NO	D B
Vehicle speed fluctuates when set switch turned on.			
Vehicle speed does not accelerate when accel switch turned on.	Inspect No. 2 of type A code.	OK NO	D C
Vehicle speed does not return to memorized speed when resume switch turned on.			
Setting speed deviates on high side.	—	—	D, E
Setting speed deviates on low side.			
Return and acceleration response is sluggish.	Inspect No. 3 of type A code.	OK NO	D J
Setting speed does not cancel when brake pedal depressed.	Inspect No. 4 of type A code.	OK NO	D F
Setting speed does not cancel when parking brake pulled up.	Inspect No. 4 of type A code.	OK NO	D G
Setting speed does not cancel when clutch pedal depressed (M/T only).	Inspect No. 4 of type A code.	OK NO	D H
Setting speed does not cancel when shifted to "N" range (A/T only).	Inspect No. 4 of type A code.	OK NO	D I
Speed can be set below about 40 km/h (25 mph).	Inspect No. 5 of type A code. Inspect No. 6 of type A code.	OK NO	D E
Cruise control will not disengage even about 40 km/h (25 mph).			
A short period after the O/D cut, (Approx. within 14 seconds) the O/D will resume.	—	—	K

A INSPECTION OF POWER SOURCE CIRCUIT

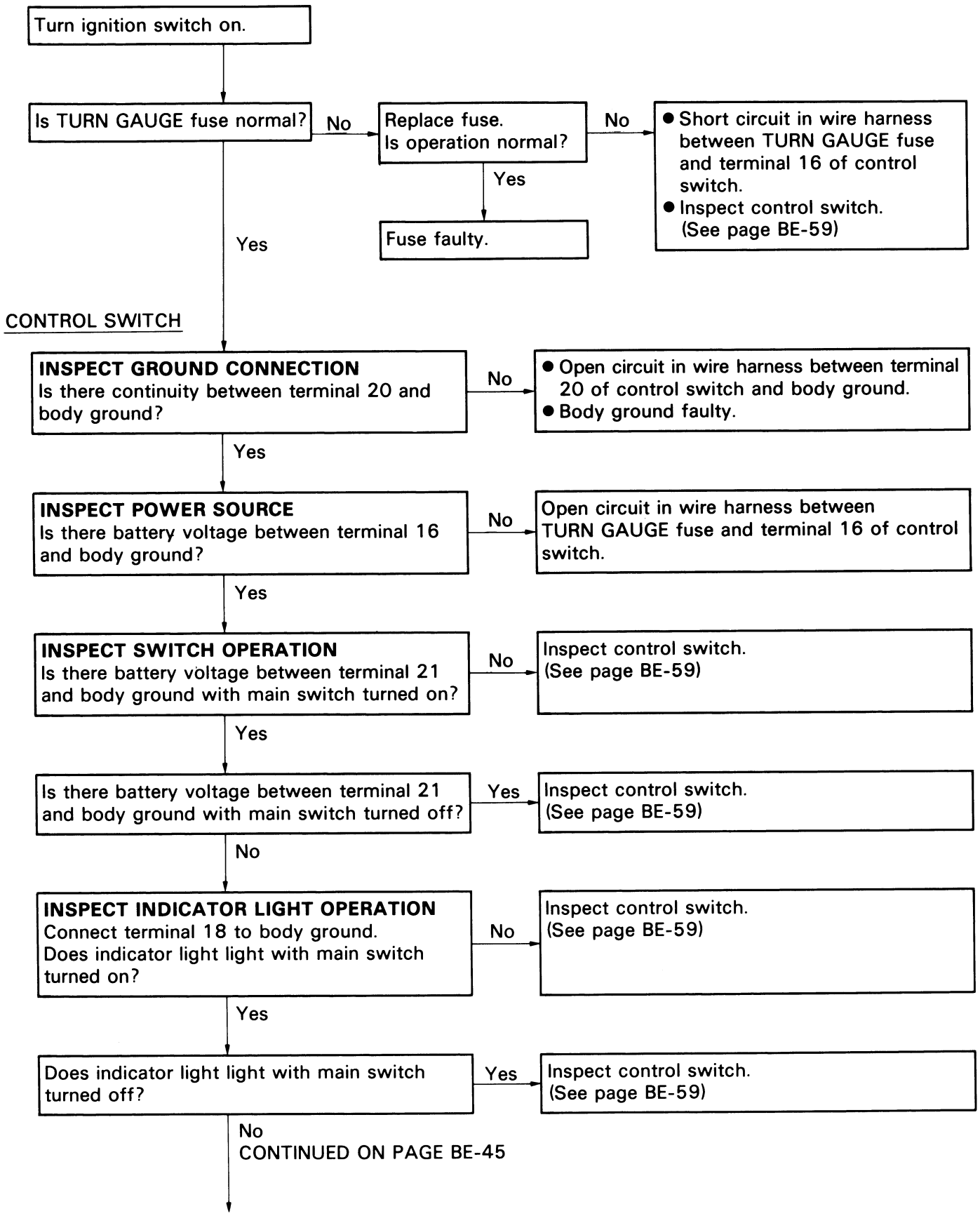

CONTINUED ON PAGE BE-45

CONTINUED FROM PAGE BE-44

COMPUTER

Disconnect connector from computer and inspect connector on wire harness side as follows.

INSPECT GROUND CONNECTION
Is there continuity between terminal 13 and body ground?

No → ● Open circuit in wire harness between terminal 13 and body ground.
● Body ground faulty.

Yes ↓

INSPECT POWER SOURCE
Is there battery voltage between terminal 10 and body ground with main switch turned on?

No → Open circuit in wire harness between terminal 10 of computer and terminal 21 of control switch.

Yes ↓

INSPECT INDICATOR LIGHT CIRCUIT
Connect terminal 3 to body ground.
Does indicator light light with main switch turned on?

No → Open circuit in wire harness between terminal 3 of computer and terminal 18 of control switch.

Yes ↓

Disconnect connector from control switch.
Is there continuity between terminal 3 and body ground?

Yes → Short circuit in wire harness between terminal 3 of computer and terminal 18 of control switch.

No ↓

Replace computer.

B INSPECTION OF SET/COAST SWITCH CIRCUIT

Turn ignition switch off.

CONTROL SW

INSPECT GROUND CONNECTION
Disconnect connector from control switch.
Is there continuity between terminal 20 of wire harness side connector and body ground?

No →
- Open circuit in wire harness between terminal 20 and body ground.
- Body ground faulty.

Yes ↓

INSPECT SET/COAST SWITCH OPERATION
Is set/coast switch operation normal?
(See page BE-59)

No → Replace control switch.

Yes ↓

Connect connector to control switch.

COMPUTER

Disconnect connector from computer and inspect connector on wire harness side as follows.

INSPECT SET/COAST SWITCH CIRCUIT
Is there continuity between terminal 5 and body ground with set/coast switch turned on?

No → Open or short circuit in wire harness between terminal 5 of computer and terminal 14 of control switch.

Yes ↓

Replace computer.

C INSPECTION OF RESUME/ACCEL SWITCH CIRCUIT

Turn ignition switch off.

CONTROL SW

INSPECT GROUND CONNECTION
Disconnect connector from control switch.
Is there continuity between terminal 20 of wire harness side connector and body ground?

No →
- Open circuit in wire harness between terminal 20 and body ground.
- Body ground faulty.

Yes ↓

INSPECT RESUME/ACCEL SWITCH OPERATION
Is resume/accel switch operation normal?
(See page BE-59)

No → Replace control switch.

Yes ↓

Connect connector to control switch.

COMPUTER

Disconnect connector from computer and inspect connector on wire harness side as follows.

INSPECT RESUME/ACCEL SWITCH CIRCUIT
Is there continuity between terminal 17 and body ground with resume/accel switch turned on?

No → Open or short circuit in wire harness between terminal 17 of computer and terminal 15 of control switch.

Yes ↓

Replace computer.

D INSPECTION OF ACTUATOR CIRCUIT

Turn ignition switch off.

VACUUM HOSE

Are there cracks or other damage on the vacuum hose?
- Yes → Replace vacuum hose.
- No ↓

ACTUATOR

INSPECT CABLE FREEPLAY
Is control cable freeplay less than 10 mm (0.39 in.)?
- No → Adjust control cable freeplay.
- Yes ↓

INSPECT ACTUATOR OPERATION
Disconnect connector from actuator.
Is actuator operation normal?
(See page BE-61)
- No → Replace actuator.
- Yes ↓

STOP LIGHT SW

INSPECT STOP LIGHT SWITCH CIRCUIT
Disconnect connector from stop light switch.
Is there continuity between terminal 4 of wire harness side connector and body ground?
- Yes → Short circuit in wire harness between terminal 1 of actuator and terminal 4 of stop light switch.
- No ↓

Connect the connector to actuator.
Is there continuity between terminal 4 of wire harness side connector and body ground?
- No → Open circuit in wire harness between terminal 1 of actuator and terminal 4 of stop light switch
- Yes ↓

INSPECT STOP LIGHT SWITCH OPERATION
Is stop light switch operation normal?
(See page BE-59)
- No → Replace stop light switch.
- Yes ↓

Connect connector to stop light switch.

CONTINUED ON PAGE BE-49

CONTINUED FROM PAGE BE-48

COMPUTER

Disconnect connector from computer and inspect connector on wire harness side as follows.

INSPECT STOP LIGHT SWITCH CIRCUIT
Is there continuity between terminals 2 and 14 with stop light switch released?

- No → Open circuit in wire harness between terminals 2 and 14 of computer.
- Yes ↓

Is there continuity between terminals 2 and 14 with stop light switch depressed?

- Yes → Short circuit in wire harness between terminals 2 and 14 of computer.
- No ↓

Is there continuity between terminals 4 and 14?

- No → Open circuit in wire harness between terminals 4 and 14 of computer.
- Yes ↓

Replace computer.

E INSPECTION OF SPEED SENSOR CIRCUIT

SPEEDOMETER CABLE

INSPECT SPEEDOMETER CABLE
Does the meter fluctuate when driving at a steady speed?

Yes → Meter cable faulty.

No ↓

Turn ignition switch off.

SPEED SENSOR

INSPECT GROUND CONNECTION
Disconnect connector from meter (speed sensor).
Is there continuity between terminal B5 of wire harness side connector and body ground?

No → Open circuit in wire harness between terminal B5 and body ground.

Yes ↓

INSPECT SPEED SENSOR OPERATION
Is speed sensor operation normal?
(See page BE-60)

No → Speed sensor faulty.

Yes ↓

COMPUTER

INSPECT SPEED SENSOR CIRCUIT
Disconnect connector from computer.
Is there continuity between terminal B4 of wire harness side connector and terminal 7 of computer?

No → Open circuit in wire harness between terminal B4 of speed sensor and terminal 7 of computer.

Yes ↓

Replace computer.

F INSPECTION OF STOP LIGHT SWITCH CIRCUIT

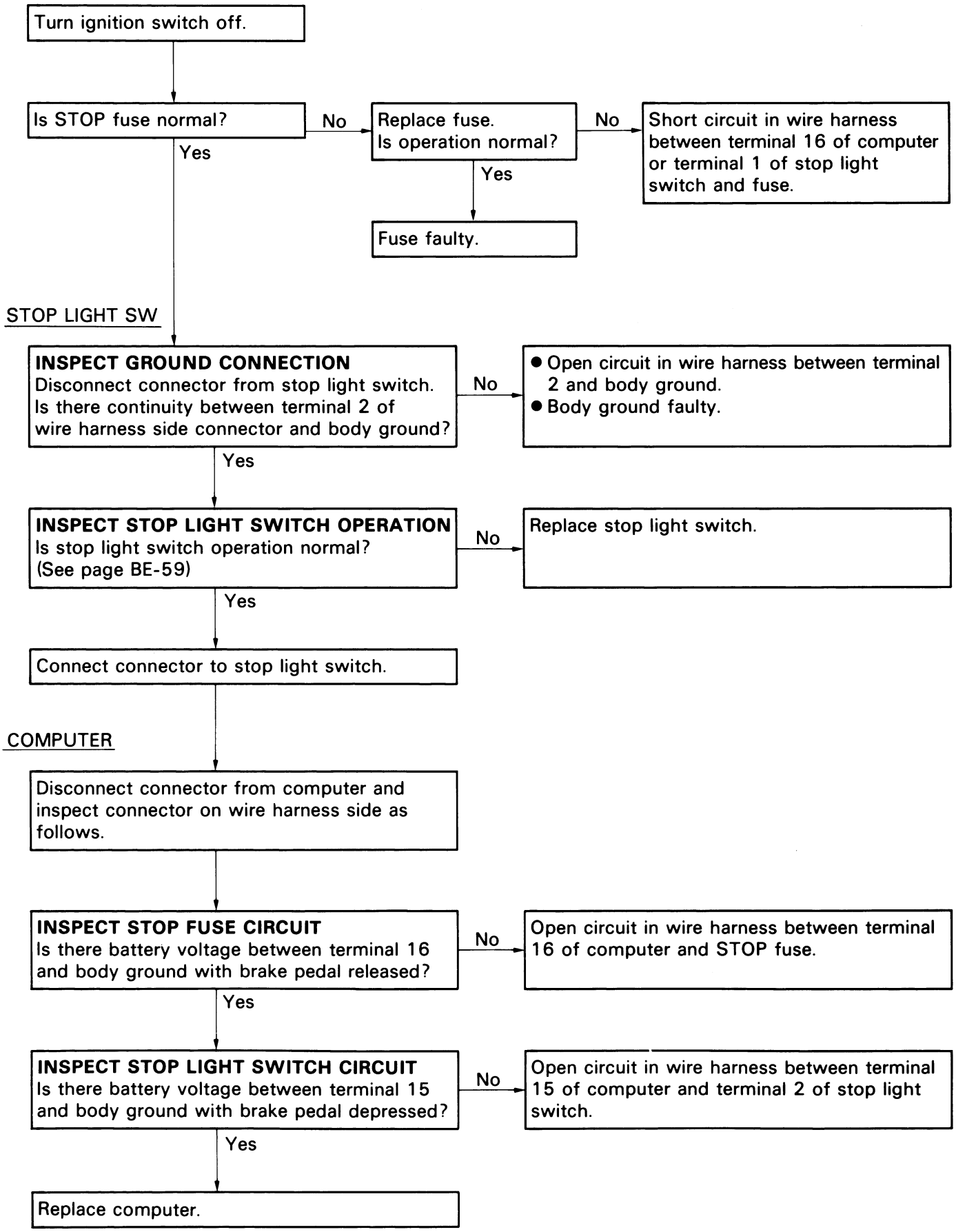

G INSPECTION OF PARKING BRAKE SWITCH CIRCUIT

Turn ignition switch off.

ALTERNATOR

INSPECT ALTERNATOR OPERATION
Is alternator operation normal?
(See page CH-4)

- No → Replace alternator.
- Yes ↓

BRAKE FLUID LEVEL WARNING SWITCH

INSPECT GROUND CONNECTION
Disconnect connector from brake fluid level warning switch. Is there continuity between terminal 2 of wire harness side connector and body ground?

- No → ● Open circuit in wire harness between terminal 2 and body ground. ● Body ground faulty.
- Yes ↓

INSPECT BRAKE WARNING SWITCH
Is brake fluid level warning switch operation normal?
(See page BE-29)

- No → Replace brake warning switch.
- Yes ↓

Connect the connector to brake warning switch.

PARKING BRAKE SWITCH

INSPECT GROUND CONNECTION
Disconnect connector from parking brake switch.
Is there continuity between terminal 2 of wire harness side connector and body ground?

- No → ● Open circuit in wire harness between terminal 2 and body ground. ● Body ground faulty.
- Yes ↓

INSPECT PARKING BRAKE SWITCH OPERATION
Disconnect connector from parking brake switch.
Is parking brake switch operation normal?
(See page BE-60)

- No → Replace parking brake switch.
- Yes ↓

Connect connector to parking brake switch.

COMPUTER

Disconnect connector from computer and inspect connector on wire harness side as follows.

Remove CHARGE fuse and ignition switch turned on.

Is there no voltage between terminal 12 and body ground with parking brake pulled up?

- No → Open circuit in wire harness between terminal 12 of computer and terminal 1 of parking brake switch.
- Yes ↓

Is there battery voltage between terminal 12 and body ground with parking brake released?

- No → Short circuit in wire harness between terminal 12 of computer and terminal 1 of parking brake switch, terminal 1 of brake fluid level warning switch or terminal 2 of alternator.
- Yes ↓

Replace computer.

H INSPECTION OF CLUTCH SWITCH CIRCUIT

Turn ignition switch off.

CLUTCH SW

INSPECT GROUND CONNECTION
Disconnect connector from clutch switch.
Is there continuity between terminal 2 of wire harness side connector and body ground?

No →
- Open circuit in wire harness between terminal 2 and body ground.
- Body ground faulty.

Yes ↓

INSPECT CLUTCH SWITCH OPERATION
Is clutch switch operation normal?
(See page BE-60)

No → Replace clutch switch.

Yes ↓

Connect connector to clutch switch.

COMPUTER

Disconnect connector from computer and inspect connector on wire harness side as follows.

INSPECT CLUTCH SWITCH CIRCUIT
Is there continuity between terminal 11 and body ground with clutch pedal depressed?

No → Open circuit in wire harness between terminal 11 of computer and terminal 3 of clutch switch.

Yes ↓

Is there continuity between terminal 11 and body ground with clutch pedal released?

Yes → Short circuit in wire harness between terminal 11 of computer and terminal 3 of clutch switch.

No ↓

Replace computer.

I INSPECTION OF NEUTRAL START SWITCH CIRCUIT

Turn ignition switch off.

NEUTRAL START SW

INSPECT GROUND CONNECTION
Disconnect connector from neutral start switch.
Is there continuity between terminal 2 of wire harness side connector and body ground?

No → Open circuit in wire harness between terminal 2 and body ground.

Yes ↓

INSPECT NEUTRAL START SWITCH OPERATION
Is neutral start switch operation normal?
(See page BE-60)

No → Replace neutral switch.

Yes ↓

Connect connector to neutral start switch.

COMPUTER

Disconnect connector from computer and inspect connector on wire harness side as follows.

INSPECT NEUTRAL START SWITCH CIRCUIT
Is there continuity between terminal 11 and body ground when shifted to "N" and "P" range?

No → Open circuit in wire harness between terminal 11 of computer and terminal 3 of neutral start switch.

Yes ↓

Replace computer.

J INSPECTION OF VACUUM CIRCUIT

Turn ignition switch off.

VACUUM HOSE

Are there cracks or other damage on the vacuum hose?

- Yes → Replace vacuum hose.
- No ↓

VACUUM SW

INSPECT VACUUM SWITCH CIRCUIT
Disconnect connector from vacuum switch.
Is there continuity terminal 1 of vacuum switch and body ground?

- No →
  - Vacuum switch improperly installed.
  - Body ground faulty.
- Yes ↓

INSPECT VACUUM SWITCH OPERATION
Is vacuum switch normal?
(See page BE-62)

- No → Replace vacuum switch.
- Yes ↓

VACUUM PUMP

INSPECT GROUND CONNECTION
Disconnect connector from vacuum pump.
Is there continuity between terminal 2 of wire harness side connector and body ground?

- No →
  - Open circuit in wire harness between terminal 2 and body ground.
  - Body ground faulty.
- Yes ↓

INSPECT VACUUM PUMP OPERATION
Is vacuum pump operation normal?
(See page BE-62)

- No → Replace vacuum pump.
- Yes ↓

Connect connector to vacuum switch and pump.

CONTINUED ON PAGE BE-56

CONTINUED FROM PAGE BE-55

COMPUTER

Disconnect connector from computer and inspect connector on wire harness side as follows.

INSPECT VACUUM SWITCH CIRCUIT
Is there continuity between terminal 9 and body ground?

- No → Open circuit in wire harness between terminal 9 of computer and terminal 1 of vacuum switch.
- Yes ↓

Start engine (idling).

Is there continuity between terminals 9 and body ground?

- Yes → Short circuit in wire harness between terminal 9 of computer and terminal 1 of vacuum switch.
- No ↓

Stop the engine.

INSPECT VACUUM PUMP CIRCUIT
Is there continuity between terminal 1 and body ground?

- No → Open circuit in wire harness between terminal 1 of computer and terminal 1 of vacuum switch.
- Yes ↓

Is there continuity between terminal 1 and body ground disconnect connector from vacuum pump?

- Yes → Short circuit in wire harness between terminal 1 of computer and terminal 1 of vacuum pump.
- No ↓

Replace computer.

K INSPECTION OF ECT SOLENOID CIRCUIT

Turn ignition switch off.

COMPUTER

Disconnect connector from computer and inspect connector on wire harness side as follows.

INSPECT ECT SOLENOID CIRCUIT
Is there continuity between terminal 8 of wire harness side connector and terminal 11 of ECT computer?

No → Open circuit in wire harness between terminal 8 of computer and terminal 11 of ECT computer.

Yes ↓

Is resistance value about 11 – 15 ohm between terminal 8 of wire harness side connector and body ground?

No → Open or short circuit in wire harness between terminal 8 of computer and terminal 11 of ECT computer or ECT solenoid (No. 2).

Yes ↓

INSPECT OVERDRIVE CIRCUIT
Is there continuity between terminal 6 of wire harness side connector and terminal 17 of ECT computer?

No → Open circuit in wire harness between terminal 6 of computer and terminal 17 of ECT computer.

Yes ↓

Replace computer.

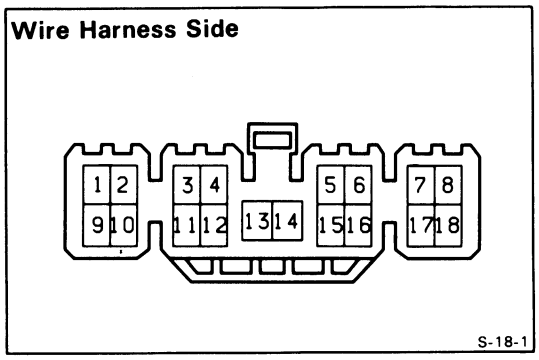

Cruise Control Computer Circuit

INSPECTION OF COMPUTER CIRCUIT

Disconnect the computer connector and inspect the connector on wire harness side as shown in the below.

Connection or measure item	Check for	Tester connection	Condition	Specified value
Stop Fuse	Voltage	16 – Body ground	——	Battery voltage
Stop Light Switch	Voltage	15 – Body ground	Brake pedal depressed	Battery voltage
			Brake pedal released	No voltage
Stop Light Switch and Release Valve	Resistance	2 – 14	Brake pedal released	Approx. 68 Ω
Control Valve	Resistance	4 – 14	——	Approx. 30 Ω
Control Switch	Voltage	10 – Body ground	Turn ignition switch and main switch on	Battery voltage
			Turn ignition switch and main switch off	No voltage
Control Switch (indicator circuit)	Voltage	3 – Body ground	Turn ignition switch and main switch on	Battery voltage
			Turn ignition switch and main switch off	No voltage
Control Switch (set/coast)	Continuity	5 – Body ground	Turn set/coast switch on	Continuity
			Turn set/coast switch off	No continuity
Control Switch (resume/accel)	Continuity	17 – Body ground	Turn resume/accel switch on	Continuity
			Turn resume/accel switch off	No continuity
Speed Sensor	Continuity	7 – Body ground	Vehicle moving slowly	1 pulse each 40 cm (15.75 in.)
Clutch Switch (M/T) or Neutral Start Switch (A/T)	Continuity	11 – Body ground	Clutch pedal depressed or shifted into "N" range	Continuity
			Clutch pedal released or shifted into only range except "N" and "P" range	No continuity
Parking Brake Switch	Voltage	12 – Body ground	Remove CHARGE fuse and ignition switch turned on with parking brake lever pulled up	No voltage
			Remove CHARGE fuse and ignition switch turned on with parking brake lever released	Battery voltage
Vacuum Switch	Continuity	9 – Body ground	Apply vacuum approx. 170 mmHg (6.69 in.Hg, 22.7 kPa)	No continuity
			No vacuum	Continuity
Vacuum Pump	Continuity	1 – Body ground	——	Continuity
Body Ground	Continuity	13 – Body ground	——	Continuity

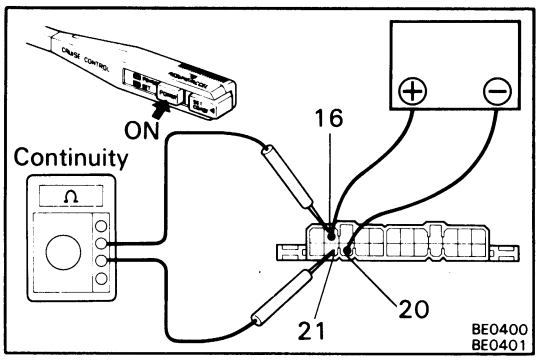

Control Switch

INSPECTION OF CONTROL SWITCH

1. INSPECT SWITCH CONTINUITY

(a) Connect the positive (+) lead from the battery to terminal 16 and the negative (−) lead to terminal 20.

(b) Check that there is continuity between terminals 16 and 21 with the main switch turned on.

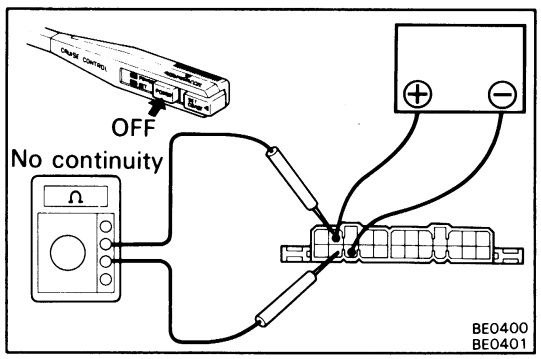

(c) Check that there is no continuity between terminals 16 and 21 with the main switch turned off.

If continuity is not as specified, replace the switch.

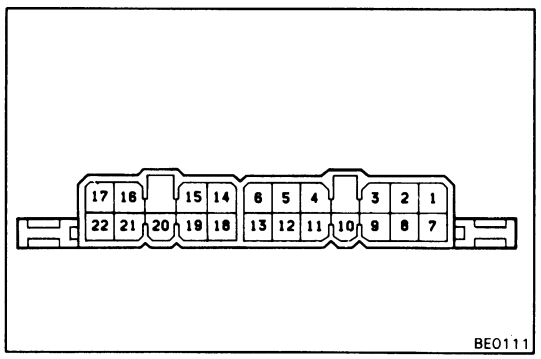

2. INSPECT SWITCH CONTINUITY

Inspect the switch continuity between terminals.

Terminal / Switch position	14	15	20
RESUME/ACCEL		○	○
OFF			
SET/COAST	○		○

If continuity is not as specified, replace the switch.

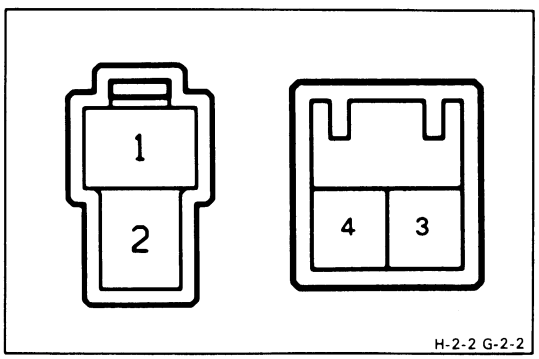

Stop Light Switch

INSPECTION OF SWITCH

INSPECT SWITCH CONTINUITY

Inspect the switch continuity between terminals.

Terminal / Switch position	1	2	3	4
Switch free	○	○		
Switch pin pushed			○	○

If continuity is not as specified, replace the switch.

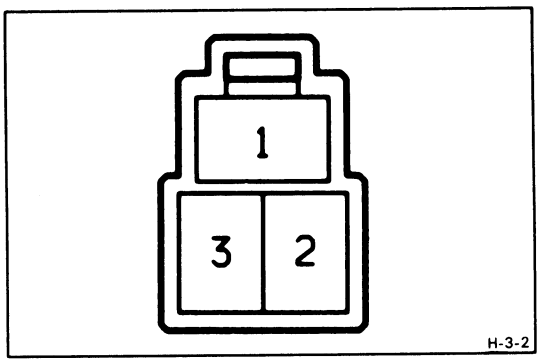

Clutch Switch

INSPECTION OF SWITCH

INSPECT SWITCH CONTINUITY

(a) Check that there is continuity between terminals 2 and 3 with the switch free.
(Clutch pedal depressed)

(b) Check that there is no continuity between terminals 2 and 3 with the switch pin pushed.
(Clutch pedal released)

If continuity is not as specified, replace the switch.

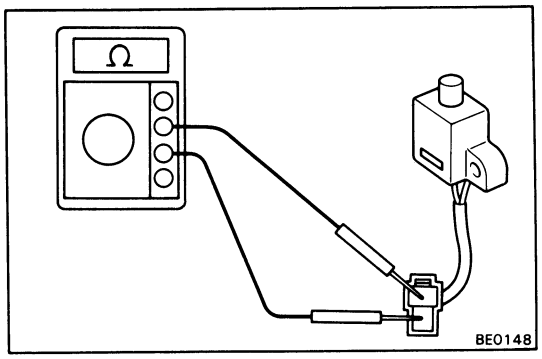

Parking Brake Switch

INSPECTION OF SWITCH

INSPECT SWITCH CONTINUITY

(a) Check that there is continuity between the terminals with the switch free.
(Parking brake lever pulled up)

(b) Check that there is no continuity between the terminals with the switch pin pushed.
(Parking brake lever released)

If continuity is not as specified, replace the switch.

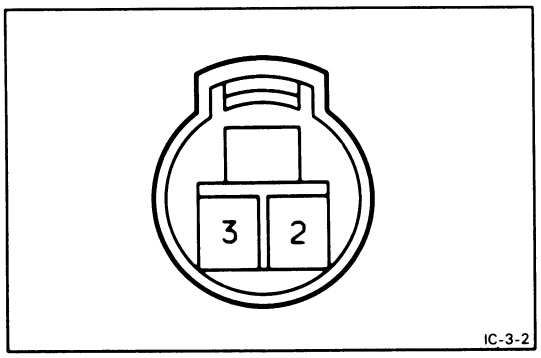

Neutral Start Switch

INSPECTION OF SWITCH

INSPECT SWITCH CONTINUITY

Check that there is continuity between terminals 2 and 3 with switch position "P" and "N" ranges.

If continuity is not as specified, replace the switch.

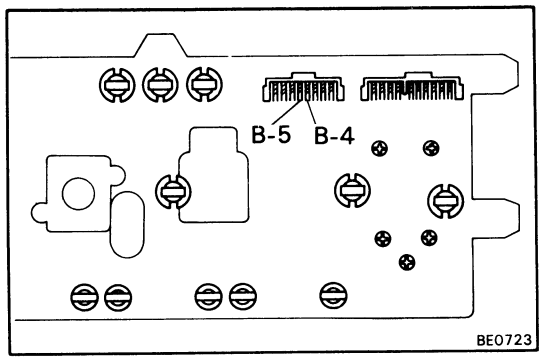

Speed Sensor

INSPECTION OF SENSOR

INSPECT SENSOR CONTINUITY

Check that there is continuity between terminals B4 and B5 four times per each revolution of the shaft.

If continuity is not as specified, replace the sensor.

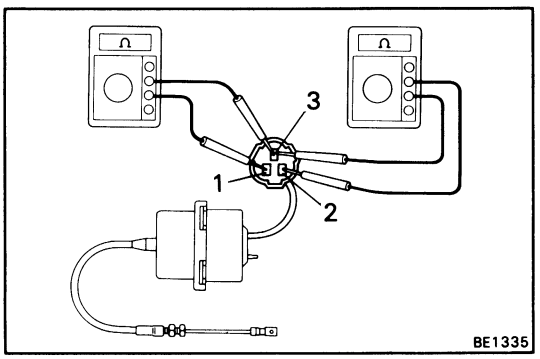

Actuator

INSPECTION OF ACTUATOR

1. INSPECT ACTUATOR RESISTANCE

Measure the resistance value between terminals as follows.

Resistance: 2 – 3 approx. 30 Ω
1 – 3 approx. 68 Ω

If the resistance value is not as specified, replace the actuator.

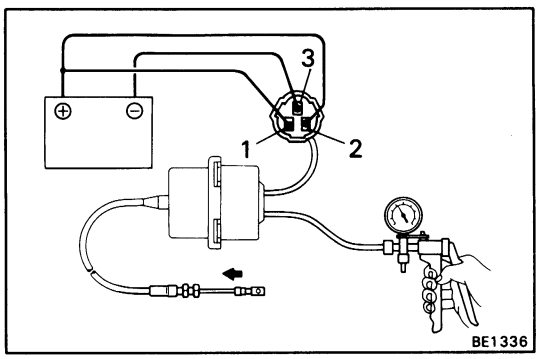

2. INSPECT ACTUATOR OPERATION

(a) Connect the positive (+) lead from the battery to terminals 1 and 2, and the negative (–) lead to terminal 3.

(b) Slowly apply vacuum from 0 – 300 mmHg (0 – 11.81 in.Hg, 0 – 40.0 kPa), and check that the control cable can be pulled smoothly.

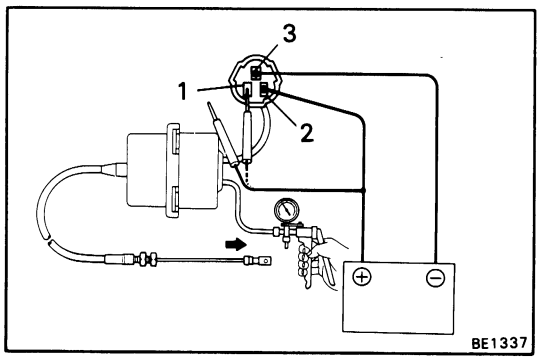

(c) Disconnect terminal 1 or 2 and check that the control cable returns to its original position and the vacuum returns to 0 mmHg (0 in.Hg, 0 kPa).

If operation is not as specified, replace the actuator.

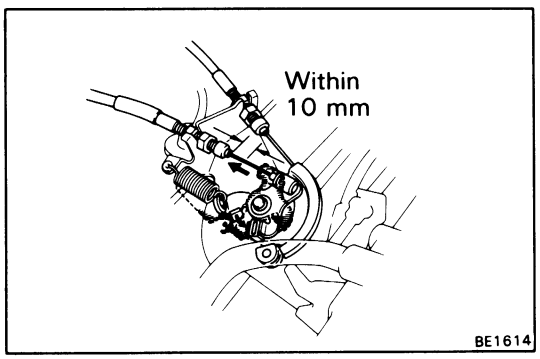

3. INSPECT CONTROL CABLE FREEPLAY

(a) Connect the positive (+) lead from the battery to terminals 1 and 2, and the negative (–) lead to terminal 3.

(b) Slowly apply vacuum from 0 – 300 mmHg (0 – 11.81 in.Hg, 0 – 40.0 kPa), and measure the cable stroke to where the throttle valve begins to open.

Standard: Approx. within 10 mm (0.39 in.) with a slight amount of freeplay.

If freeplay is not as specified, adjust the control cable freeplay.

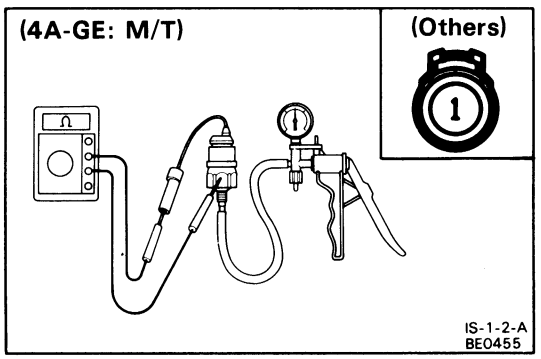

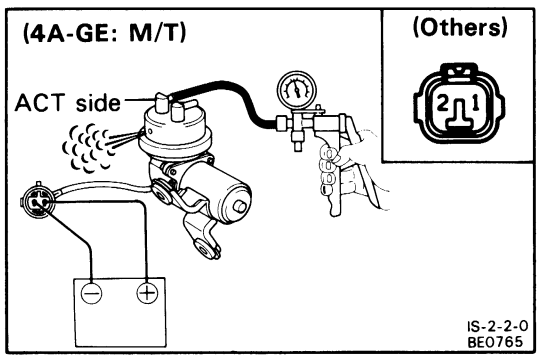

Vacuum Switch

INSPECTION OF SWITCH

INSPECT SWITCH OPERATION

(a) Check that there is no continuity between terminal and body with a vacuum of 170 ± 10 mmHg (6.69 ± 0.39 in.Hg. 22.7 ± 1.3 kPa) or above.

(b) Check that there is continuity between terminal and body with no vacuum.

If operation is not as specified, replace the switch.

Vacuum Pump

INSPECTION OF PUMP

INSPECT VACUUM PUMP OPERATION

(a) Connect a vacuum gauge to the ACT side of the pump.

(b) Connect the positive (+) lead from the battery to terminal 1 and the negative (−) lead to terminal 2.

(c) Check that there is the vacuum of 200 mmHg (7.87 in.Hg, 26.7 kPa) or above.

If operation is not as specified, replace the pump.

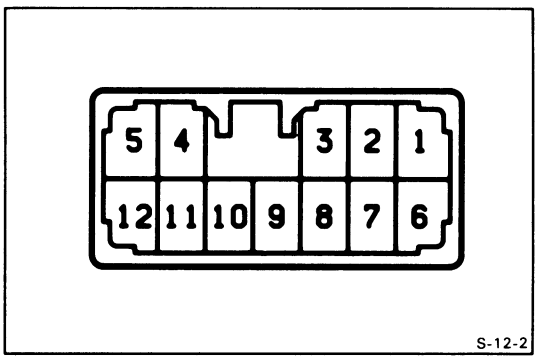

POWER WINDOW

Power Window Master Switch

INSPECTION OF POWER WINDOW MASTER SWITCH

INSPECT SWITCH CONTINUITY

Inspect the switch continuity between terminals.

Operation window		Driver's side				Passenger's side		
Switch position \ Terminal		2	8	9	3	6	1	4
Window unlock	Up	○			○	○	○	○
	OFF					○	○	○
	DOWN			○	○	○	○	○
Window lock	UP	○			○	○		
	OFF					○	○	
	DOWN			○	○		○	
AUTO			○	○	○			

If continuity is not as specified, replace the switch.

Power Window Door Switch

INSPECTION OF POWER WINDOW DOOR SWITCH

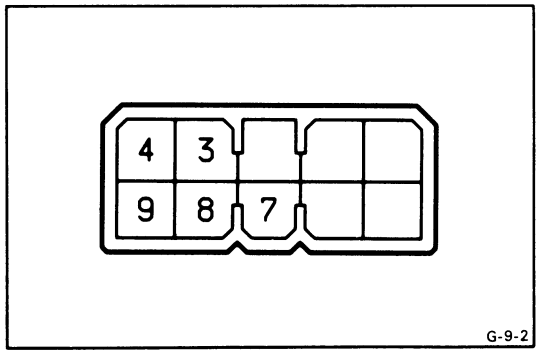

INSPECT SWITCH CONTINUITY

Inspect the switch continuity between terminals.

Switch position \ Terminal	3	4	7	8	9
UP		○	○	○	○
OFF	○	○	○		○
DOWN	○	○		○	○

If continuity is not as specified, replace the switch.

Wire Harness Side

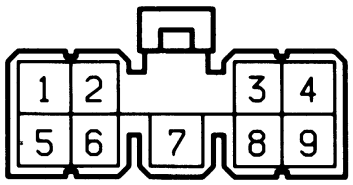

G-9-1

Power Window Relay

ON-VEHICLE INSPECTION OF POWER WINDOW RELAY

INSPECT RELAY CIRCUIT

(a) Disconnect the relay connector and inspect the connector on the wire harness side as shown in the table below.

Check for	Tester connection	Condition	Specified value
Voltage	2 – Body ground	Turn ignition switch on.	Battery voltage
		Turn ignition switch off.	No voltage
Continuity	3 – Body ground	——	Continuity
Voltage	5 – Body ground	Turn master switch to UP.	Battery voltage
		Turn master switch to any position except UP.	No voltage
	8 – Body ground	Turn master auto switch to DOWN.	Battery voltage
		Turn master auto switch to OFF.	No voltage
	9 – Body ground	Turn master switch or master auto switch to DOWN.	Battery voltage
		Turn master switch or master auto switch to any position except DOWN.	No voltage

(b) Connect the positive (+) lead from the battery to terminal 1 and negative (–) lead to terminal 4, check that the window operates to up. Then, reverse the polarity, check that the window operates to down. If does not operate, remove and test the motor.

If circuit operation is correct, replace the motor.

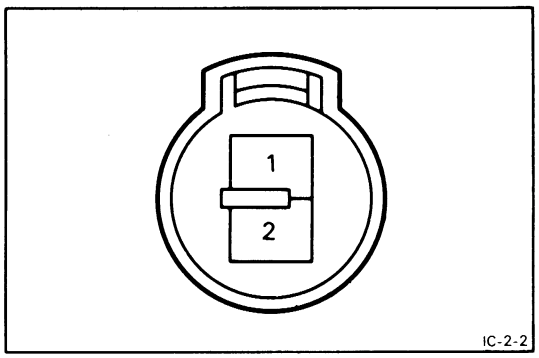

Power Window Motor

INSPECTION OF POWER WINDOW MOTOR

1. INSPECT MOTOR OPERATION

(a) Connect the positive (+) lead from the battery to terminal 1 and negative (−) lead to terminal 2, and check that the motor turns.

(b) Connect the positive (+) lead from the battery to terminal 2 and negative (−) lead to terminal 1, and check that the motor turns the opposite way.

If operation is not as specified, replace the motor.

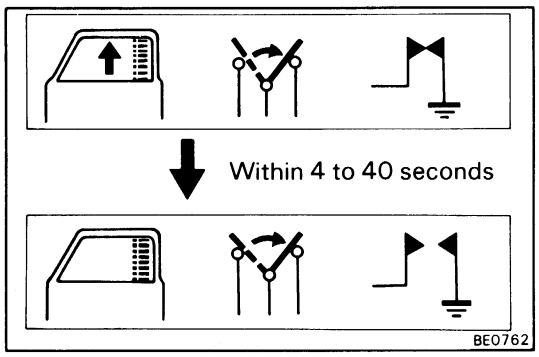

2. INSPECT CIRCUIT BREAKER OPERATION

(a) With the window, fully closed, hold the power window switch on "UP" and check that there is circuit breaker operation noise within 4 to 40 seconds.

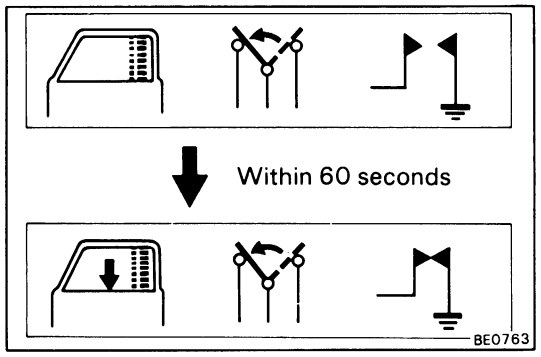

(b) With the window fully closed, hold the switch on "DOWN" and check that the window begins to descend within 60 seconds.

If operation is not as specified, replace the motor.

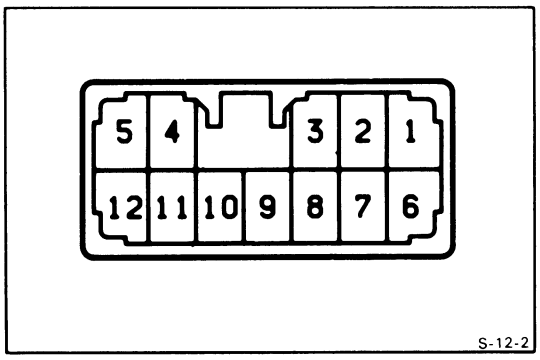

DOOR LOCK CONTROL SYSTEM

Door Lock Switch

INSPECTION OF DOOR LOCK SWITCH

INSPECT SWITCH CONTINUITY

Inspect the switch continuity between terminals.

Driver's side

Switch position \ Terminal	12	5	4
LOCK		○	○
OFF			
UNLOCK	○		○

Passenger's side

Switch position \ Terminal	2	5	6
LOCK	○	○	
OFF			
UNLOCK		○	○

If continuity is not as specified, replace the switch.

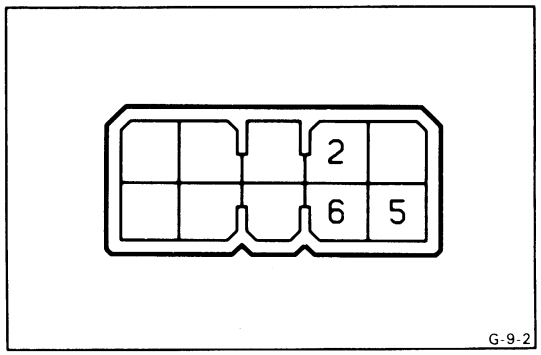

Unlock Warning Switch

(See page BE-11)

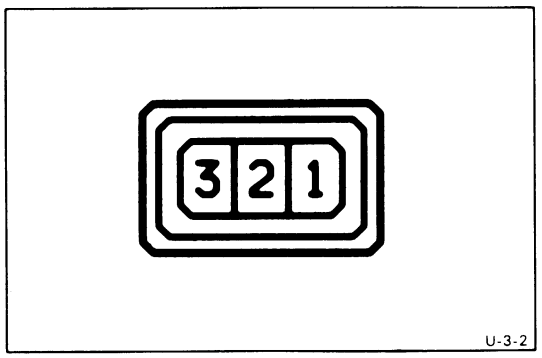

Door Lock Key Switch

INSPECTION OF DOOR LOCK KEY SWITCH

INSPECT SWITCH CONTINUITY

(a) Check that there is continuity between terminals 2 and 3 with the switch free. (Switch to Lock)

(b) Check that there is continuity between terminals 1 and 2 with the switch pin pushed. (Switch to unlock)

If continuity is not as specified, replace the switch.

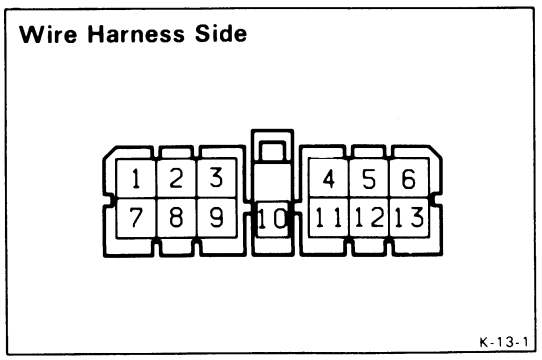

Door Lock Control Relay

INSPECTION OF DOOR LOCK CONTROL RELAY

INSPECT RELAY OPERATION

(a) Disconnect the relay connector and inspect the connector on the wire harness side as shown in the table.

Check for	Tester connection	Condition	Specified value
Continuity	1 – Body ground	LH door opened	Continuity
		LH door closed	No continuity
Voltage	2 – Body ground	———	Battery voltage
Continuity	6 – Body ground	Turn the following switches, one by one to lock ● Control switch LH ● LH door key switch ● RH door key switch ● Control switch RH	Continuity
		Turn the following switches, one by one to except lock ● Control switch LH ● LH door key switch ● RH door key switch ● Control switch RH	No continuity
	7 – Body ground	RH door opened	Continuity
		RH door closed	No continuity
	9 – Body ground	LH door lock switch to unlock	Continuity
		LH door lock switch to lock	No continuity
	10 – Body ground	———	Continuity
	11 – Body ground	RH door lock switch to unlock	Continuity
		RH door lock switch to lock	No continuity
	12 – Body ground	Set the ignition key switch	Continuity
		Remove the ignition key switch	No continuity
	13 – Body ground	Turn the following switches, one by one to unlock ● Control switch LH ● LH door key switch ● RH door key switch ● Control switch RH	Continuity
		Turn the following switch, one by one to any position except unlock ● Control switch ● LH door key switch ● RH door key switch ● Control switch RH	No continuity

(b) Connect the positive (+) lead from the battery to terminal 3 and negative (–) lead to terminal 4, check that the solenoids operate unlock direction. Then, reverse the polarity, check that the solenoids operate lock direction. If any of the solenoids does not operate, remove and test the solenoid.

If circuit operation is correct, replace the relay.

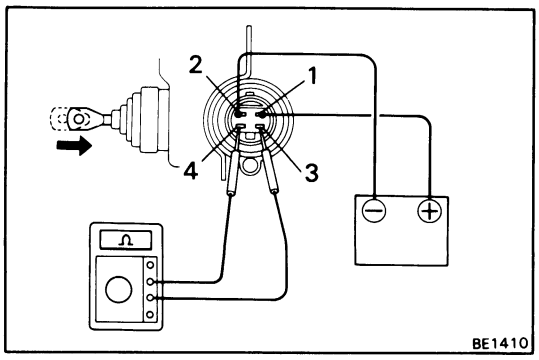

Door Lock Solenoid

INSPECTION OF DOOR LOCK SOLENOID

INSPECT SOLENOID OPERATION

(a) Connect the positive (+) lead from the battery to terminal 1. Connect the negative (–) lead to terminal 2. Check that the solenoid operates in the lock direction.

(b) Check that there is no continuity between terminals 3 and 4.

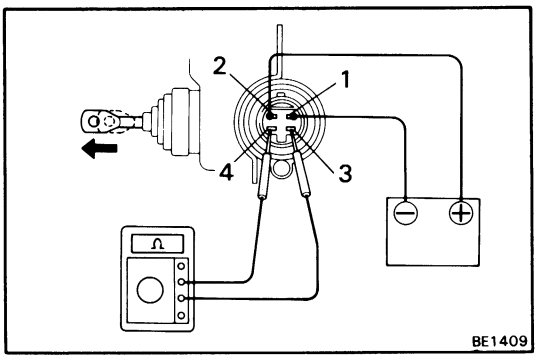

(c) Connect the positive (+) lead from the battery to terminal 2. Connect the negative (−) lead to terminal 1. Check that the solenoid operates in the unlock direction.

(d) Check that there is continuity between terminals 3 and 4.

If operation is not as specified, replace the solenoid.

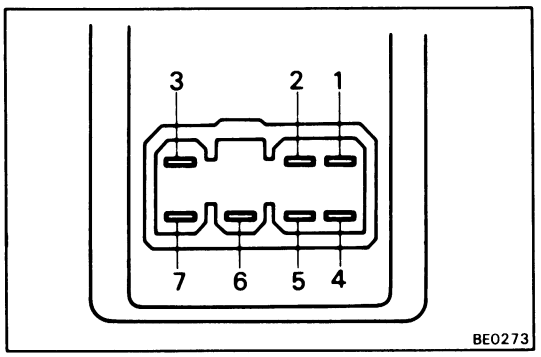

REMOTE CONTROL MIRROR

Mirror Switch

INSPECTION OF MIRROR SWITCH

INSPECT SWITCH CONTINUITY

Inspect the switch continuity between terminals.

Mirror	Left					Right			
Switch position \ Terminal	7	6	1	2	3	2	1	5	4
UP	○		○				○		○
				○	○	○			
DOWN	○			○					○
			○		○	○	○		
LEFT		○	○				○	○	
				○	○	○			
RIGHT		○		○		○		○	
			○		○		○		

If continuity is not as specified, replace the switch.

Remote Control Mirror

ON-VEHICLE INSPECTION OF MIRROR

INSPECT LEFT AND RIGHT MIRROR OPERATION

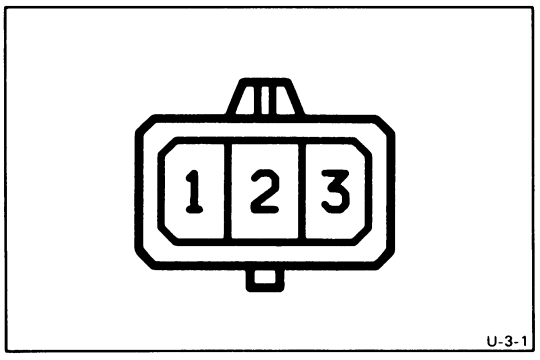

(a) Connect the positive (+) lead from the battery to terminal 1 and the negative (−) lead to terminal 2. Check the mirror moves upward.

(b) Connect the leads in reverse. Check that the mirror moves to downward.

(c) Connect the positive (+) lead from the battery to terminal 3 and the negative (−) lead to terminal 2. Check that the mirror moves to the left.

(d) Connect the leads in reverse. Check that the mirror moves to the right.

If operation is not as specified, replace the mirror.

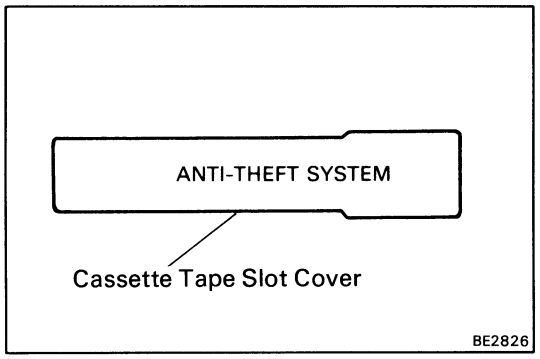

AUDIO SYSTEM

System Description

Anti-Theft System (USA only)

The anti-theft system is only provided for audio systems equipped with an Acoustic Flavor function.

NOTE: The words "ANTI-THEFT SYSTEM" are displayed on the cassette tape slot cover.

For operation instructions for the anti-theft system, please consult the audio system section in the Owner's Manual (hereafter called O/M).

1. SETTING SYSTEM

The system is in operation once the customer has pushed the required buttons and entered the customer-selected 3-digit ID number.
(Refer to the O/M section, "SETTING THE ANTI-THEFT SYSTEM").

NOTE:
- When the audio system is shipped the ID number has not been input, so the anti-theft system is not in operation.
- If the ID number has not been input, the audio system remains the same as a normal audio system.

2. ANTI-THEFT SYSTEM OPERATION

If the normal electrical power source (connector or battery terminal) is cut off, the audio system becomes inoperable, even if the power supply resumes.

3. CANCELLING SYSTEM

The ID number chosen by the customer is input to cancel the anti-theft system.
(Refer to the O/M section, "IF THE SYSTEM IS ACTIVATED")

NOTE: To change or cancel the ID number, please refer to the O/M section, "CANCELLING THE SYSTEM".

Troubleshooting

NOTE: For audio systems with anti-theft system, troubleshooting items marked (*) indicate that "Troubleshooting for ANTI-THEFT SYSTEM" should be carried out first.

No.	Problem		
1.	DEAD RADIO AND TAPE PLAYER	*(a)	No power to radio or tape player, or power but no sound.
		(b)	Tape player okay but no sound from either the AM or FM band.
		(c)	No sound from one speaker.
2.	FAINT RECEPTION	—	———
3.	BAD SOUND QUALITY	(a)	Sound quality bad when radio played.
		(b)	Sound quality bad when tape player played.
4.	DEFECTIVE AUTO-SEARCH MECHANISM	—	———

Troubleshooting for ANTI-THEFT SYSTEM

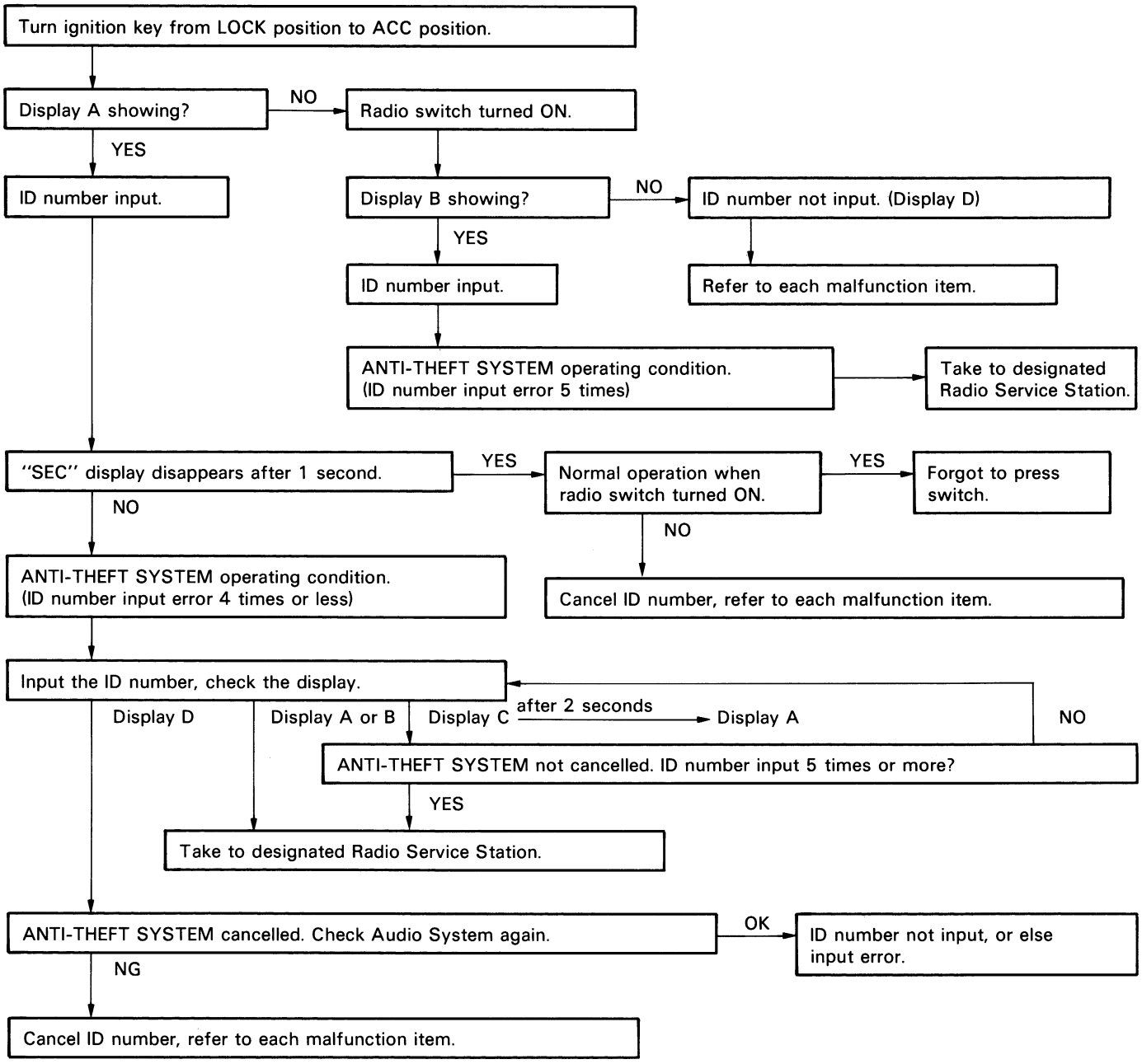

(Liquid Crystal Display (LCD) for Audio System)

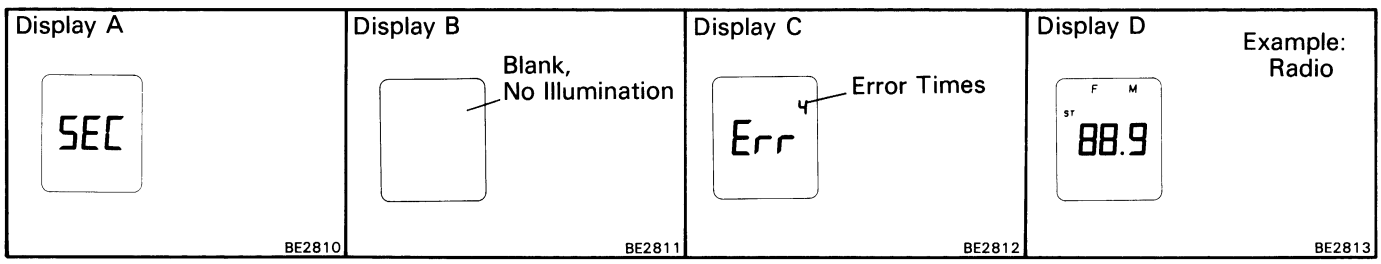

NOTE:

- Refer to O/M for operation details of ANTI-THEFT SYSTEM.
- When the ID number has been cancelled, reset the same number after completing the operation, or inform the customer that it has been cancelled.

DESCRIPTION OF SYMBOLS

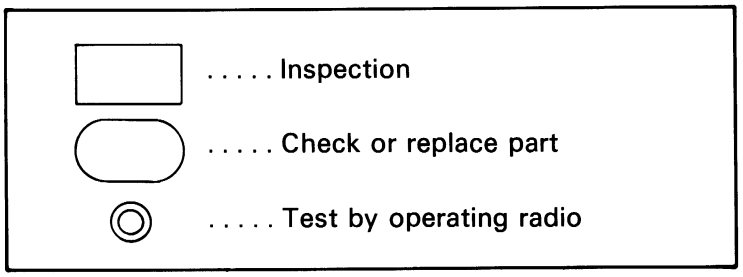

1. DEAD RADIO AND TAPE PLAYER

(a) No power to radio or tape player, or power but no sound.

Possible causes:

- Blown CIG-RADIO fuse
- Short circuit or broken wire in power source wire harness
- Loose connectors behind radio and tape player
- Loose speaker connector
- Defective speaker
- Broken wire in speaker wire harness
- Improperly installed radio or tape player
- Defective radio or tape player

TEST 1

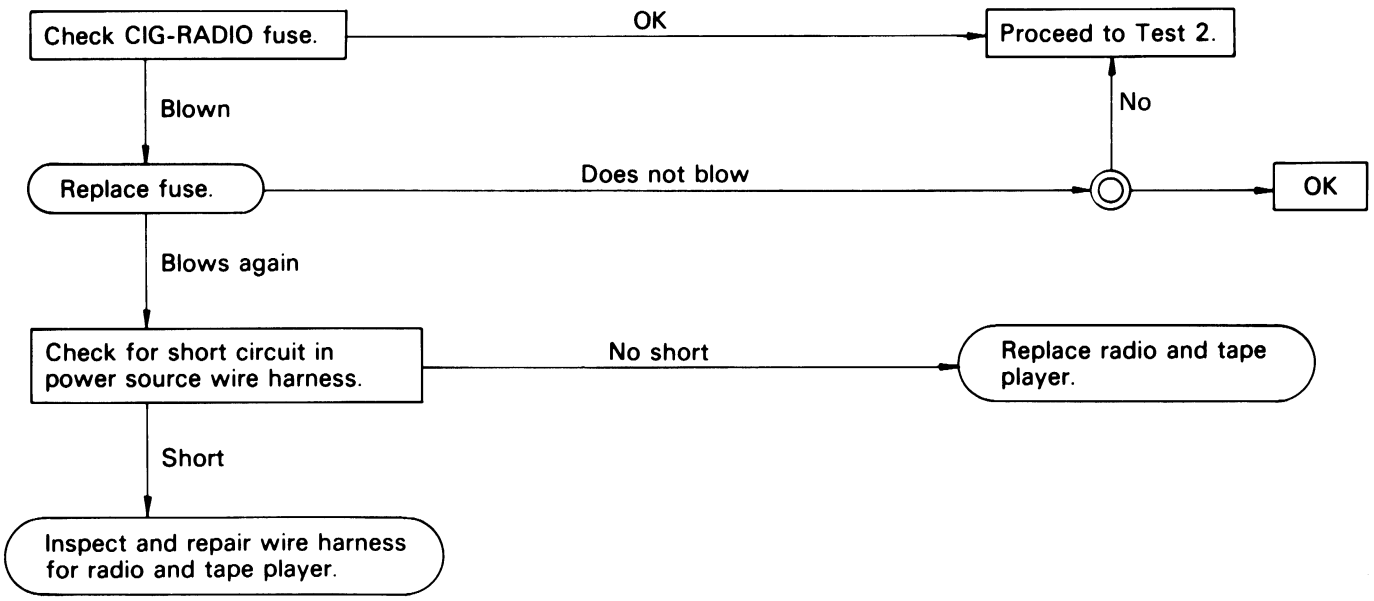

TEST 2

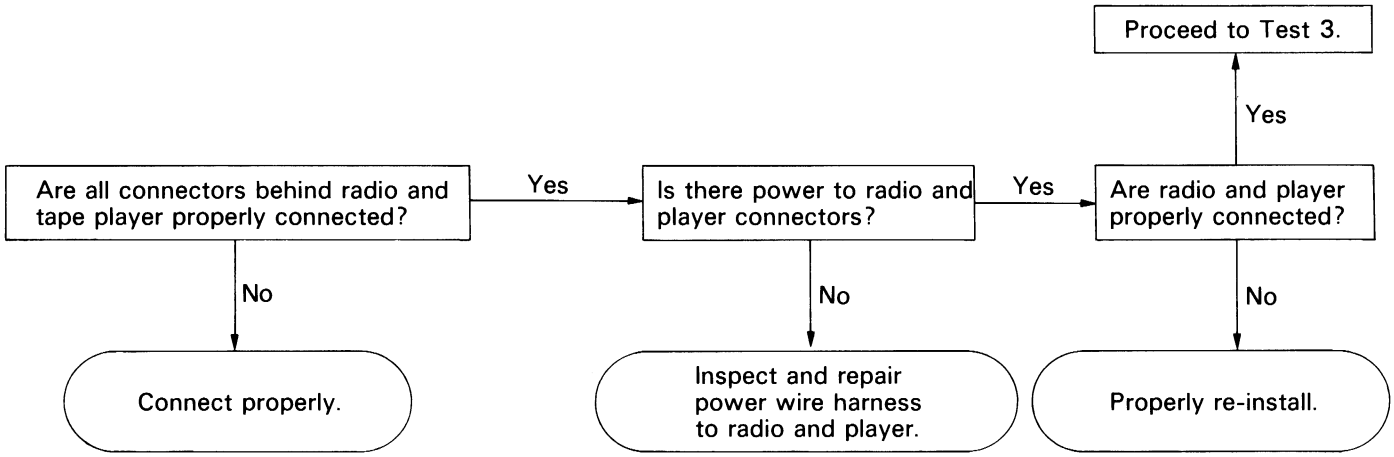

TEST 3

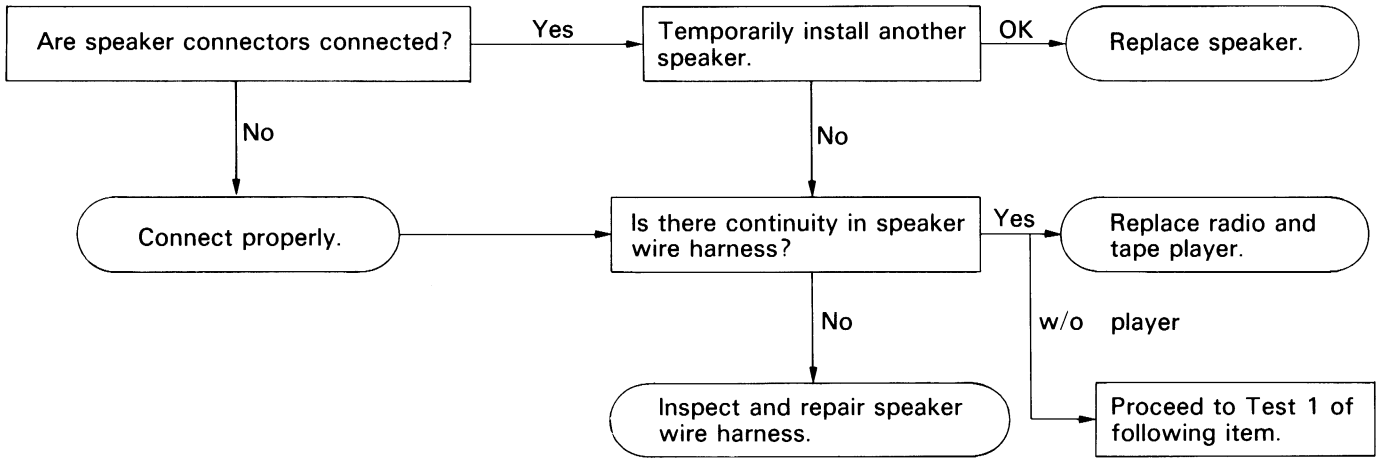

(b) Tape player okay but no sound from either the AM or FM band.

Possible causes:

- Antenna disconnected
- Antenna plug not properly connected
- Defective antenna
- Defective antenna cable
- Defective radio or tape player
- Blown HAZ-RADIO fuse
- Short circuit or broken wire in wire harness for back-up power source

TEST 1

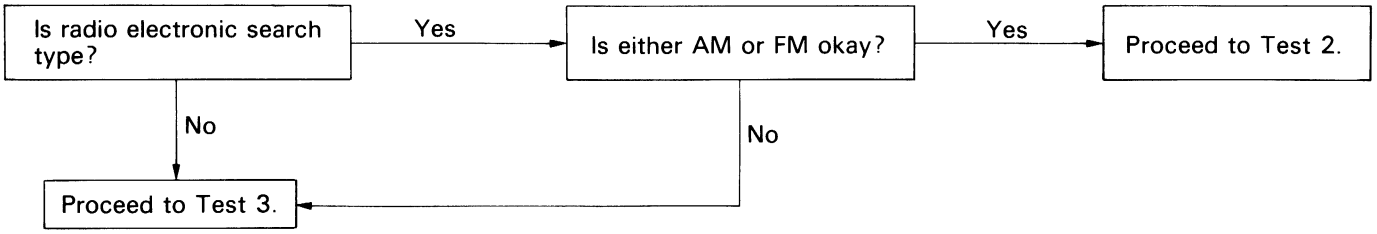

TEST 2

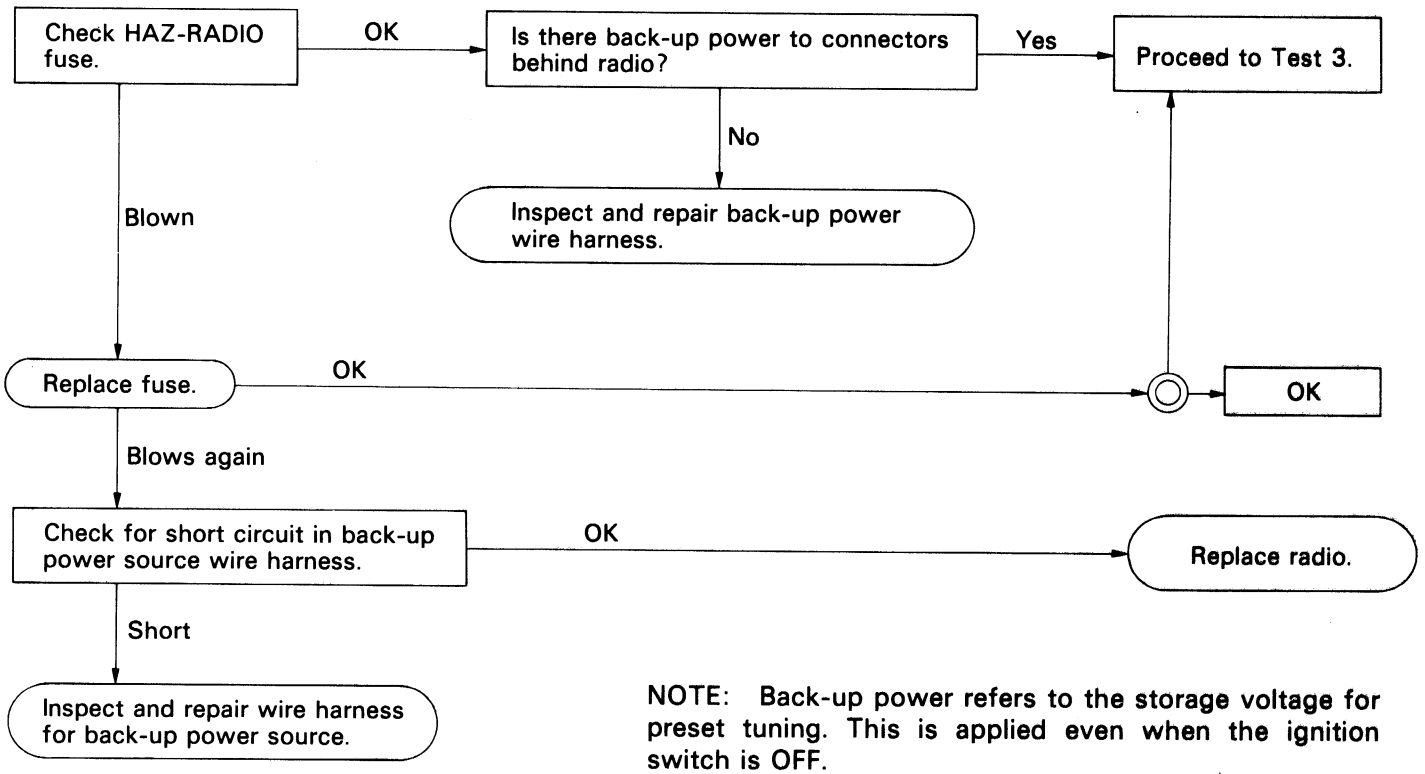

NOTE: Back-up power refers to the storage voltage for preset tuning. This is applied even when the ignition switch is OFF.

TEST 3

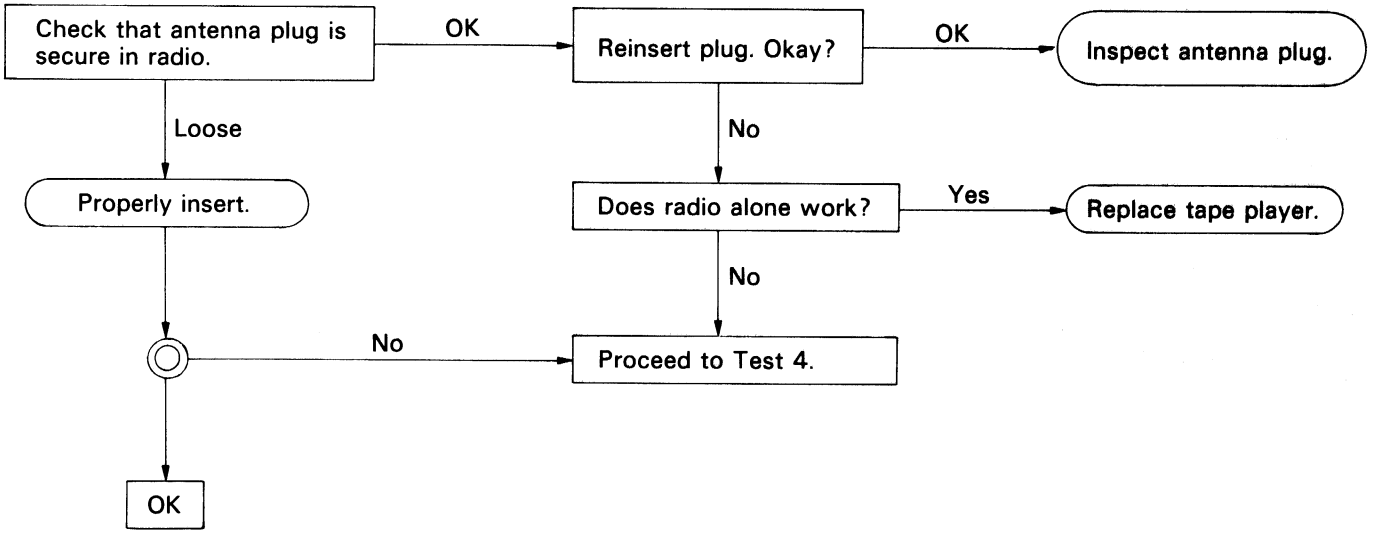

TEST 4

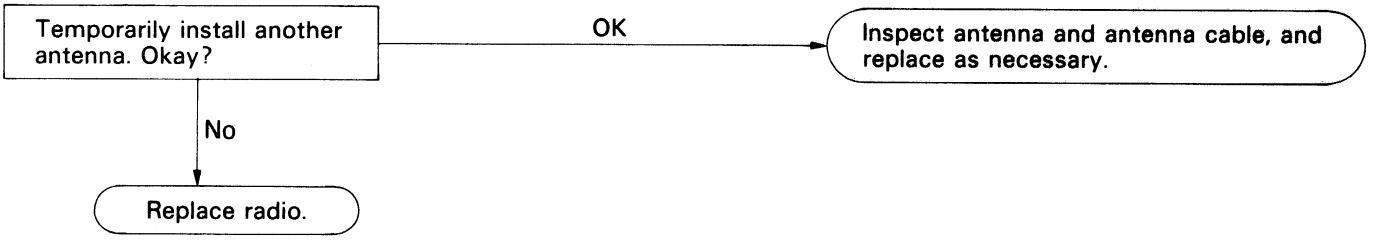

(c) No sound from one speaker.

Possible causes:

- Loose speaker connector
- Broken wire in speaker wire harness
- Defective speaker
- Defective radio and tape player

TEST 1

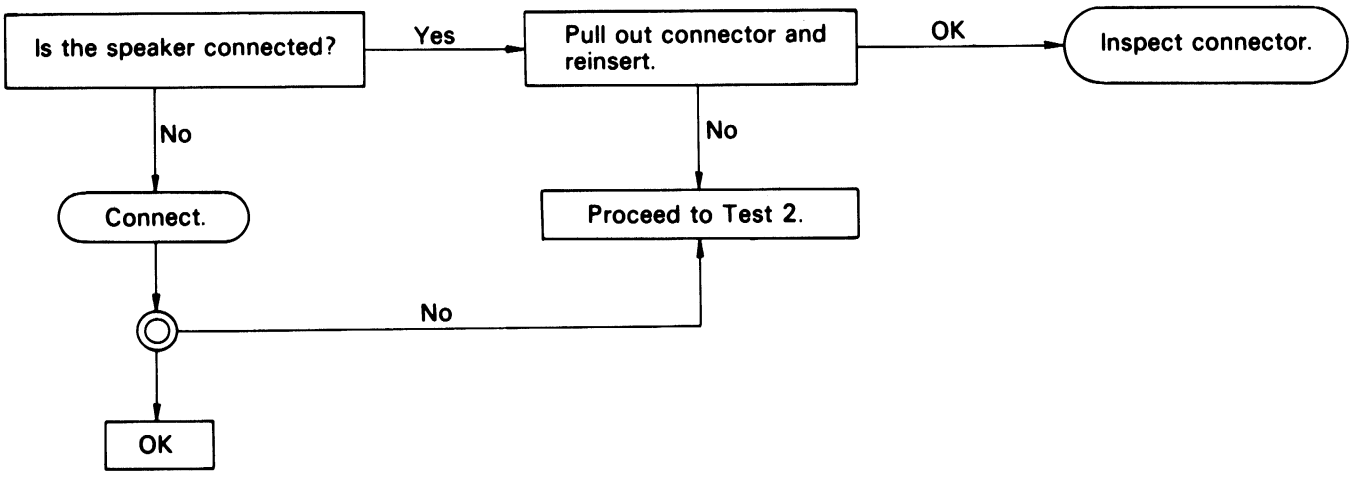

TEST 2

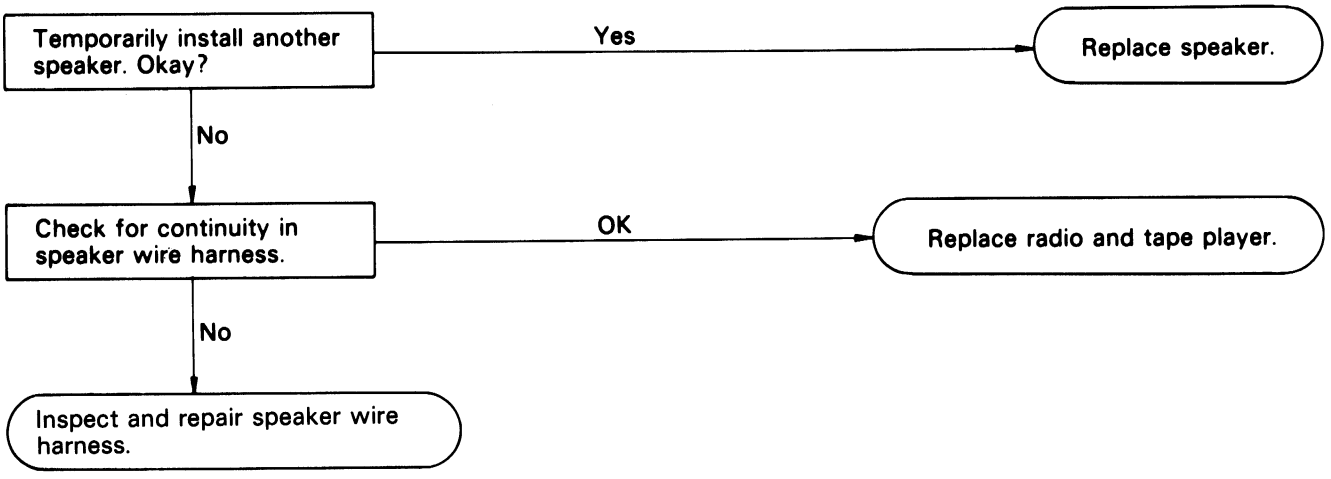

2. FAINT RECEPTION

Possible causes:

- Defective antenna or cable
- Defective speaker
- Defective radio

TEST

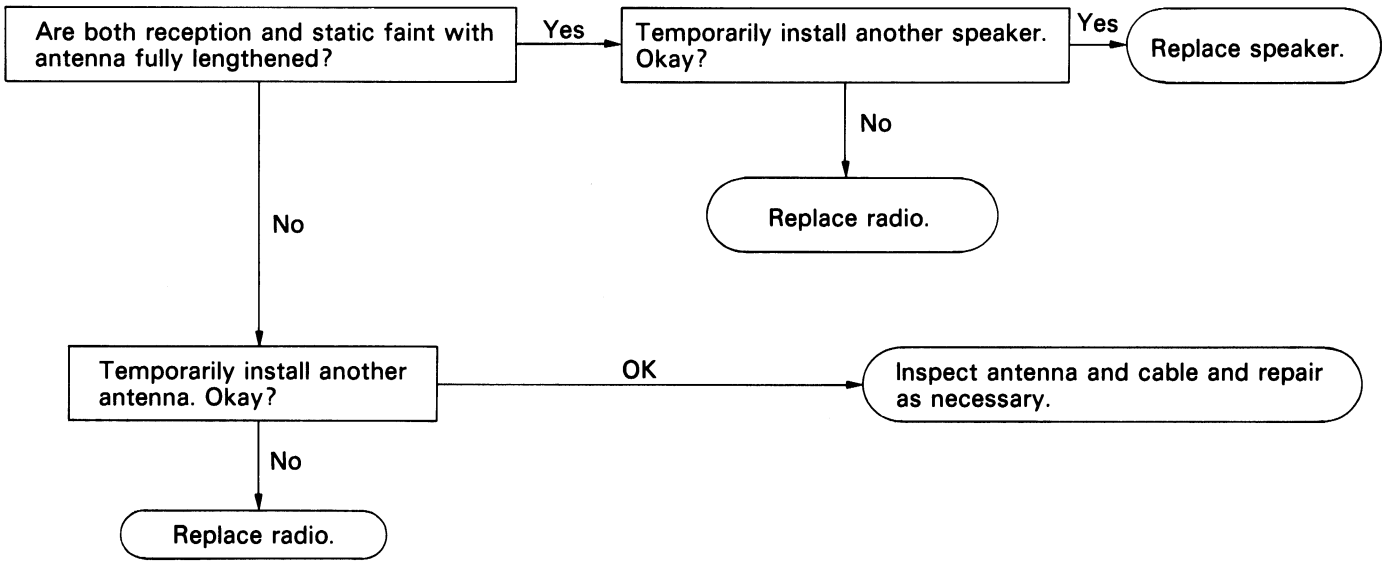

3. BAD SOUND QUALITY

(a) Sound quality bad when radio played.

Possible causes:

- Multipath interference or excessive interception
- Tuner dial not synchronized with station
- Defective antenna
- Defective antenna cable
- Speaker improperly installed
- Vibration sound from components near speaker
- Defective speaker
- Defective radio

TEST 1

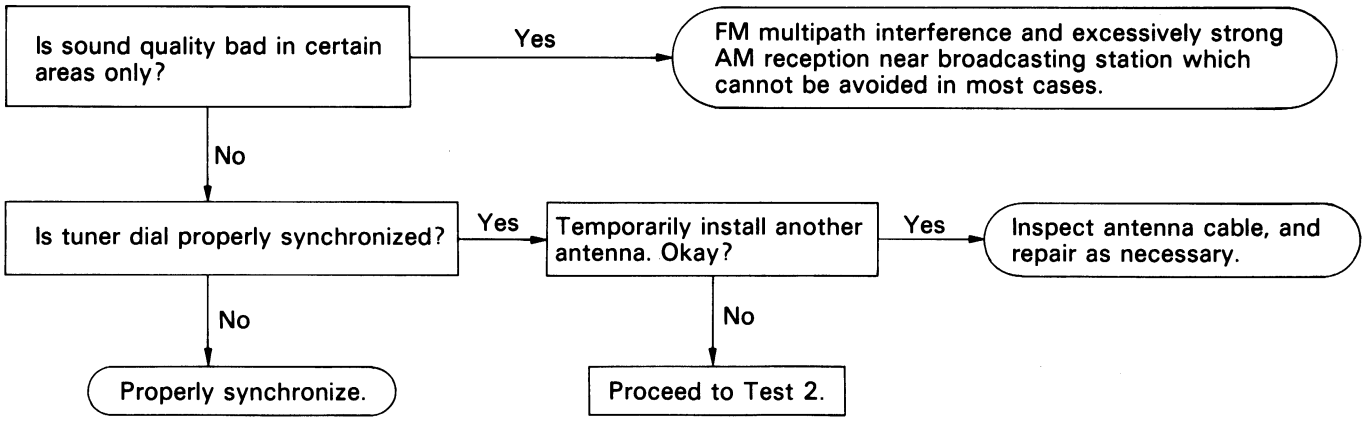

TEST 2

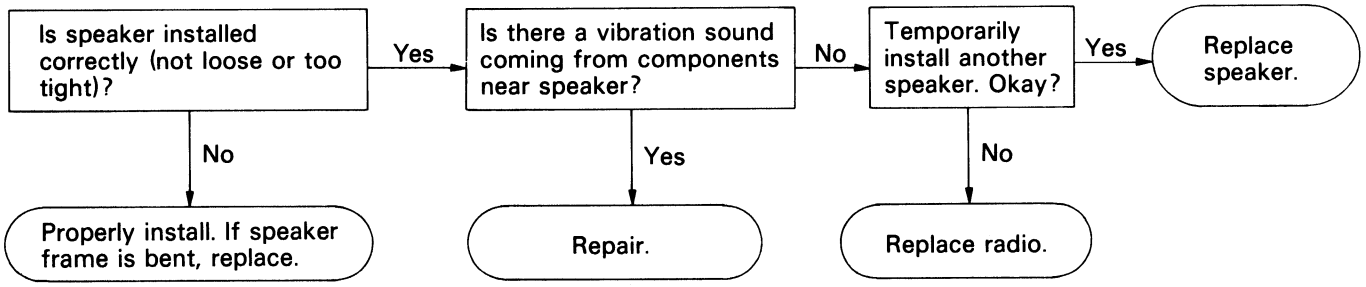

NOTE: FM distortion tends to increase sharply if the tuner not synchronized.

(b) Sound quality bad when tape player played.

Possible causes:

- Bad tape
- Dirty head
- Incorrectly installed speaker
- Vibration noise from around speaker
- Defective speaker
- Defective tape player

TEST 1

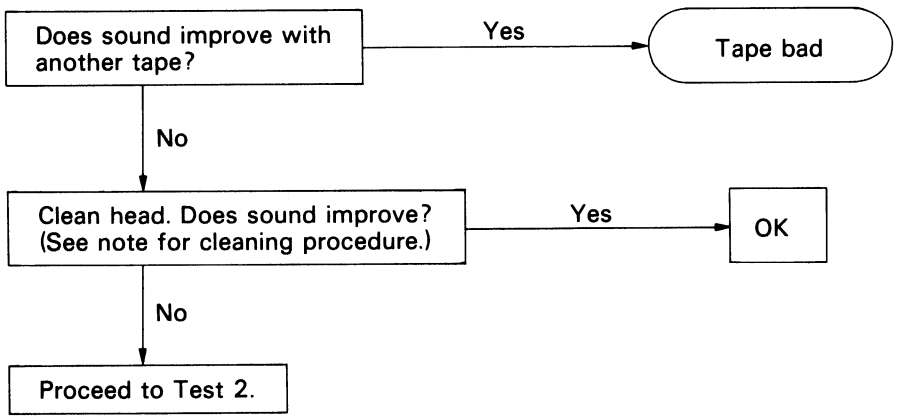

TEST 2

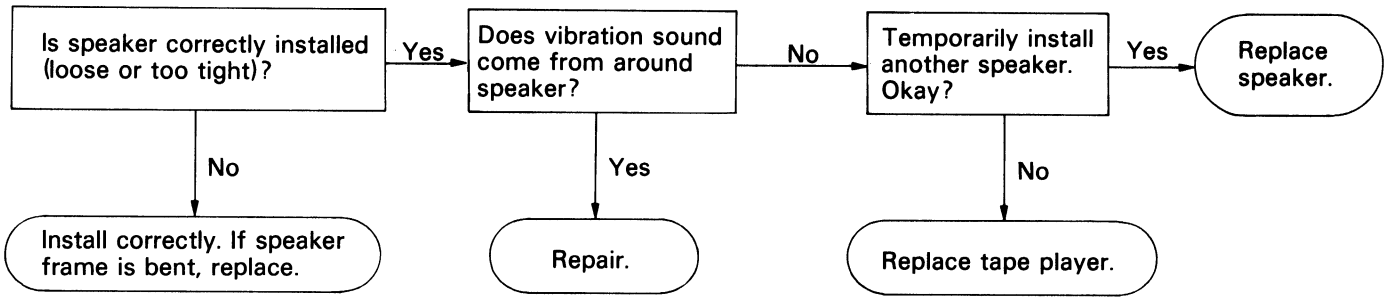

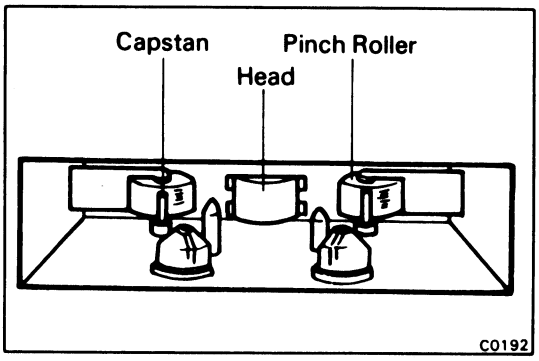

NOTE: Head cleaning procedure.

(1) Raise the cassette door with your finger. Next using a pencil or like object, push in the guide.

(2) Using a cleaning pen or cotton applicator soaked in alcohol, clean the head surface, pinch rollers and capstans.

(3) Push in the "eject" button.

4. DEFECTIVE AUTO-SEARCH MECHANISM

Manual search possible but automatic search mechanism does not function or does not stop at all receivable stations.

Possible causes:

- Poor search sensitivity (DX/LOC button)
- Defective radio

TEST

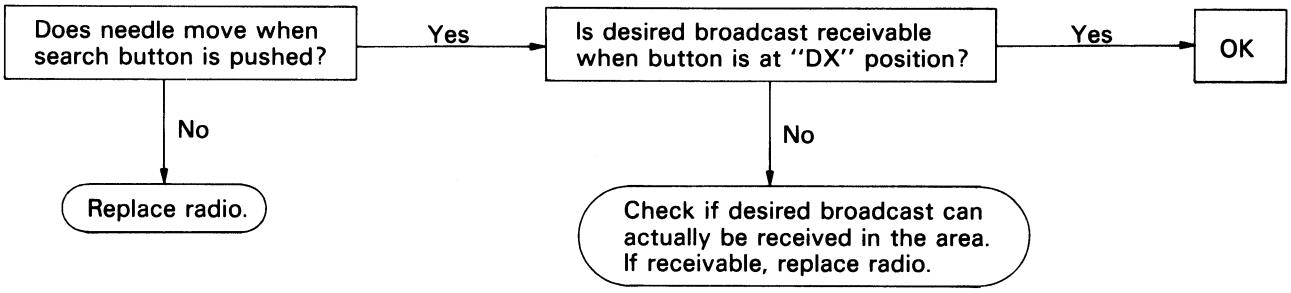

CLOCK

Troubleshooting

CLOCK WILL NOT OPERATE

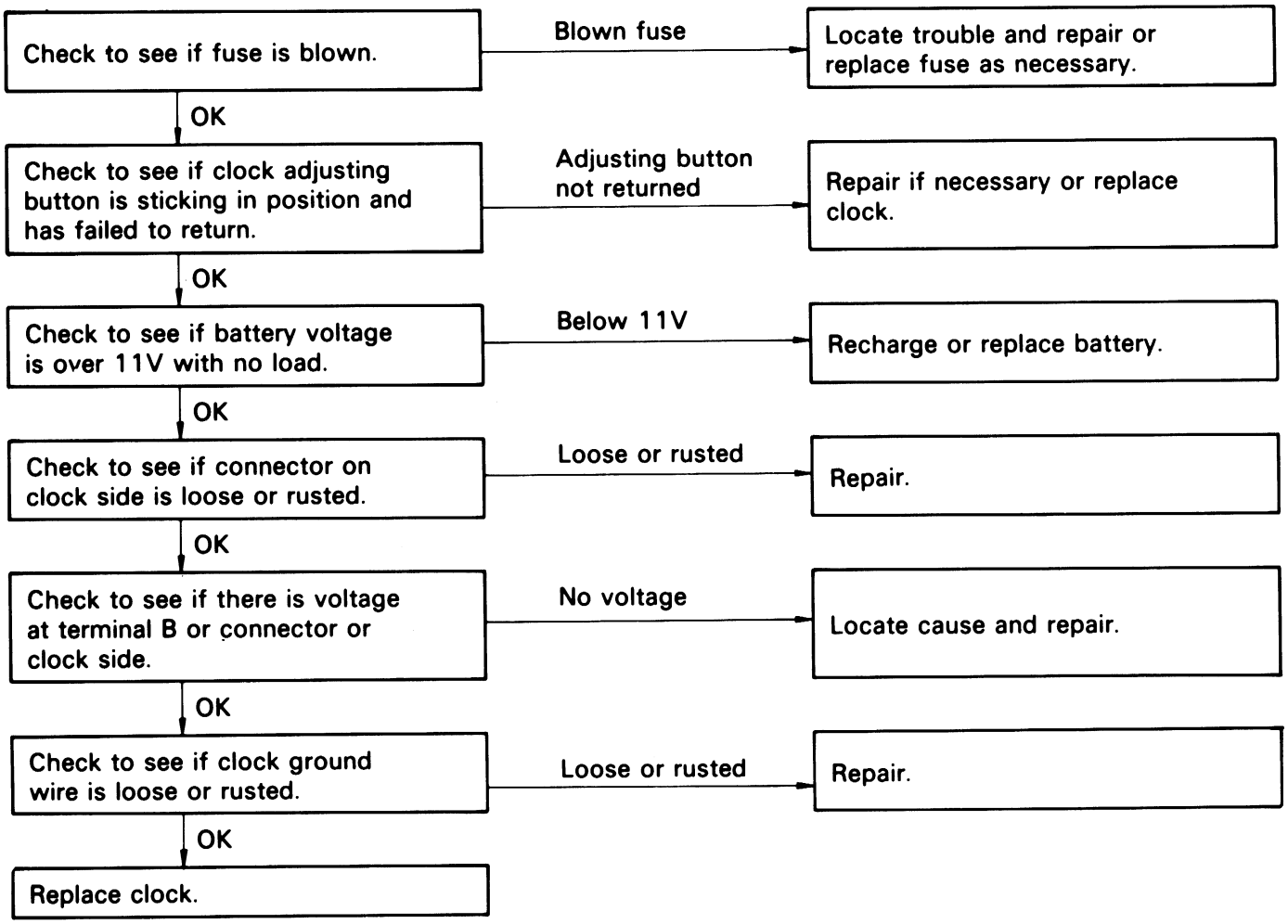

CLOCK LOSES OR GAINS TIME

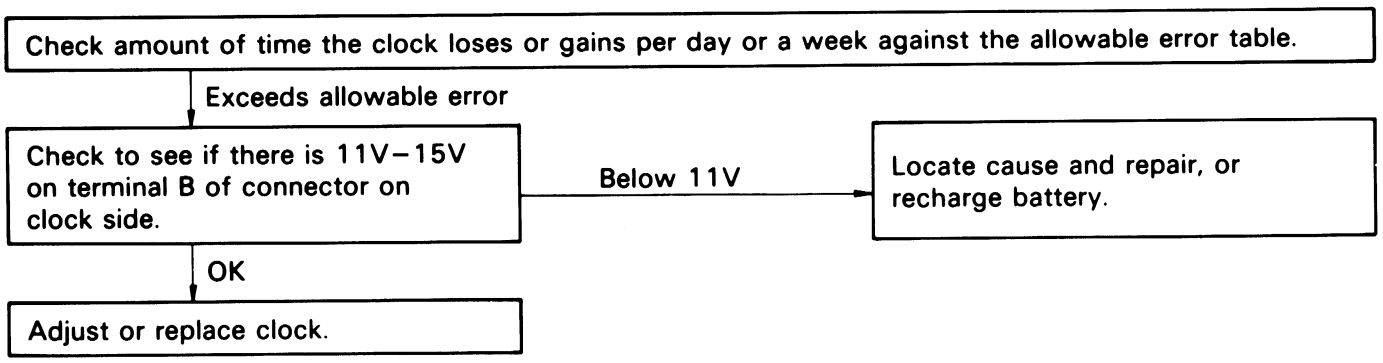

1. INSPECT ALLOWABLE ERROR OF CLOCK

Check the allowable error of the clock.

Allowable error (per day): ± 1.5 seconds

2. ADJUSTMENT OF CLOCK

Adjustment of the quartz clock requires a precise digital counter. Adjustment must be made in a shop specified by the manufacturer.

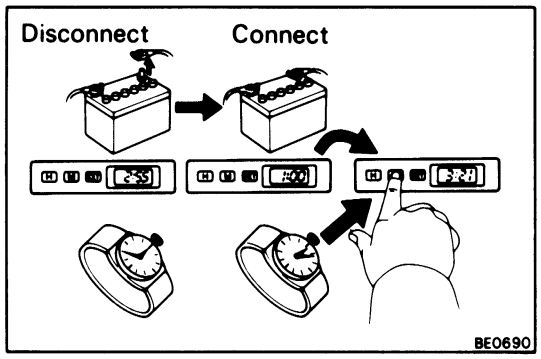

3. SETTING OF CLOCK

(a) Connect the battery terminal.

(b) Check the clock to see that it is running , and then set it to the correct time.

NOTE: Whenever the battery terminal is disconnected, make sure to set the clock to the correct time after reconnecting the battery.

BODY

	Page
GENERAL INFORMATION	BO-2
FRONT HOOD	BO-3
ENGINE HOOD	BO-3
HEADLIGHT	BO-4
FRONT DOOR	BO-5
LUGGAGE COMPARTMENT LID	BO-15
MOULDING	BO-16
WINDSHIELD	BO-31
QUARTER WINDOW GLASS	BO-37
REAR WINDOW GLASS	BO-39
T-BAR ROOF	BO-43
SUN ROOF	BO-50
INSTRUMENT PANEL	BO-54
SEAT	BO-60
SEAT BELT	BO-61
BODY DIMENSIONS	BO-62

GENERAL INFORMATION

If there is a possiblity that the body and/or parts may be damaged, first removed the danger before performing repair operations.

Example:

1. Apply protection tape to the body adjacent to the body part when removing and installing.

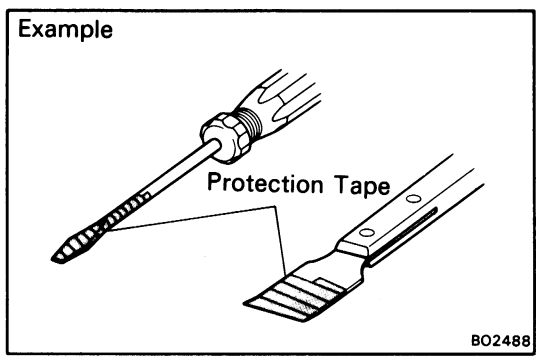

2. When prying off the body parts with a screwdriver or scraper, etc., be sure to apply protection tape to the tip or blade to prevent damage to the paint film or body part.

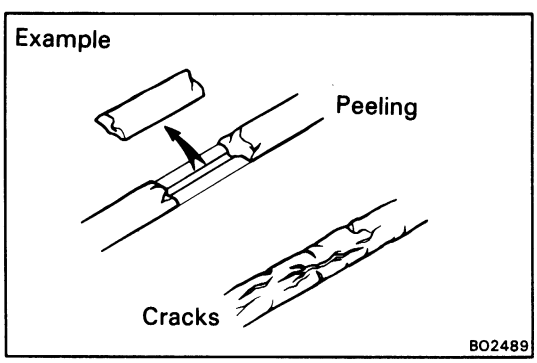

If anti-rust agents are damaged while repairing other parts, be sure to repair the anti-rust agent.

Example:

1. If body sealer, paint film or undercoat are damaged by peeling, cracks, etc., be sure to repair each with on anti-rust agent.

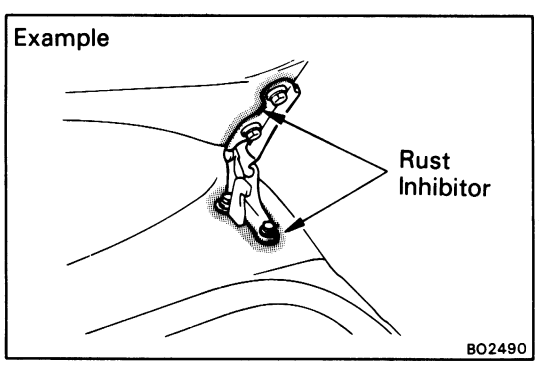

2. If a hinge or exterior body panel is loosened or removed, be sure to apply rust inhibitor after repairs.

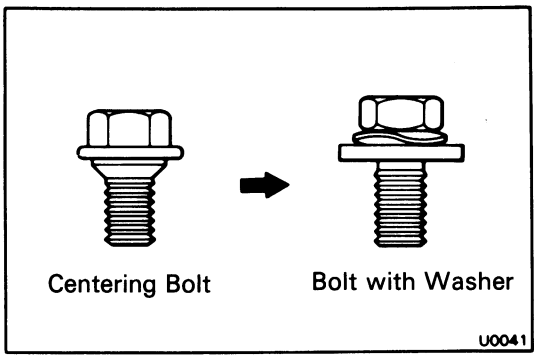

FRONT HOOD

ADJUSTMENT OF FRONT HOOD

NOTE: Since the centering bolt is used as the hood hinge set bolt, the hood cannot be adjusted with it on. Substitute the bolt with washer for the centering bolt.

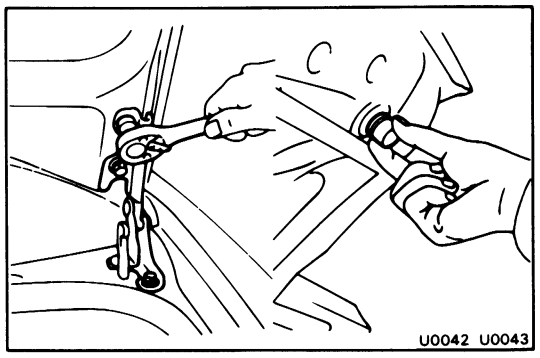

1. **ADJUST HOOD IN FORWARD/REARWARD AND LEFT/RIGHT DIRECTIONS**

   Adjust the hood by loosening the hood side hinge bolts.

2. **ADJUST FRONT EDGE OF HOOD IN VERTICAL DIRECTION**

   Adjust the hood by turning the cushions.

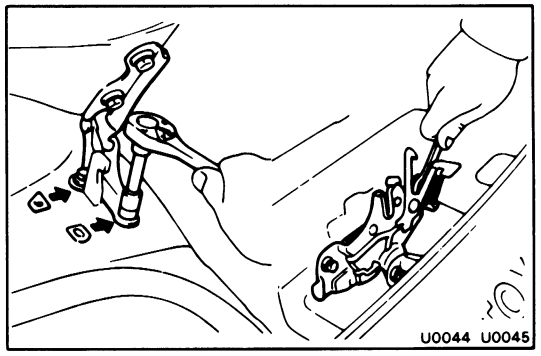

3. **ADJUST REAR EDGE OF HOOD IN VERTICAL DIRECTION**

   Adjust the hood by increasing or decreasing the number of the shims.

4. **ADJUST HOOD LOCK**

   Adjust the hood lock by loosening the mounting bolts.

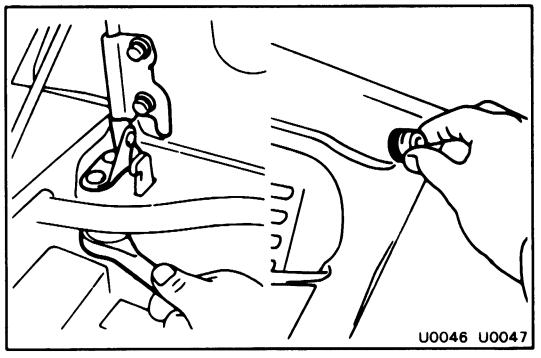

ENGINE HOOD

ADJUSTMENT OF ENGINE HOOD

1. **ADJUST ENGINE HOOD IN FORWARD/REARWARD AND LEFT/RIGHT DIRECTIONS**

   Adjust the hood by loosening the body side hinge bolts.

2. **ADJUST REAR EDGE OF ENGINE HOOD IN VERTICAL DIRECTION**

   Adjust the hood by turning the cushions.

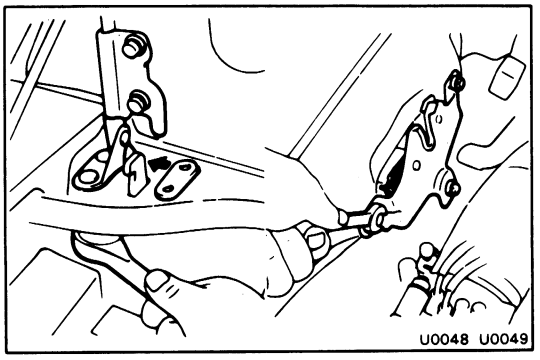

3. **ADJUST FRONT EDGE OF ENGINE HOOD IN VERTICAL DIRECTION**

   Adjust the hood by increasing or decreasing the number of shims.

4. **ADJUST HOOD LOCK**

   Adjust the hood lock by loosening the mounting bolts.

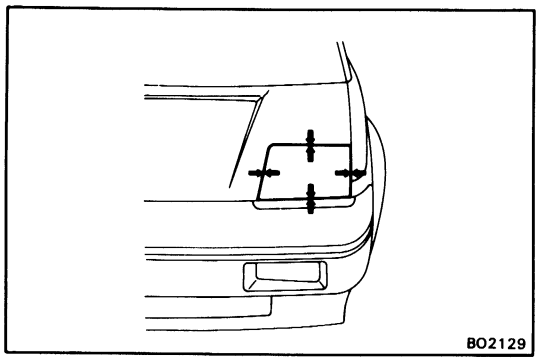

HEADLIGHT

WARNING: When adjusting each section, raise or lower the headlight with the light control switch. But when adjusting each section, be sure to remove the RTR MTR fuse (30A) before adjusting.

ADJUSTMENT OF HEADLIGHT

1. ADJUST HEADLIGHT COVER IN FORWARD/ REARWARD AND LEFT/RIGHT DIRECTIONS

(a) Remove the headlight door.

(b) Adjust the headlight cover by loosening the cover set screws.

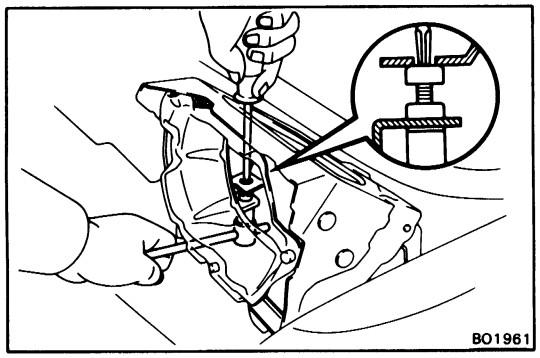

2. ADJUST HEADLIGHT SLANT

(a) Loosen the stopper lock nut.

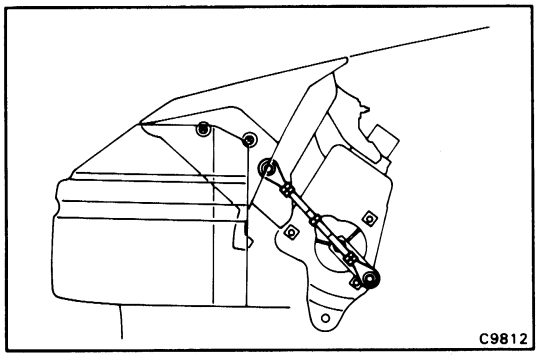

(b) Lower the headlight.

(c) Turn the manual operation knob to align the rod and the motor link.

(d) Change the rod length to adjust the headlight slant.

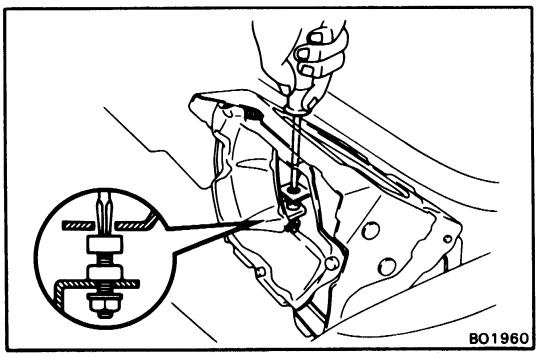

3. ADJUST HEADLIGHT STOPPER POSITION

(a) Raise the headlight.

(b) Turn the stopper counterclockwise until it touches the headlight bracket, then turn it another 2/3 turn counterclockwise.

(c) Tighten the stopper lock nut.

(d) Install the sealed beam.

(e) Install the headlight door.

FRONT DOOR

COMPONENTS

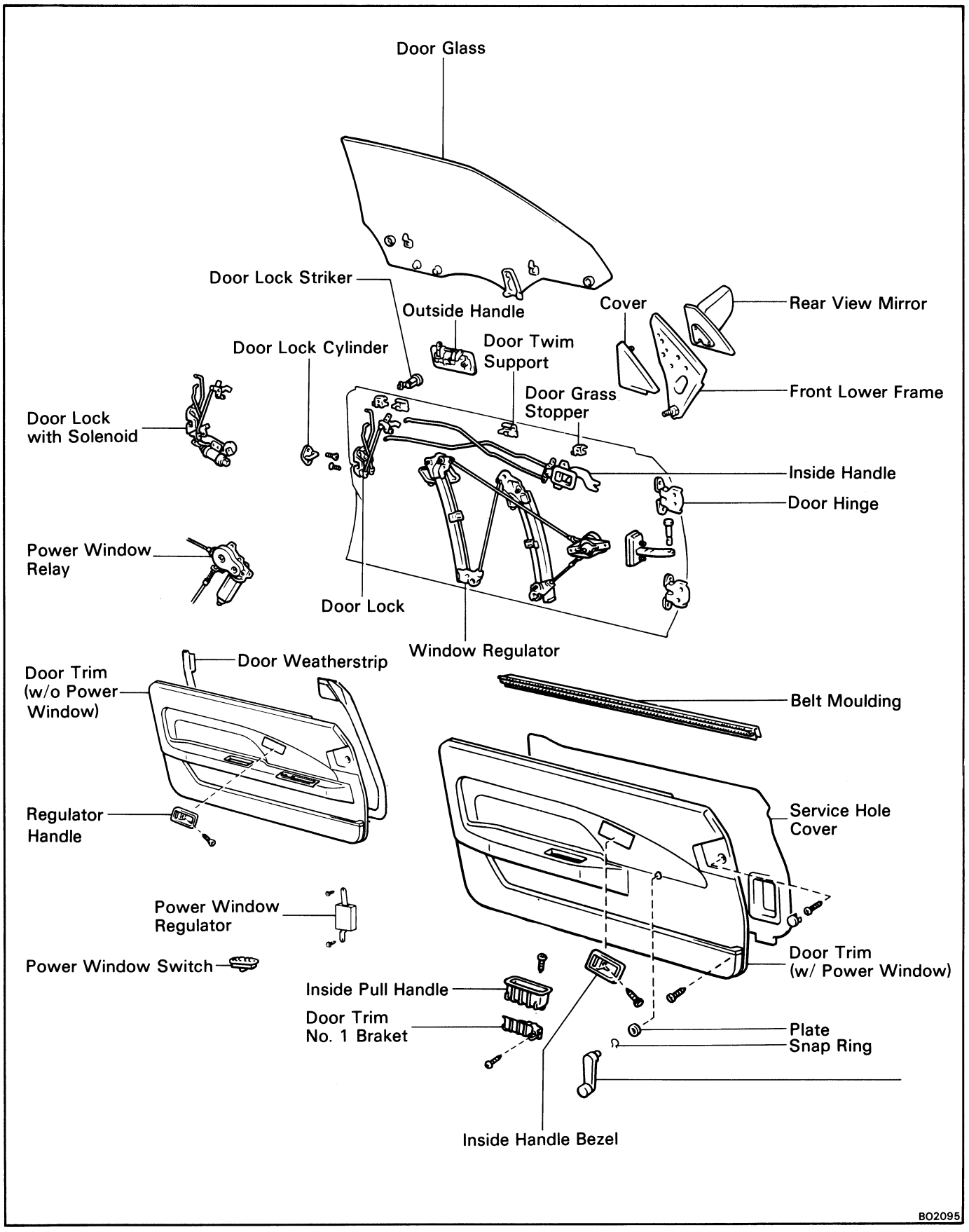

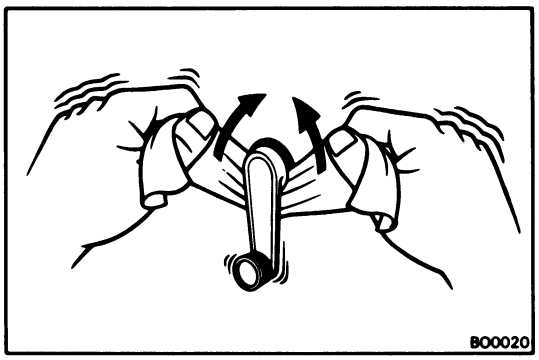

DISASSEMBLY OF FRONT DOOR

1. REMOVE WINDOW REGULATOR HANDLE

Pull off the snap ring with a cloth and remove the regulator handle and plate.

2. REMOVE INSIDE HANDLE BEZEL

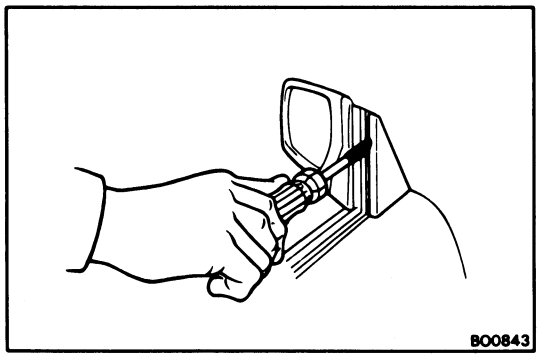

3. REMOVE REAR VIEW MIRROR COVER

Pry loose the retainer and remove the cover.

NOTE: Tape the screwdriver tip before using.

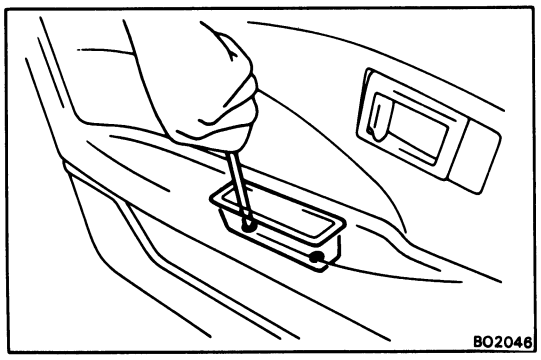

4. REMOVE DOOR TRIM

(a) Remove the two screws and inside pull handle.

(b) Remove the cap and four screws.

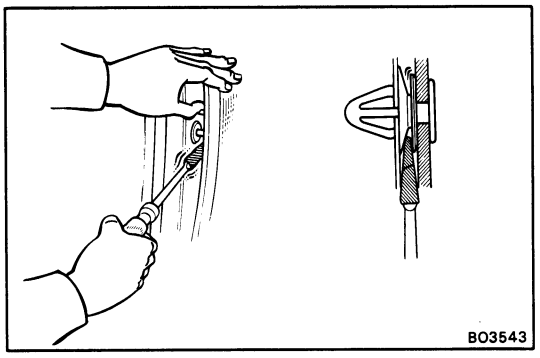

(c) Insert a screwdriver between the retainers and door trim to pry it loose.

NOTE: Tape the screwdriver tip before using.

(d) Disconnect the connector. (w/ Power window)

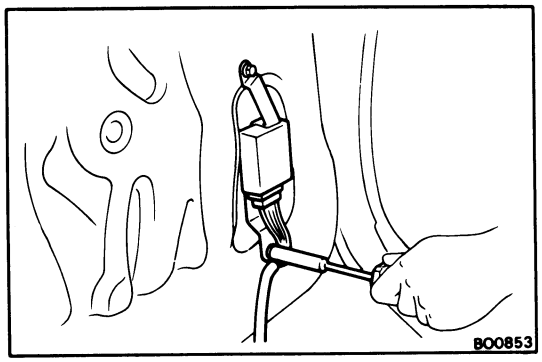

5. REMOVE POWER WINDOW RELAY (w/ POWER WINDOW)

(a) Remove the two screws.

(b) Disconnect the connector from the relay.

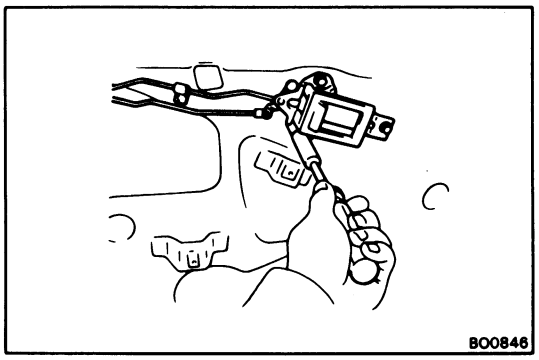

6. REMOVE INSIDE HANDLE

(a) Remove the three screws.

(b) Disconnect the inside handle links from the door lock.

7. REMOVE DOOR TRIM NO. 1 BRAKET

8. REMOVE SERVICE HOLE COVER

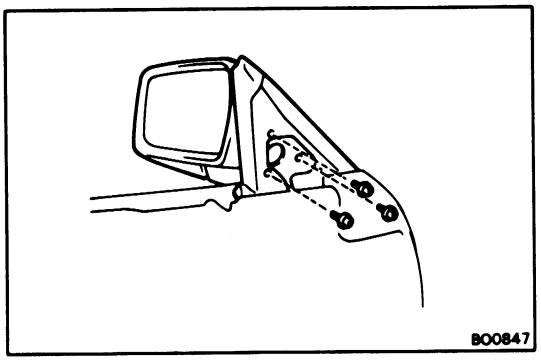

9. REMOVE REAR VIEW MIRROR

(a) Disconnect the connector. (w/ Remote control mirror)

(b) Remove the three screws and rear view mirror.

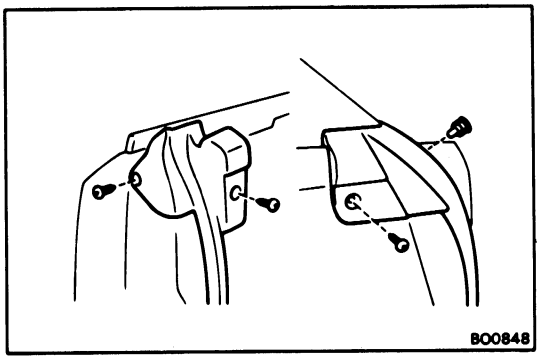

10. REMOVE DOOR WEATHERSTRIP

11. REMOVE BELT MOULDING
(See page BO-20)

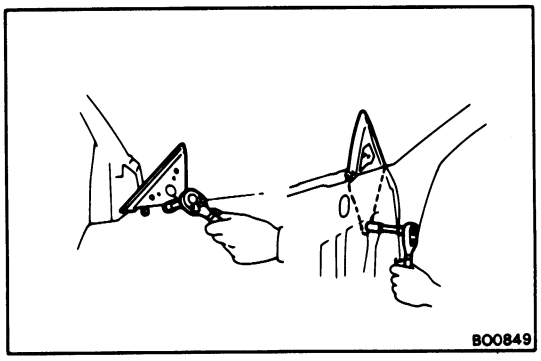

12. REMOVE FRONT LOWER FRAME

Remove the nut and two bolts.

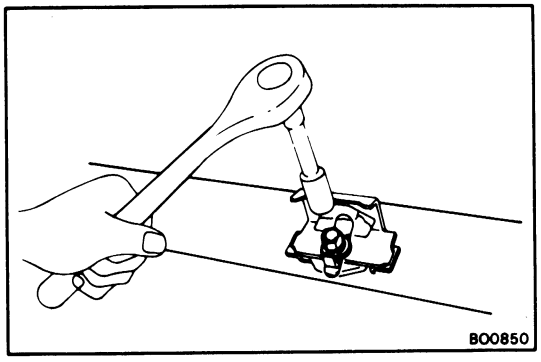

13. REMOVE TWO DOOR TRIM SUPPORTS

14. REMOVE TWO DOOR GLASS STOPPERS

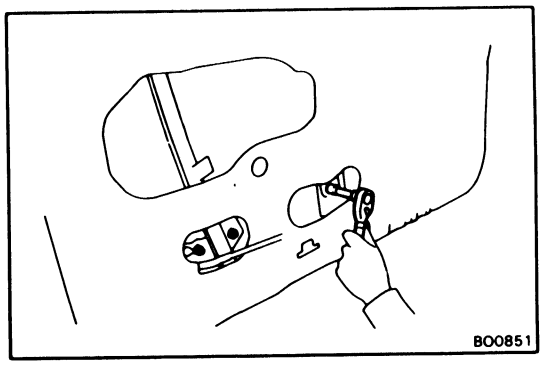

15. REMOVE DOOR GLASS

(a) Remove the two nuts and bolt while holding the door glass.

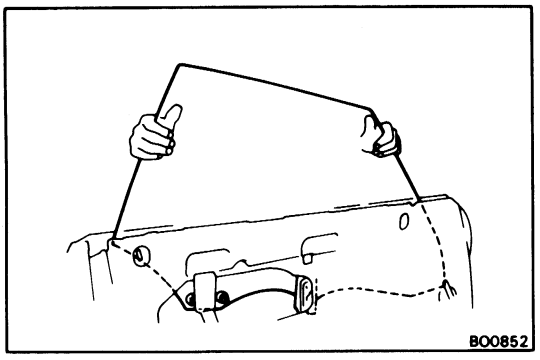

(b) Remove the door glass by pulling it upward.

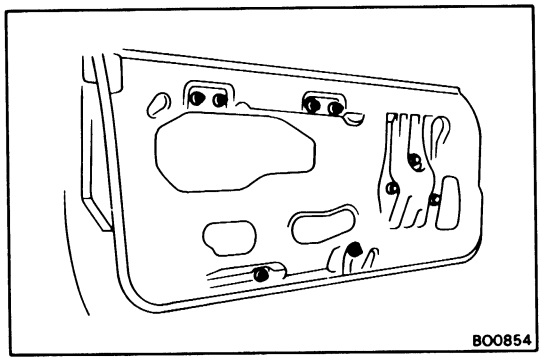

16. REMOVE WINDOW REGULATOR

(a) Disconnect the motor connector. (w/ Power window)

(b) Disconnect the regulator wire from the two clamps.

(c) Remove the six nuts and three bolts.

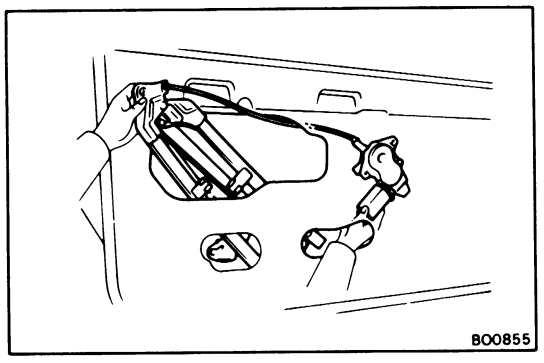

(d) Remove the regulator through the service hole.

CAUTION: Be careful not to twist or damage the regulator wire.

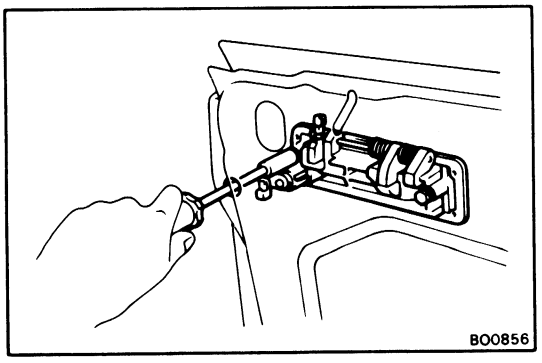

17. REMOVE OUTSIDE HANDLE WITH DOOR LOCK CYLINDER

(a) Disconnect the links from the outside handle and door lock cylinder.

(b) Remove the two bolts and outside handle with the door lock cylinder.

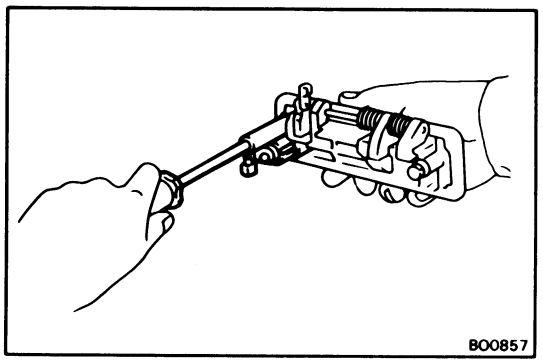

18. REMOVE DOOR LOCK CYLINDER

Remove the bolt and door lock cylinder from the outside handle.

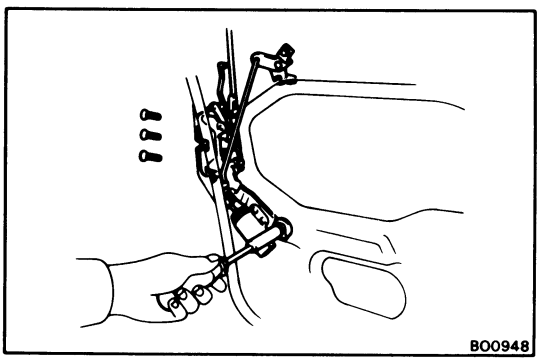

19. REMOVE DOOR LOCK

(a) Disconnect the connectors from the door lock solenoid and door lock key switch. (w/ Power door lock)

(b) Remove the two bolts and three screws. (w/ Power door lock)

(c) Remove the bolt and three screws. (w/o Power door lock)

(d) Pull out the door lock with door lock solenoid. (w/ Power door lock)

(e) Pull out the door lock. (w/o Power door lock)

INSPECTION OF WINDOW REGULATOR

INSPECT WINDOW REGULATOR

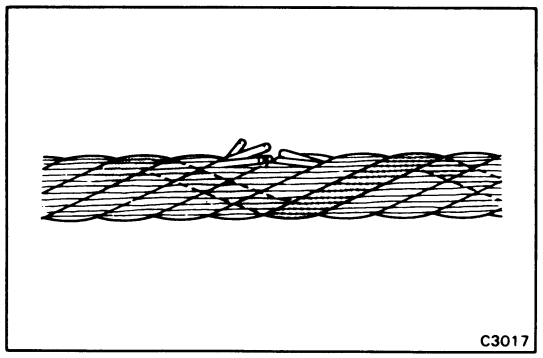

(a) Check the regulator wire for wear or damage.

(b) Check the pulley or drum for wear or damage.

(c) Check the wire end-clip for damage.

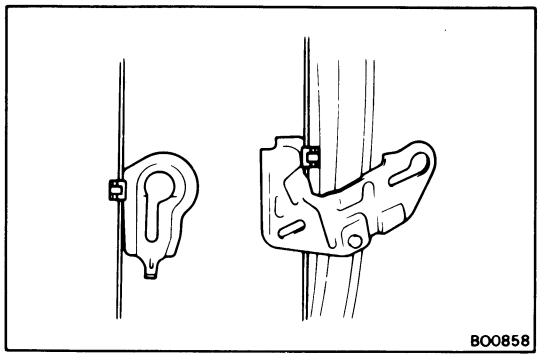

(d) Check the bracket hook for wear or damage.

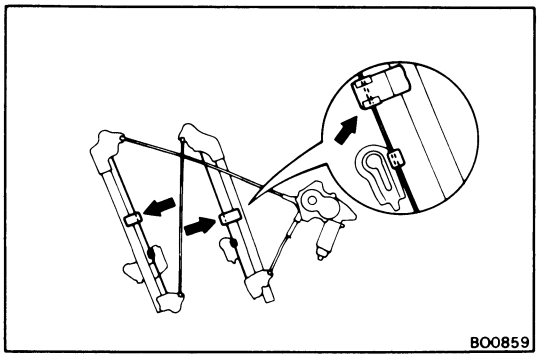

(e) Check that the wire is in the correct position as in the illustration.

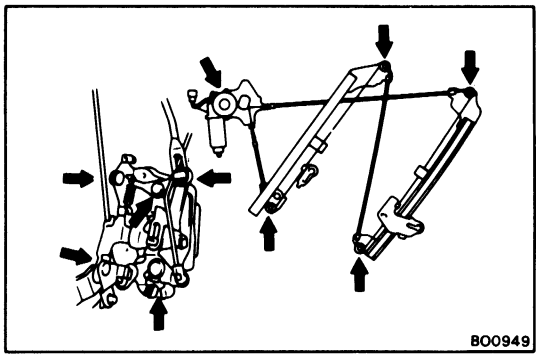

ASSEMBLY OF FRONT DOOR

(See page BO-5)

1. BEFORE INSTALLING PARTS, APPLY MP GREASE TO THEM

(a) Apply MP grease to the sliding surface of the window regulator.

(b) Apply MP grease to the sliding surface of the door lock.

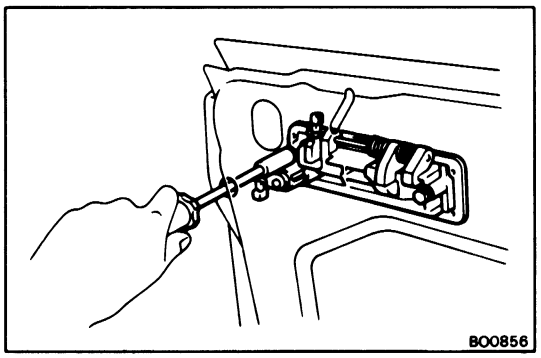

2. INSTALL OUTSIDE HANDLE

(a) Install the door lock cylinder to the outside handle.

(b) Install the outside handle with the two bolts.

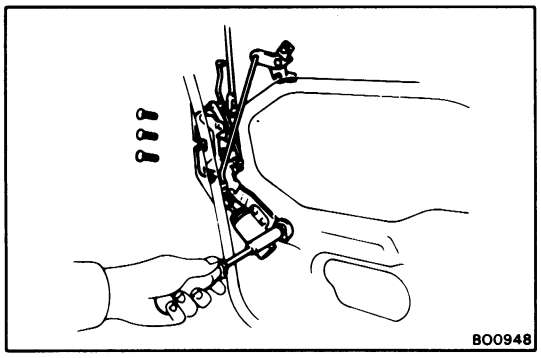

3. INSTALL DOOR LOCK

(a) Install the door lock with the three screws and two bolts. (w/ Power door lock)

(b) Install the door lock with the bolt and three screws. (w/o Power door lock)

(c) Connect the connectors to the door lock solenoid and door lock key switch. (w/ Power door lock)

(d) Connect the links to the outside handle and door lock cylinder.

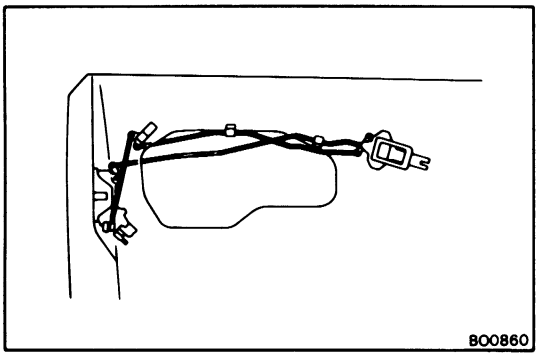

4. INSTALL INSIDE HANDLE

(a) Install the inside handle with the three screws.

(b) Connect the links to the door lock.

5. CHECK DOOR LOCK OPERATION

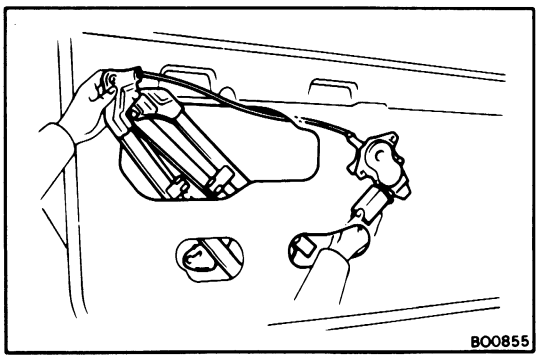

6. INSTALL WINDOW REGULATOR

(a) Place the window regulator through the service hole.

(b) Install the six nuts and three bolts.

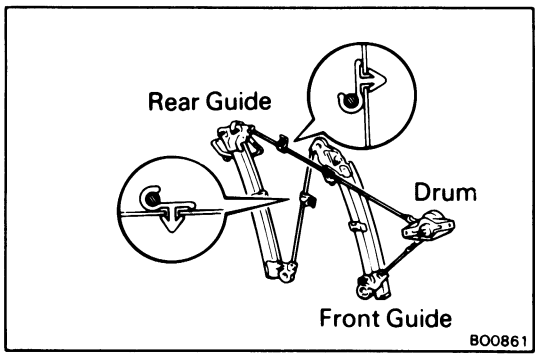

CAUTION: Stretch the wire between the drum and rear guide top edge through the front guide and door inside panel.

(c) Clamp the wire to the two clamps.

(d) Connect the connector to the motor. (w/ Power window)

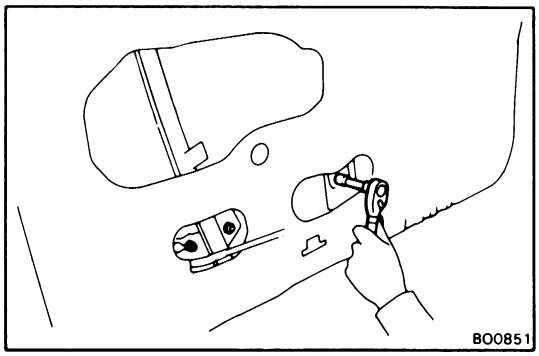

7. INSTALL DOOR GLASS

(a) Insert the glass in the door cavity.

(b) Install the glass with two nuts and bolt to the brackets.

8. INSTALL TWO DOOR GLASS STOPPERS

Finger tighten the two bolts.

9. INSTALL TWO DOOR TRIM SUPPORTS

Finger tighten the two bolts.

10. (w/ Power Window)
INSTALL POWER WINDOW RELAY

(a) Connect the connector to the relay.

(b) Install the relay with two screws.

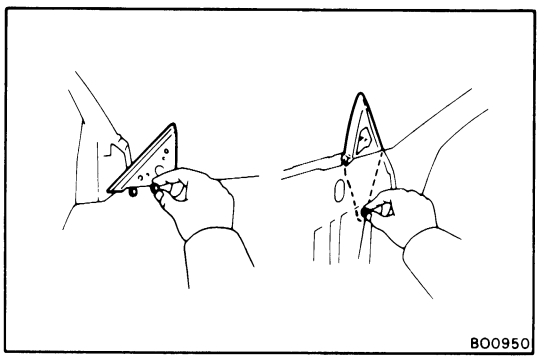

11. INSTALL FRONT LOWER FRAME

Finger tighten the nut and two bolts.

12. INSTALL BELT MOULDING
(See page BO-22)

13. INSTALL DOOR WEATHERSTRIP

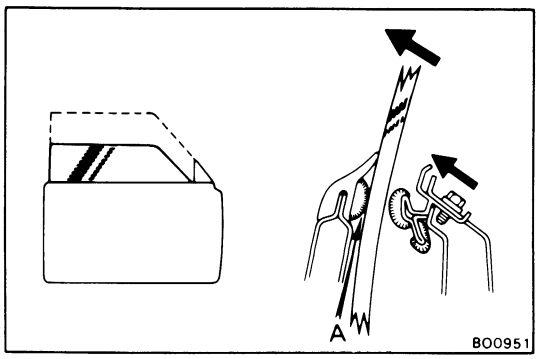

14. ADJUST DOOR TRIM SUPPORT

(a) Raise up the door glass to the middle.

(b) Push the door glass lightly to the belt moulding, and push the door trim support lightly to the glass.

(c) Tighten the door trim support bolt.

(d) Check that there is a slight gap at "A".

CAUTION: Be careful not to push the door trim support too much.

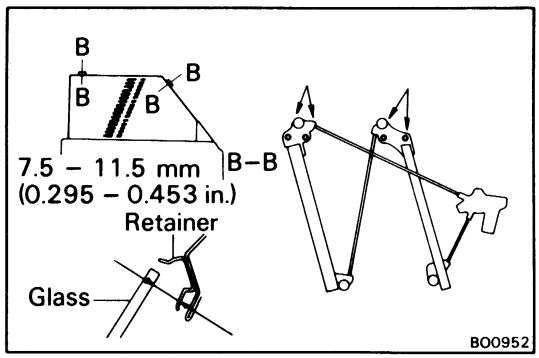

15. ADJUST DOOR GLASS

(a) Close the door glass.

(b) Remove the roof side weatherstrip and inner clips.

(c) Check that the gap between the glass and the weatherstrip retainer is as specified.

If the gap is not as specified, turn the stud bolts of the window regulator.

NOTE: Turn both stud bolts of each regulator guide an equal amount.

(d) Install the inner clips and roof side weatherstrip.

(e) Check that the gap between the glass and the center pillar moulding is as specified.

If the gap is not as specified, move the glass back and forth.

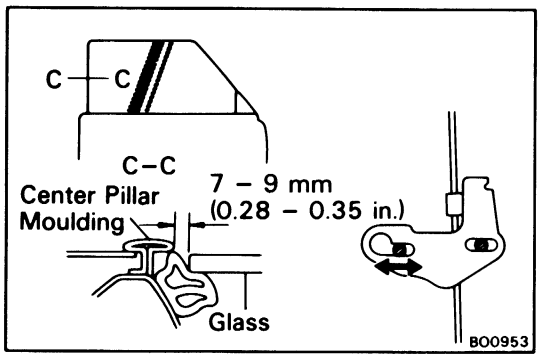

(f) Check that the gap between the glass and the roof drip moulding is as specified.

If the gap is not as specified, move the door glass stopper.

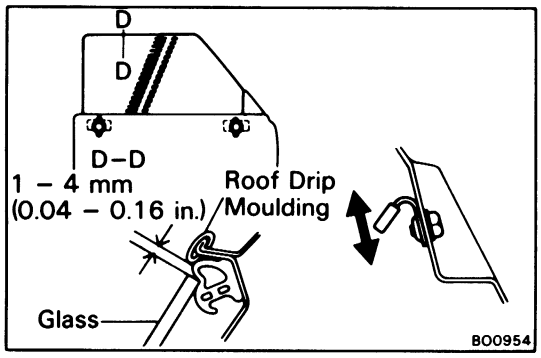

(g) Check that there is no gap between the glass and front lower frame, and check that there is no gap between the front lower frame and weatherstrip.

If there is a gap, adjust by moving the front lower frame.

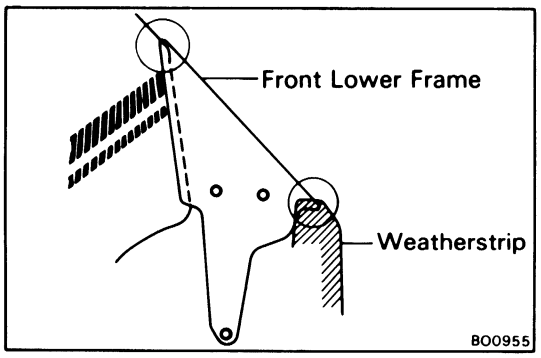

(h) When closing the window, check that the front side stops first and that the rear side rises an additional 5 – 10 mm (0.20 – 0.39 in.) before closing.

If it is not correct, adjust by moving the glass.

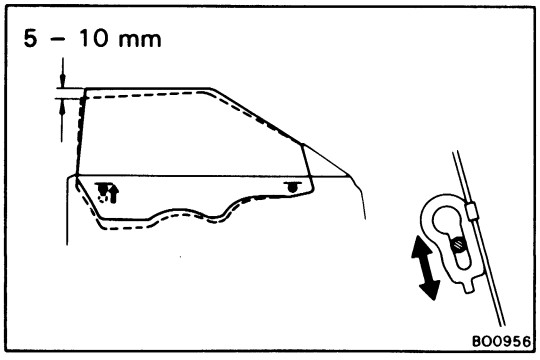

16. CHECK DOOR GLASS

(a) Check that the door trim support does not push the door glass too much.

(b) When the glass is closed, check that the weatherstrip is not rolled up.

(c) Check that the glass movement is smooth.

If the above conditions are not met, readjust the glass.

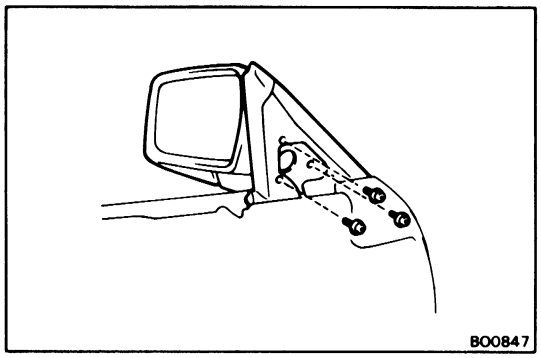

17. INSTALL REAR VIEW MIRROR

(a) Install the rear view mirror with the three screws.

(b) Connect the connector. (w/ Remote control mirror)

18. REMOVE POWER WINDOW RELAY (w/ POWER WINDOW)

(a) Remove the two screws.

(b) Disconnect the connector from the relay.

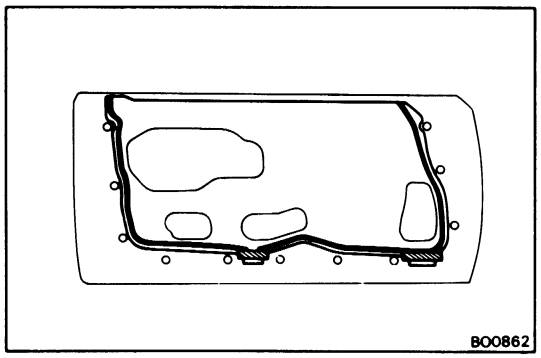

19. INSTALL SERVICE HOLE COVER

(a) Install the service hole cover with adhesive.

(b) Insert the lower edge of the cover into the panel slit.

(c) Seal the panel slit with cotton tape.

CAUTION: Do not block the trim clip seating with the tape.

20. INSTALL DOOR TRIM NO. 1 BRAKET

21. INSTALL POWER WINDOW RELAY (w/ POWER WINDOW)

(a) Connect the connector to the relay.

(b) Install the relay with two screws.

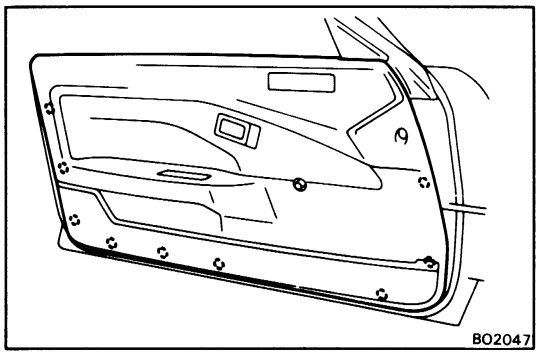

22. INSTALL DOOR TRIM

(a) Connect the connector. (w/ Power window)

(b) Install the door trim with clips to the inside door panel by tapping.

(c) Install the four screws and cap.

(d) Install the inside pull handle with the two screws.

23. INSTALL REAR VIEW MIRROR COVER

24. INSTALL INSIDE HANDLE BEZEL

25. INSTALL WINDOW REGULATOR HANDLE

With door glass fully closed, install the plate and window regulator handle with a snap ring as shown.

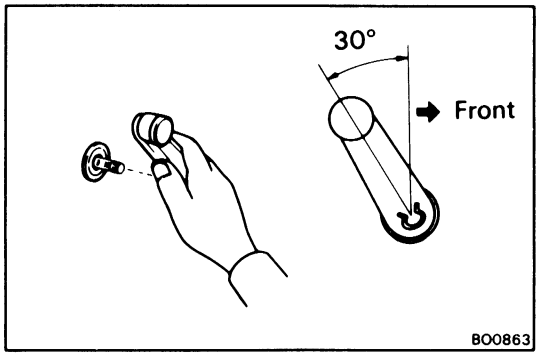

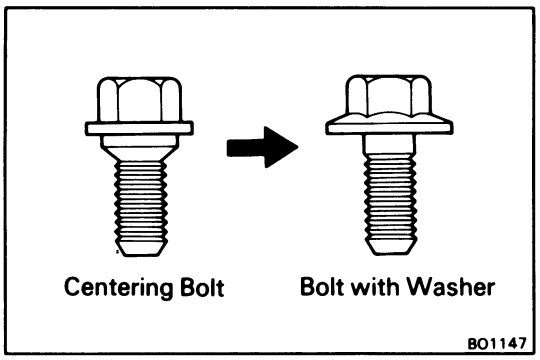

ADJUSTMENT OF FRONT DOOR

NOTE: Since the centering bolt is used as the door hinge set bolt, the door can not be adjusted with it on. Substitute the bolt with washer for the centering bolt.

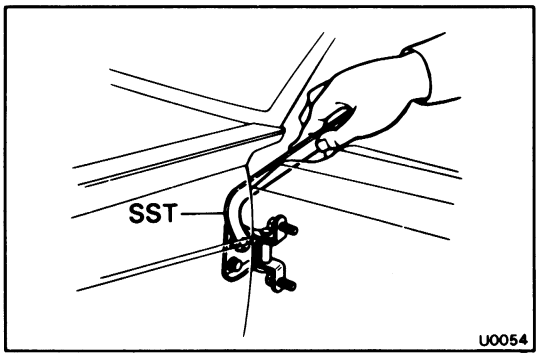

1. ADJUST DOOR IN FORWARD/REARWARD AND VERTICAL DIRECTIONS

Using SST, adjust the door by loosening the body side hinge bolts.

SST 09812-00010

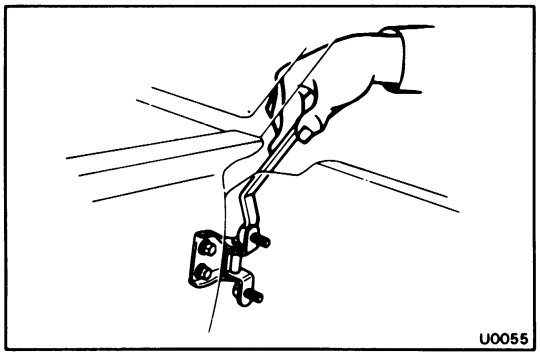

2. ADJUST DOOR IN LEFT/RIGHT AND VERTICAL DIRECTIONS

Adjust the door by loosening the door side hinge bolts.

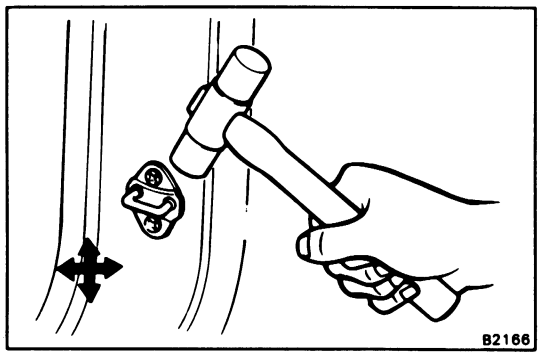

3. ADJUST DOOR LOCK STRIKER

(a) Check that the door fit and door lock linkages are adjusted correctly.

(b) Adjust the striker position by slightly loosening the mounting screws, and hitting the striker with a hammer.
Tighten the striker mounting screws again.

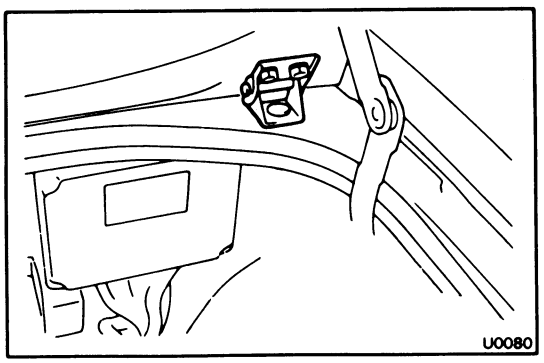

LUGGAGE COMPARTMENT LID

ADJUSTMENT OF LUGGAGE COMPARTMENT LID

1. **ADJUST LUGGAGE COMPARTMENT LID IN FORWARD/REARWARD AND LEFT/RIGHT DIRECTIONS**

   Adjust the lid by loosening the hinge bolts and nut.

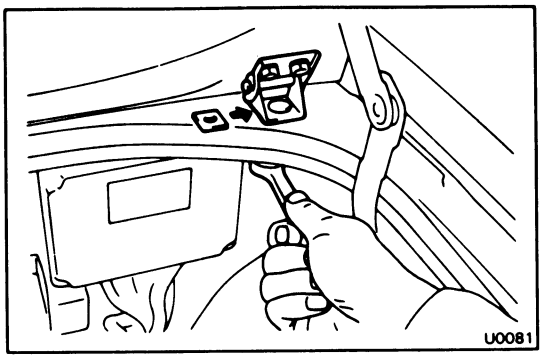

2. **ADJUST FRONT EDGE OF LUGGAGE COMPARTMENT LID IN VERTICAL DIRECTION**

   Adjust the lid by increasing or decreasing the number of the shims.

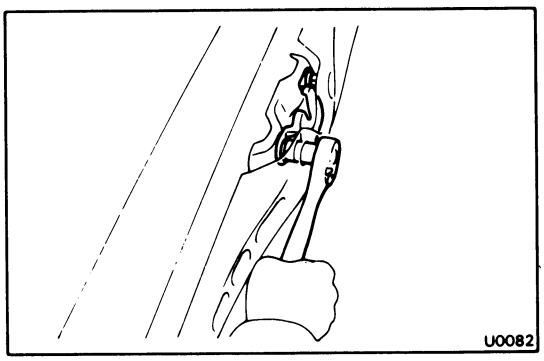

3. **ADJUST LOCK**

   Adjust the lock by loosening the mounting bolts.

MOULDING

Windshield Outside Moulding

COMPONENTS

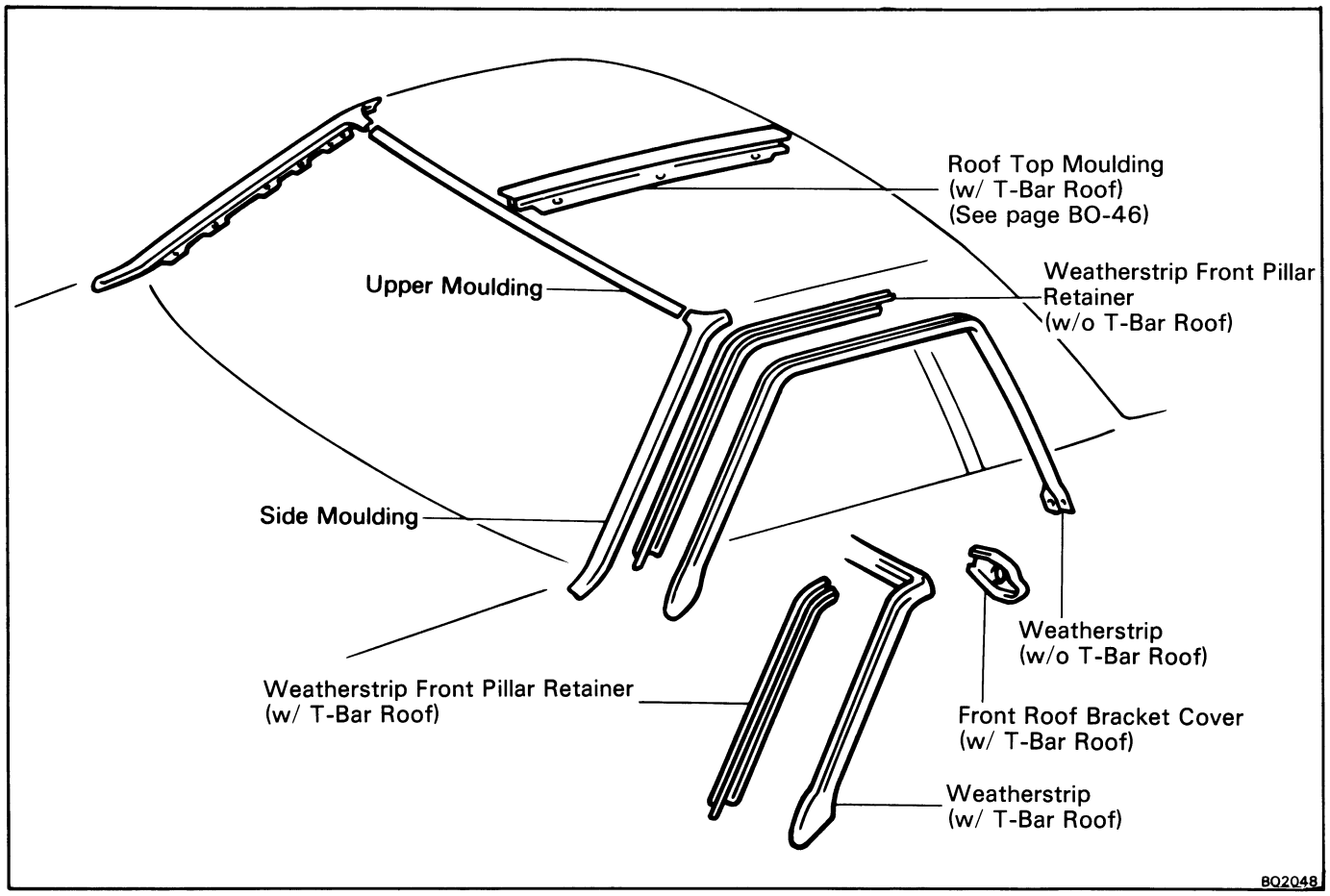

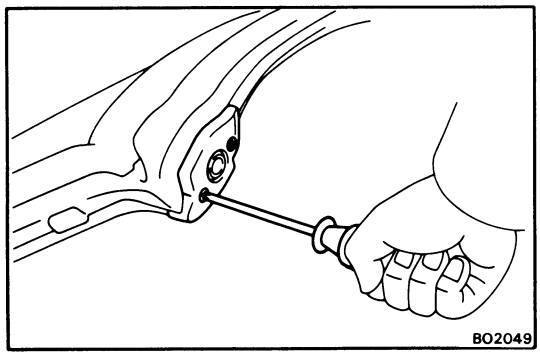

REMOVAL OF WINDSHIELD MOULDING

1. REMOVE FRONT ROOF BRACKET COVER (w/ T-BAR ROOF)

Remove the two screws and front roof bracket cover.

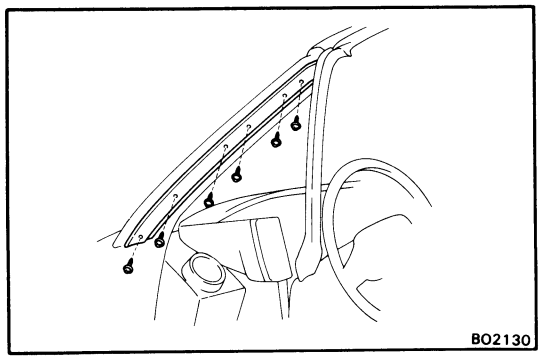

2. REMOVE WEATHERSTRIP FRONT PILLAR RETAINER (w/ T-BAR ROOF)

(a) Disconnect the weatherstrip from the weatherstrip front pillar retainer.

(b) Remove the weatherstrip front pillar retainer.

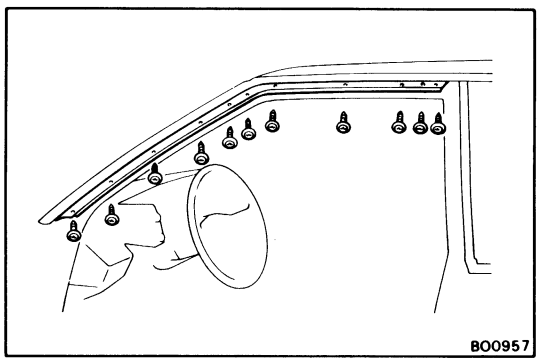

3. REMOVE WEATHERSTRIP FRONT PILLAR RETAINER (w/o T-BAR ROOF)

(a) Remove the weatherstrip.

(b) Remove the weatherstrip front pillar retainer.

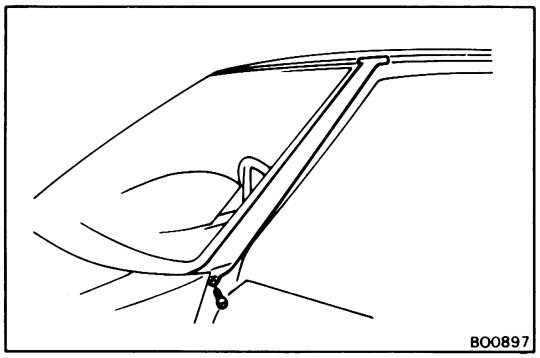

4. REMOVE SIDE MOULDING

Remove the screw and side moulding.

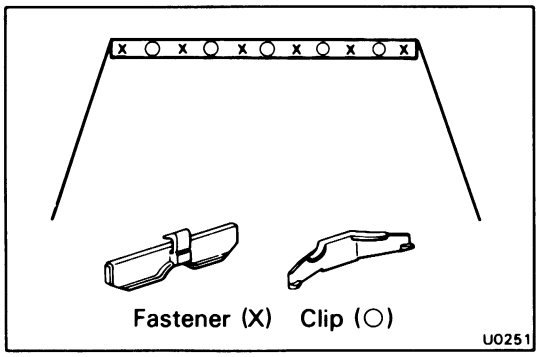

5. REMOVE UPPER MOULDING

(a) Carefully apply adhesive tape to protect the body.

NOTE: Locations of the clips and fasteners are as shown in the figure.

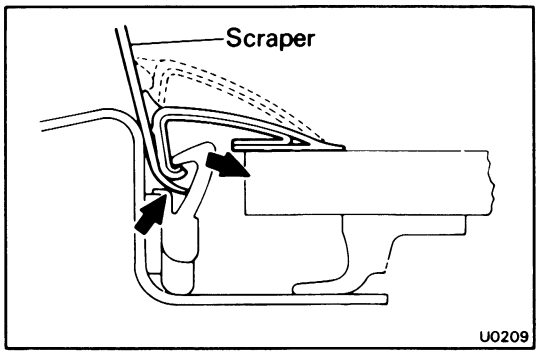

(b) Insert the tip of a scraper between the body and moulding.

(c) Pry the moulding loose from the claws of the clips and fasteners.

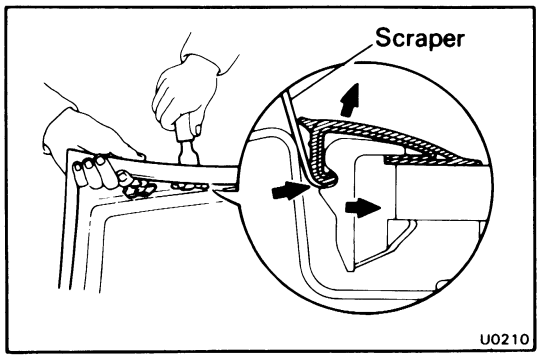

(d) Remove the moulding from the clips.

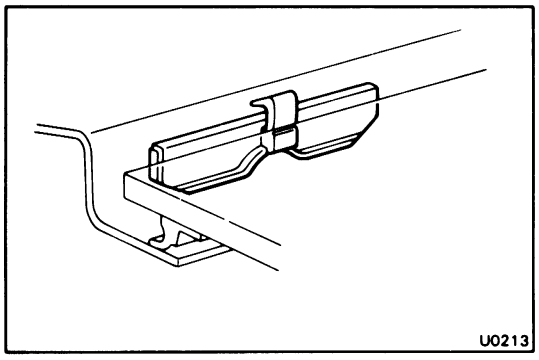

REPLACEMENT OF FASTENER AND CLIP

1. REPLACE FASTENER

(a) Remove the damaged fastener.

(b) Cut off the old adhesive around the fastener installation area.

NOTE: Be careful not to damage the body.

(c) Clean the installation area.

(d) Install a new fastener onto the body.

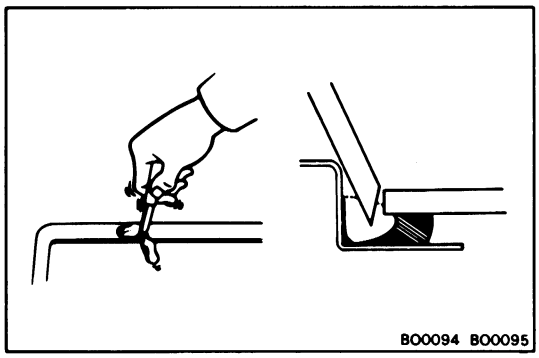

2. REPLACE CLIP

(a) Remove the damaged clip.

(b) Cut off the old adhesive around the clip installation area.

NOTE: Be careful not to damage the body.

(c) Grind a notch into the clip so it latches onto the glass edge.

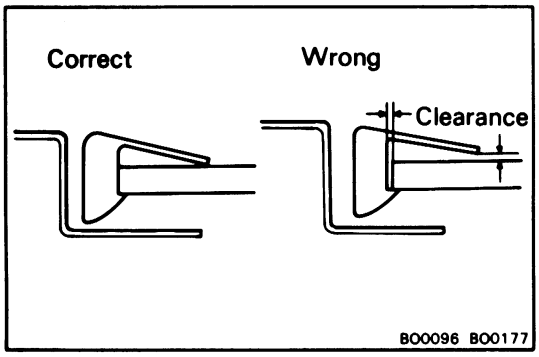

(d) Temporarily install the clip and confirm that its tip is not sunk below the surface of the glass.

If the tip of the clip is sunk below the surface of the glass, replace it.

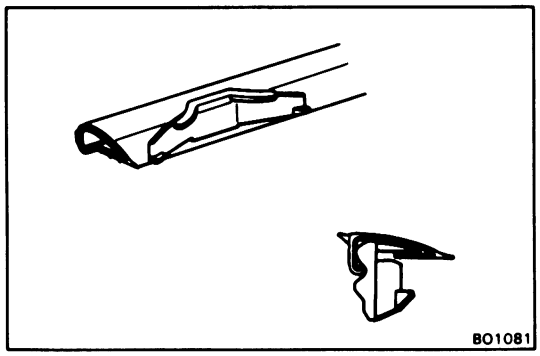

INSTALLATION OF WINDSHIELD MOULDING

1. INSTALL NEW CLIP INTO UPPER MOULDING

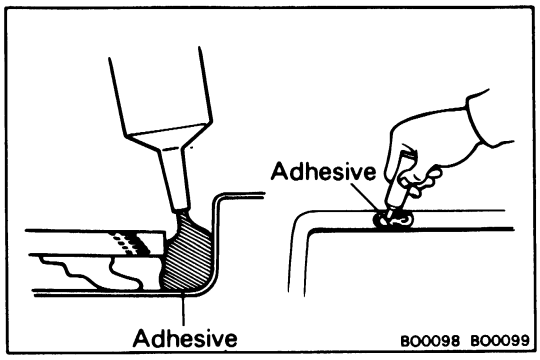

2. APPLY ADHESIVE AT A NEW CLIP INSTALLATION AREA

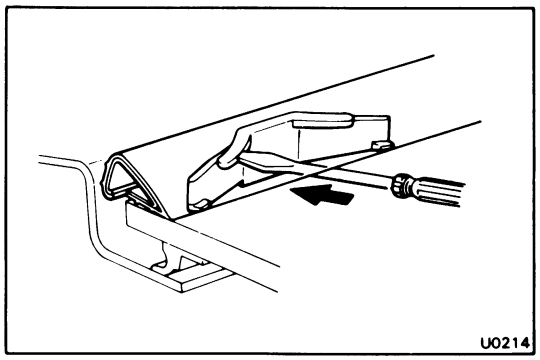

3. INSTALL UPPER MOULDING

(a) Place the moulding onto the body.

(b) Pry up the clips on the body side and install to the moulding.

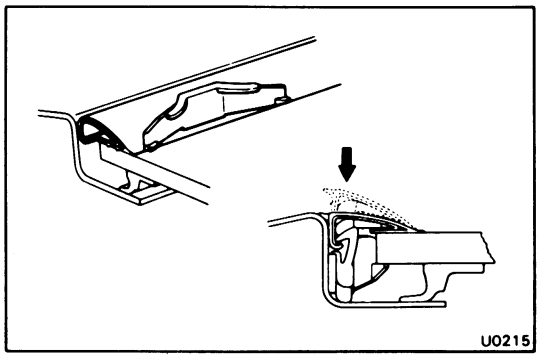

(c) Tap the moulding with your hand to fasten the clips at the glass edge.

At the same time, install the fasteners by tapping them by hand.

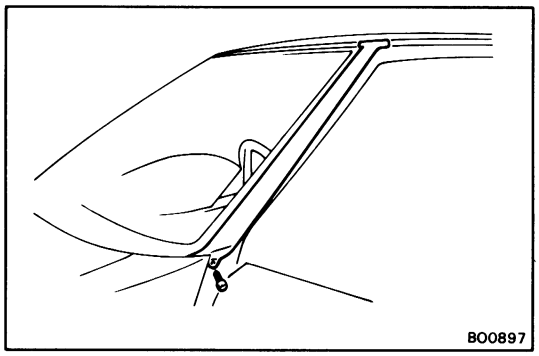

4. INSTALL SIDE MOULDING

Install the screw and side moulding.

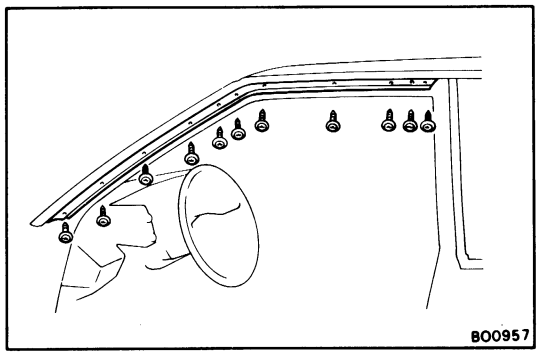

5. INSTALL WEATHERSTRIP FRONT PILLAR RETAINER (w/o T-BAR ROOF)

(a) Install the weatherstrip front pillar retainer.

(b) Install the weatherstrip.

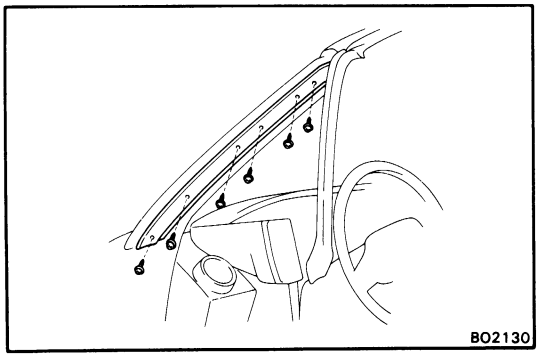

6. INSTALL WEATHERSTRIP FRONT PILLAR RETAINER (w/ T-BAR ROOF)

(a) Install the weatherstrip front pillar retainer and inner clip.

(b) Connect the weatherstrip to the front weatherstrip retainer.

7. INSTALL FRONT ROOF BRACKET COVER (w/ T-BAR ROOF)

Side Moulding

COMPONENTS

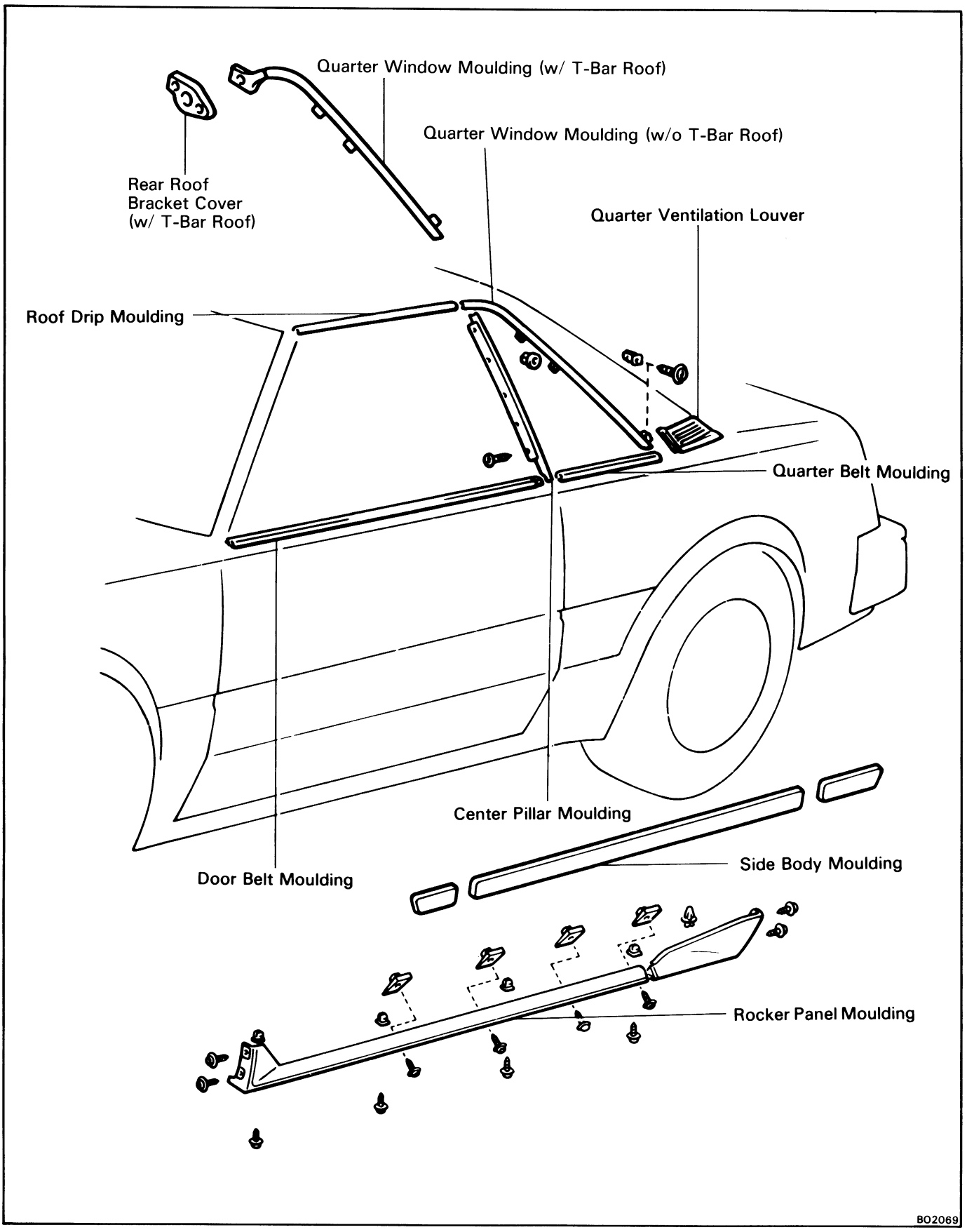

REMOVAL OF ROOF DRIP MOULDING

1. **REMOVE WINDSHIELD SIDE MOULDING**
   (See page BO-17)

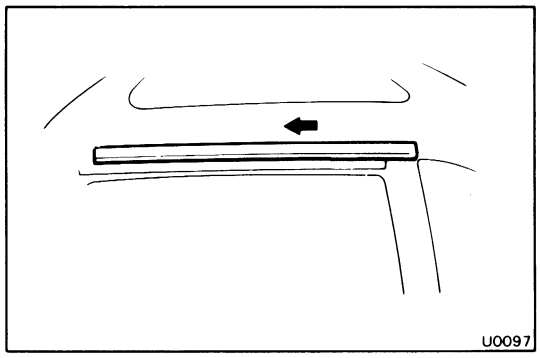

2. **REMOVE ROOF DRIP MOULDING**
   (a) Slide the moulding forward.

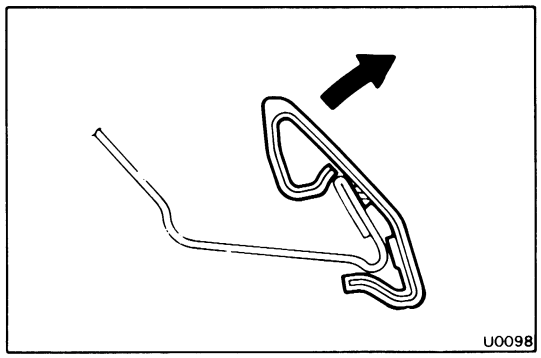

   (b) Pull the moulding off from the end.

INSTALLATION OF ROOF DRIP MOULDING

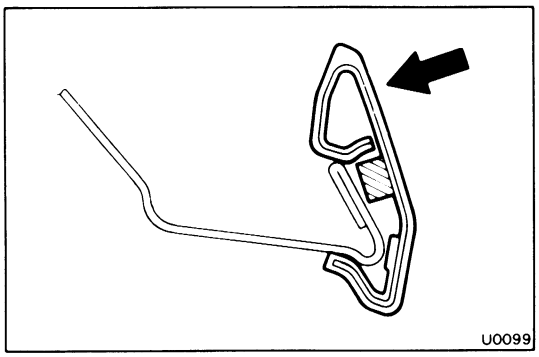

1. **INSTALL ROOF DRIP MOULDING**
   Attach the lower edge of the moulding to the body flange, and tap on by hand.

2. **INSTALL WINDSHIELD SIDE MOULDING**
   (See page BO-18)

REMOVAL OF DOOR BELT MOULDING

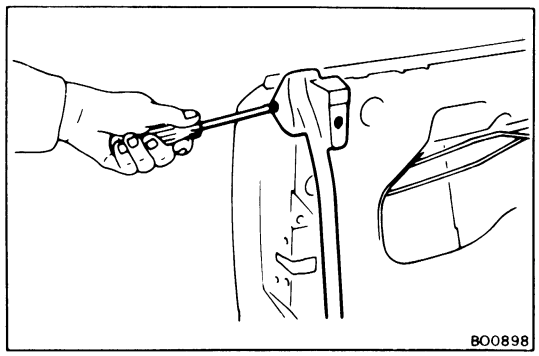

1. **REMOVE DOOR TRIM**
   (See page BO-6)

2. **REMOVE DOOR WEATHERSTRIP**

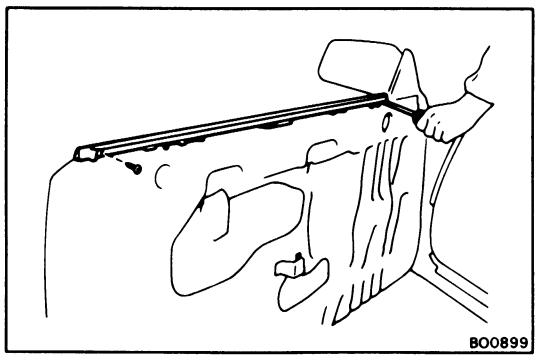

3. REMOVE DOOR BELT MOULDING

(a) Remove the two screws.

(b) Pull the moulding off from the door.

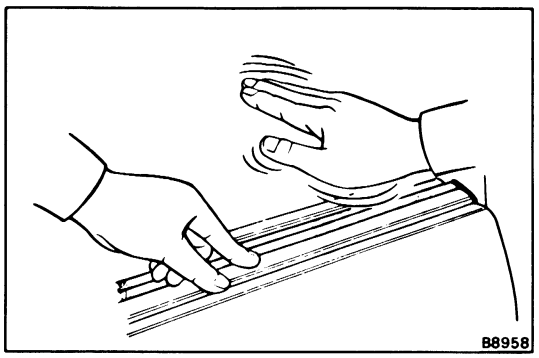

INSTALLATION OF DOOR BELT MOUDLING

1. INSTALL BELT MOULDING

(a) Tap the moulding onto the door by hand.

(b) Install the two screws.

2. INSTALL DOOR WEATHERSTRIP

3. INSTALL DOOR TRIM

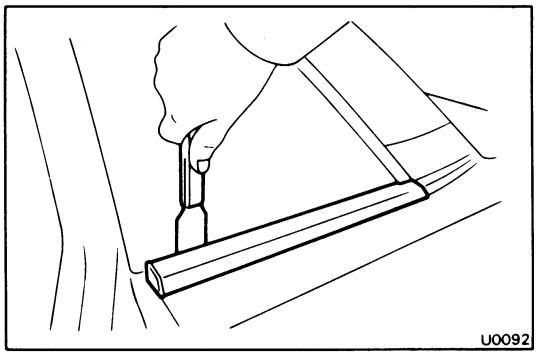

REMOVAL OF QUARTER WINDOW MOULDING

1. REMOVE QUARTER BELT MOULDING

Using a scraper, remove the moulding.

NOTE: Apply tape to the scraper brade to prevent scratching the vehicle body.

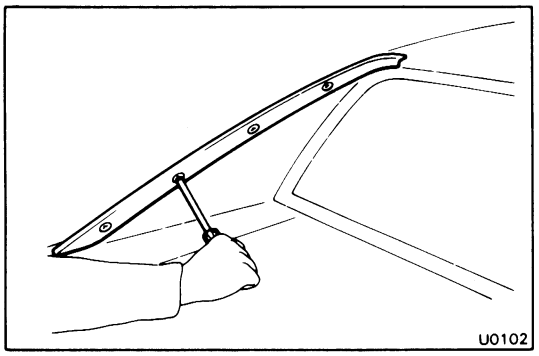

2. REMOVE QUARTER OUTSIDE MOULDING

Remove the four screws and the moulding.

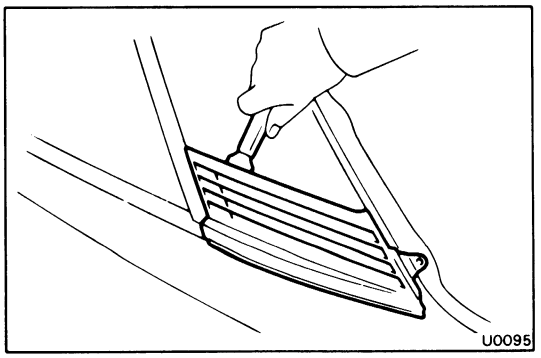

3. REMOVE QUARTER VENTILATION LOUVER

Using a scraper, remove the louver.

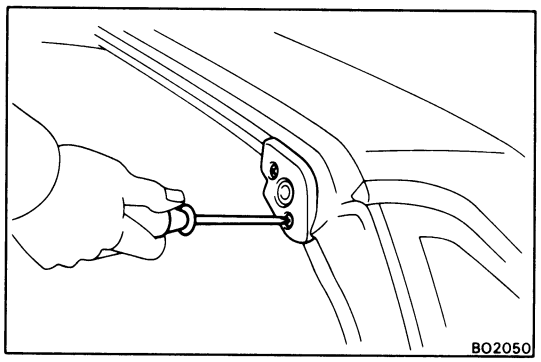

4. REMOVE REAR ROOF BRACKET COVER (w/ T-BAR ROOF)

Remove the two screws and roof bracket cover.

5. REMOVE REAR ROOF BRACKET MOUNTING NUT (w/ T-BAR ROOF)

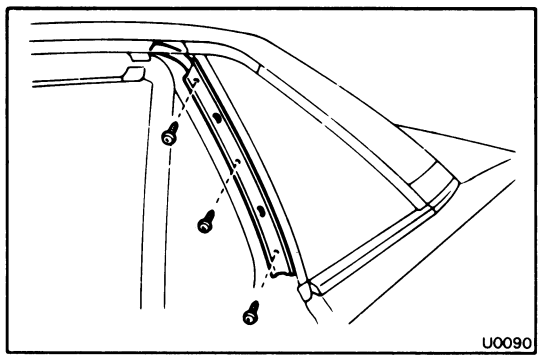

6. REMOVE CENTER PILLAR MOULDING

(a) Remove the weatherstrip.

(b) Remove the three screws and weatherstrip retainer.

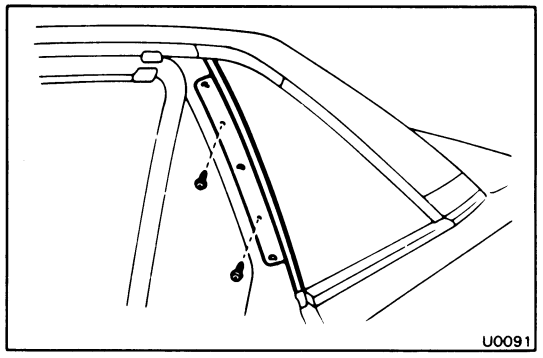

(c) Remove the two screws and center pillar moulding.

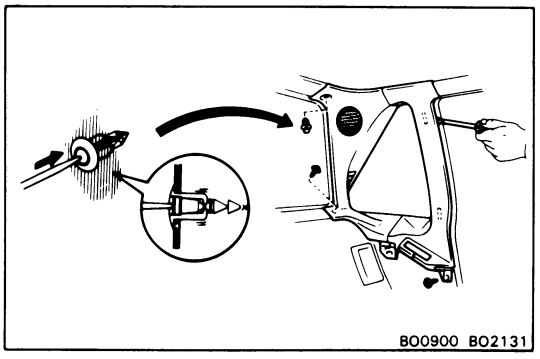

7. REMOVE ROOF SIDE INNER GARNISH

(a) Remove the two screws and quarter trim.

(b) Remove the seat belt shoulder anchor.

(c) Remove the two screws.

(d) Push in the center of the clip and remove it.

(e) Using a screwdriver, pry out the clips.

(f) Remove the roof side inner garnish.

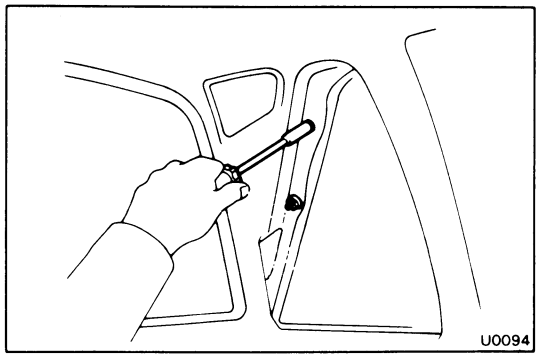

8. REMOVE QUARTER WINDOW MOULDING

(a) Remove the two nuts.

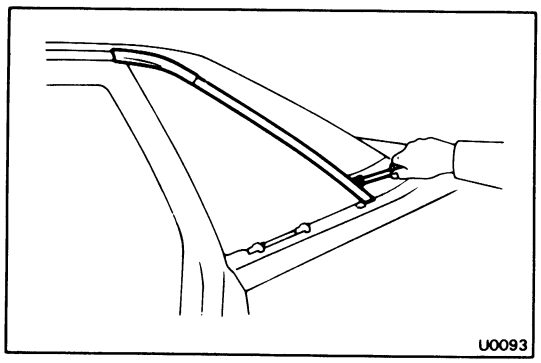

(b) Remove the screw and the moulding.

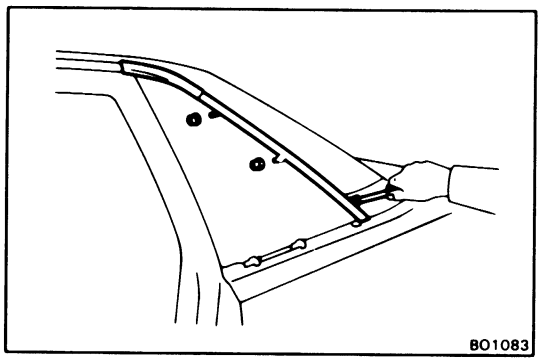

INSTALLATION OF QUARTER WINDOW MOULDING

1. INSTALL QUARTER WINDOW MOULDING

Install the moulding with the two nuts and screw.

2. INSTALL QUARTER VENTILATION LOUVER

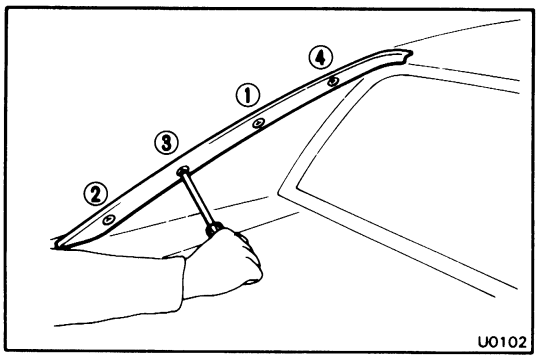

3. INSTALL QUARTER OUTSIDE MOULDING

(a) Install the quarter outside moulding.

(b) Tighten the four screws in order as shown in the figure.

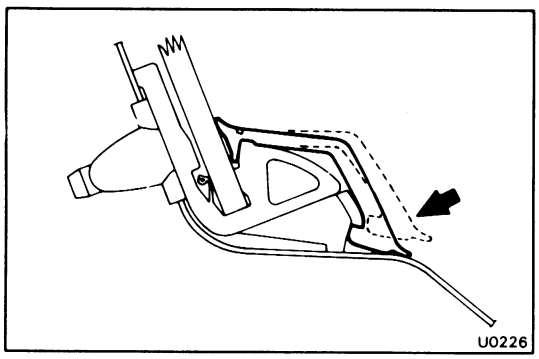

4. INSTALL QUARTER BELT MOULDING

Tap the moulding in by hand.

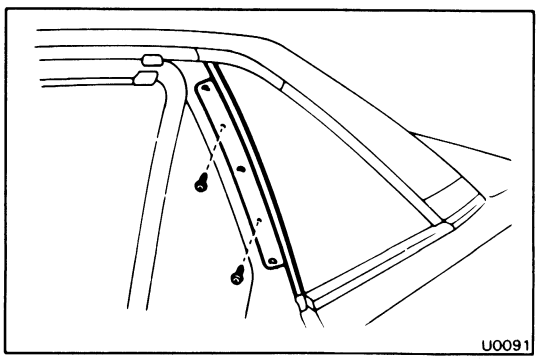

5. INSTALL CENTER PILLAR MOULDING

(a) Install the center pillar moulding with the two screws.

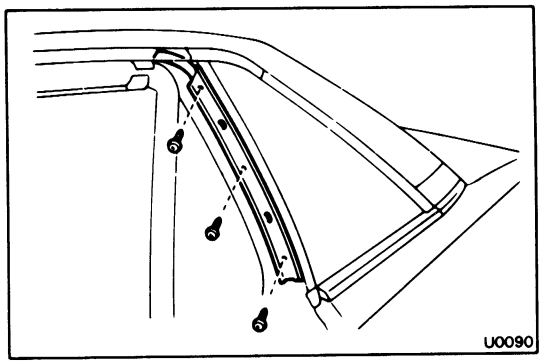

(b) Install the weatherstrip retainer with the three screws.

(c) Install the weatherstrip.

6. INSTALL REAR ROOF BRACKET MOUNTING NUT (w/ T-BAR ROOF)

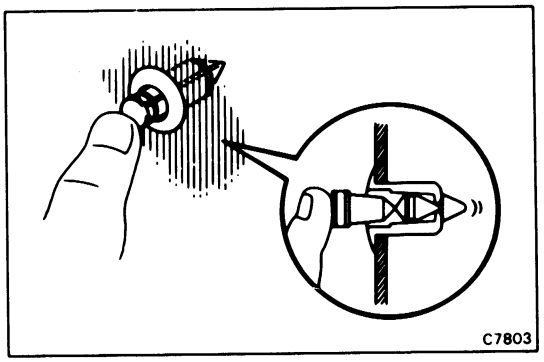

7. INSTALL ROOF SIDE INNER GARNISH

(a) Install the roof side garnish with the two screws and clip.

NOTE: To reinstall the clip, pull its center out to the second "waist". Then insert the clip into the hole and press in the center.

(b) Install the quarter trim with the two screws.

8. INSTALL SEAT BELT SHOULDER ANCHOR

9. INSTALL REAR ROOF BRACKET COVER (w/ T-BAR ROOF)

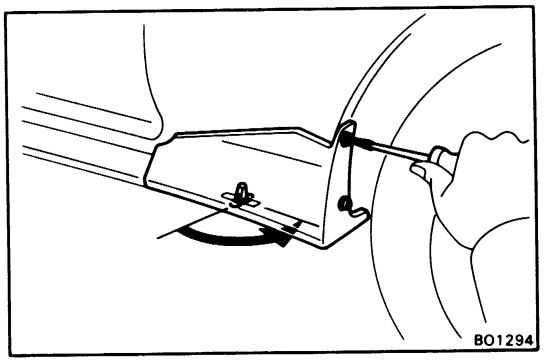

REMOVAL OF ROCKER PANEL MOULDING

1. REMOVE FRONT MOULDING

Remove the ten screws and moulding.

2. REMOVE REAR MOULDING

(a) Remove the clip from the moulding.

(b) Remove the two screws and moulding.

INSTALLATION OF ROCKER PANEL MOULDING

1. INSTALL REAR MOULDING

(a) Install the moulding with the two screws.

(b) Install the clip to the moulding.

2. INSTALL FRONT MOULDING

Install the moulding with the ten screws.

Side Body Moulding

TOOLS AND SUPPLIES

Part No.	Part name	Quantity
08850-00051	Adhesive (Super special) 20g (0.71 oz.)	1
	Cleaner (for cleaning body and removing body oil stains) Heat light	

Precautions for storing moulding material:
- Store in a cool place, avoiding direct sunlight, high temperatures and dust.
- The moulding is of polyvinyl chloride, so do not allow it to come in contact with thinner or other solvent, open flame, or boiling water.
- The storage time for the moulding adhesive is limited to about 9 months.

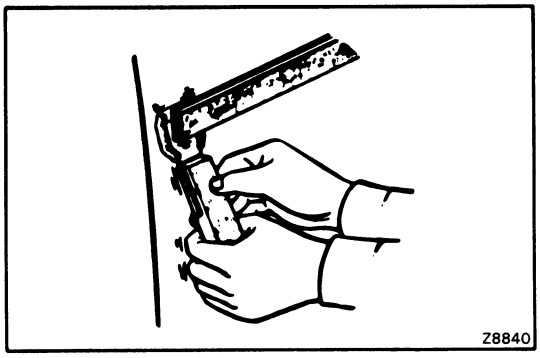

REMOVAL OF SIDE BODY MOULDING

1. REMOVE ENDS OF MOULDING

Using a scraper, pry the moulding loose about 20 mm (0.79 in.) from the ends.

NOTE: Apply tape to the scraper blade to prevent scratching the vehicle body.

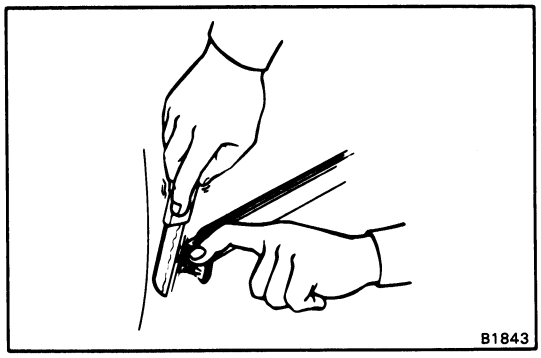

2. REMOVE MOULDING AND ADHESIVE

(a) Pull off the moulding by cutting the adhesive with a knife.

(b) Scrape off adhesive from the body with a cutter or sandpaper.

CAUTION:
- **30 – 80 mm (1.18 – 3.15 in.) of the ends of the moulding are glued tightly with a strong adhesive.**
- **Do not reuse moulding.**

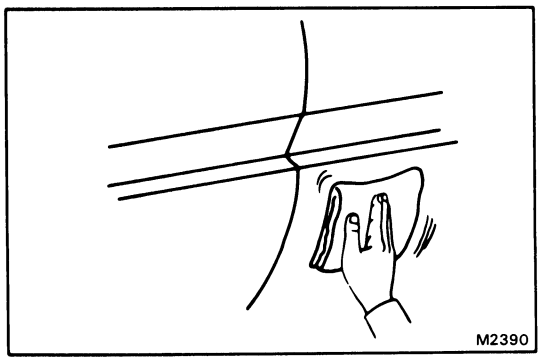

INSTALLATION OF SIDE BODY MOULDING

1. CLEAN MOULDING MOUNTING SURFACES

Wipe off stains with cleaner.

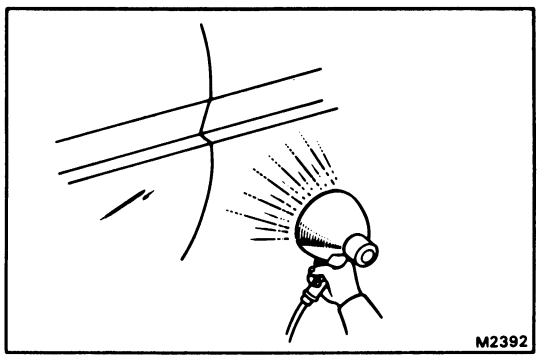

2. HEAT BODY MOUNTING SURFACE

Using a heat light, heat the body mounting surfaces to 40 – 60°C (104 – 140°F).

CAUTION: When the moulding is installed, the temperature of the mounting surface should be 20°C (68°F) or higher.

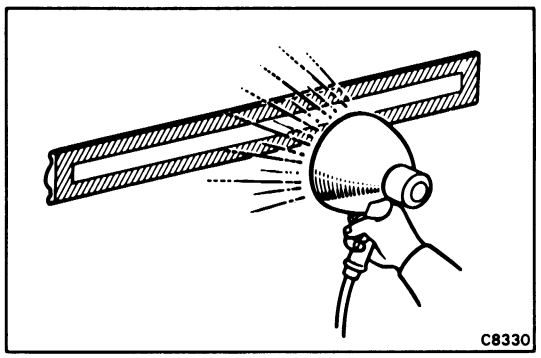

3. HEAT MOULDING

Using a heat light, heat the moulding to 30 – 60°C (86 – 140°F).

CAUTION: Do not heat the moulding excessively. The temperature should not be higher than 80°C (176°F).

4. LIFT MOULDING RELEASE SHEET FROM FACE OF MOULDING

CAUTION: When the moulding release sheet is removed, be sure that no dirt or dust can get onto the uncovered area.

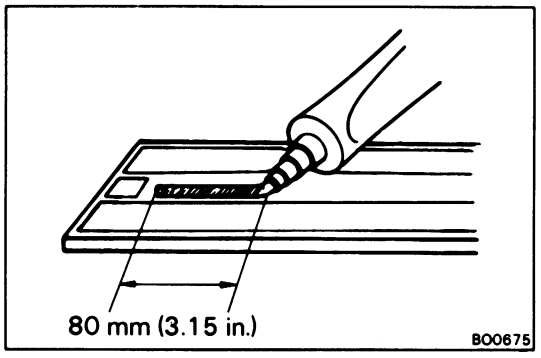

5. APPLY ADHESIVE TO MOULDING

Apply adhesive to both ends of the moulding as shown.

CAUTION: Install the moulding within 7 minutes after applying the adhesive.

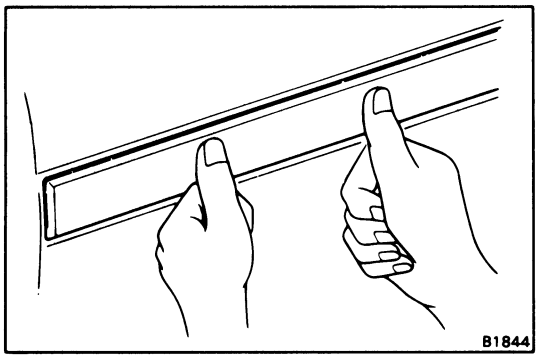

6. INSTALL MOULDING ALONG BODY PRESS LINE

Fit the moulding along the body press line, leaving the spaces shown in the illustration.

CAUTION:

- **Be sure that the body and moulding are heated to the proper temperature.**
- **Do not depress adhesive coated parts excessively: just hold them down with your thumbs.**
- **Scrape off any overflowing adhesive with a plastic spatula and clean the surface with a dry rag.**
- **After installation do not wash the vehicle for 24 hours.**

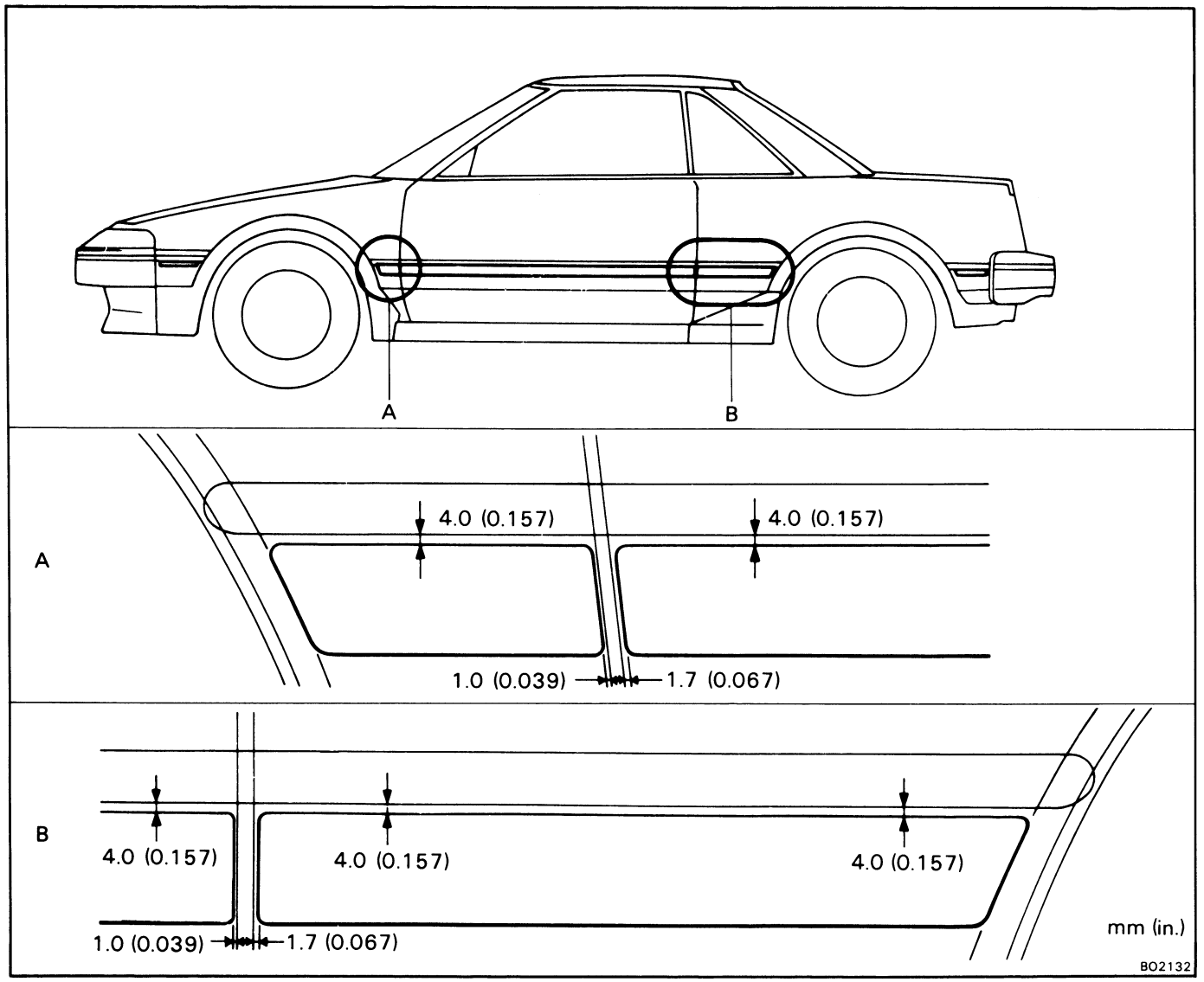

Rear Moulding

COMPONENTS

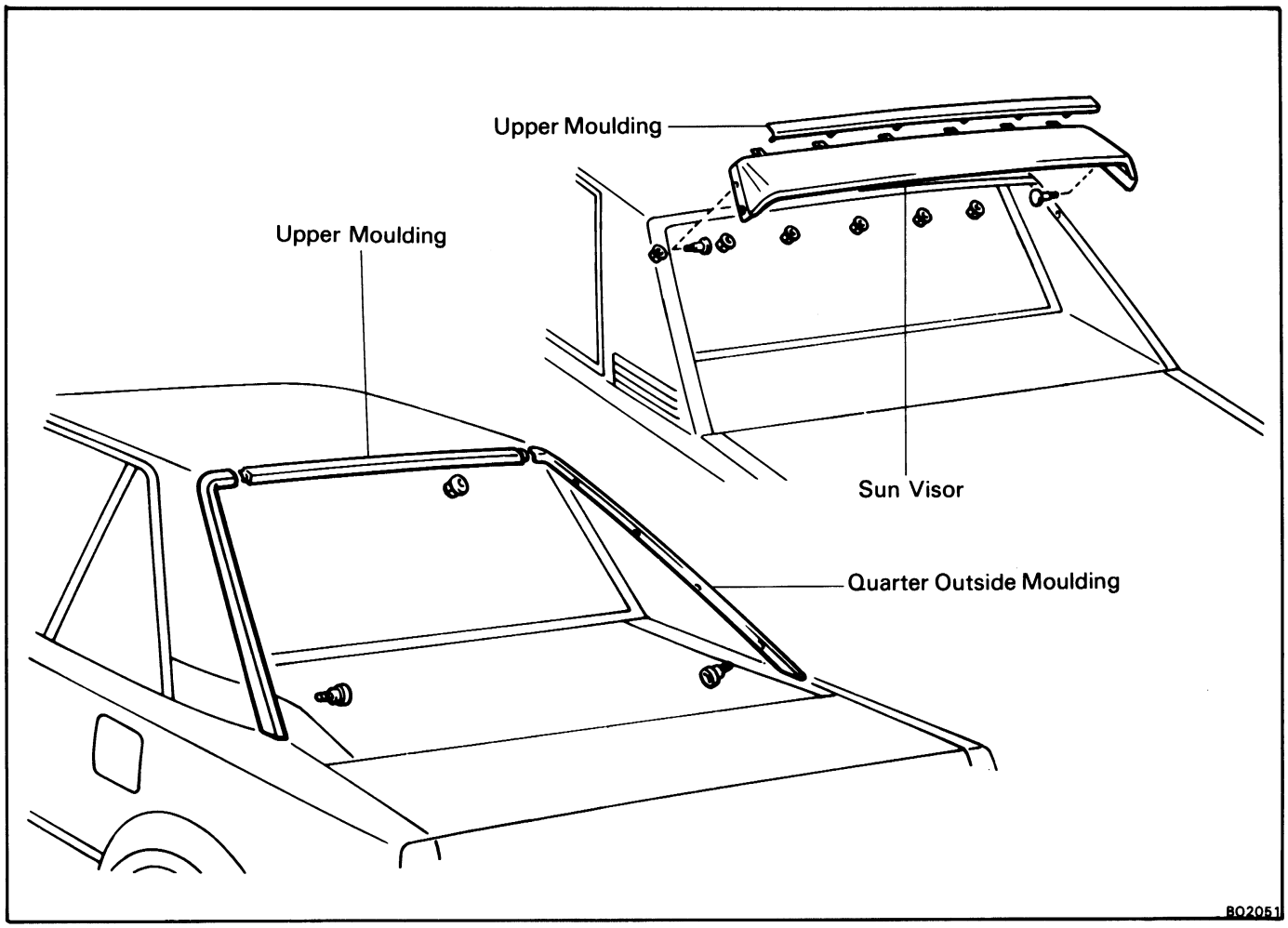

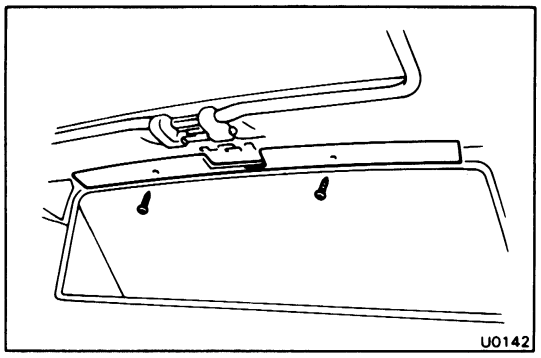

REMOVAL OF REAR MOULDING

1. REMOVE ROOM LIGHT

2. REMOVE ROOF HEADLINING REAR TRIM

Remove the two clips and two screws and roof headlining rear trim.

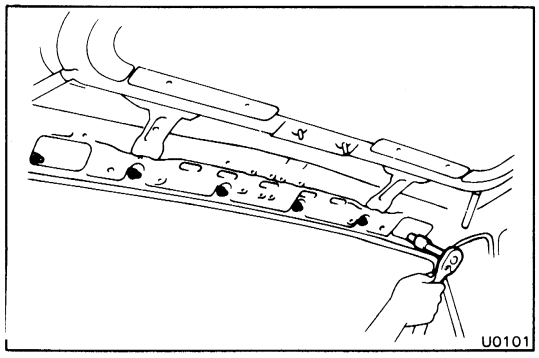

3. REMOVE UPPER MOULDING

Using deep socket wrench, remove the six nuts and upper moulding.

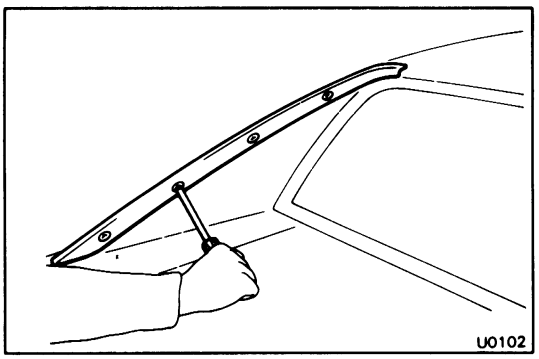

4. REMOVE QUARTER OUTSIDE MOULDING AND SUN VISOR

(a) Remove the four screws and quarter outside moulding.

(b) Remove the other side moulding and sun visor.

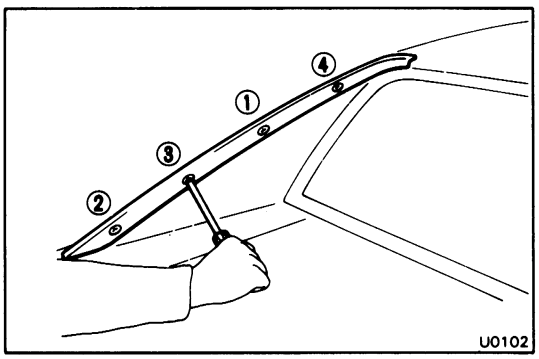

INSTALLATION OF REAR MOULDING

1. INSTALL QUARTER OUTSIDE MOULDING AND SUN VISOR

(a) Position the quarter outside moulding and sun visor.

(b) Tighten the four screws in order, as shown in the figure.

(c) Install the moulding on the opposite side in the same method.

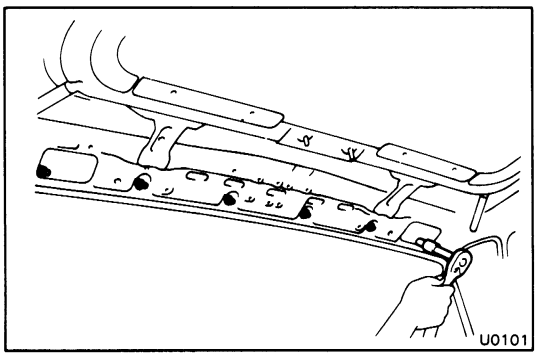

2. INSTALL UPPER MOULDING

(a) Position the upper moulding.

(b) Using deep socket wrench, tighten the six nuts in order, as shown in the figure.

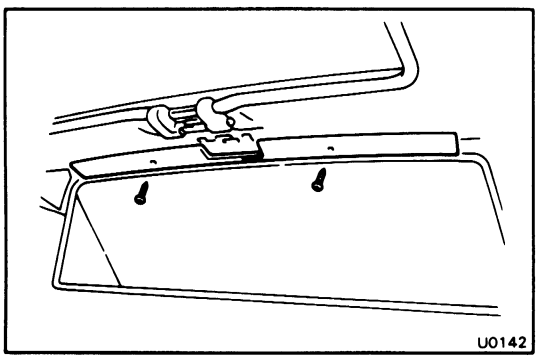

3. INSTALL ROOF HEADLINING REAR TRIM

Install the roof headlining rear trim.

4. INSTALL ROOM LIGHT

WINDSHIELD

TOOLS AND SUPPLIES

Part name and part No.	Contents of set	Quantity
Adhesive set 08850-00070 [0 – 15°C (32 – 59°F)] 08850-00080 [15 – 35°C (59 – 95°F)] 08850-00090 [35 – 45°C (95 – 113°F)]	Main agent 500 g (17.64 oz.) Hardening agent 75 g (2.65 oz.) Primer G [for glass] 20 g (0.71 oz.) Primer M [for body] 20 g (0.71 oz.) Sponge for applying primer Piano wire 0.6 mm dia. x 1 m (0.024 in. dia x 39.37 in.) Cartridge	1 1 1 1 2 1 1
Dam kit 04562-30040	Dam Double-stick tape (for sticking on dam)	
	Sealant gun (for applying adhesive) Glass or steel sheet (for mixing adhesive) Putty spatula (for mixing adhesive and correcting adhered parts) Cleaner (for cleaning adhering surfaces)	

Ambient temperature	Part No.	Part name
0 – 15°C (32 – 59°F)	08850-00070	Windshield glass adhesive set No. 15
15 – 35°C (59 – 95°F)	08850-00080	Windshield glass adhesive set No. 35
35 – 45°C (95 – 113°F)	08850-00090	Windshield glass adhesive set No. 45

1. CHOOSE SUITABLE ADHESIVE SET

Use an adhesive set suitable for the ambient temperature.

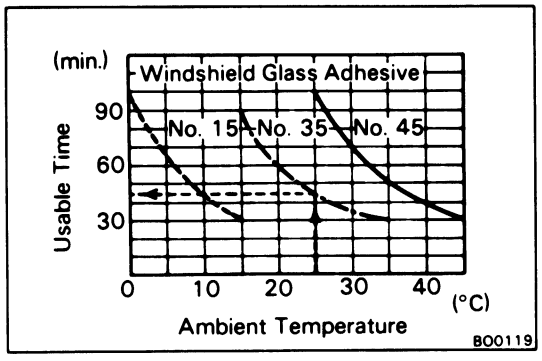

2. CHECK ADHESIVE USABLE TIME

After mixing the main and hardening agents, finish glass installation within the specified time as shown.

Example:
For glass installation in an ambient temperature of 25°C (77°F), apply adhesive set No. 35 within 45 minutes.

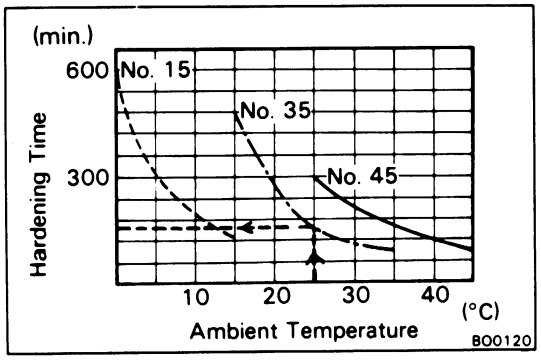

3. CHECK ADHESIVE HARDENING TIME

First, mix the main and hardening agents.
Then, perform a leak test only after the hardening time has elapsed.

Example:
The hardening time for adhesive set No. 35 with an ambient temperature of 25°C (77°F) is 2 ½ hours.

CAUTION: Do not drive the vehicle until at least double the hardening time has elapsed.

COMPONENTS

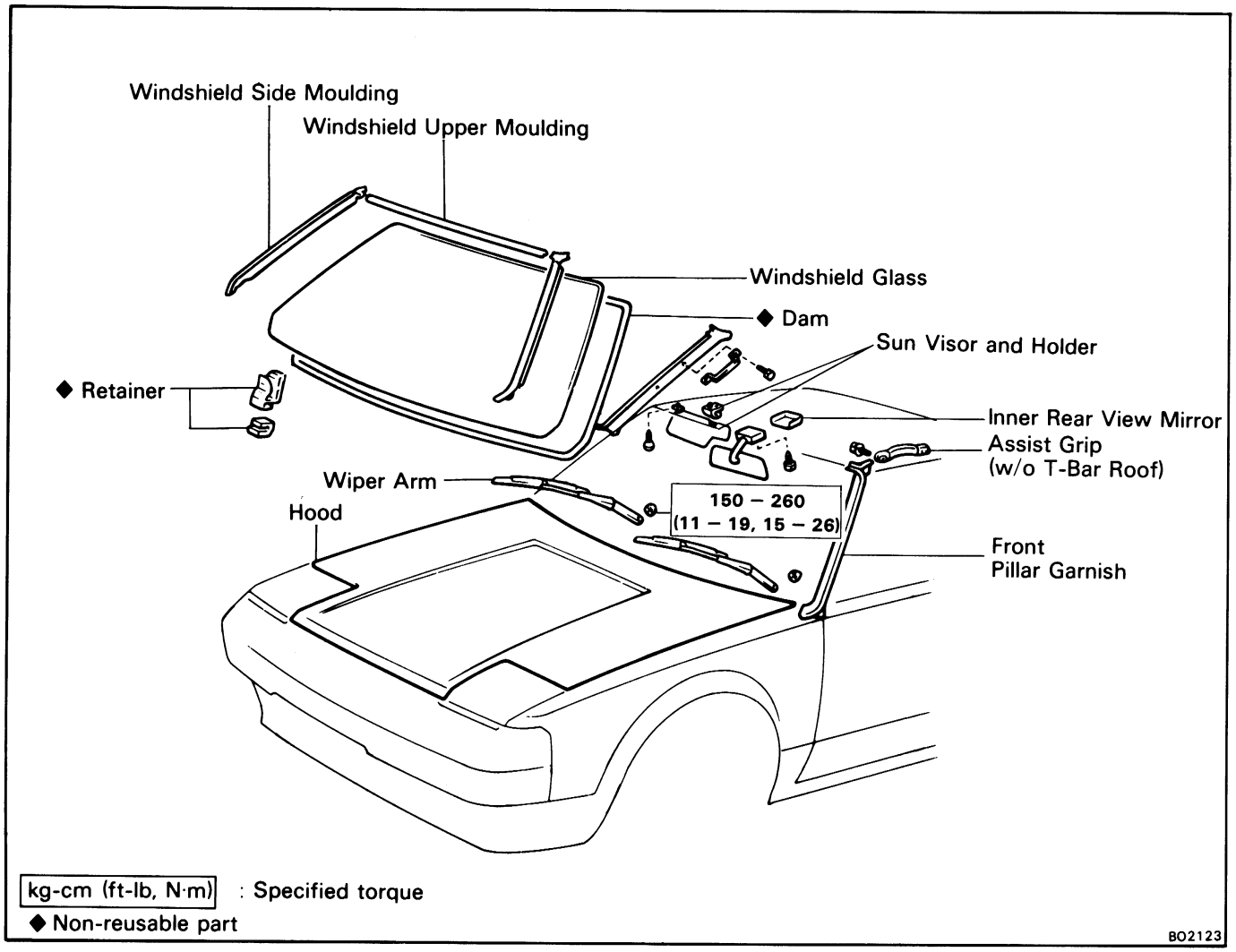

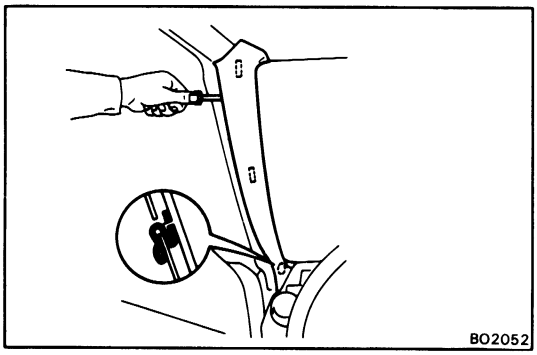

REMOVAL OF WINDSHIELD

1. REMOVE FRONT PILLAR GARNISH

(a) Remove the two screws and assist grip. (w/ T-bar roof)

(b) Remove the two screws and front roof bracket cover. (w/ T-bar roof)

(c) Using a screwdriver, pry out the clips.

NOTE: Tape the screwdriver tip before using.

(d) Pull the garnish upward to remove it.

2. REMOVE FOLLOWING PARTS:

(a) Sun visors and holders

(b) Inner rear view mirror

(c) Hood

(d) Wiper arms

(e) Heater air duct screens

3. REMOVE WINDSHIELD MOULDING
(See page BO-16)

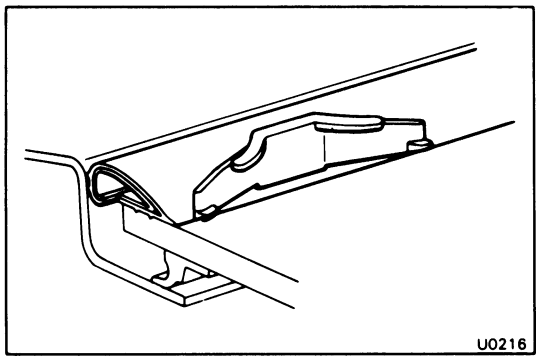

4. REMOVE CLIPS

Be careful not to damage the clips when removing them from around the glass.

NOTE: Do not remove the fasteners, but replace any that are deformed.

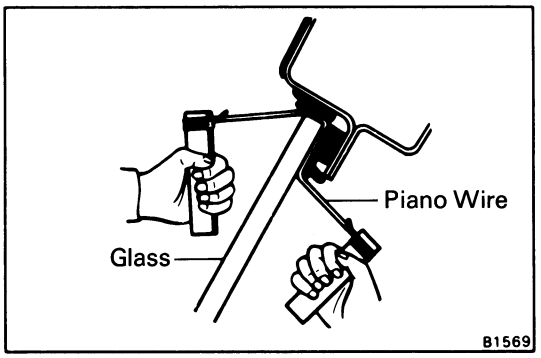

5. REMOVE WINDSHIELD GLASS

(a) Push piano wire through from the interior.

(b) Tie both wire ends to a wooden block or equivalent.

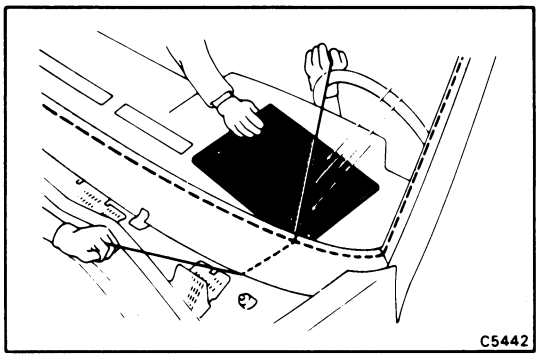

CAUTION: When separating, take care not to damage the paint and interior and exterior ornaments.

To prevent scratching the safety pad when removing the windshield, place a plastic sheet between the piano wire and safety pad.

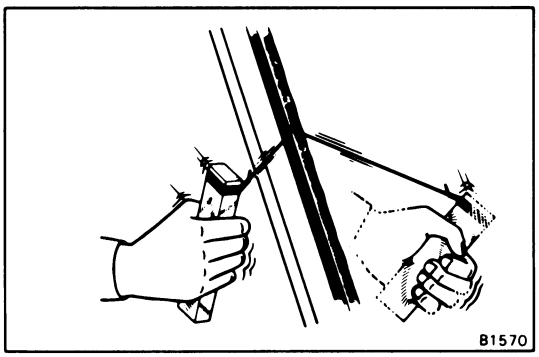

(c) Cut the adhesive by pulling the piano wire around it.

(d) Remove the glass.

CAUTION: Leave as much of the urethane layer on the body as possible when cutting off the glass.

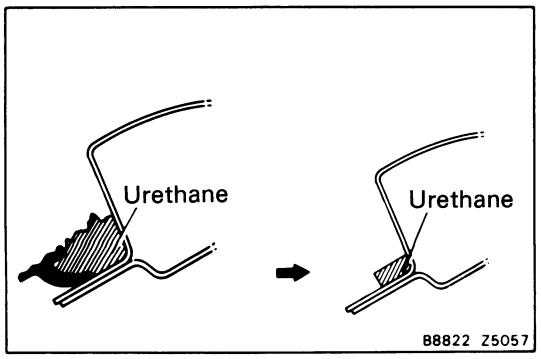

INSPECTION AND CLEANING

1. CLEAN AND SHAPE CONTACT SURFACE OF BODY

(a) Remove any dam remaining on the body.

(b) Cut out any rough areas with a knife.

NOTE: Leave as much urethane layer on the body as possible.

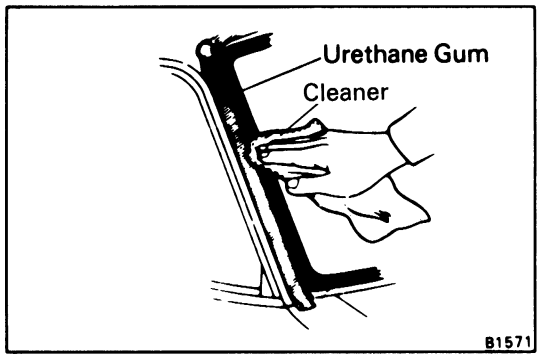

(c) Clean the cutting surface of the urethane gum with a piece of cloth saturated in cleaner.

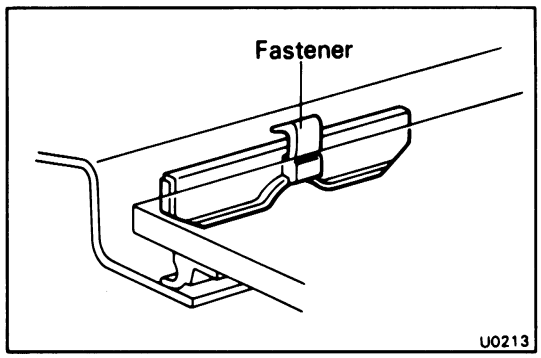

2. IF FASTENERS ARE DAMAGED

(a) Remove any damaged fastener.

(b) Cut off the old adhesive around the fastener installation area.

(c) Install a new fastener.

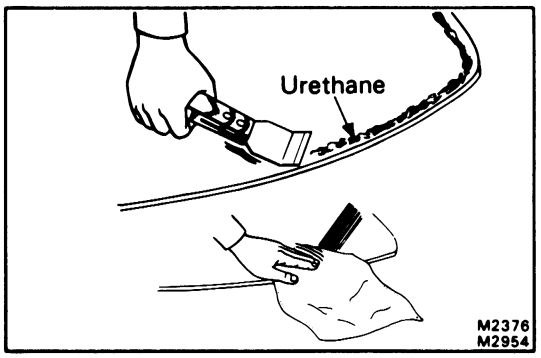

3. CLEAN REMOVED GLASS BEFORE INSTALLATION

(a) Using a scraper, remove the urethane gum sticking to the glass.

(b) Clean the glass with cleaner.

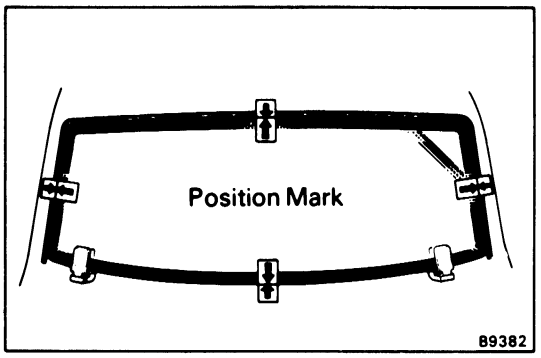

4. POSITION GLASS

(a) Place glass in the correct position.

(b) Check that all contacting parts of the glass rim are perfectly even and do not make contact with the fasteners.

(c) Make reference marks between the glass and body.

(d) Remove the glass.

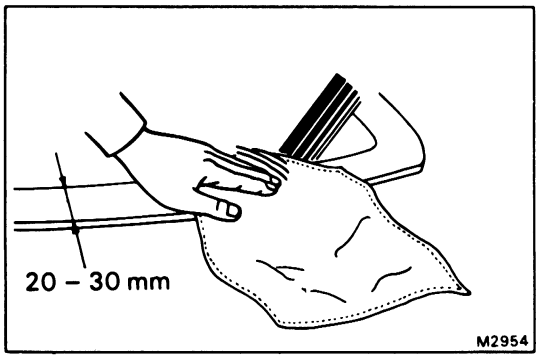

5. CLEAN CONTACT SURFACE OF GLASS

Using cleaner, clean the contact surface 20 – 30 mm (0.79 – 1.18 in.) wide around the entire glass rim.

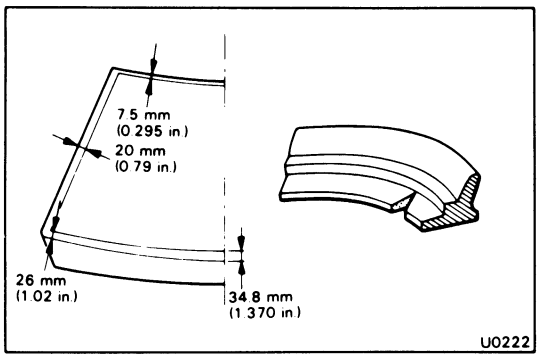

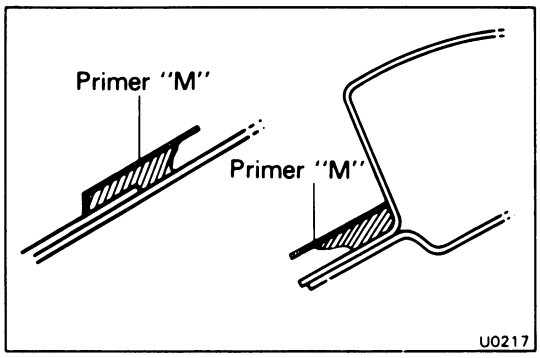

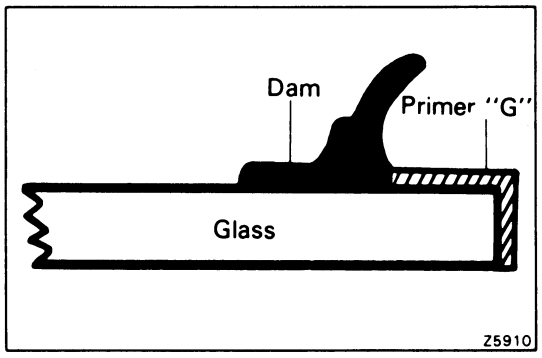

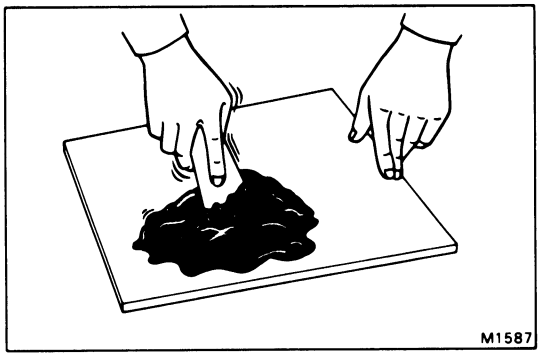

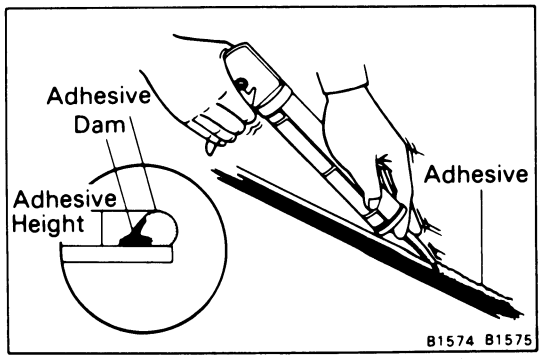

INSTALLATION OF WINDSHIELD

(See page BO-32)

1. INSTALL DAM

(a) Apply double-stick tape as shown.

(b) Place the dam on the double-stick tape.

NOTE: Cut a V-wedge into the corner folds of the dam.

CAUTION: Do not touch the glass face after cleaning.

2. COAT CONTACT SURFACE OF BODY WITH PRIMER "M"

Using a brush, coat the contact surface on the body with Primer "M".

CAUTION:

- **Let the Primer coating dry for 10 minutes or more. Make sure that the installation of the glass is finished within 2 hours.**
- **Use care not to leave any part of the contact surface uncoated or excessively coated, as Primer "M" and "G" serve to boost the adhesive power of the urethane to the glass or body.**
- **Do not keep any of the opened Primer "M" and "G" for later use.**

3. COAT CONTACT SURFACE OF GLASS WITH PRIMER "G"

(a) Using a brush or sponge, coat the edge of the glass and the contact surface with Primer "G".

(b) Before the primer dries, wipe any excess off with a clean cloth to avoid too thick a coat.

CAUTION: Be sure that installation of the glass is finished within 70 minutes.

4. MIX ADHESIVE COATING

CAUTION:

- **Be sure that installation of the glass is finished within the usable time. (See step 2 on page BO-30)**
- **The mixture should be made in 5 minutes or less.**

(a) Thoroughly clean the glass plate and putty spatula with cleaner.

(b) Using a putty spatula, thoroughly mix the main 500g (17.64 oz.) and hardening agents 75g (2.65 oz.) on a glass plate or like object.

5. APPLY ADHESIVE

(a) Cut off the tip of the cartridge nozzle, making a hole 5 mm (0.20 in.) in diameter. Fill the cartridge with adhesive.

(b) Load the cartridge into the sealer gun.

(c) Coat the glass with adhesive on all contact surfaces along the ridge.

Adhesive thickness:

If there is adhesive on body
3.5 – 5.0 mm (0.138 – 0.197 in.)

If there is no adhesive on body
8 – 10 mm (0.31 – 0.39 in.)

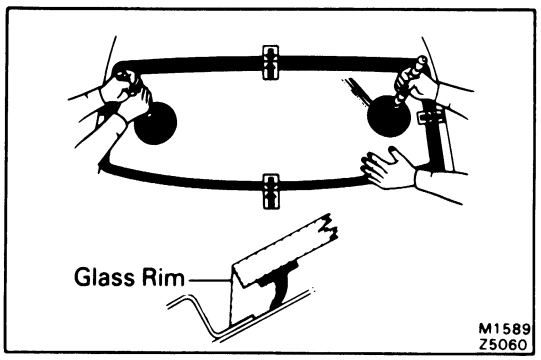

6. INSTALL GLASS

(a) Position the glass so that reference marks are lined up, and press in gently along the rim.

(b) Using a spatula, apply adhesive to the glass rim.

(c) Use a spatula to remove any excess or protruding adhesive.

(d) Fasten the glass securely until the adhesive sets.

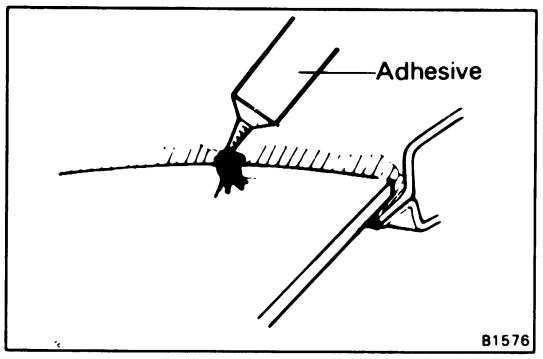

7. INSPECT FOR LEAKS AND REPAIR

(a) Perform a leak test after the hardening time has elapsed.

(b) Seal any leak with auto glass sealer.

Part No. 08833-00030 or equivalent

CAUTION: Wait at least twice the hardening time before driving the car.

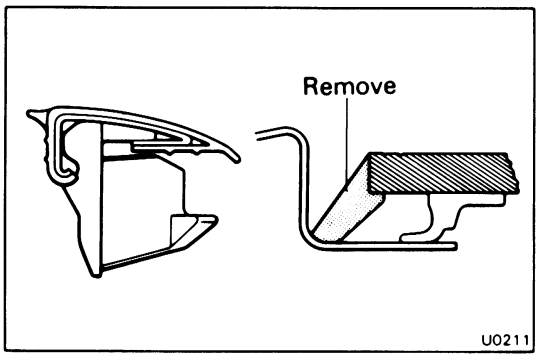

8. INSTALL UPPER MOULDING

(a) Install the clips into the moulding.
When installing the moulding, be sure that the clips and fasteners on the body side do not make contact.

(b) Using a knife, remove the adhesive around the installation area of the clips.

(c) Apply adhesive to the installation area of the clips.

NOTE: Loosely install the clip and confirm that the clip arm is not protruding above the surface.

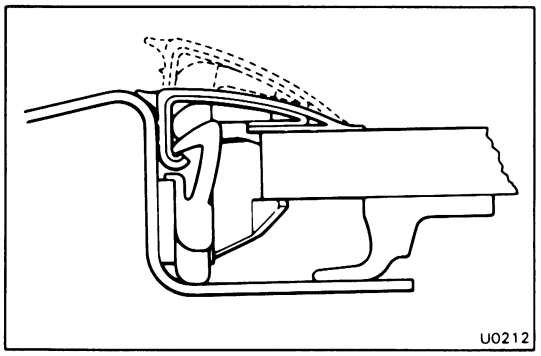

(d) Fit on the upper moulding, and tap the fasteners on by hand.

9. INSTALL FOLLOWING PARTS:

(a) Wiper arms

(b) Heater air duct screens

(c) Hood

(d) Inner rear view mirror

(e) Sun visors and holders

(f) Assist grip (w/ T-bar roof)

(g) Front pillar garnish

(h) Front roof bracket cover (w/ T-bar roof)

10. INSTALL AND ADJUST HOOD (See page BO-3)

CAUTION: Wait at least twice the setting time before driving the car.

QUARTER WINDOW GLASS

PREPARE ITEMS LISTED

Part name and part No.	Contents of set
Butyl tape set (08850-00065)	Butyl tape 9 mm dia. x 2,500 mm (0.35 x 98.43 in.) Primer 5 cc (0.17 fl.oz.) Sponge (for applying Primer) Piano wire 1 mm dia. x 600 mm (0.04 x 23.62 in.) (for slicing off glass)
Materials required	Cleaner (for cleaning adhering surface)

COMPONENTS

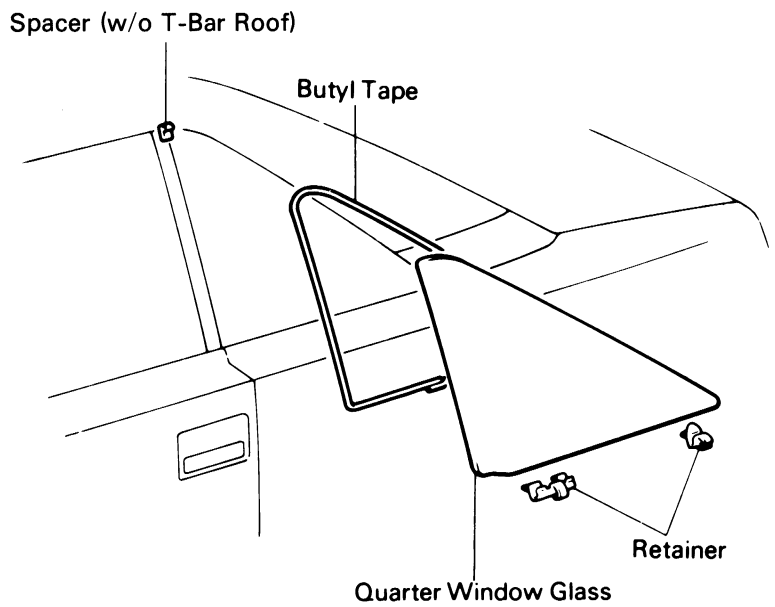

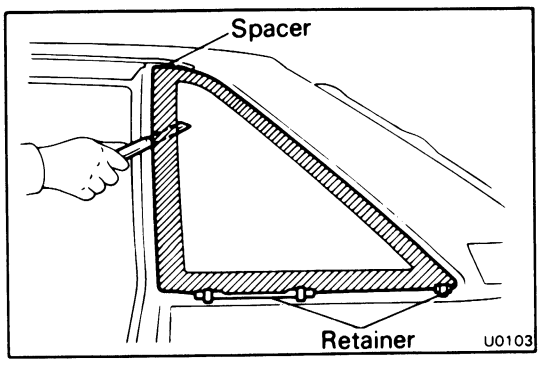

REMOVAL OF QUARTER WINDOW GLASS

1. **REMOVE QUARTER WINDOW MOULDING (See page BO-22)**
2. **REMOVE QUARTER WINDOW GLASS**
   (a) Using a knife, cut loose the adhesive.
   (b) Remove the glass.
3. **REMOVE BELT MOULDING RETAINERS AND SPACER**

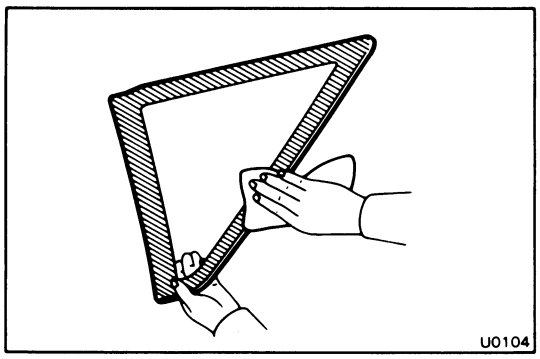

INSTALLATION OF QUARTER WINDOW GLASS

(See page BO-37)

1. CLEAN BODY OR GLASS

Wipe off any adhesive left on the body or glass with cleaner.

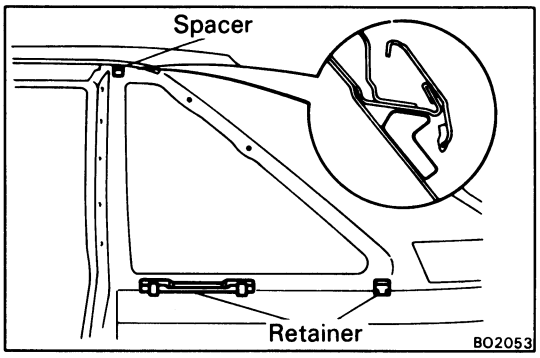

2. INSTALL BELT MOULDING RETAINERS AND SPACER

(a) From inside the vehicle, install the retainer with two nuts.

(b) Tape both sides of the spacer so that it is flush against the roof drip.

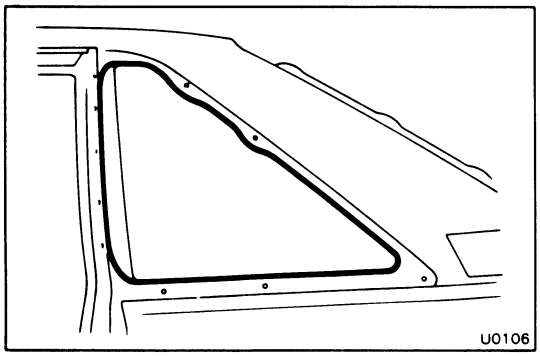

3. COAT CONTACT SURFACE OF GLASS WITH PRIMER

(a) Sponge a 20 – 30 mm (0.79 – 1.18 in.) band of primer around the entire edge of the glass.

(b) Allow primer to dry of 10 minutes.

4. APPLY BUTYL TAPE TO BODY

Apply butyl tape around window frame on body where glass is to be adhered.

NOTE: Apply butyl tape continuously, overlapping the ends so that it provides a watertight seal around glass.

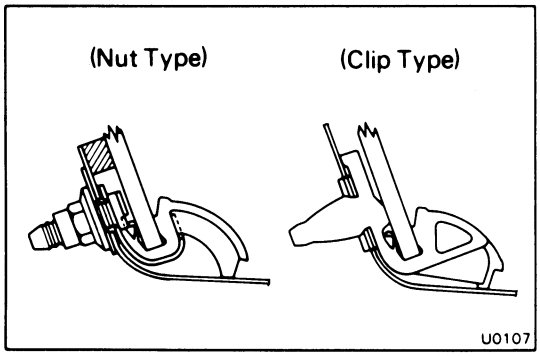

5. INSTALL GLASS

Install retainer into ceramic notch on glass, and install glass to body frame.

6. INSTALL QUARTER WINDOW MOULDING

(See page BO-24)

REAR WINDOW GLASS

COMPONENTS

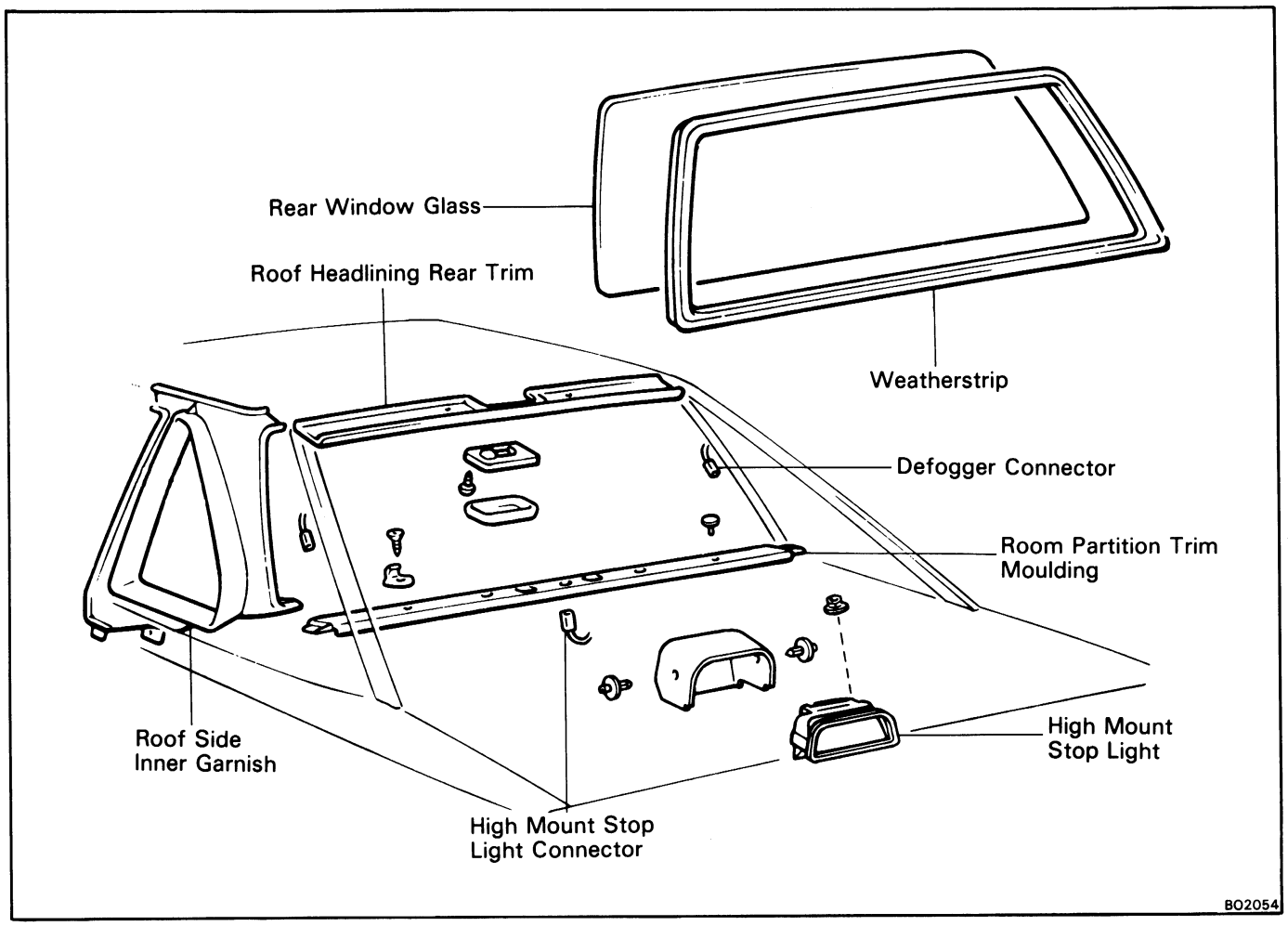

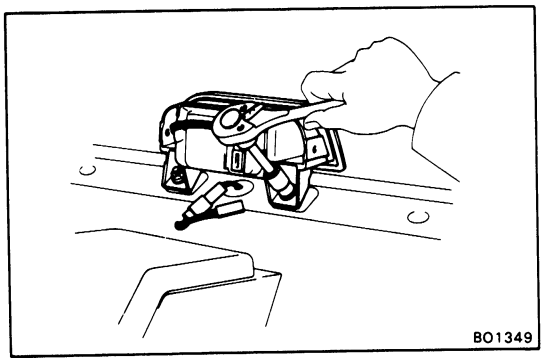

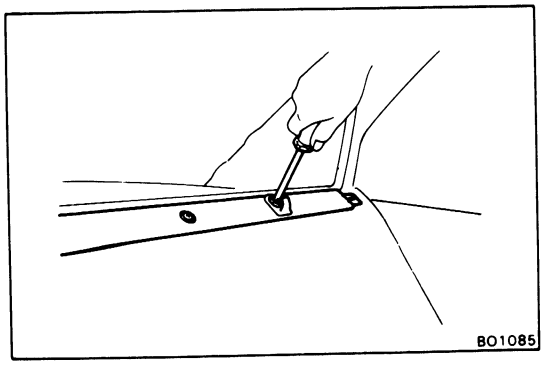

REMOVAL OF REAR WINDOW GLASS

1. **REMOVE HIGH MOUNT STOP LIGHT WITH BRACKET**
   (a) Push on the center of the clip with a thin object to remove it.
   (b) Remove the cover.
   (c) Disconnect the connector.
   (d) Remove the high mount stop light with the bracket.
2. **REMOVE ROOF SIDE INNER GARNISH**
   (See page BO-23)
3. **REMOVE ROOM PARTITION TRIM MOULDING AND COAT HOOK**
4. **REMOVE ROOM LIGHT**
5. **DISCONNECT REAR WINDOW DEFOGGER CONNECTOR**

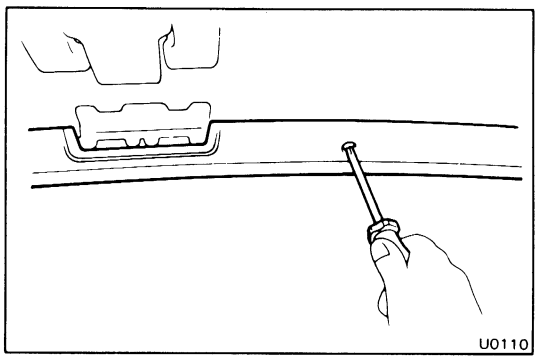

6. REMOVE ROOF HEADLINING REAR TRIM

7. REMOVE REAR WINDOW UPPER MOULDING
(See page BO-29)

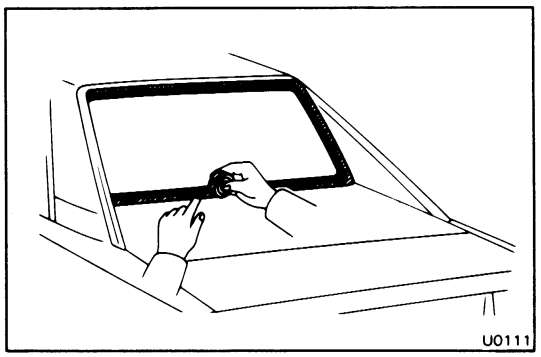

8. APPLY ADHESIVE TAPE TO PROTECT BODY

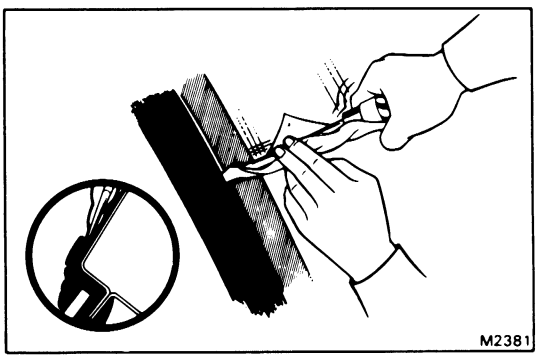

9. REMOVE GLASS

If reusing weatherstrip:

(a) Working from outside the vehicle with a screwdriver, loosen the weatherstrip lip from the body.

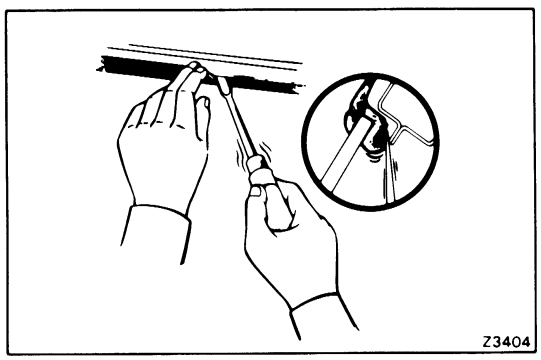

(b) Force the weatherstrip lip from the interior to the outside body flange. Pull the glass outwards and remove it with the weatherstrip.

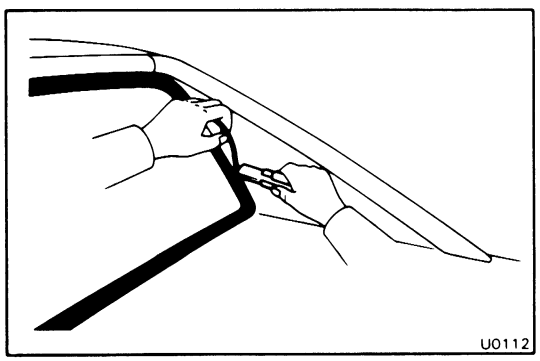

If not reusing weatherstrip:

(a) From the outside, cut off the weatherstrip lip with a knife.

(b) From the vehicle interior, push on the glass with an even force.

(c) Pull off the weatherstrip from the body.

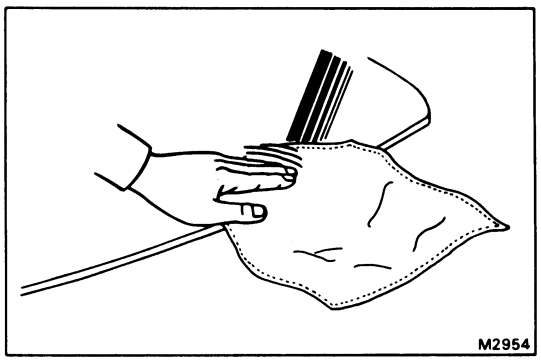

INSTALLATION OF REAR WINDOW GLASS

(See page BO-39)

1. CLEAN BODY AND GLASS

Wipe off any adhesive left on the body or glass with cleaner.

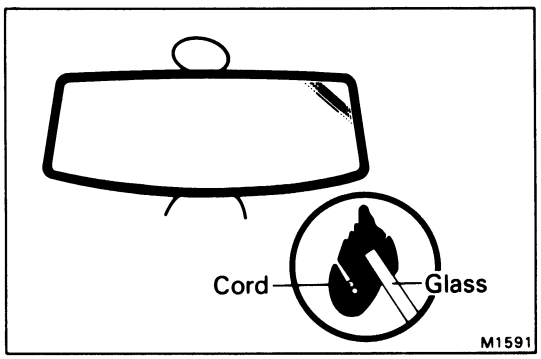

2. INSTALL WEATHERSTRIP ON GLASS

(a) Attach the weatherstrip to the glass.

CAUTION: If the weatherstrip has hardened, it may develop water leaks. Use a new one if possible.

(b) Apply a working cord along the weatherstrip groove as shown.

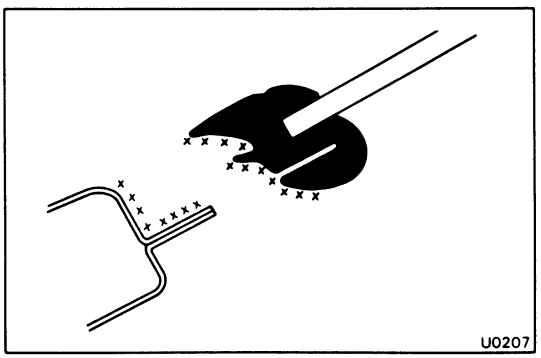

3. INSTALL GLASS

(a) Apply soapy water to the contact face of the weatherstrip lip and to the body flange.

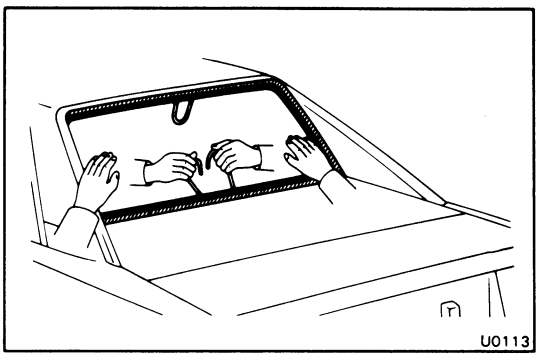

NOTE: Begin installation from the lower center of the glass.

(b) Hold the glass in position on the body.

(c) Install the glass by pulling the string from the interior, while pushing on the outside of the weatherstrip with your open hand.

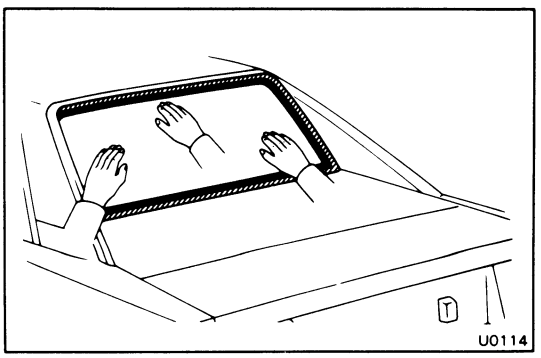

(d) To snug the glass in place, tap from the outside with your open hand.

4. **INSPECT FOR LEAKS AND REPAIR**
   (a) Perform a leak test.
   (b) Seal any leak with auto glass sealer.
   Part No. 08833-00030 or equivalent
5. **INSTALL REAR WINDOW UPPER MOULDING (See page BO-30)**
6. **INSTALL ROOF HEADLINING REAR TRIM**
7. **CONNECT REAR WINDOW DEFOGGER CONNECTOR**
8. **INSTALL ROOM LIGHT**
9. **INSTALL ROOM PARTITION TRIM MOULDING AND COAT HOOK**
10. **INSTALL ROOF SIDE INNER GARNISH (See page BO-25)**
11. **INSTALL HIGH MOUNT STOP LIGHT**

T-BAR ROOF

COMPONENTS

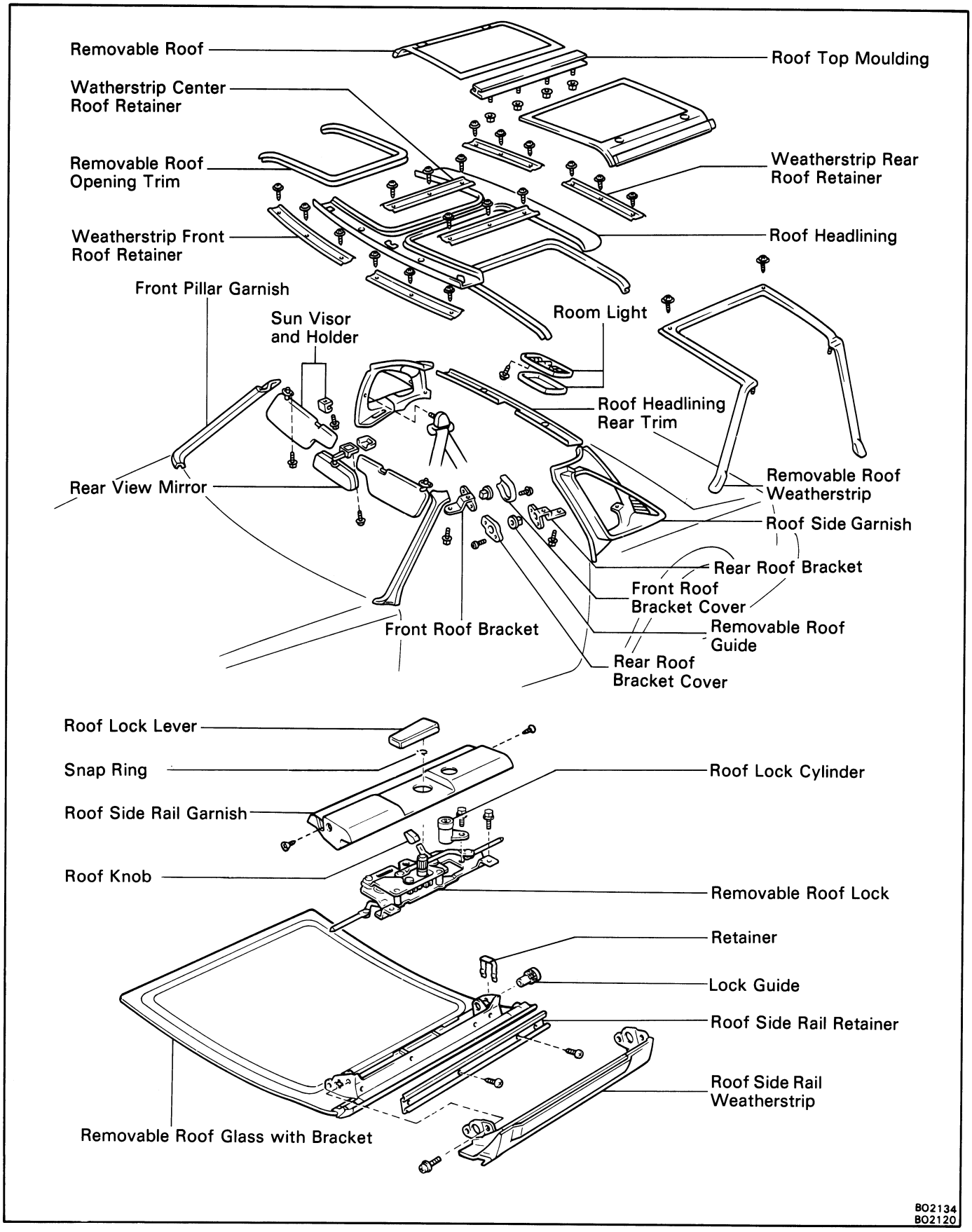

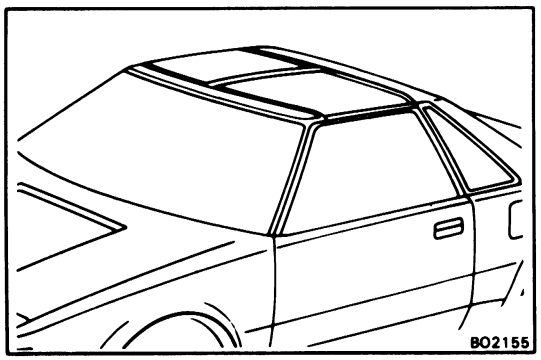

ON-VEHICLE INSPECTION

(a) With the removable roof installed, check for water leakage.

(b) Check for a difference in level between the removable roof glass and roof panel.

Level:

Front side	**$2.4^{+2.0}_{-1.0}$ mm ($0.094^{+0.079}_{-0.039}$ in.)**
Rear side	**$1.7^{+2.0}_{-1.0}$ mm ($0.067^{+0.079}_{-0.039}$ in.)**
Side direction	**0 ± 2.0 mm (0 ± 0.07 in.)**

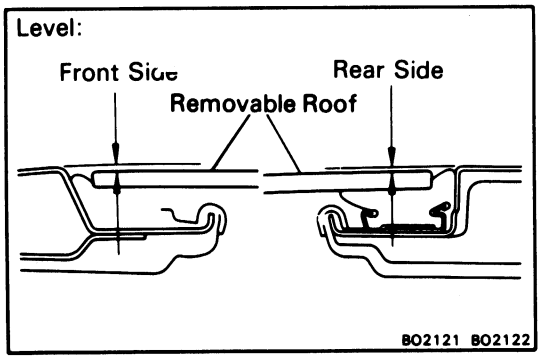

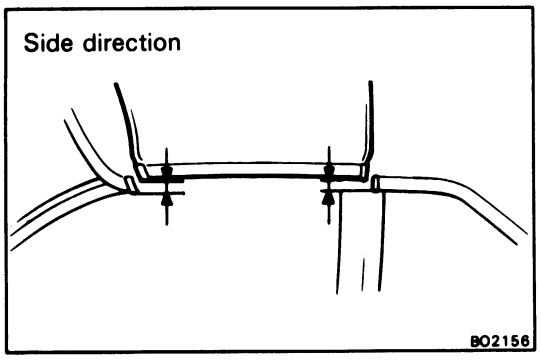

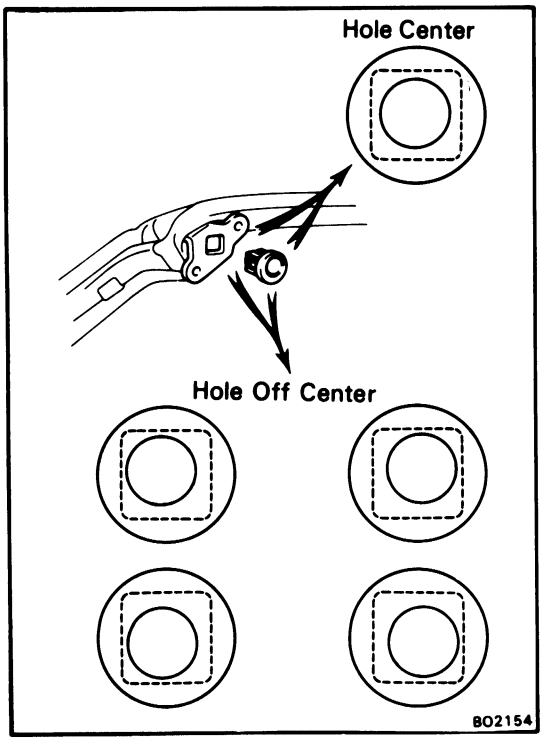

ADJUSTMENT OF REMOVABLE ROOF

1. **REMOVE REMOVABLE ROOF GUIDE**
   (See page BO-45)

2. **SELECT REMOVABLE ROOF GUIDE**

   NOTE: There are two types of roof guides, one with the hole centered, and the other with its hole 1 mm (0.039 in.) off center. Depending on the installation position in which the roof guide with the off center hole is installed, the removable roof can be adjusted in four directions.
   Set roof guide installation position so that the level difference between the roof panel and removable roof is within specifications.

3. **INSTALL REMOVABLE ROOF GUIDE**
   (See page BO-46)

T-Bar Roof Bracket

REMOVAL OF T-BAR ROOF BRACKET

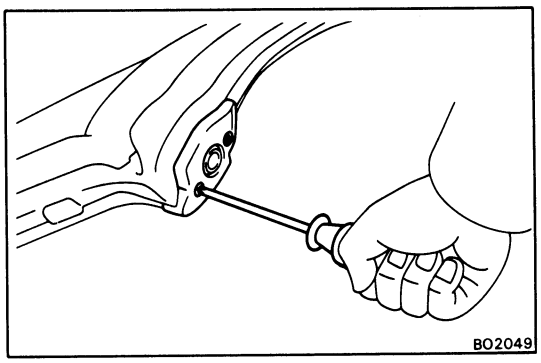

1. REMOVE FRONT ROOF BRACKET COVER

Remove the two screws and front roof bracket cover.

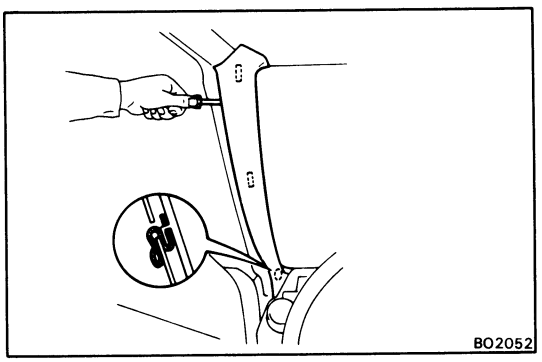

2. REMOVE FRONT PILLAR GARNISH

(a) Remove the two screws and assist grip.

(b) Using a screwdriver tip before using.

NOTE: Tape the screwdriver tip before using.

(c) Pull the garnish upward to remove it.

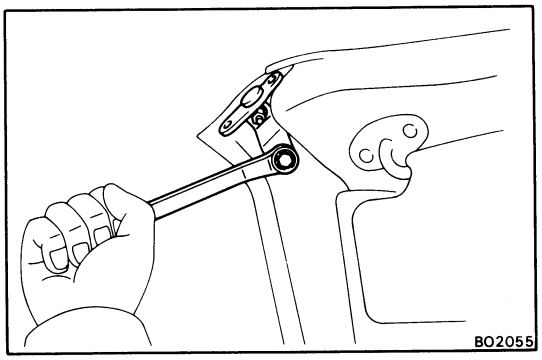

3. REMOVE FRONT ROOF BRACKET

(a) Remove the bolt, nut and bracket.

(b) Remove the removable roof guide from the bracket.

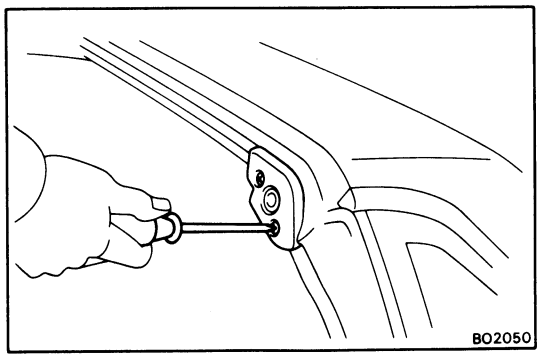

4. REMOVE REAR ROOF BRACKET COVER

Remove the two screws and rear roof bracket cover.

5. REMOVE SEAT BELT SHOULDER ANCHOR BOLT

6. REMOVE ROOF SIDE GARNISH
(See page BO-23)

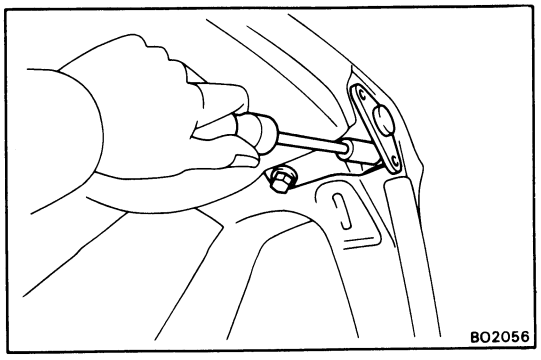

7. REMOVE REAR ROOF BRACKET

(a) Remove the bolt, nut and bracket.

(b) Remove the removable roof guide from the bracket.

INSTALLATION OF T-BAR ROOF BRACKET

1. **INSTALL T-BAR ROOF PARTS FOLLOWING REMOVAL SEQUENCE**

   Seat belt shoulder anchor belt.

   Torque: 440 kg-cm (32 ft-lb, 43 N·m)

2. **ADJUST REMOVABLE ROOF**

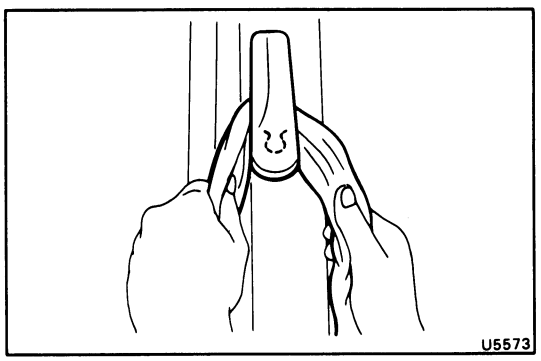

Removable Roof

DISASSEMBLY OF REMOVABLE ROOF

1. **REMOVE ROOF LOCK LEVER**

   Pull off the snap ring with a cloth and remove the roof lock lever.

2. **REMOVE ROOF KNOB**

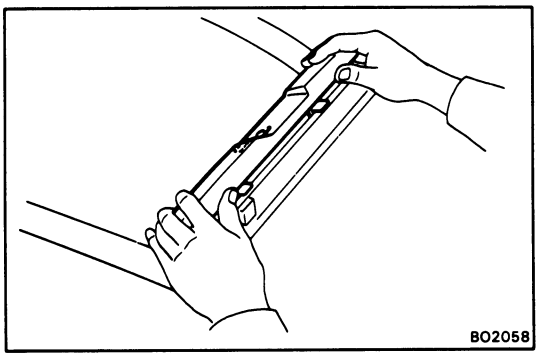

3. **REMOVE ROOF SIDE RAIL GARNISH**

   (a) Remove the two screws.

   (b) Insert the screwdriver between the garnish and roof glass to pry it loose.

   NOTE: Tape the screwdriver tip before use.

   (c) Remove the garnish from the roof lock claw as shown.

4. **REMOVE ROOF LOCK CYLINDER**

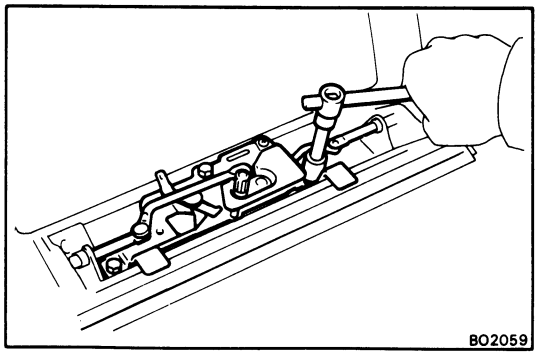

5. **REMOVE REMOVABLE ROOF LOCK**

   Remove the three bolts and roof lock.

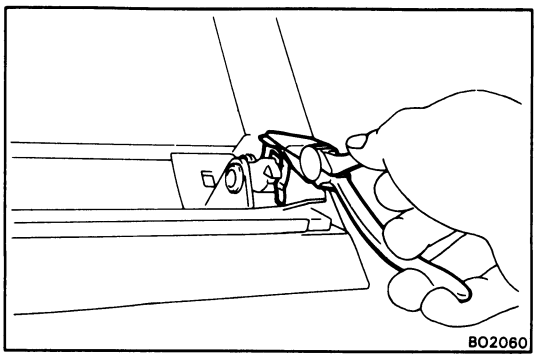

6. **REMOVABLE ROOF LOCK GUIDE**

   Remove the retainer and lock guide.

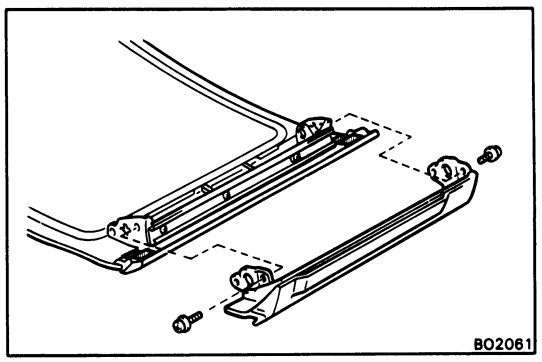

7. REMOVE ROOF SIDE RAIL WEATHERSTRIP

(a) Remove the two screws.

(b) Tear off the both double-stick tapes, remove the roof side rail weatherstrip.

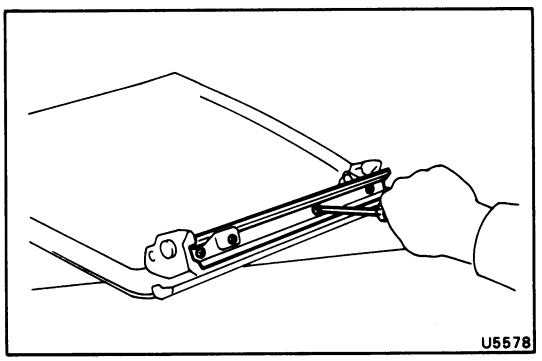

8. REMOVE ROOF SIDE RAIL RETAINER AND HOLDER

Remove the four screws and roof side rail retainer.

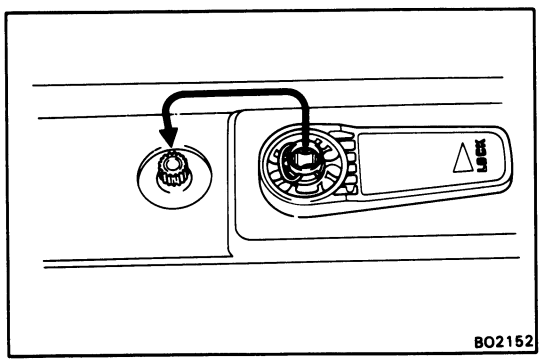

ASSEMBLY OF REMOVABLE ROOF

1. ASSEMBLE REMOVABLE ROOF PARTS FOLLOWING DISASSEMBLY SEQUENCE IN REVERSE

NOTE: If replace the removable roof glass with bracket, refer to replacement of removal roof or removable roof glass with bracket. (See page BO-44)
When reinstall the roof lock lever and snap ring, install the snap ring to roof lock lever. Then install the those parts to the shaft.

2. ADJUST REMOVABLE ROOF
(See page BO-44)

Roof Top Moulding

REMOVAL OF ROOF TOP MOULDING

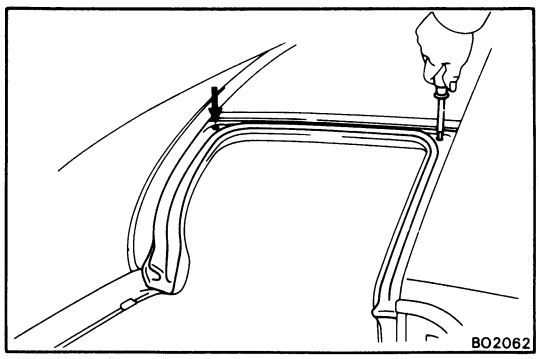

1. DISCONNECT REMOVABLE ROOF WEATHERSTRIPS

(a) Remove the four screws from the both side weatherstrips.

(b) Disconnect the weatherstrips from the retainer.

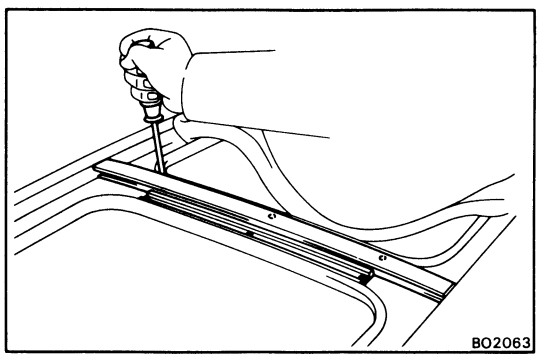

2. REMOVE TWO WEATHERSTRIP CENTER ROOF RETAINERS

Remove the six screws and two center roof retainers.

3. REMOVE FOLLOWING PARTS:

(a) Sun visors and holders

(b) Rear view mirror

(c) Room light

(d) Front and rear roof bracket cover

(e) Assist grip

(f) Front pillar garnish

(g) Removable roof opening trim

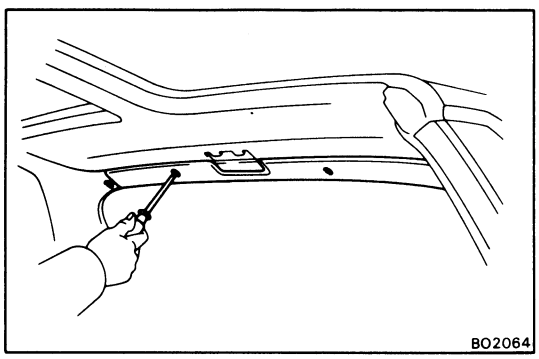

4. REMOVE ROOF HEADLINING REAR TRIM

Remove the two clips and two screws and rear trim.

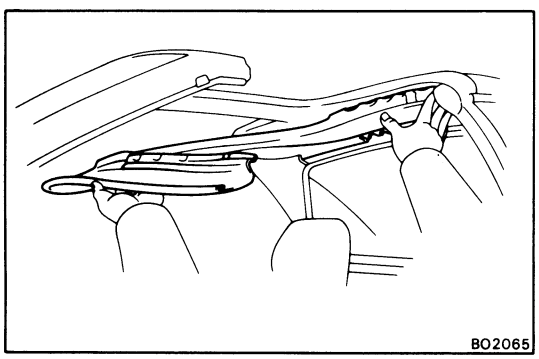

5. REMOVE ROOF HEADLINING FROM BODY

(a) Down the front side of roof headlining with the clip.

(b) Slide the roof headlining forward.

(c) Remove the roof headlining.

NOTE: Do not damage the roof headlining.

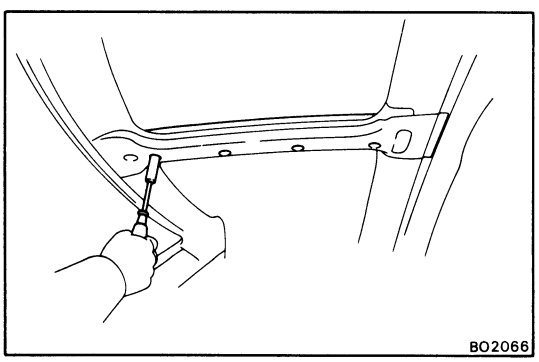

6. REMOVE ROOF TOP MOULDING FROM ROOF PANEL

Remove the four nuts and roof top moulding.

INSTALLATION OF ROOF TOP MOULDING

1. INSTALL ROOF TOP MOULDING TO ROOF PANEL

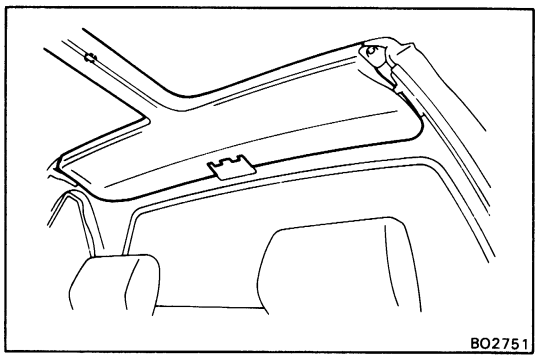

2. INSTALL ROOF HEADLINING TO BODY

Install the roof headlining with clip to the body by tapping.

3. INSTALL ROOF HEADLINING REAR TRIM

4. INSTALL FOLLOWING PARTS:

(a) Front pillar garnish
(b) Assist grip
(c) Front and rear roof bracket cover
(d) Room light
(e) Rear view mirror
(f) Sun visors and holders
(g) Removable roof opening trim

5. INSTALL TWO WEATHERSTRIPS CENTER ROOF RETAINERS

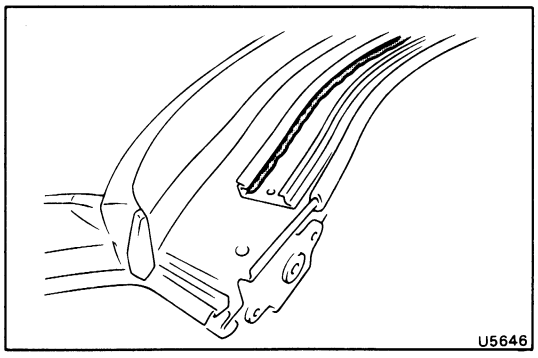

6. INSTALL TWO WEATHERSTRIPS

(a) Using cleaner, clean the weatherstrip retainers.

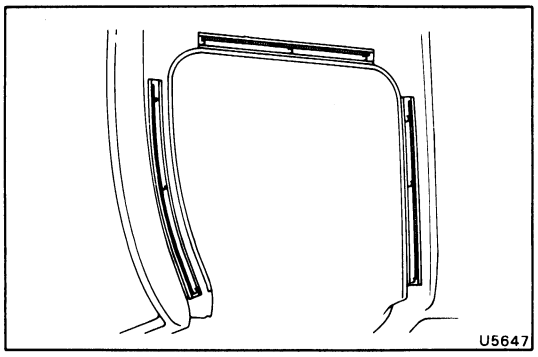

(b) Apply adhesive to the retainers as shown.

Part No. 08833-00030 or equivalent

(c) Install the two weatherstrips with four screws.

SUN ROOF

COMPONENTS

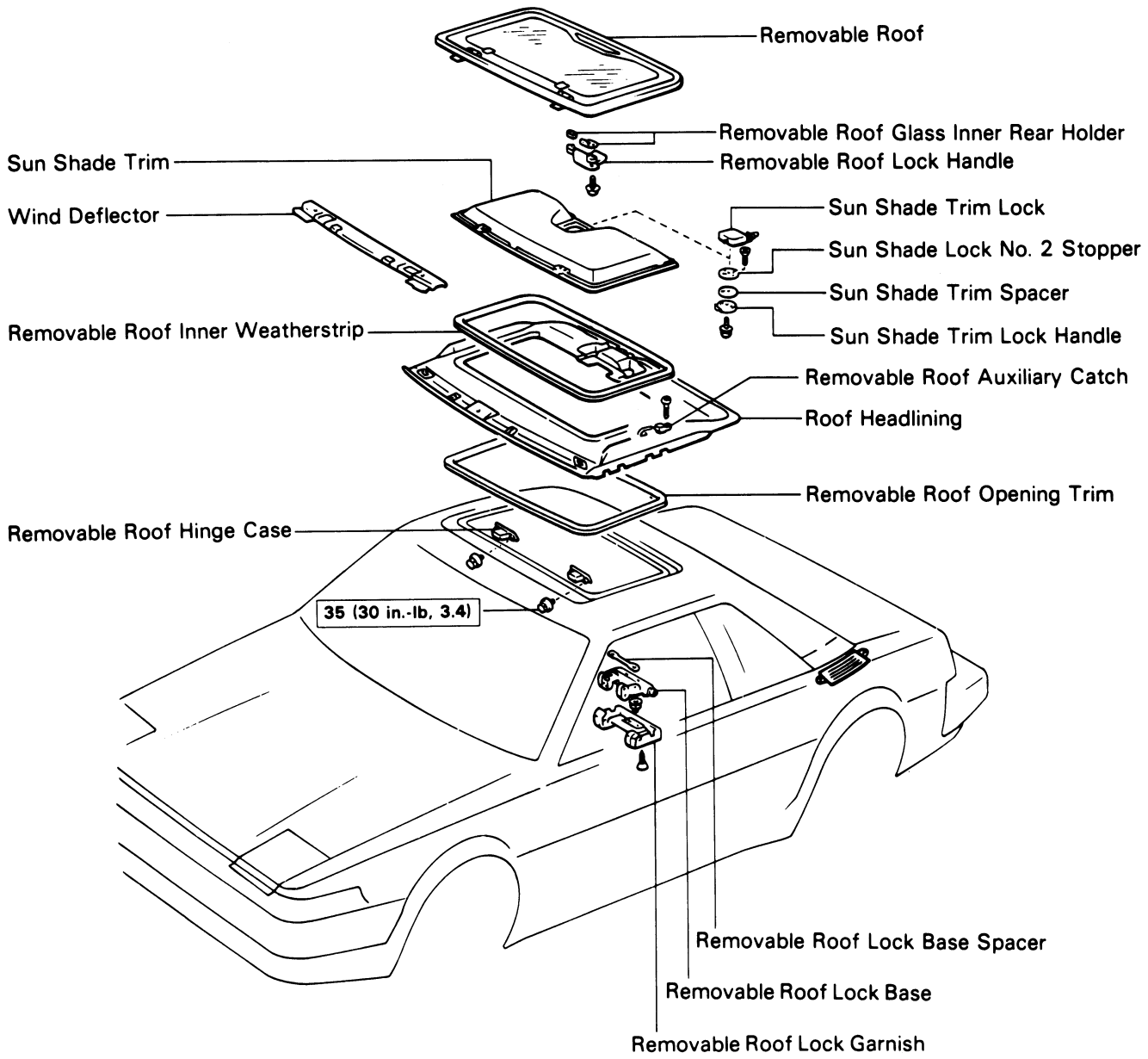

kg-cm (ft-lb, N·m) : Specified torque

BO0887

DISASSEMBLY OF SUN ROOF

(See page BO-50)

1. **REMOVE REMOVABLE ROOF WITH SUN SHADE**

2. **REMOVE REMOVABLE ROOF INNER WEATHERSTRIP**

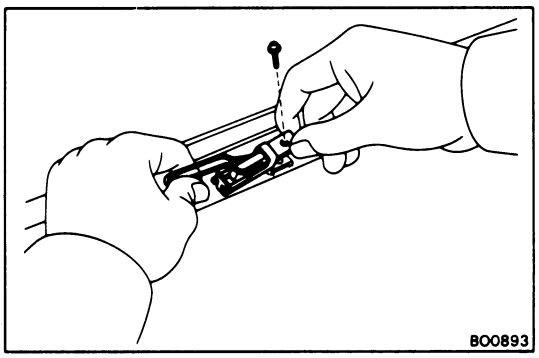

3. **REMOVE REMOVABLE ROOF AUXILIARY CATCH**

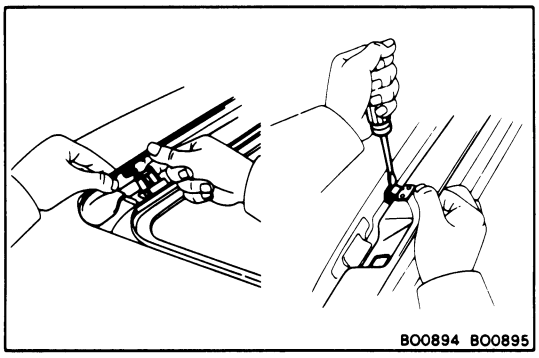

4. **REMOVE WIND DEFLECTOR**
   (a) Remove the two outside deflector clips on the left and right sides.
   (b) Remove the two inside deflector clips on the left and right sides, while prying with a screwdriver.

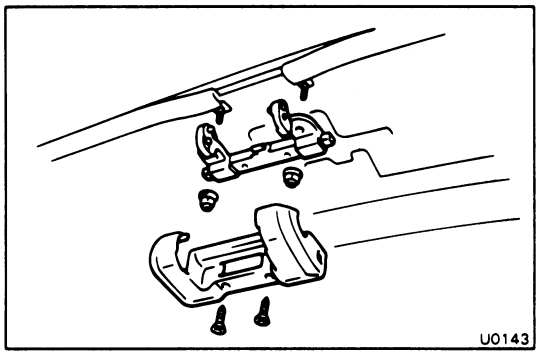

5. **REMOVE REMOVABLE ROOF LOCK BASE**
   (a) Remove the two screws and the garnish.
   (b) Remove the two nuts and the lock base.

6. **REMOVE REMOVABLE ROOF OPENING TRIM**

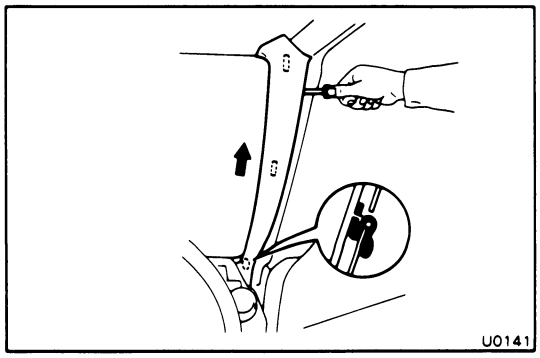

7. **REMOVE REMOVABLE ROOF HINGE CASE**
   (a) Remove the following parts:
   - Inner view mirror
   - Sun visors and holders
   - Assist grip

   (b) Pry out the clips of the front pillar garnish with a screwdriver and pull the garnish up to remove it.

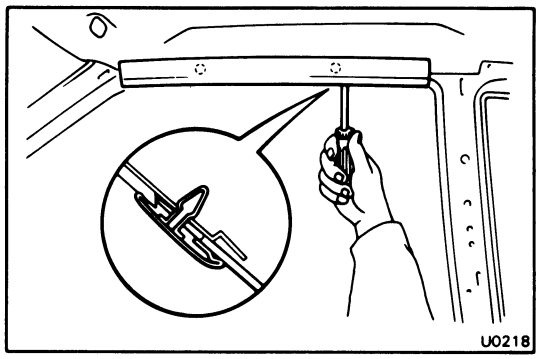

(c) Pry out the clips of the roof side rail garnish with a screwdriver.

(d) Drop the front end of the headlining.

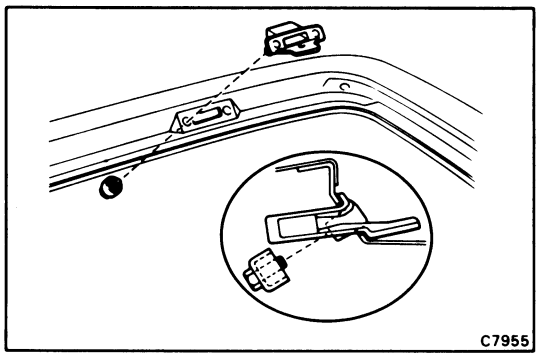

(e) Remove the two bolts and the hinge case.

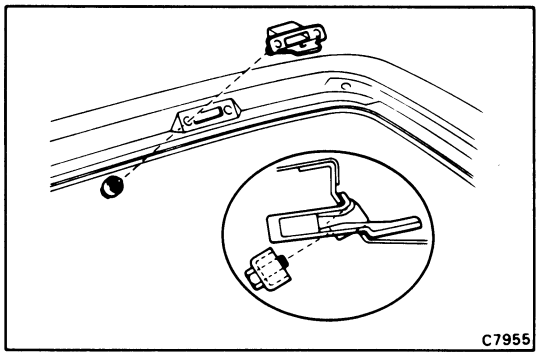

ASSEMBLY OF SUN ROOF

(See page BO-50)

1. **INSTALL REMOVABLE ROOF HINGE CASE**

   Torque: 35 kg-cm (30 in.-lb, 3.4 N·m)

   NOTE:
   - Make sure the seal is properly torqued.
   - If any part of the seal is damaged, replace the seal and case.

2. **INSTALL ROOF SIDE RAIL GARNISH**
3. **INSTALL FRONT PILLAR GARNISH**
4. **INSTALL FOLLOWING PARTS:**
   - Inner view mirror
   - Sun visors and holders
   - Assist grip
5. **INSTALL REMOVABLE ROOF OPENING TRIM**

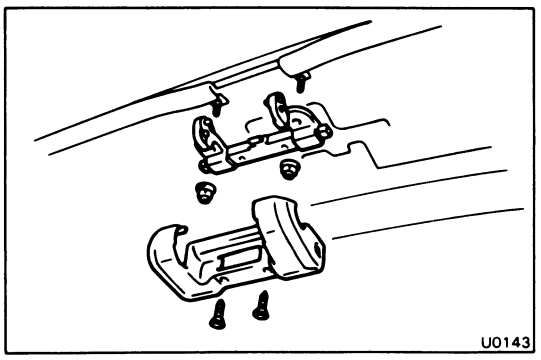

6. **INSTALL REMOVABLE ROOF LOCK BASE**
   (a) Install the lock base with the two nuts.
   (b) Install the garnish with the two screws.
7. **INSTALL WIND DEFLECTOR**

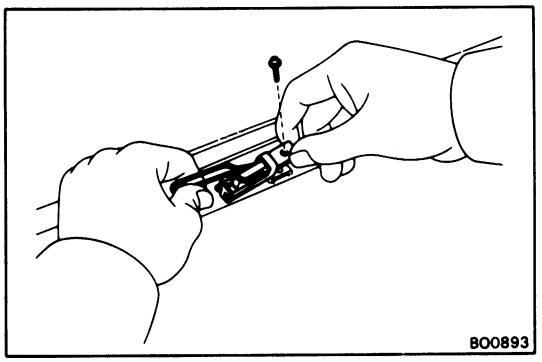

8. INSTALL REMOVABLE ROOF AUXILIARY CATCH

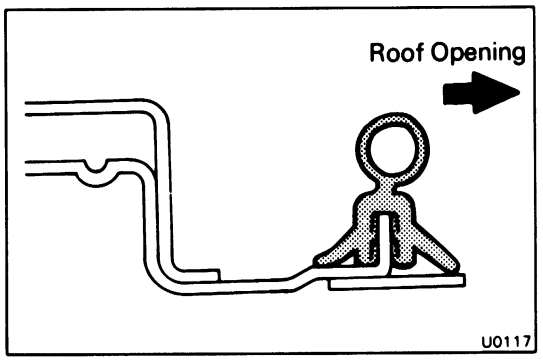

9. INSTALL REMOVABLE ROOF INNER WEATHERSTRIP

NOTE: Install the top of the weatherstrip so the top end enters the roof opening.

10. INSTALL REMOVABLE ROOF WITH SUN SHADE

INSTRUMENT PANEL

COMPONENTS

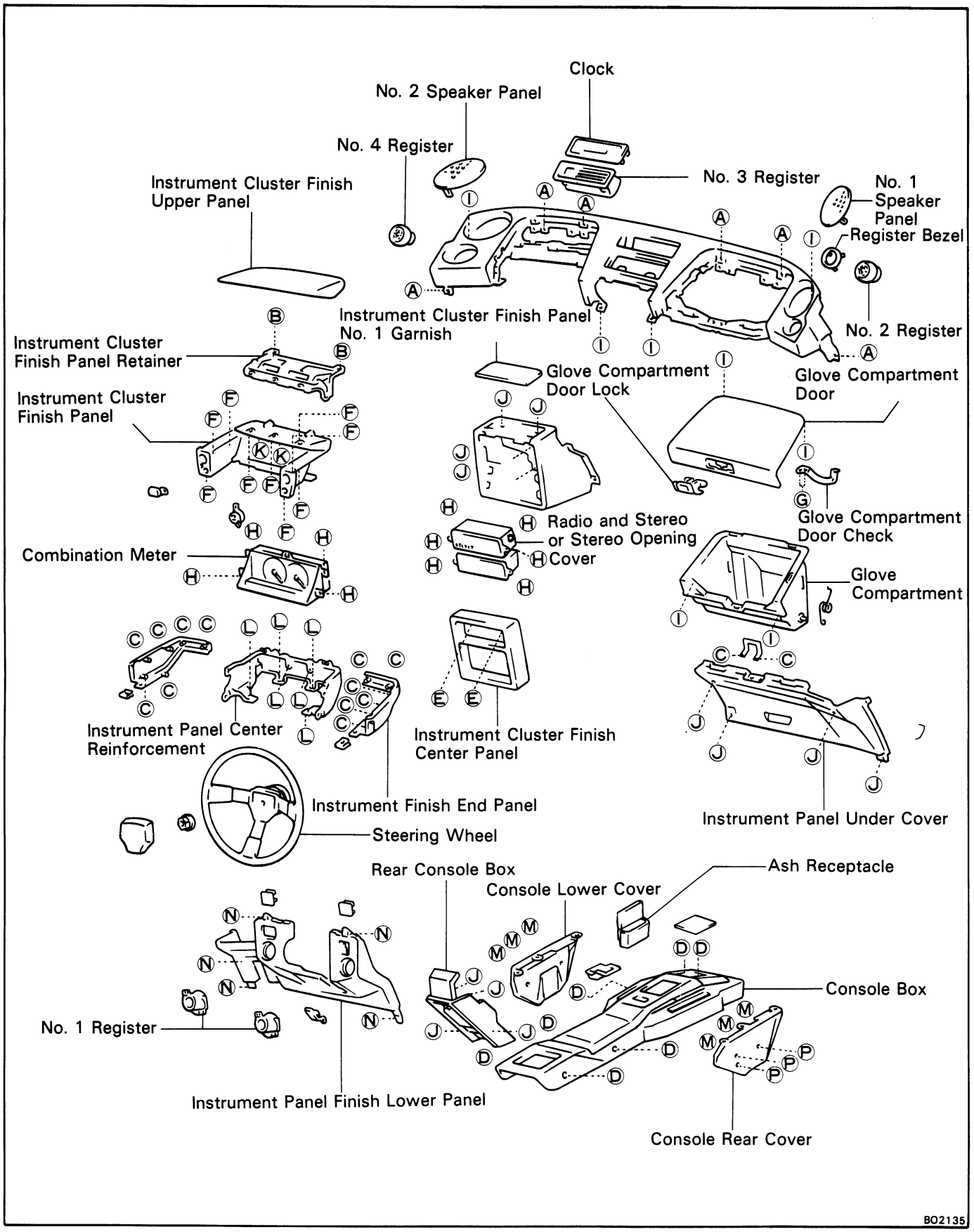

NOTE: Screw sizes are indicated by following the code use for removal and installation of the safety pad.

Code	Shape	Code	Shape	Code	Shape
A	ϕ 6 L=16	F	ϕ 5 L=12	K	ϕ 5.22 L=20
B	ϕ 6	G	ϕ 5 L=8	L	ϕ 6 L=16
C	ϕ 5.22 L=12	H	ϕ 5 L=18	M	ϕ 5.22 L=14
D	ϕ 5.22 L=14	I	ϕ 5.22 L=14	N	ϕ 5.22 L=16
E	ϕ 5.22 L=12	J	ϕ 5.22 L=16	P	ϕ 6 L=14

BO0892

REMOVAL OF INSTRUMENT PANEL

(See page BO-54)

1. **DISCONNECT BATTERY CABLE FROM NEGATIVE TERMINAL**

2. **REMOVE STEERING WHEEL**

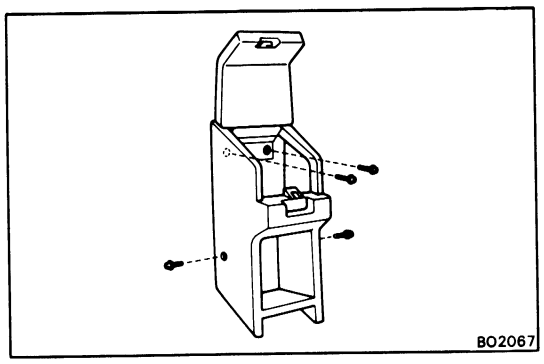

3. **REMOVE REAR CONSOLE BOX**

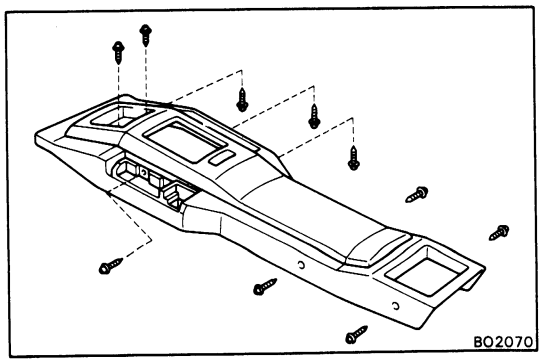

4. **REMOVE CONSOLE BOX**
   (a) Set the parking brake lever.
   (b) Remove the shift lever knob. (M/T only)
   (c) Remove the ash receptacle.
   (d) Remove the ten screws.
   (e) With the backside of the console raised, remove the console.
   (f) Disconnect the connectors and remove the console box.

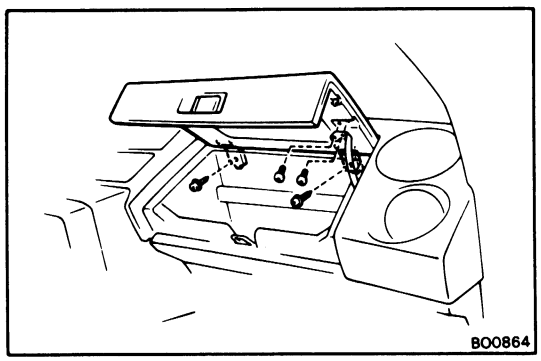

5. REMOVE GLOVE COMPARTMENT DOOR

(a) Remove the two door arm set screws.

(b) Remove the two door check set screws and the door.

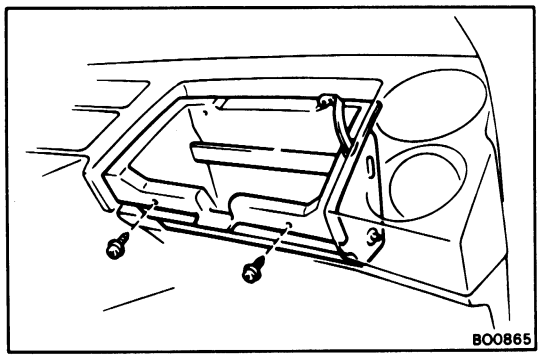

6. REMOVE GLOVE COMPARTMENT

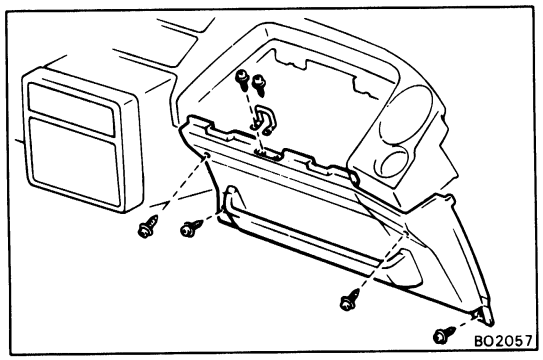

7. REMOVE INSTRUMENT PANEL UNDER COVER

(a) Remove the one screw from the scuff plate frontside.

(b) Remove the cowl side trim board.

(c) Remove the door lock striker.

(d) Remove the four screws and the under cover.

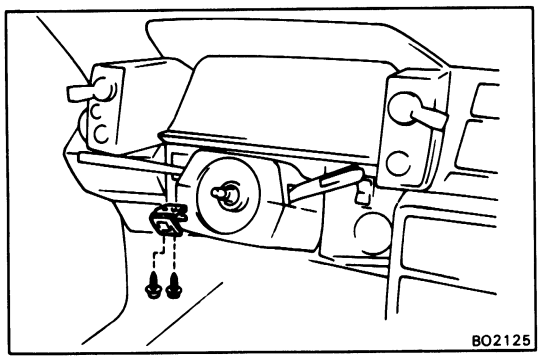

8. REMOVE INSTRUMENT PANEL FINISH LOWER PANEL

(a) Remove the one screw from the scuff plate frontside.

(b) Remove the cowl side trim board.

(c) Remove the food lock lever.

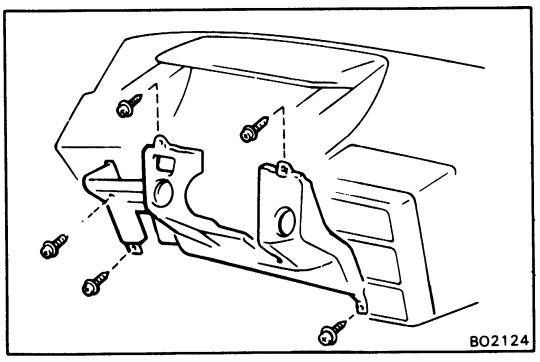

(d) Remove the five screws and place in front of you.

(e) Disconnect the connectors and remove the panel.

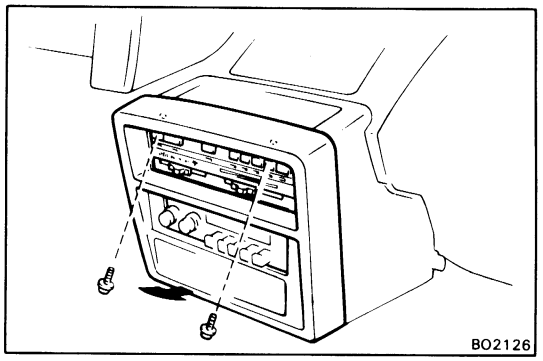

9. REMOVE INSTRUMENT CLUSTER FINISH CENTER PANEL

(a) Remove the two screws.

(b) Remove the panel from the lower side.

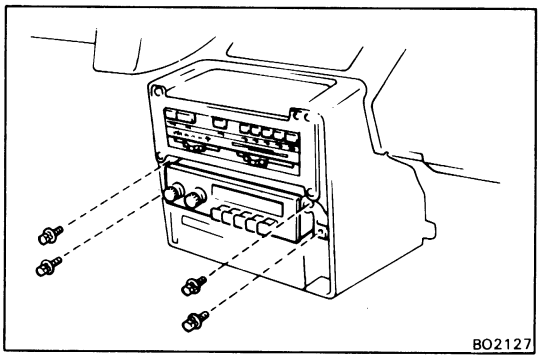

10. REMOVE RADIO TUNER FINISH PANEL

(a) Remove the four screws.

(b) Disconnect the connector and radio antenna cable, and remove the radio.

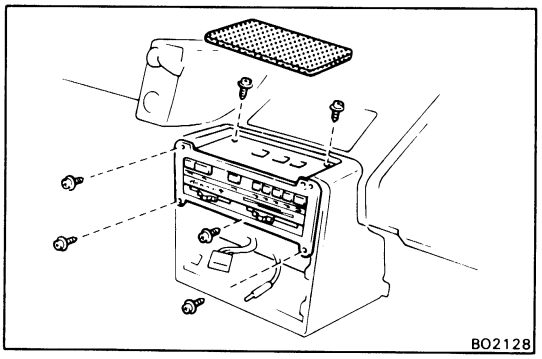

(c) Remove the instrument cluster finish panel.

(d) Remove the six screws and the radio tuner finish panel.

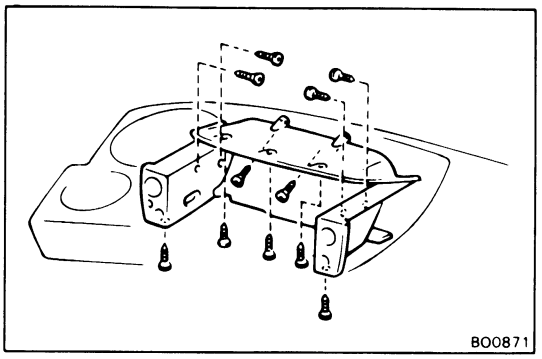

11. REMOVE INSTRUMENT CLUSTER FINISH UPPER PANEL

(a) Remove the eleven screws.

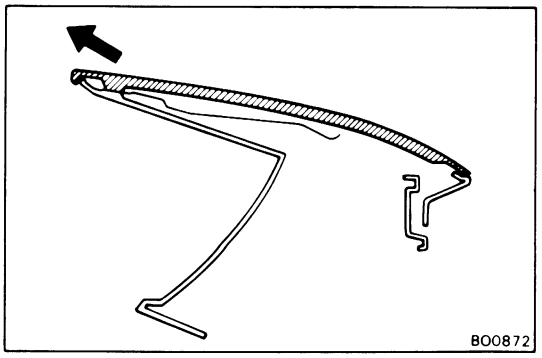

(b) Remove the panel by pulling in diagonally upward.

(c) Disconnect the connector (with Auto A/C).

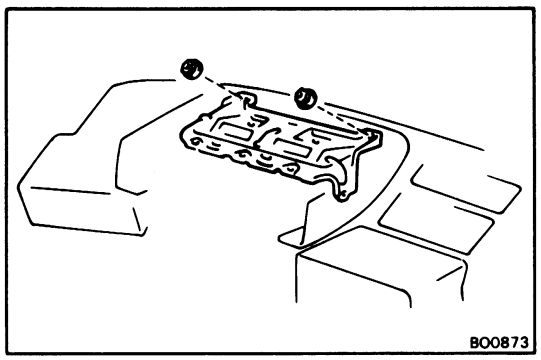

12. REMOVE INSTRUMENT CLUSTER FINISH PANEL RETAINER

13. REMOVE INSTRUMENT CLUSTER FINISH PANEL

Pull the panel in front of you, disconnect the connector and remove it.

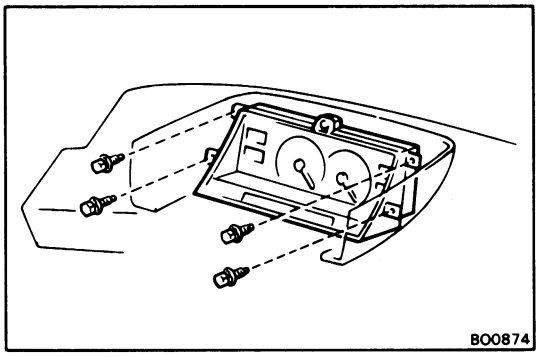

14. REMOVE COMBINATION METER

(a) Remove the four screws.

(b) Disconnect the speedometer cable.

(c) Disconnect the connectors and remove the meter.

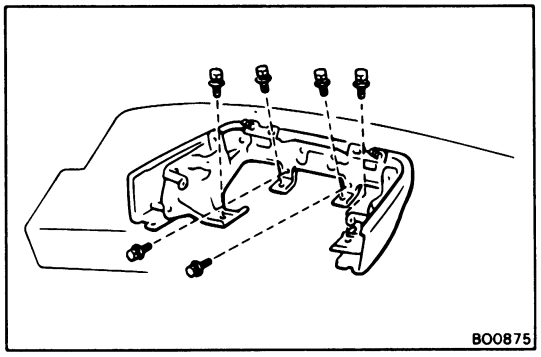

15. REMOVE INSTRUMENT PANEL CENTER REINFORCEMENT WITH INSTRUMENT PANEL FINISH END

(a) Disconnect the wiring harness clamps.

(b) Remove the six bolts and the reinforcement with the instrument panel.

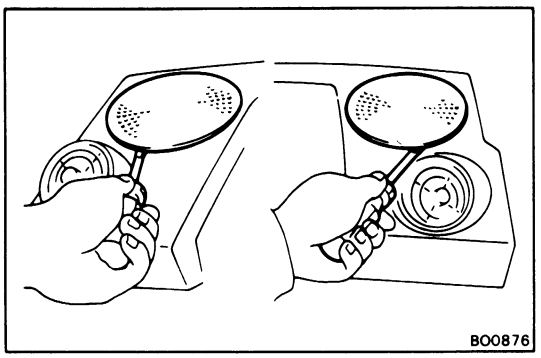

16. REMOVE SPEAKER PANEL NO. 1 AND NO. 2

Pry up the speaker panel No. 1 and No. 2.

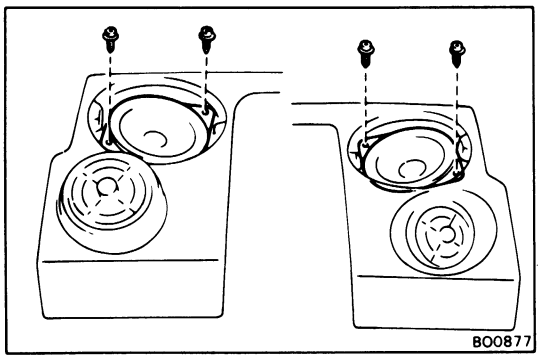

17. REMOVE BOTH SIDE SPEAKERS

(a) Remove the four screws.

(b) Pull out the speaker, disconnect the connector and remove the speakers.

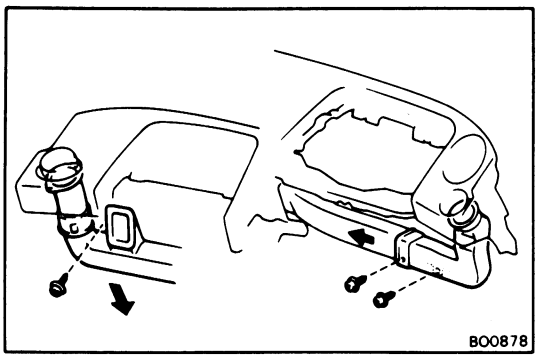

18. REMOVE INSTRUMENT PANEL SAFETY PAD

(a) Disconnect the two combination meter wiring harness clamps.

(b) Remove the two screws and insert the heater to register duct No. 8 into the heater unit.

(c) Remove the one screw and separate the heater to register duct No. 2 from the heater to register duct No. 1.

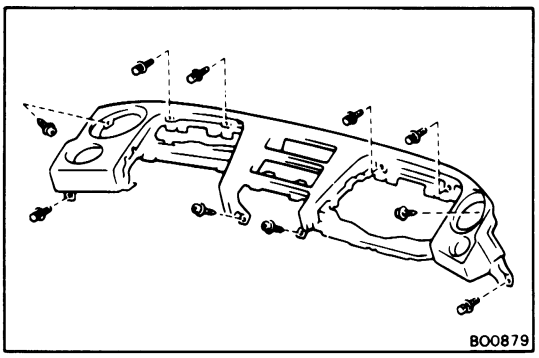

(d) Remove the six bolts and the four screws.

(e) Pull the safety pad in front of you, disconnect the clock connector and remove the safety pad.

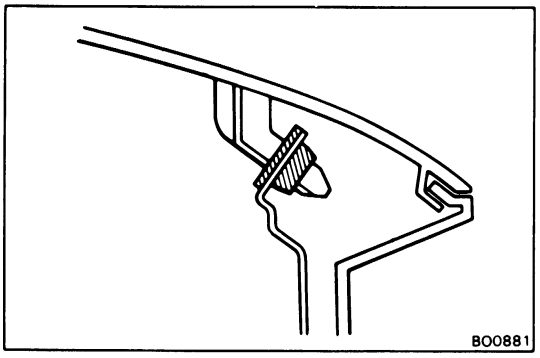

INSTALLATION OF INSTRUMENT PANEL

(See page BO-53)

INSTALL PARTS OF INSTRUMENT PANEL IN REVERSE SEQUENCE OF REMOVAL

NOTE:

- Insert the both of instrument cluster finish upper panel into the hole of instrument panel center reinforcement. Match the seam of the instrument cluster finish upper panel with the instrument panel finish end panel head and insert.
- Install the glove compartment with the door check arm pulled out.

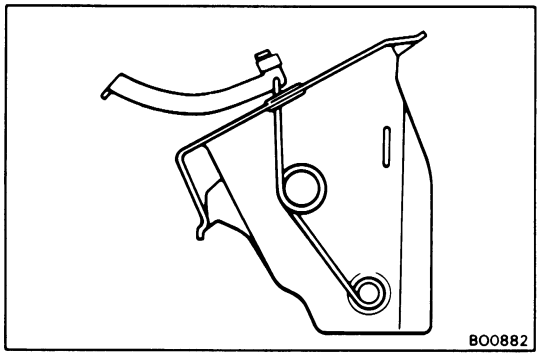

- Install the glove compartment door with the door check arm as shown in the figure.

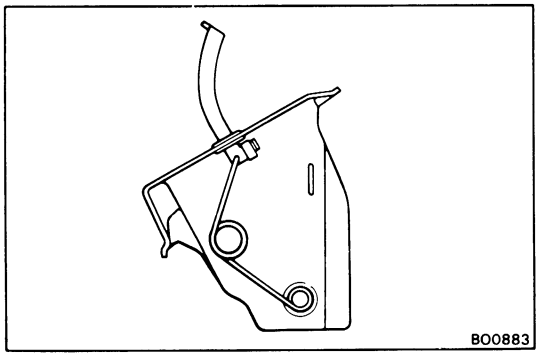

SEAT

COMPONENTS

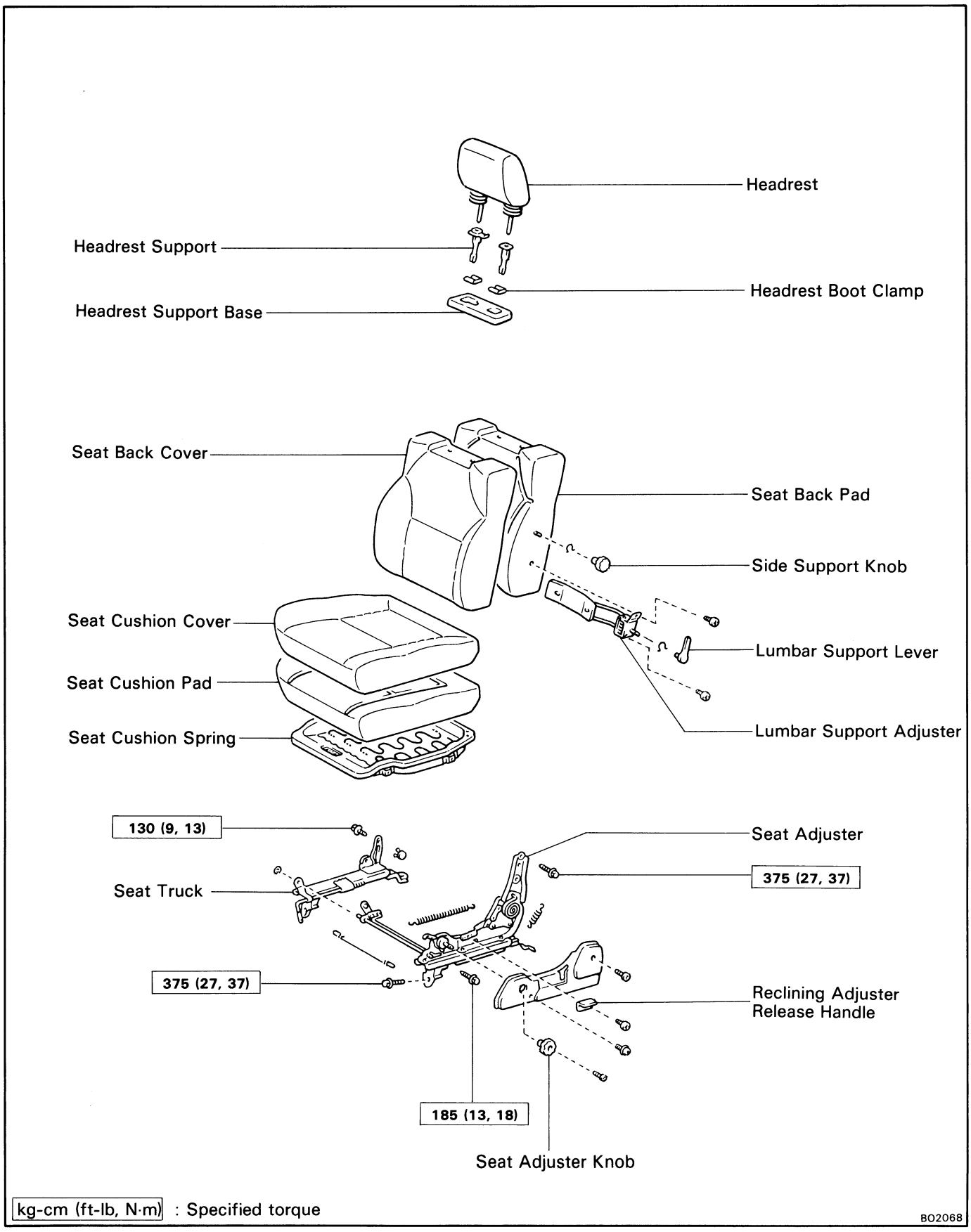

SEAT BELT

COMPONENTS

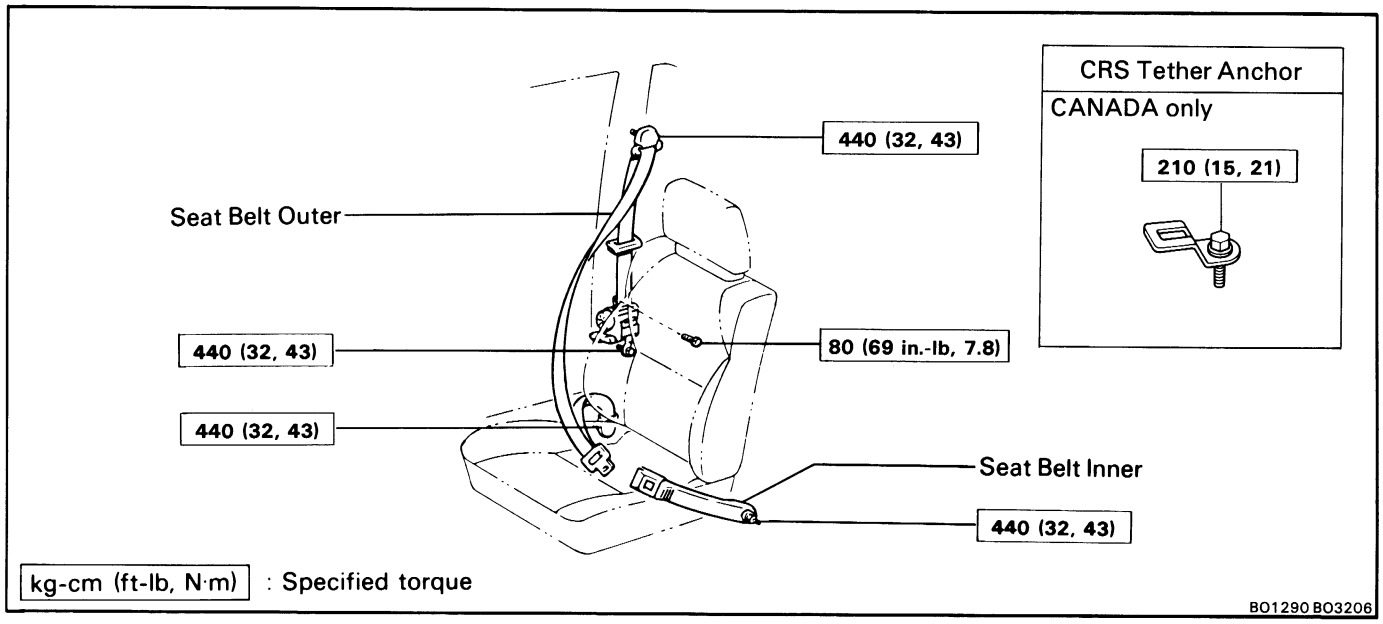

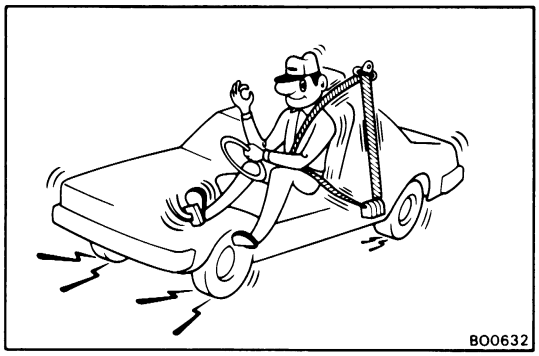

SEAT BELT
[Emergency Locking Retractor (ELR) Type]

1. RUNNING TEST (IN SAFE AREA)

(a) Fasten the front seat belt.

(b) Drive the car at 10 mph (16 km/h) and make a very hard stop.

(c) Check that the belt is locked and cannot be extended at this time.

NOTE: Conduct this test in a safe area. If the belt dose not lock, remove the belt mechanism assembly an conduct the following static check. Also, whenever installing a new belt assembly, verify the proper operation before installation.

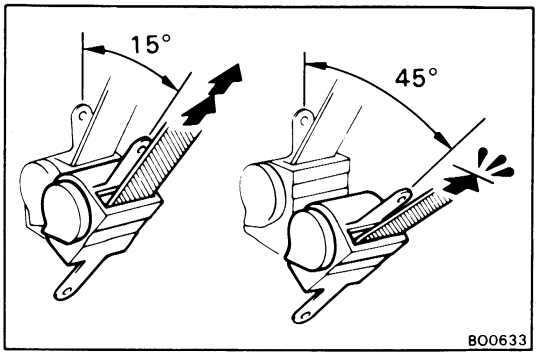

2. STATIC TEST

(a) Remove the locking retractor assembly.

(b) Tilt the retractor slowly.

(c) Verify that the belt can be pulled out at a tilt of 15 degrees or less, and cannot be pulled out at over 45 degrees of tilt.

If a problem is found, replace the assembly.

BODY DIMENSIONS

Symbol	Name	Hole dia. (mm).
A, a	Fender Installation Nut-Front	6ϕ
B, b	Front Spring Support Hole-Inner	9.5ϕ
C, c	Fender Installation Nut-Rear	6ϕ
D	Cowl Top Panel Center Mark	—
E, e	Front Side Member Bumper Installation Hole	RH 13 x 11 LH 11ϕ
F, f	Front Side Member Working Hole	15ϕ
G, g	Front Side Member Working Hole	15ϕ
H, h	Radiator Support Upper Installation Nut	6ϕ
I, i	Radiator Support Upper Installation Nut	6ϕ
J, j	Cowl Top Side Panel Standard Hole	9ϕ
K, k	Front Side Member Bumper Installation Nut	12ϕ
L, l	Front Crossmember Working Hole	13ϕ
M, m	Front Side Member Standard Hole	13ϕ
N, n	Strut Bar Bracket Installation Nut-Front Side Inner	10ϕ
O, o	Strut Bar Bracket Installation Nut-Rear Side Rear	10ϕ
P, p	Lower Arm Installation Hole	13ϕ
Q, q	Lower Control Link Support Installation Nut	10ϕ
R, r	Front Side Member Standard Hole	13ϕ
S, s	Front Floor Under Reinforcement Working Hole	15ϕ
T, t	Front Floor Under Reinforcement Working Hole	15ϕ
U, u	Rear Floor Side Member Standard Hole	13ϕ
V, v	Strut Bar Installation Hole-Inner	12ϕ
W, w	Engine Mounting Bracket Hole-Front	12.5ϕ
X, x	Rear Floor Side Member Standard Hole	13ϕ
Y, y	Rear Suspension Arm Bracket Installation Nut-Outer Side Rear	10ϕ
Z, z	Rear Suspension Arm Bracket Installation Nut-Inner	10ϕ
AA, aa	Rear Floor Side Member Bumper Installation Hole	13ϕ
BB	Upper Back Panel Center Mark	1.5R
CC, cc	Upper Back Panel Standard Hole	12ϕ
DD, dd	Rear Spring Support Hole-Front	9.5ϕ
EE, ee	Luggage Door Hinge Installation Hole	11ϕ
FF, ff	Trim Board Installation Hole	7ϕ
GG, gg	Rear Bumper Installation Hole	RH 18 x 11 LH 18 x 15

Front Body

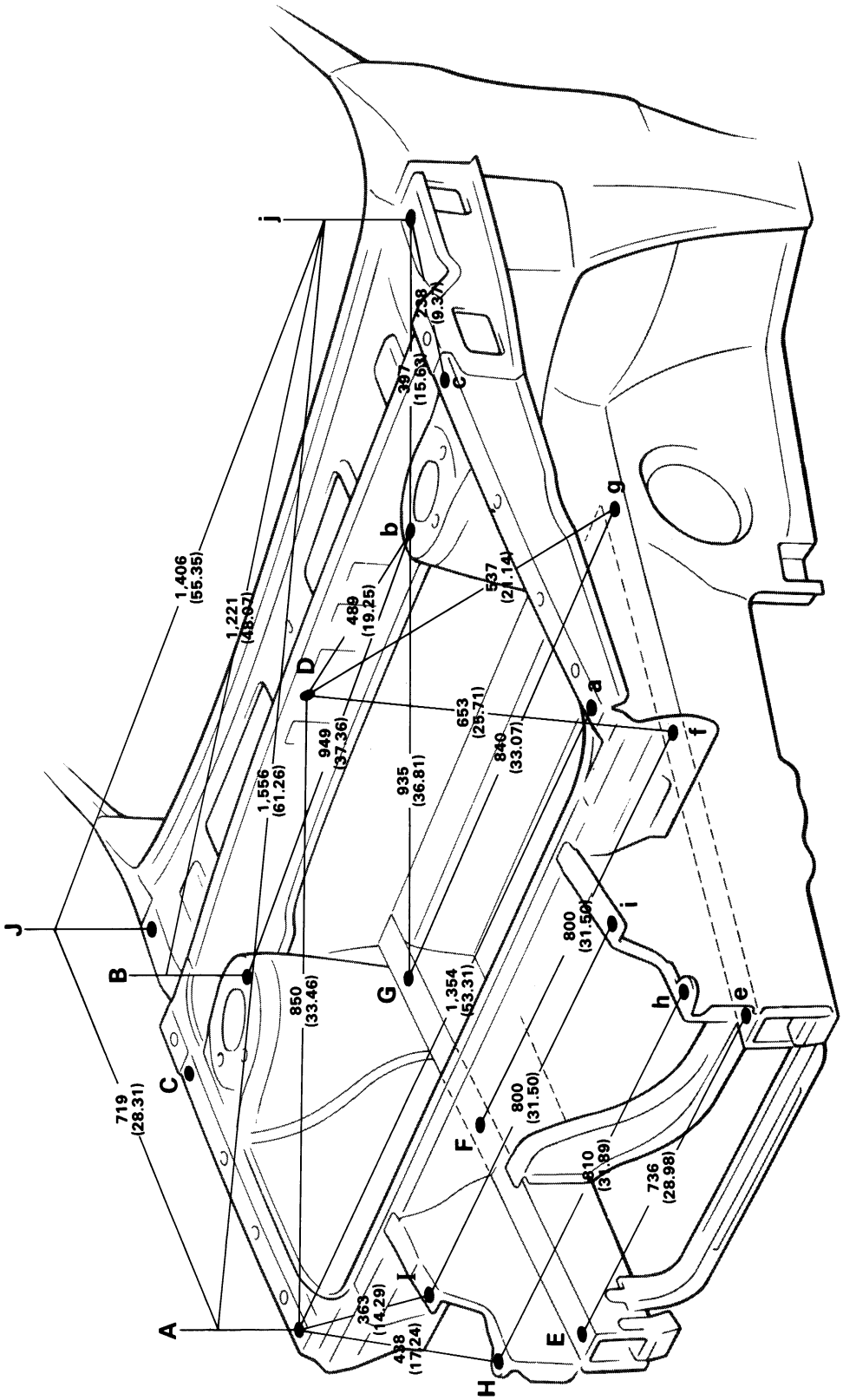

The dimensions in the following drawing indicates actual distance. Therefore, please use the dimensions as a reference.

BO0884

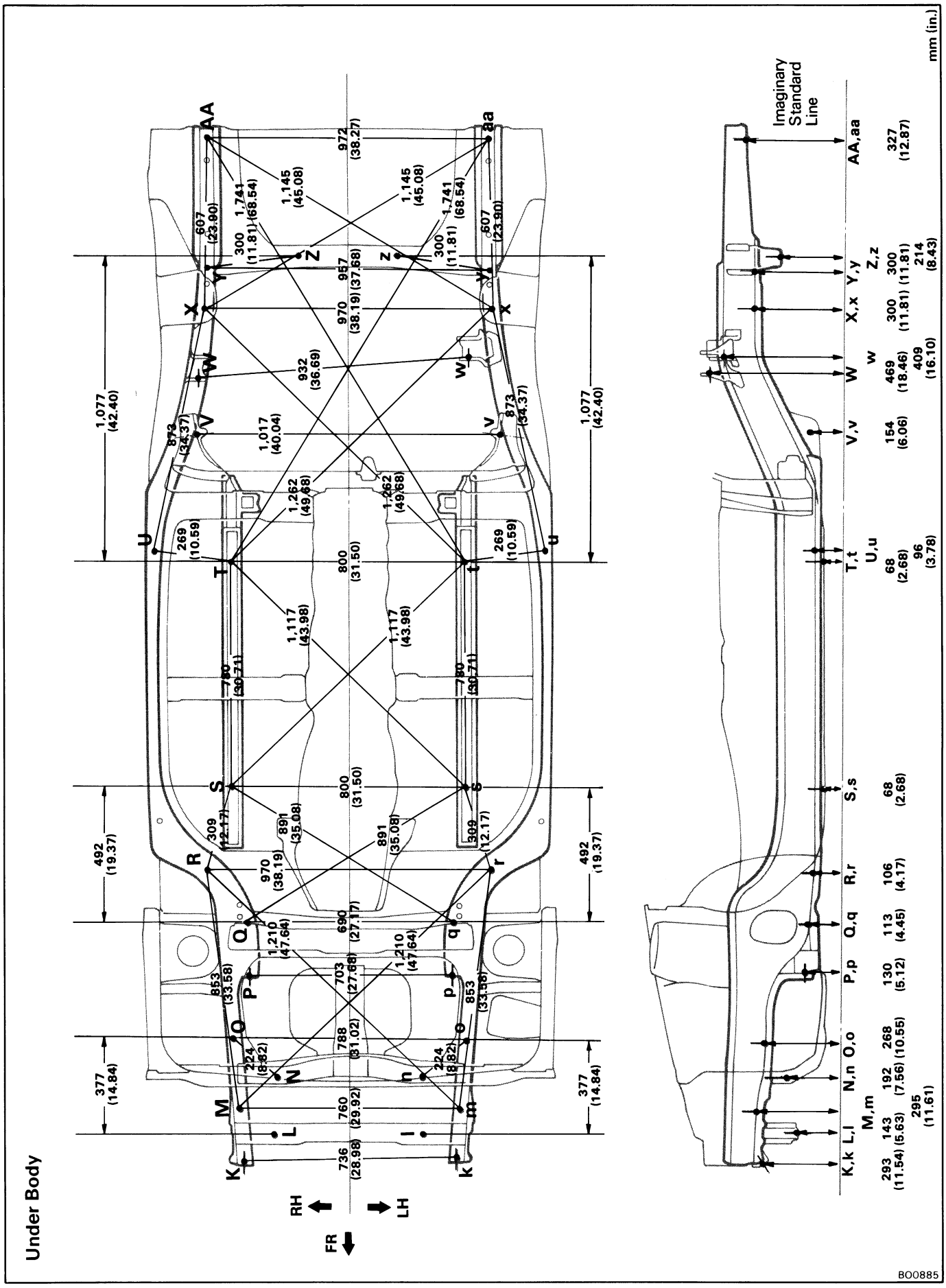
Under Body
mm (in.)
Imaginary Standard Line
AA,aa 327 (12.87)
Z,z 300 (11.81) 214 (8.43)
X,x Y,y 300 (11.81)
W w 469 (18.46) 409 (16.10)
V,v 154 (6.06)
T,t U,u 68 (2.68) 96 (3.78)
S,s 68 (2.68)
R,r 106 (4.17)
Q,q 113 (4.45)
P,p 130 (5.12)
O,o N,n 268 (10.55)
M,m 192 (7.56) 295 (11.61)
K,k L,l 143 (5.63) 293 (11.54)
1,077 (42.40)
492 (19.37)
377 (14.84)
972 (38.27)
1,145 (45.08)
1,741 (68.54)
607 (23.90)
300 (11.81)
957 (37.68)
970 (38.19)
932 (36.69)
873 (34.37)
1,017 (40.04)
1,262 (49.68)
269 (10.59)
800 (31.50)
1,117 (43.98)
780 (30.71)
309 (12.17)
891 (35.08)
690 (27.17)
1,210 (47.64)
853 (33.58)
703 (27.68)
788 (31.02)
224 (8.82)
760 (29.92)
736 (28.98)
RH
LH
FR
BO0885

Rear Body

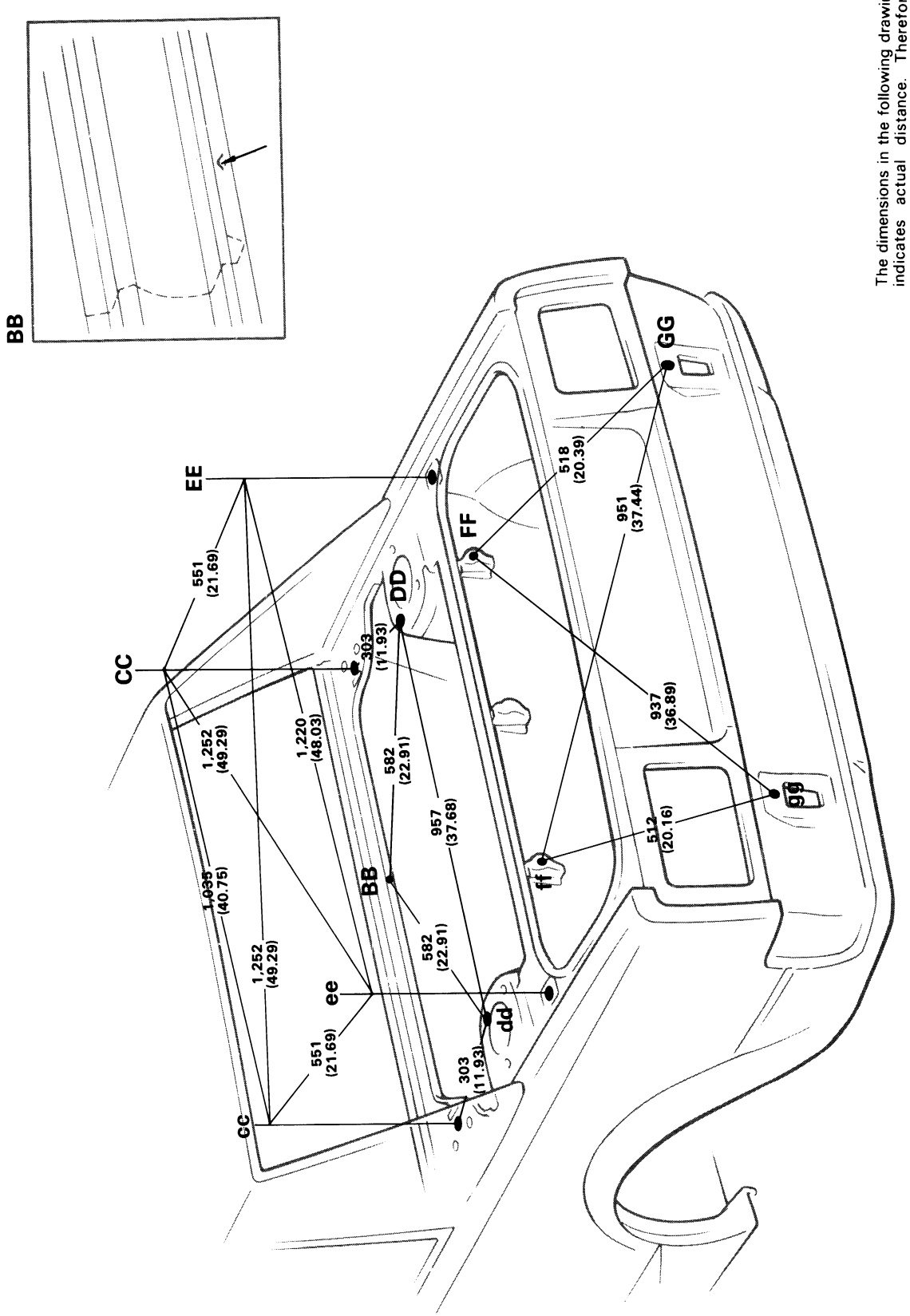

The dimensions in the following drawing indicates actual distance. Therefore, please use the dimensions as a reference.

mm (in.)

BO0886

AIR CONDITIONING SYSTEM

	Page
GENERAL INFORMATION	AC-2
AIR CONDITIONING SYSTEM CIRCUIT	AC-4
SYSTEM COMPONENTS	AC-7
GENERAL DESCRIPTION	AC-8
SPECIAL TOOLS AND EQUIPMENT	AC-10
SSM (SPECIAL SERVICE MATERIALS)	AC-10
TROUBLESHOOTING	AC-10
Checking of Refrigeration System with Manifold Gauge	AC-12
ON-VEHICLE INSPECTION	AC-15
REFRIGERATION SYSTEM	AC-16
Checking of Refrigerant Volume	AC-16
Installation of Manifold Gauge Set	AC-16
COMPRESSOR	AC-17
RECEIVER	AC-31
CONDENSER	AC-31
CONDENSER FAN MOTOR	AC-33
RELAYS	AC-34
PRESSURE SWITCH	AC-35
WATER TEMPERATURE SENSOR	AC-35
COOLING UNIT	AC-36
Evaporator	AC-38
REFRIGERANT LINES	AC-39
THERMISTOR	AC-40
A/C SWITCH	AC-40
AIR CONDITIONER AMPLIFIER	AC-41
VACUUM SWITCHING VALVE (VSV)	AC-43

GENERAL INFORMATION

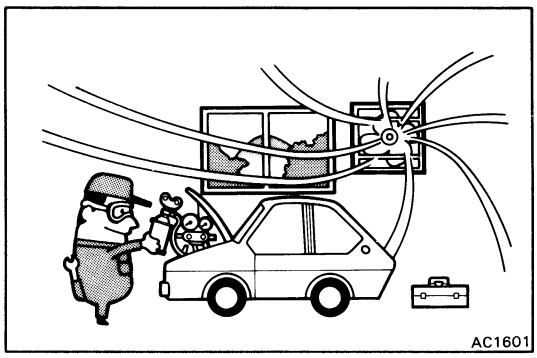
AC1601

1. WHEN HANDLING REFRIGERANT (R-12), FOLLOWING PRECAUTIONS MUST BE OBSERVED.

(a) Do not handle refrigerant in an enclosed area or near an open flame.

(b) Always wear eye protection.

(c) Be careful that liquid refrigerant does not get in your eyes or on your skin.

If liquid refrigerant gets in your eyes or on your skin;

- Do not rub.
- Wash the area with a lot of cool water.
- Apply clean petroleum jelly to the skin.
- Go immediately to a physician or hospital for professional treatment.
- Do not attempt to treat yourself.

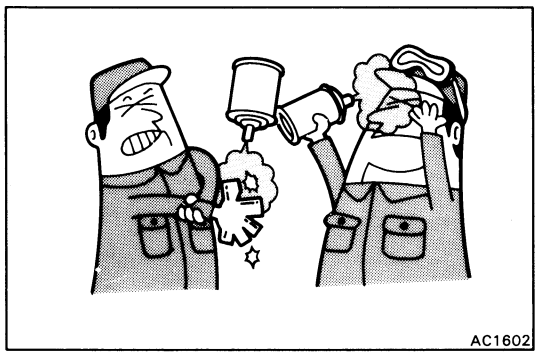
AC1602

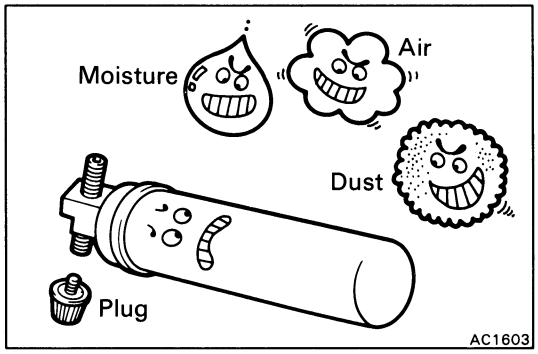

AC1603

2. WHEN REPLACEING PARTS ON REFRIGERANT LINE;

(a) Discharge refrigerant slowly before replacement.

(b) Insert a plug immediately in disconnected parts to prevent entry of moisture and dust.

(c) Do not leave a new condenser or receiver, etc., lying around with the plug removed.

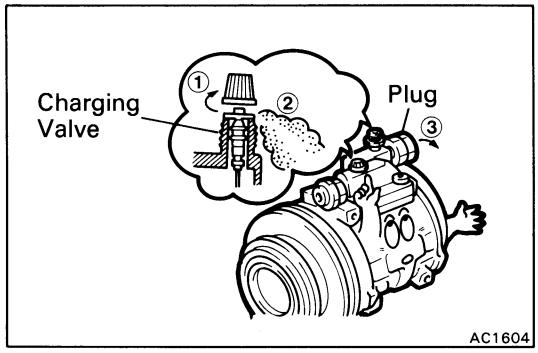

AC1604

(d) Discharge refrigerant from the charging valve before installing the new compressor.

If the refrigerant is not discharged first, compressor oil will spray out with the refrigerant gas when the plug is removed.

(e) Do not use a burner for bending or lengthening operations on tubes.

If tubes are heated with a burner, a layer of oxidation forms inside the tube, causing the same kind of trouble as an accumulation of dust.

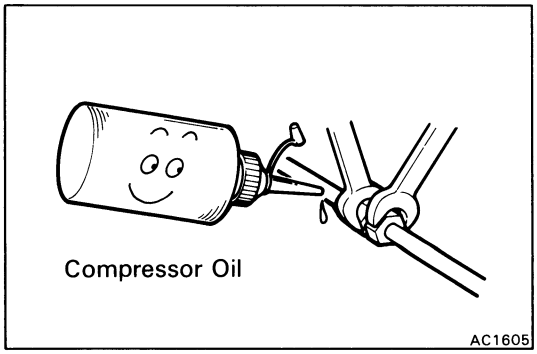

AC1605

3. WHEN TIGHTENING CONNECTING PARTS;

(a) Apply a few drops of compressor oil to O-ring fittings for easy tightening and to prevent leaking of refrigerant gas.

(b) Tighten the nut using two wrenches to avoid twisting the tube.

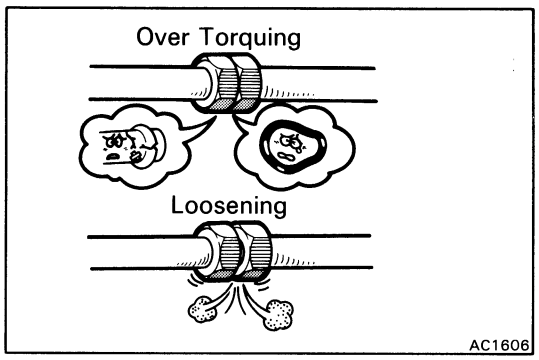

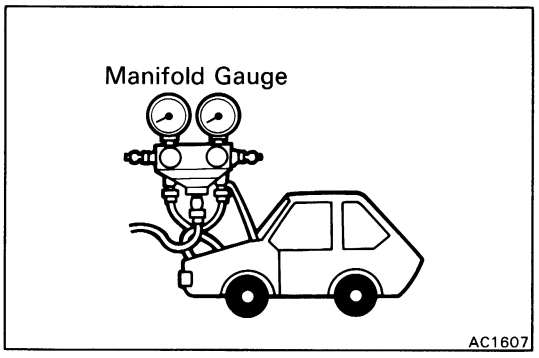

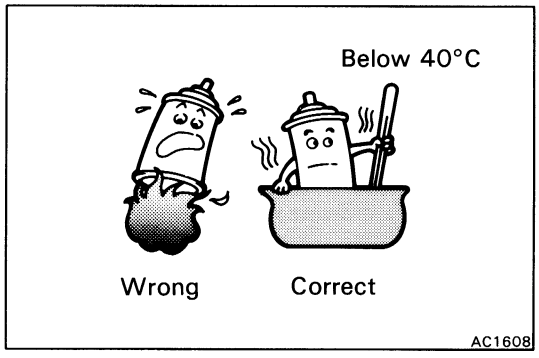

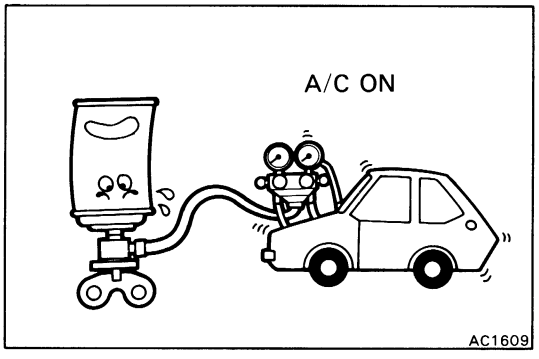

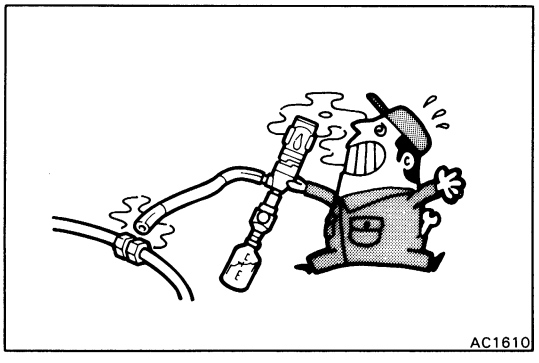

(c) Tighten the O-ring fittings or the bolted type fittings to the specified torque.

4. WHEN CONNECTING MANIFOLD GAUGE;

(a) Be sure to connect the charging hose end with a pin to the compressor charging valve.

(b) The letter "D" engraved near the compressor service valve indicates the high pressure side, and "S" indicates the low pressure side. Pay careful attention when connecting side. Pay careful attention when connecting the hose.

(c) Tighten hose by hand.

(d) To prevent loosening or connected hose, do not apply drops of compressor oil to the seat of connection.

NOTE: After connecting the manifold gauge and the refrigerant container (service can), discharge any air in the hoses.

5. WHEN EVACUATING;

Approx. 15 minutes after removal, check the system for leaks, then take at least another 15 minutes to make sure the air is fully removed.

6. WHEN HANDLING REFRIGERANT CONTAINER (SERVICE CAN);

(a) Must never be heated.

(b) Must be kept below 40°C (104°F).

(c) If warming service can with hot water, be careful that the valve on top of the service can is never immersed in the water, as the water may permeate into the refrigerant cycle.

(d) Empty service cans must never be re-used.

7. WHEN A/C IS ON AND REFRIGERANT GAS IS BEING REPLENISHED;

(a) If there is not enough refrigerant gas in the refrigerant cycle, oil lubrication becomes insufficient and compressor burnout may occur, so take care to avoid this.

(b) If the valve on the high pressure side is opened, refrigerant flows in reverse and causes the service can to rupture, so only open and close the valve on the low pressure side.

(c) If the service can is inverted and refrigerant is inserted in a liquid state, the liquid is compressed and the compressor breaks down, so the refrigerant must be inserted in a gaseous state.

(d) Be careful not to insert too much refrigerant gas, as this causes trouble such as inadequate cooling, poor fuel economy engine overheat, etc.

8. WHEN USING GAS-CYLINDER TYPE LEAK DETECTION INSTRUMENT;

(a) As a naked flame is used, first make sure that there are no flammable substances nearby before using it.

(b) Be careful, as poisonous gas is produced when refrigerant gas comes in contact with heat parts.

AIR CONDITIONING SYSTEM CIRCUIT

4A-GE ENGINE

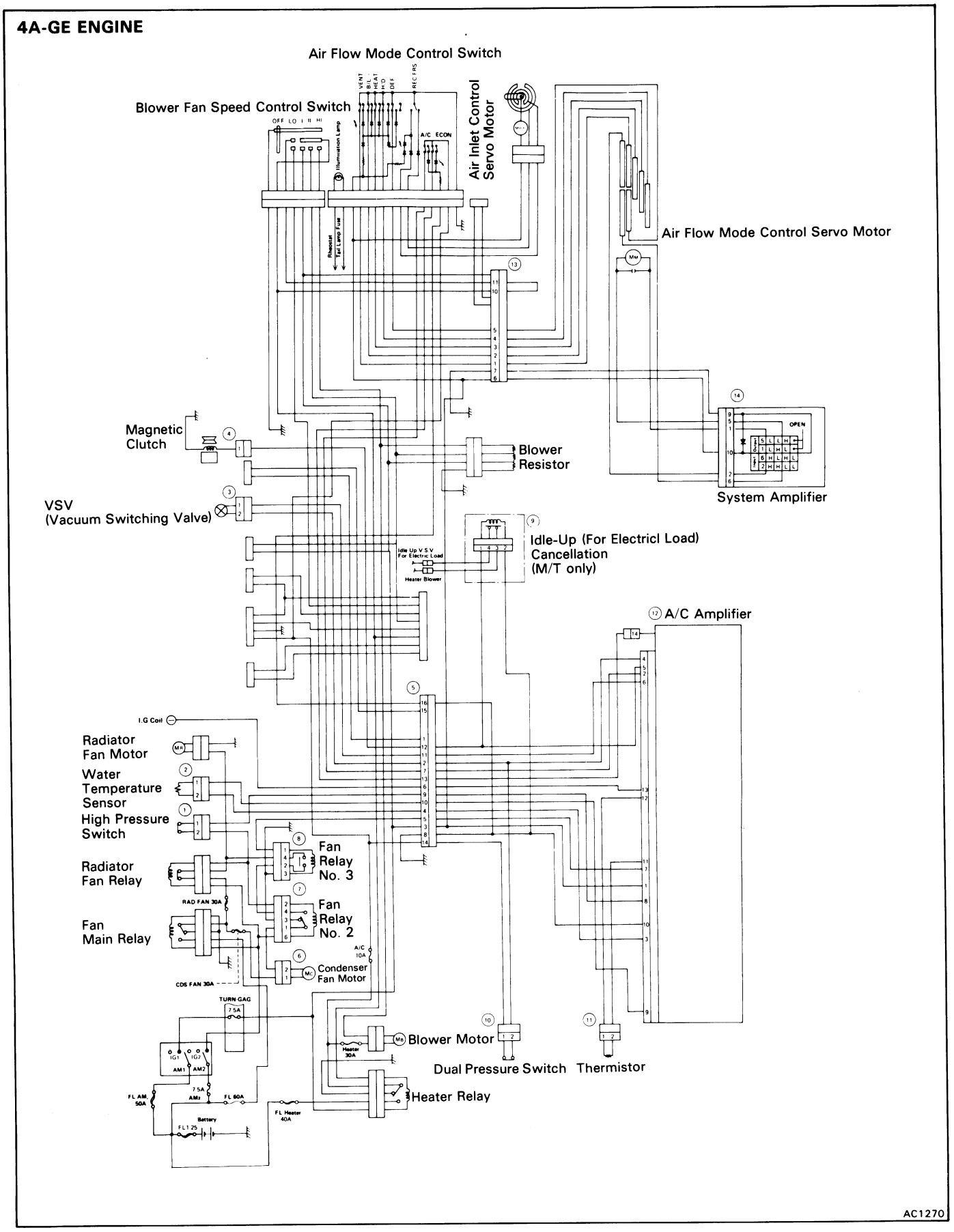

AIR CONDITIONING SYSTEM CIRCUIT (Cont'd)

4A-GZE ENGINE

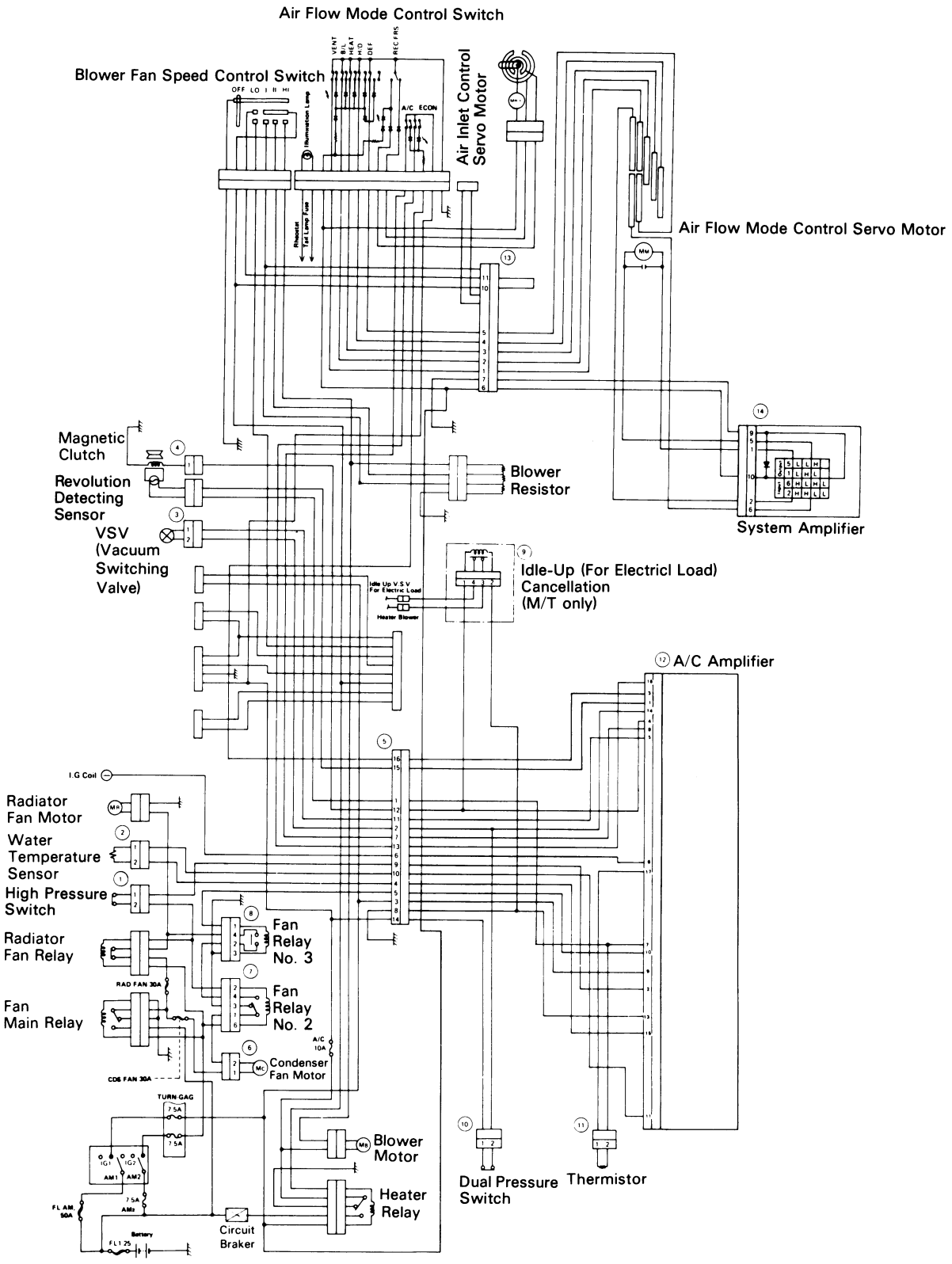

AC1440

Connectors

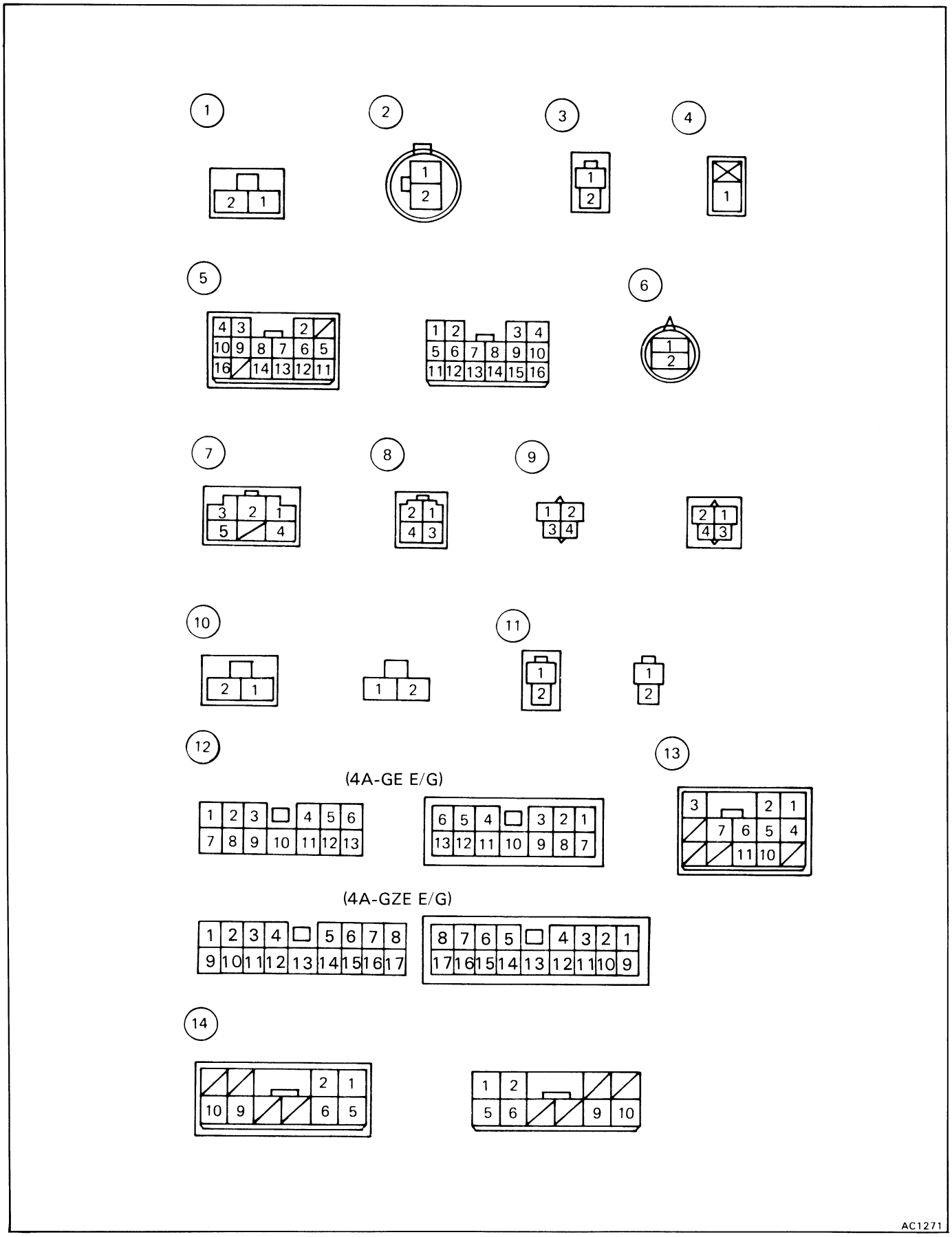

SYSTEM COMPONENTS

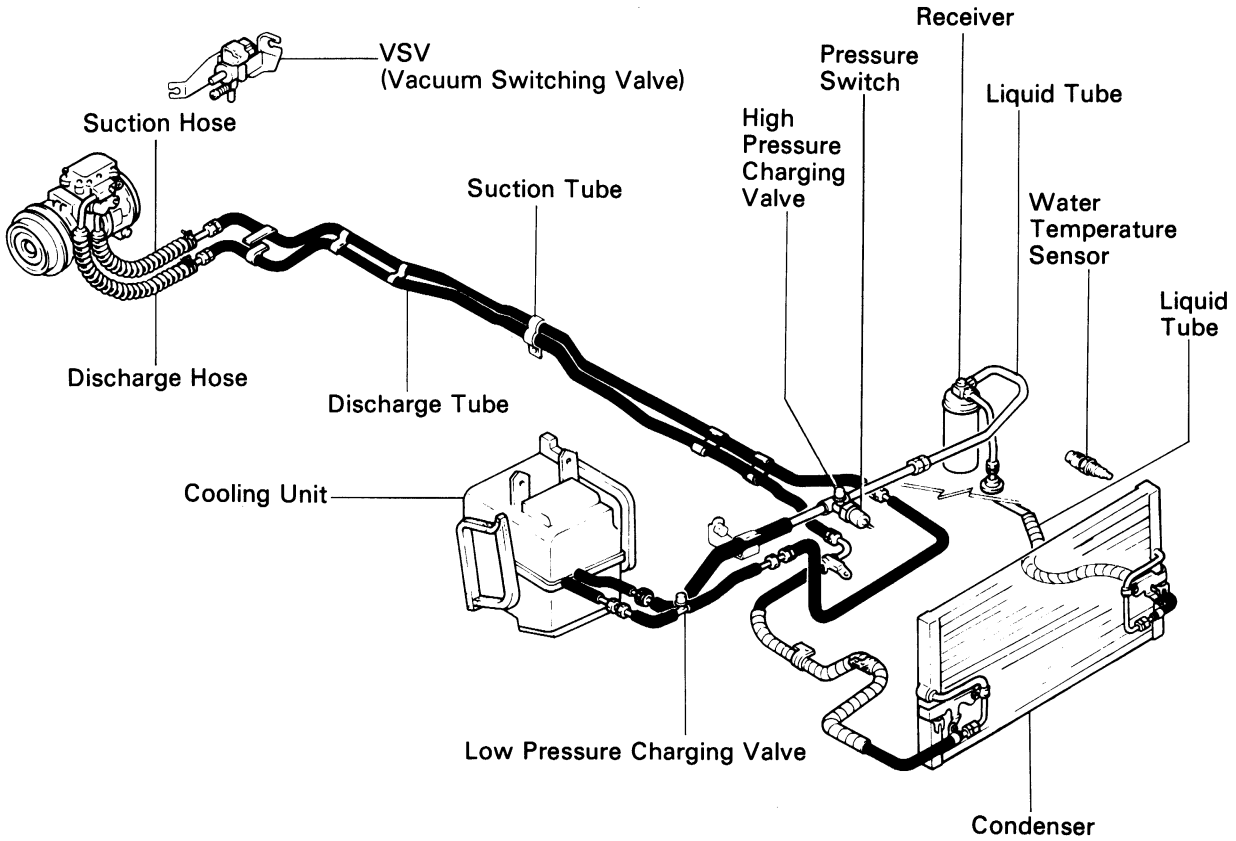

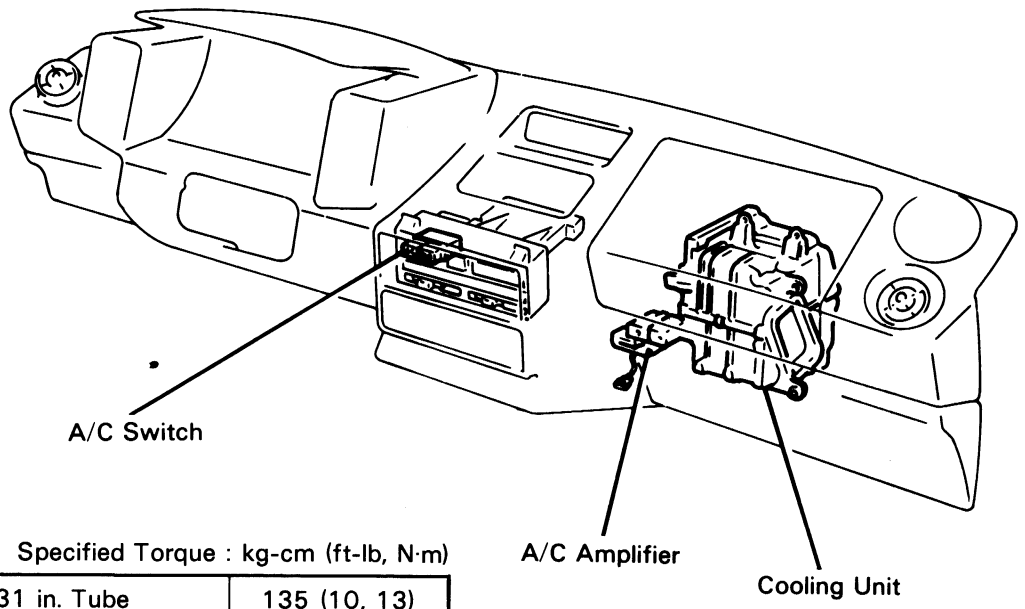

Specified Torque : kg-cm (ft-lb, N·m)

0.31 in. Tube	135 (10, 13)
0.50 in. Tube	235 (17, 23)
0.62 in. Tube	325 (24, 32)
Bolted Type for Compressor	250 (18, 25)

AC1797
AC1208

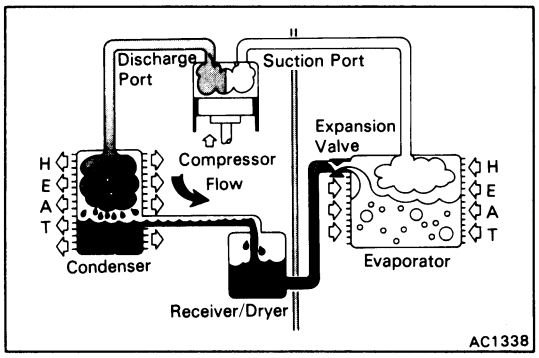

GENERAL DESCRIPTION

REFRIGERATION CYCLE

1. The compressor discharges high temperature and high pressure refrigerant containing heat absorbed from the evaporator plus the heat created by the compressor in a discharge stroke.

2. This gaseous refrigerant flows into the condenser. In the condenser, the gaseous refrigerant condenses into liquid refrigerant.

3. This liquid refrigerant flows into the receiver which stores and filters the liquid refrigerant till the evaporator requires the refrigerant.

4. The liquid refrigerant is changed by the expansion valve into a low temperature, low pressure liquid and gaseous mixture.

5. This cold and foggy refrigerant flows to the evaporator. Vaporizing the liquid in the evaporator, the heat from the warm air stream passing through the evaporator core is transferred to the refrigerant. All the liquid is changed into gaseous refrigerant in the evaporator and only heat-laden gaseous refrigerant is drawn into the compressor. Then the process is repeated again.

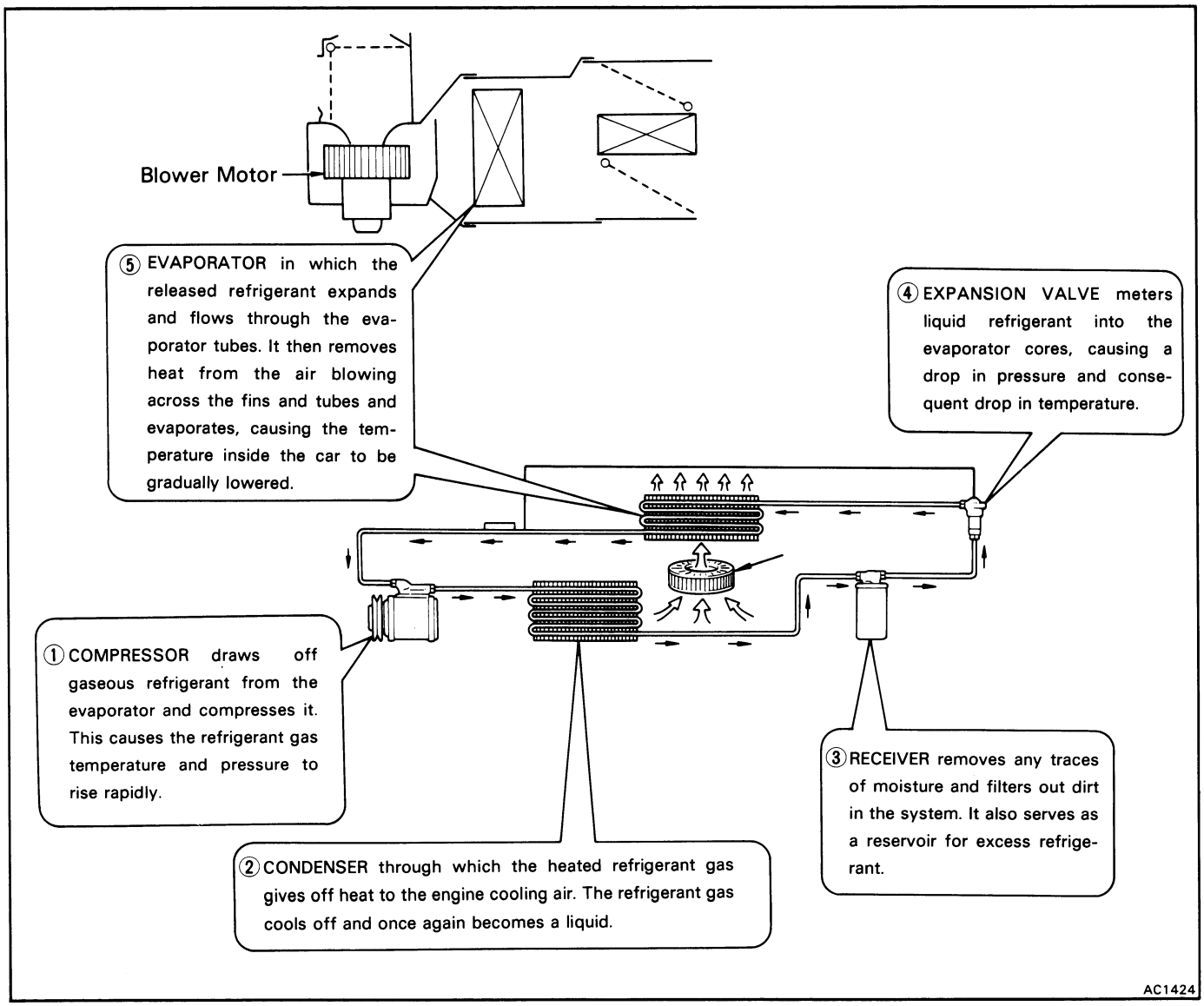

1. PRINCIPLE OF A/C ELECTRICAL CIRCUIT

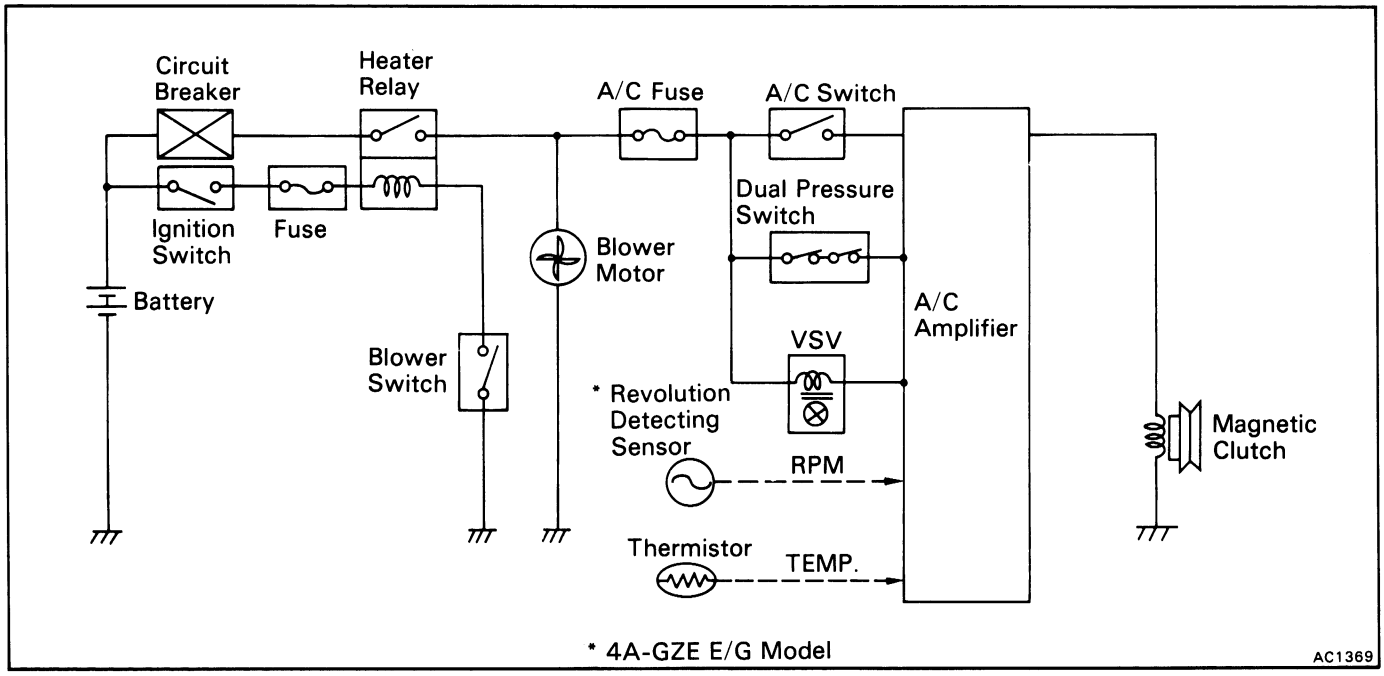

2. HOW IS THE MAGNETIC CLUTCH ENERGIZED?

The general process until the magnetic clutch is energized is shown below.

① Ignition Switch "ON"

② Blower Switch "ON" → Heater Relay "ON" (Blower Motor "RUN")

③ A/C Switch "ON" → A/C amplifier "ON" (A/C Amp. Main Power Supply)

④ Dual Pressure Switch "ON":
Refrigerant Condition (2.1 kg/cm² (30 psi, 206 kPa) less than 27 kg/cm² (384 psi, 2648 kPa)

⑤ Thermistor supplies temperature signal of evaporator to A/C amplifier.

⑥ VSV "ON" → E/G Idle Up

⑦ A/C amplifier Turns on Magnetic Clutch

⑧ Magnetic Clutch "ON"

⑨ Revolution Detecting Sensor supplies RPM signal of compressor to A/C amplifier.
If compressor is not locked, magnetic clutch is continuously energized.

SPECIAL TOOLS AND EQUIPMENT

Tool	SST No.	Use
Air conditioner service tool set	07110-58011	To evacuate and charge system
Ohmmeter	—	To perform electrical diagnosis
Voltage meter	—	To perform electrical diagnosis
Ammeter	—	To perform electrical diagnosis
Magnetic clutch tool set	07110-77011	General set for magnetic clutch
Magnetic clutch remover	07112-71010	To remove pressure plate
Snap ring pliers (External type)	07114-84020	To remove and install rotor and stator
Key remover	07112-45021	To remove key
Seal plate remover	07112-15010	To remove seal plate
Seal plate presser	07114-15010	To remove and install shaft seal
Hexagon wrench set	07110-61050	To remove and install service valve and front housing
Shaft seal remover	07112-25010	To install seal plate
Key replacer	07114-45010	To install key

SSM (SPECIAL SERVICE MATERIALS)

Part Name	Part No.	Use etc.
DENSOOIL 6,	07117-68040	Compressor
SUNISO No. 5GS or equivalent	—	

TROUBLESHOOTING

Problem	Possible causes	Remedy	Page
No blower operation	Blown fuse	Replace	AC-4, 5
	Defective blower motor	Check and repair	
	Defective blower relay	Check operation	AC-4, 5
	Defective blower switch	Check for short or open circuit	BE-35
	Blown blower resistor	Replace	BE-36
	Defective wiring connection	Check and repair	AC-4, 5
No blower control	Blown blower resistor	Replace	
	Defective blower switch	Check for short or open circuit	BE-35
	Defective servo motor	Check operation	BE-37
	Defective blower control relay	Check operation	AC-4, 5
	Defective system amplifier	Replace amplifier and recheck	
	Defective A/C amplifier	Check operation	AC-41, 42
	Defective wiring connection	Check and repair	AC-4, 5

TROUBLESHOOTING (Cont'd)

Problem	Possible causes	Remedy	Page
Interior temperature does not drop	Blown fuse	Replace	AC-4, 5
	Defective magnetic clutch	Check and repair	AC-17
	Defective compressor	Check and repair	AC-17
	Defective pressure switch	Replace	AC-35
	Insufficient refrigerant in system	Check discharge refrigeration system	AC-16
	Defective A/C switch	Check for short or open circuit	AC-40
	Defective servo motor	Check operation	BE-37
	Defective system amplifier	Replace amplifier and recheck	
	Defective A/C amplifier	Check operation	AC-41, 42
	Defective wiring connection	Check and repair	AC-4, 5
	Defective water valve	Check for leak and repair	
Interior temperature does not rise	Defective water valve	Check operation	
	Defective servo motor	Check operation	BE-37
	Defective system amplifier	Replace amplifier and recheck	
	Defective A/C amplifier	Check operation	AC-41, 42
	Defective wiring connection	Check and repair	AC-4, 5
Unstable operation (fluctuating)	Defective servo motor	Check operation	BE-37
	Defective system amplifier	Replace amplifier and recheck	
	Defective A/C amplifier	Check operation	AC-41, 42
	Defective wiring connection	Check and repair	AC-4, 5

Discharging of Refrigeration System

(See Air Conditioning Fundamentals and Repairs Pub. No. 36950E)

Evacuating and Charging of Refrigeration System

(See Air Conditioning Fundamentals and Repairs Pub. No. 36950E)

Checking of Refrigeration System with Manifold Gauge

This is a method in which the trouble is located by using a manifold gauge. Read the manifold gauge pressure when the following conditions are established:

(a) Temperature at the air inlet is 30 – 35°C (86 – 95°F)

(b) Engine running at 1,500 rpm

(c) Blower fan speed switch set at high speed

(d) Temperature control lever set at cool side

NOTE: It should be noted that the gauge indications may vary slightly due to ambient temperature conditions.

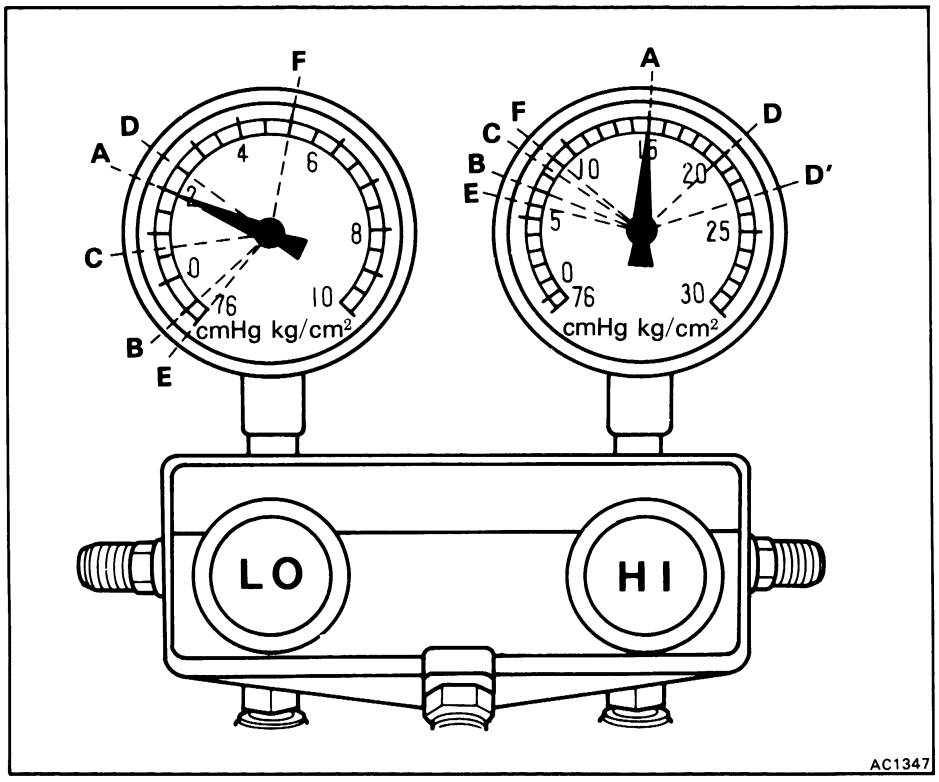

NORMALLY FUNCTIONING REFRIGERATION SYSTEM

Gauge reading:

Low pressure side
1.5 – 2.0 kg/cm²
(21 – 28 psi
147 – 196 kPa)

High pressure side
14.5 – 15.0 kg/cm²
(206 – 213 psi
1,422 – 1,471 kPa)

Each pointer of manifold gauge point to position A

No.	Trouble	Condition	Position of Pointers
1	Moisture present in refrigeration system	Periodically cools and then fails to cool	Between **A** and **B**
2	Insufficient refrigerant	Insufficient cooling	**C**
3	Poor circulation of refrigerant	Insufficient cooling	**C**
4	Refrigerant overcharge or insufficient cooling of condenser	Does not cool sufficiently	**D**
5	Expansion valve improperly mounted, heat sensing tube defective (Opens too wide)	Insufficient cooling	**D**
6	Air present in refrigeration system	Does not cool sufficiently	Low is **D** High is **D'**
7	Refrigerant does not circulate	Does not cool (Cools from time to time in some cases)	**E**
8	Insufficient compression	Does not cool	**F**

Checking of Refrigeration System with Manifold Gauge (Cont'd)

No.	Symptom seen in refrigeration system	Probable cause	Diagnosis	Remedy
1	During operation, pressure at low pressure side sometimes becomes a vacuum and sometimes normal	Moisture entered in refrigeration system freezes at expansion valve orifice and temporarily stops cycle, but normal state is restored after a time when the ice melts	Drier in oversaturated state ↓ Moisture in refrigeration system freezes at expansion valve orifice and blocks circulation of refrigerant	(1) Replace receiver and drier (2) Remove moisture in cycle through repeated vacuum purging (3) Charge refrigerant to proper amount
2	Pressure low at both low and high pressure sides Bubbles seen in sight glass Insufficient cooling performance	Gas leakage at some place in refrigeration system	Insufficient refrigerant in system ↓ Refrigerant leaking	(1) Check with leak detector and repair (2) Charge refrigerant to proper amount
3	Pressure low at both low and high pressure sides Frost on tubes from receiver to unit	Refrigerant flow obstructed by dirt in receiver	Receiver clogged	Replace receiver
4	Pressure too high at both low and high pressure sides	Unable to develop sufficient performance due to excessive refrigerant in system Condenser cooling insufficient	Excess refrigerant in cycle→refrigerant overcharged Condenser cooling insufficient→condenser fins clogged or fan motor faulty	(1) Clean condenser (2) Check fan motor operation (3) If (1) and (2) are normal, check refrigerant amount NOTE: Vent out refrigerant through gauge manifold low pressure side by gradually opening valve.
5	Pressure too high at both low and high pressure sides Frost or large amount of dew on piping at low pressure side	Trouble in expansion valve or heat sensing tube not installed correctly Refrigerant flow out	Excessive refrigerant in low pressure piping ↓ Expansion valve opened too wide	(1) Check heat sensing tube installed condition (2) If (1) is normal, test expansion valve in unit (3) Replace if defective
6	Pressure too high at both low and high pressure sides	Air entered refrigeration system	Air present in refrigeration system ↓ Insufficient vacuum purging	(1) Replace receiver and drier (2) Check compressor oil to see if dirty or insufficient (3) Vacuum purge and charge new refrigerant

* NOTE at No. 6
These gauge indications are shown when the refrigeration system has been opened and the refrigerant charged without vacuum purging.

Checking of Refrigeration System with Manifold Gauge (Cont'd)

No.	Symptom seen in refrigeration system	Probable cause	Diagnosis	Remedy
7	Vacuum indicated at low pressure side, very low pressure indicated at high pressure side Frost or dew seen on piping before and after receiver and drier or expansion valve	Refrigerant flow obstructed by moisture or dirt in refrigerant freezing or adhering to expansion valve orifice Refrigerant flow obstructed by gas leakage from expansion valve heat sensing tube	Expansion valve orifice clogged ↓ Refrigerant does not flow	Allow to stand for some time and then restart operation to determine if trouble is caused by moisture or dirt. if caused by moisture refer to procedures Step 2 on page AC-13. If caused by dirt, remove expansion valve and clean off dirt by blowing with air. If unable to remove dirt, replace valve. Vacuum purge and charge new refrigerant to proper amount. For gas leakage from heat sensing tube, replace expansion valve.
8	Pressure too high at low pressure side Pressure too low at high pressure side	Internal leak in compressor	Compression defective ↓ Valve leaking or broken sliding parts (Piston, cylinder, gasket, etc.) broken	Repair or replace compressor

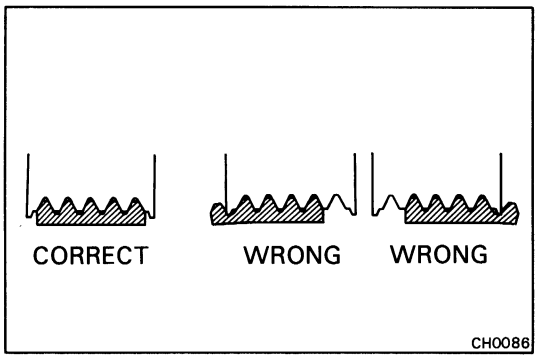

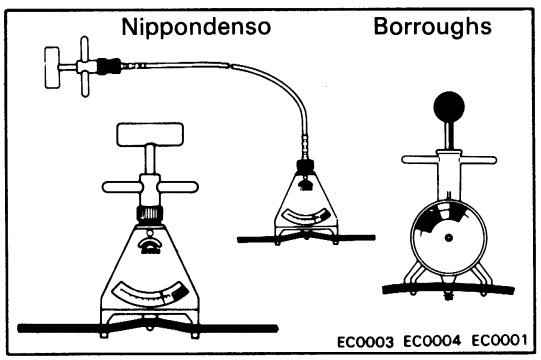

ON-VEHICLE INSPECTION

1. CHECK CONDENSER FINS FOR BLOCKAGE OR DAMAGE

If the fins are clogged, clean them with pressurized water.

CAUTION: Be careful not to damage the fins.

2. MAKE SURE THAT DRIVE BELT IS INSTALLED CORRECTLY

Check that the drive belt fits properly in the ribbed grooves.

3. CHECK DRIVE BELT TENSION

Using a belt tension gauge, check the drive belt

Belt tension gauge:
Nippondenso BTG-20 (95506-00020) or
Borroughs No. BT-33-73F

Drive belt tension:

	New belt	Used belt
4A-GE Engine	132 ± 10 lb	88 ± 10 lb
4A-GZE Engine	165 ± 10 lb	82 ± 15 lb

NOTE:
- "New belt" refers to a belt which has been used less than 5 minutes on a running engine.
- "Used belt" refers to a belt which has been used on a running engine for 5 minutes or more.

4. START ENGINE

5. TURN ON A/C SWITCH

Check that the A/C operates at each position of the blower switch.

6. CHECK MAGNETIC CLUTCH OPERATION

7. CHECK THAT IDLE INCREASES

When the magnetic clutch engages, engine revolution should increase.

Standard idle-up rpm: (rpm)

4A-GEZ Engine	A/T W/T-bar roof	950 – 1,050
	Ex. A/T W/T-bar roof	850 – 950
4A-GE Engine	–	950 – 1,050

8. CHECK CONDENSER FAN MOTOR ROTATES

9. CHECK AMOUNT OF REFRIGERANT

If you can see bubbles in the sight glass, additional refrigerant is needed. (See page AC-16)

10. IF NO COOLING OR IT IS INSUFFICIENT, INSPECT FOR LEAKAGE

Using a gas leak detector, inspect each component of the refrigeration system.

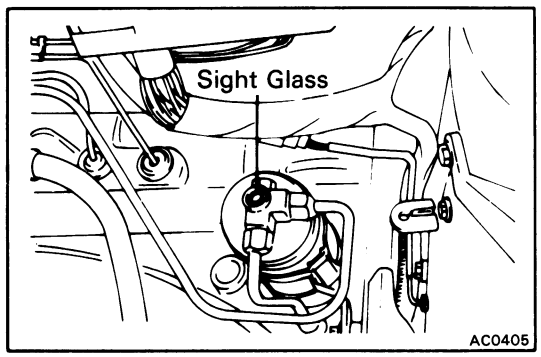

REFRIGERATION SYSTEM

Checking of Refrigerant Volume

1. **RUN ENGINE AT APPROX. 1,500 RPM**
2. **OPERATE AIR CONDITIONER AT MAXIMUM COOLING FOR A FEW MINUTES**
3. **CHECK AMOUNT OF REFRIGERANT**
   Observe the sight glass on the receiver.

Item	Symptom	Amount of refrigerant	Remedy
1	Bubbles present in sight glass	Insufficient	Check for leak with gas leak detector
2	No bubbles present in sight glass	Empty, proper or too much	Refer to items 3 and 4
3	No temperature difference between compressor inlet and outlet	Empty or nearly empty	Evacuate and charge system. Then check for leak with gas leak detector
4	Temperature between compressor inlet and outlet is noticeably different	Proper or too much	Refer to items 5 and 6
5	Immediately after the air conditioner is turned off, refrigerant in sight glass stays clear	Too much	Discharge the excess refrigerant to specified amount
6	When the air conditioner is turned off, refrigerant foams and then stays clear	Proper	—

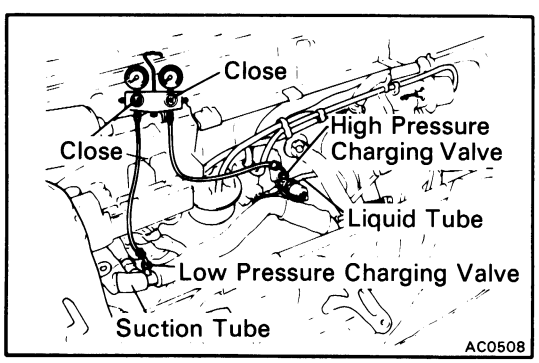

Installation of Manifold Gauge Set

NOTE: Fittings for attaching the manifold gauge set are located on the suction tube charging valve and liquid tube charging valve.

1. **CLOSE BOTH HAND VALVES OF MANIFOLD GAUGE SET**
2. **INSTALL CHARGING HOSES OF GAUGE SET TO CHARGING VALVES**

   Connect the low pressure hose to the low pressure charging valve and the high pressure hose to the high pressure charging valve. Tighten the hose nuts by hand.

   NOTE: Do not apply compressor oil to the seat of the connection.

COMPRESSOR

ON-VEHICLE INSPECTION

1. INSTALL MANIFOLD GAUGE SET
(See page AC-16)

2. RUN ENGINE AT APPROX. 1,500 RPM

3. CHECK COMPRESSOR FOR FOLLOWING:

(a) High pressure gauge reading is not lower and low–pressure gauge reading is not higher than normal.

(b) Metallic sound

(c) Leakage from shaft seal

If any of the above is not satisfactory, repair the compressor.

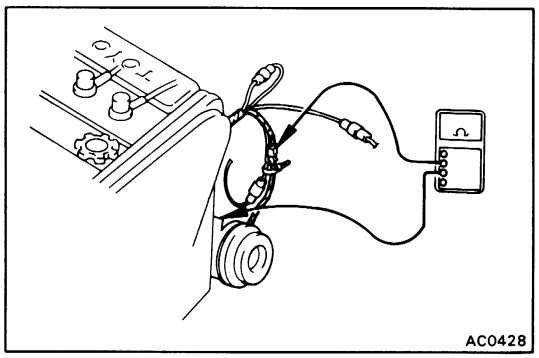

4. CHECK MAGNETIC CLUTCH

(a) Inspect the pressure plate and the rotor for signs of oil.

(b) Check the clutch bearings for noise and leaking grease.

(c) Using an ohmmeter, measure the resistance of the stator coil between the clutch lead wire and ground.

Standard resistance: 3.7 ± 0.2 Ω at 20°C (68°F)

If resistance value is not as specified, replace the coil.

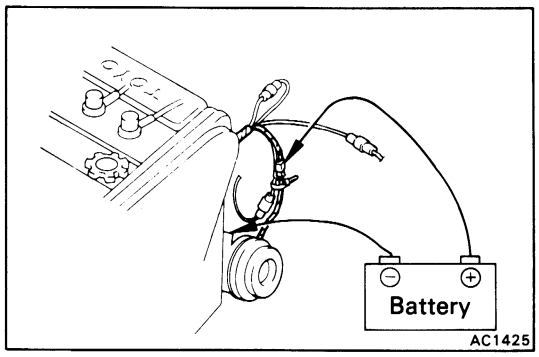

(d) Connect the positive (+) lead from the battery to terminal, check that the magnetic clutch is energized.

If magnetic clutch is not energized, replace the coil.

CAUTION: Do not short the positive (+) lead wire on the vehicle by applying battery voltage.

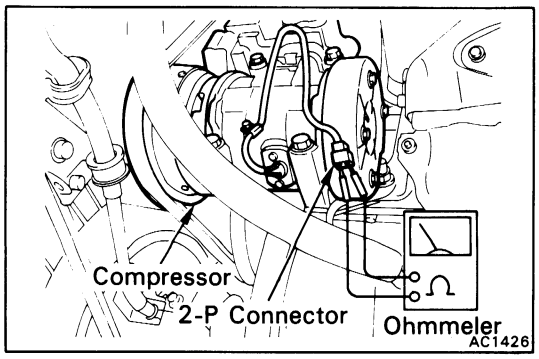

5. REVOLUTION DETECTING SENSOR (4A-GZE ENGINE ONLY)

Using an ohmmeter, measure the resistance between two terminals of the sensor.

Standard resistance: 100 – 130 Ω at 20°C (68°F)

If resistance value is not as specified, replace the revolution detecting sensor.

4A-GE ENGINE

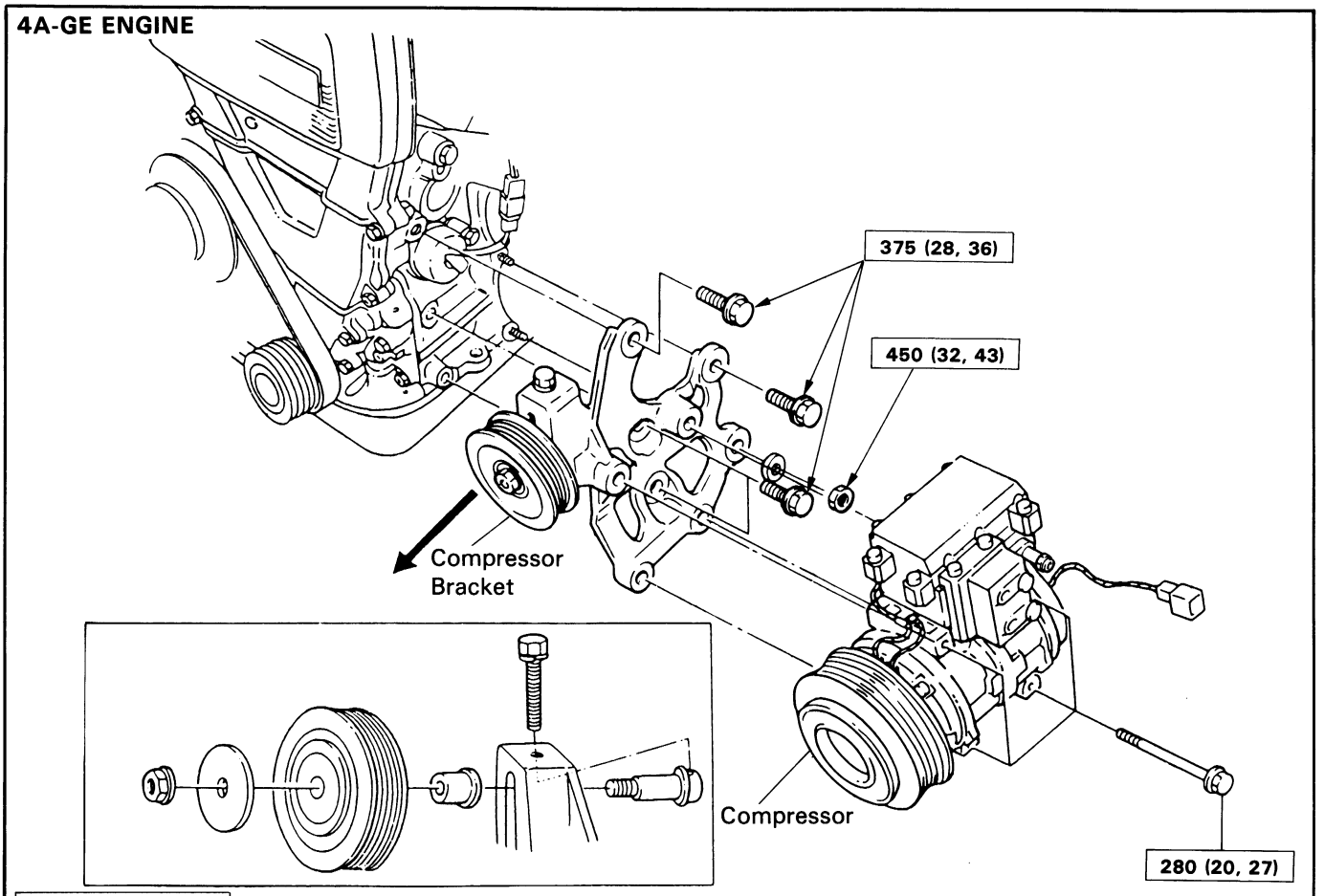

kg-cm (ft-lb, N·m) : Specified torque

AC1798

4A-GZE ENGINE

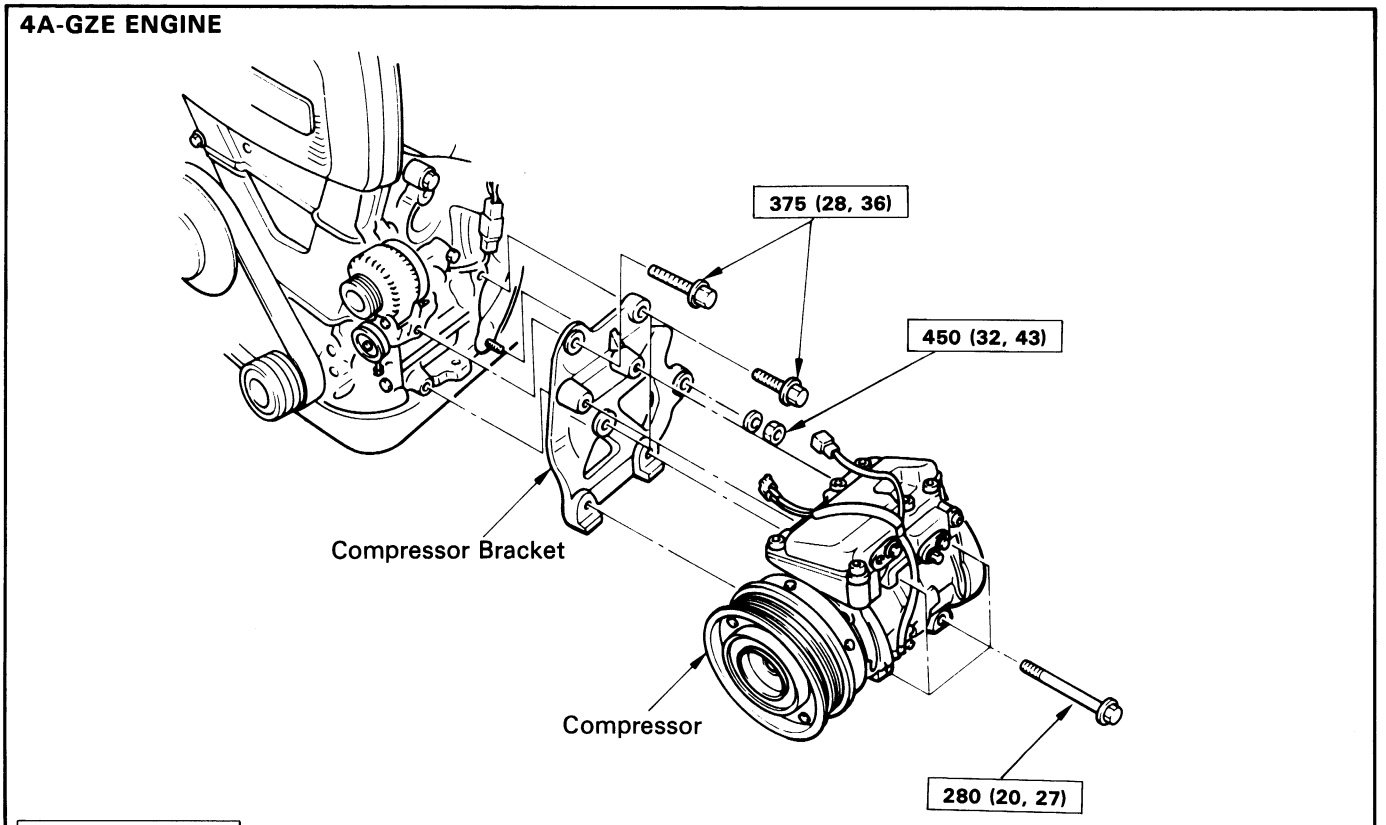

kg-cm (ft-lb, N·m) : Specified torque

AC1799

REMOVAL OF COMPRESSOR

1. **RUN ENGINE AT IDLE SPEED WITH AIR CONDITIONING ON FOR 10 MINUTES**
2. **STOP THE ENGINE**
3. **DISCONNECT NEGATIVE CABLE FROM BATTERY**
4. **REMOVE BATTERY**
5. **DISCONNECT CLUTCH LEAD WIRE FROM WIRING HARNESS**
6. **DISCHARGE REFRIGERANT FROM REFRIGERATION SYSTEM**
7. **DISCONNECT TWO HOSES FROM COMPRESSOR**

   NOTE: Cap the open fitting immediately to keep moisture out of the system.
8. **REMOVE COMPRESSOR**
   (a) Loosen the drive belt.
   (b) Remove the compressor mounting bolts and the compressor.

4A-GE ENGINE

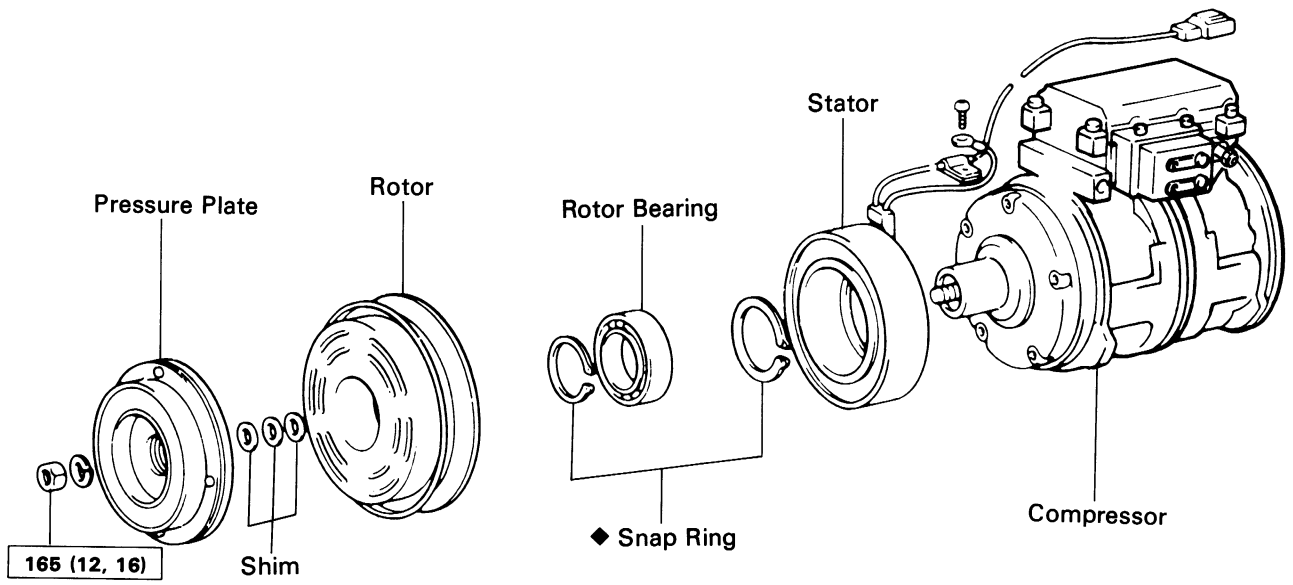

kg-cm (ft-lb, N·m) : Specified torque ◆ Non-reusable part

AC1800

4A-GZE ENGINE

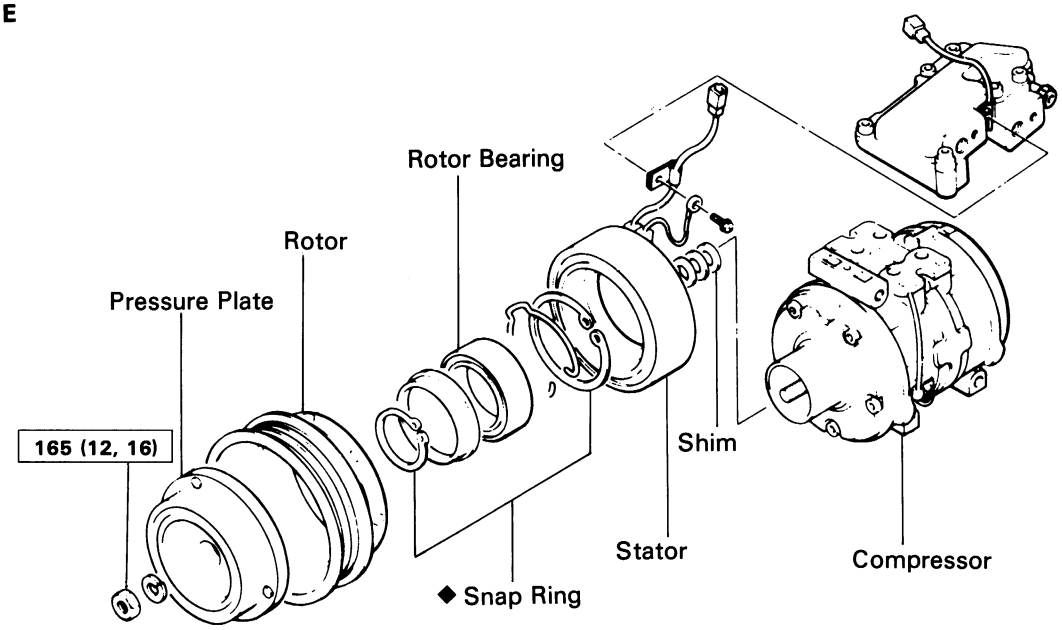

kg-cm (ft-lb, N·m) : Specified torque ◆ Non-reusable part

AC1801

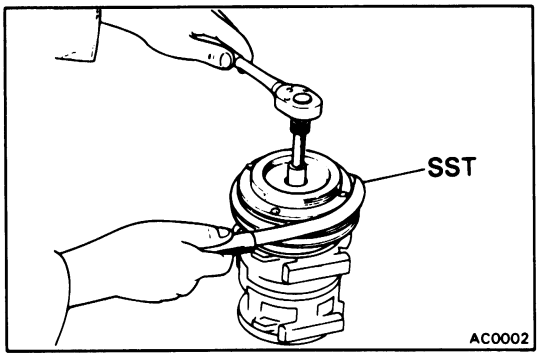

AC0002

DISASSEMBLY OF MAGNETIC CLUTCH

1. REMOVE PRESSURE PLATE

(a) Using SST and a socket, remove the shaft nut.

SST 07110-77011

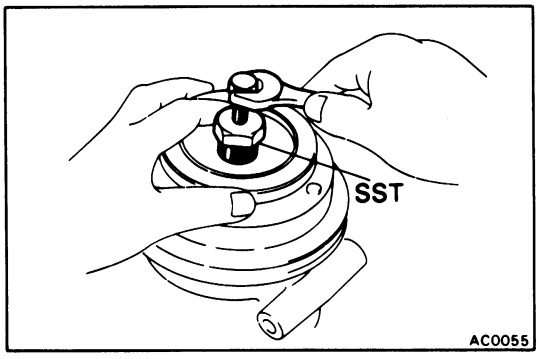

AC0055

(b) Using SST and a socket, remove the pressure plate.

SST 07112-71010

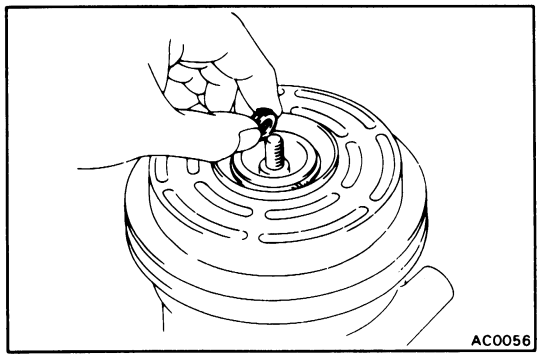

AC0056

(c) Remove the shims from the shaft.

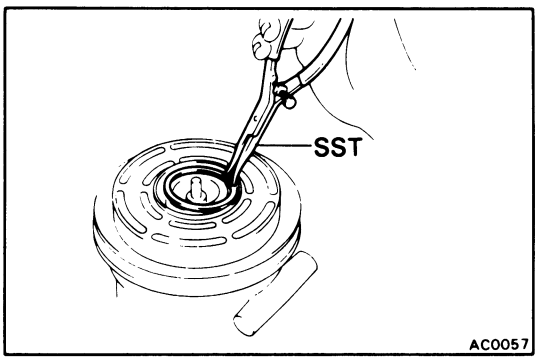

2. REMOVE ROTOR

(a) Using SST, remove the snap ring.

SST 07114-84020

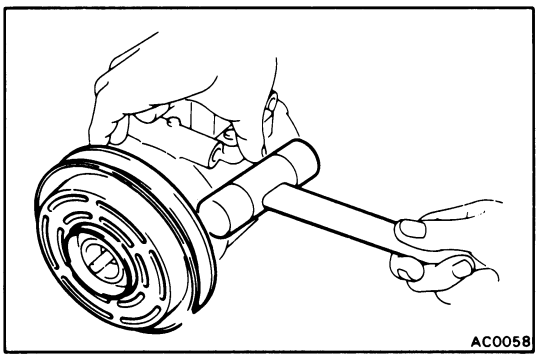

(b) Using a plastic hammer, tap the rotor off the shaft.

CAUTION: Be careful not to damage the pulley when tapping on the rotor.

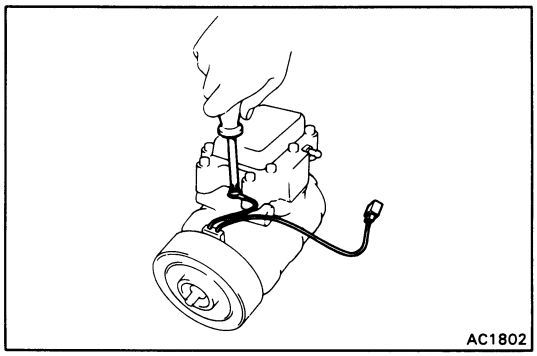

3. REMOVE STATOR

(a) Disconnect the stator lead wires from the compressor housing.

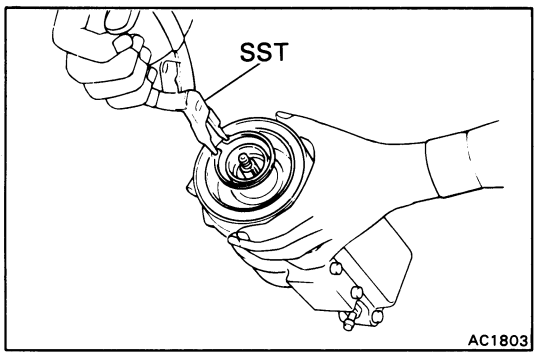

(b) Using SST, remove the snap ring. Remove the stator.

SST 07114-84020

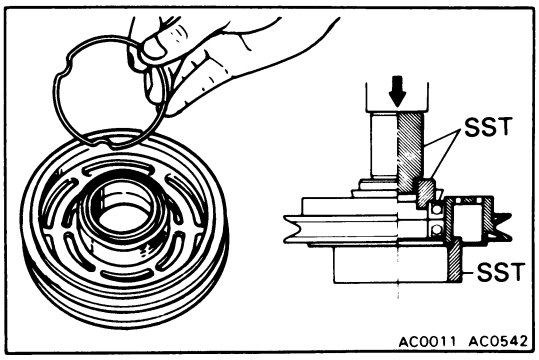

4. REMOVE ROTOR BEARINGS

NOTE: Press out the bearings only if they are to be replaced.

(a) Remove the bearing snap ring from the rotor.

(b) Using SST, press out the two bearings.

SST 07110-77011

5. INSPECT PRESSURE PLATE AND ROTOR

(a) Inspect the pressure plate and rotor surfaces for wear and scoring. Replace if necessary.

(b) Check the rotor bearings for wear and leakage of grease. Replace if necessary.

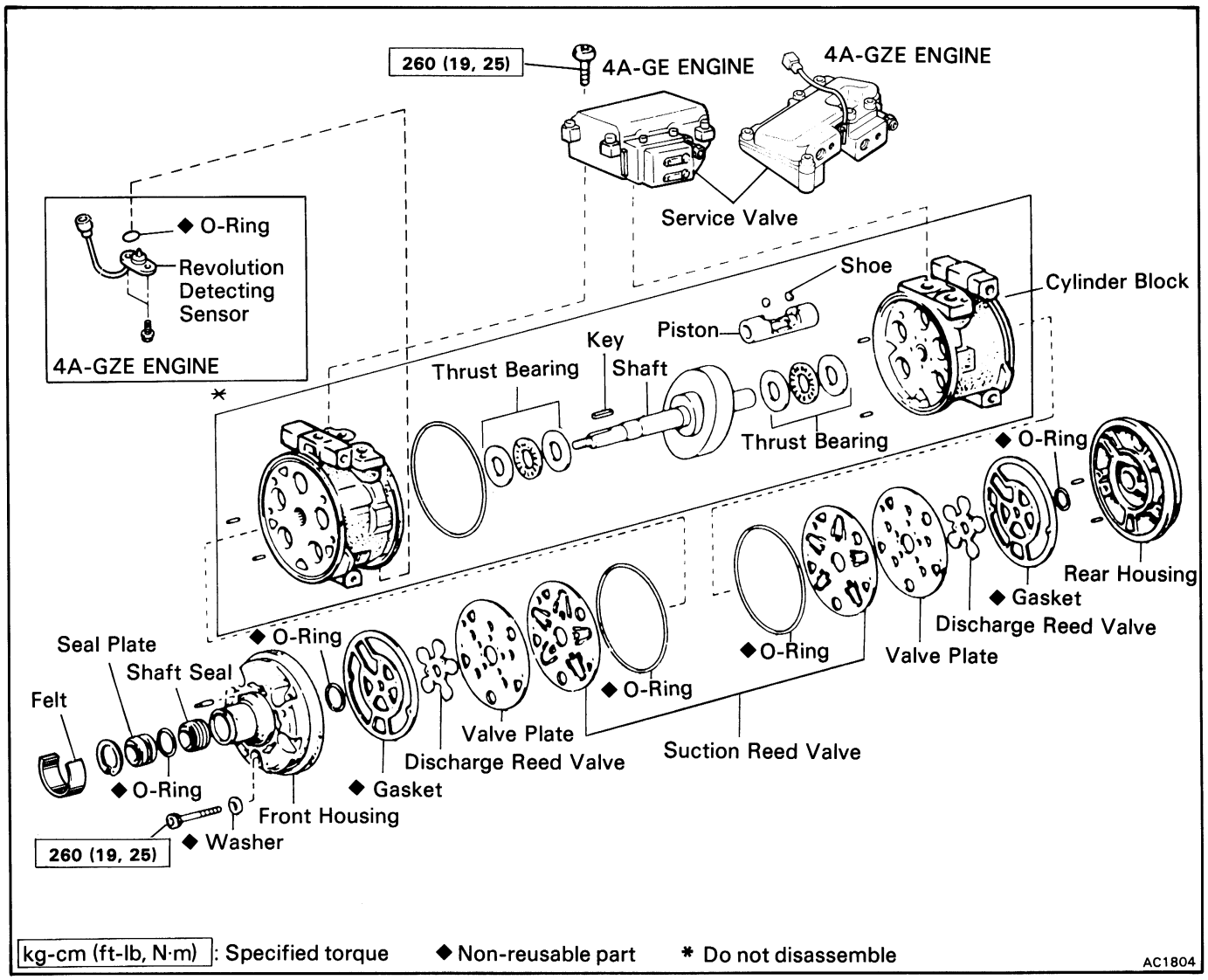

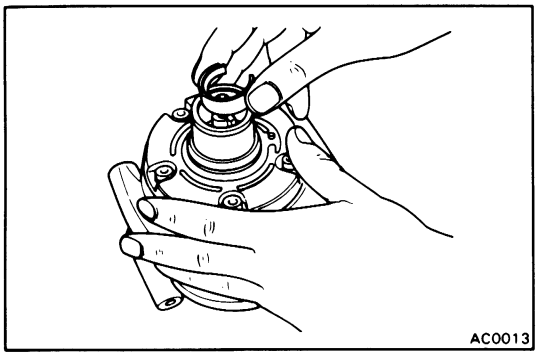

DISASSEMBLY OF COMPRESSOR

1. REMOVE FELT

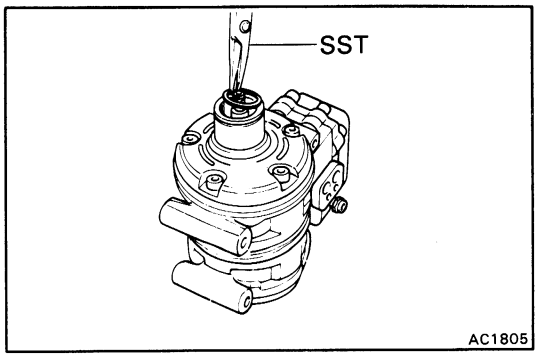

2. REMOVE SNAP RING

Using SST, remove the snap ring.

SST 07114-84020

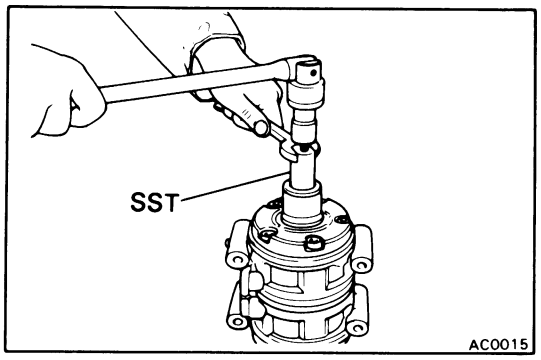

3. REMOVE KEY

Remove the key from the shaft.

SST 07112-45021

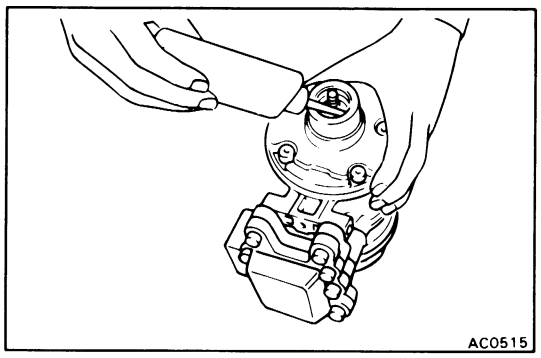

4. APPLY COMPRESSOR OIL TO INNER BORE

Apply compressor oil to the inner bore of the compressor.

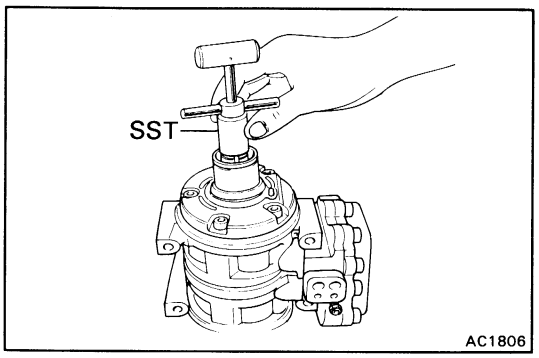

5. REMOVE SEAL PLATE

(a) Insert SST against the shaft. Then push the holder ring downward.

SST 07112-15010

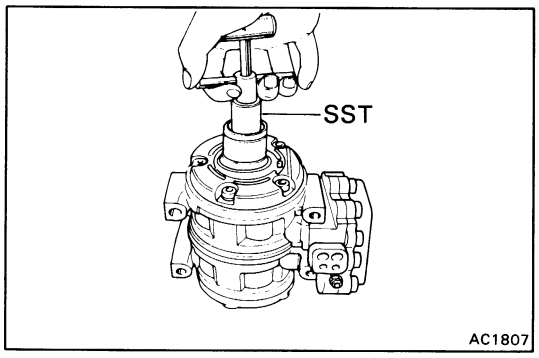

(b) Pull up the remover bar, and remove the seal plate.

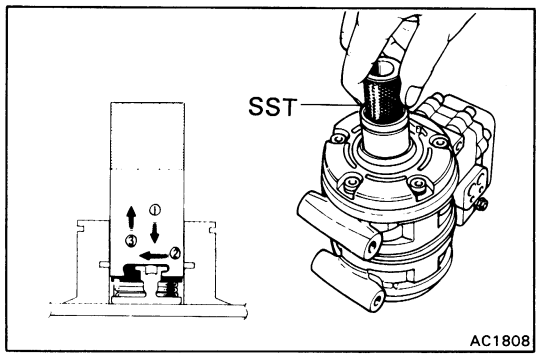

6. REMOVE SHAFT SEAL

Insert SST against the shaft, and turn it to the right while pressing on the remover.

Then remove the shaft seal.

SST 07114-15010

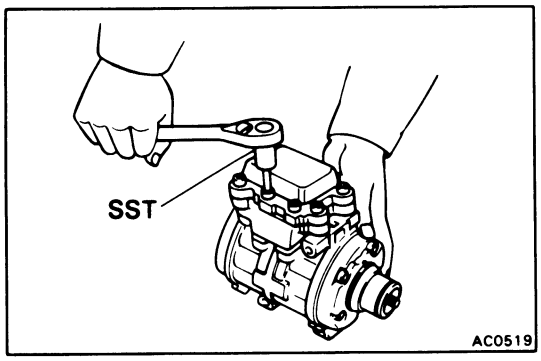

7. REMOVE SERVICE VALVE

(a) Using SST, remove the bolts holding the service valve.

SST 07110-61050

(b) Remove the O-ring from the service valve and discard them.

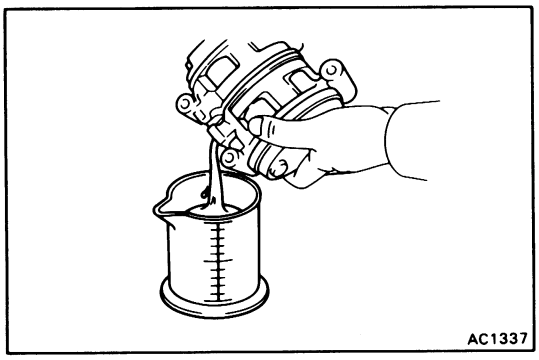

8. DRAIN COMPRESSOR OIL INTO MEASURING FLASK

Measure the quantity of drained oil because the same amount should be replaced later.

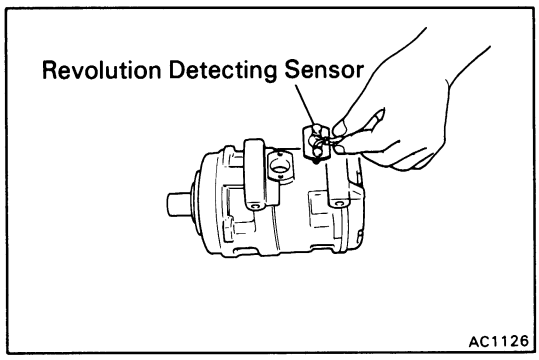

9. REMOVE REVOLUTION DETECTING SENSOR (4A-GZE ENGINE ONLY)

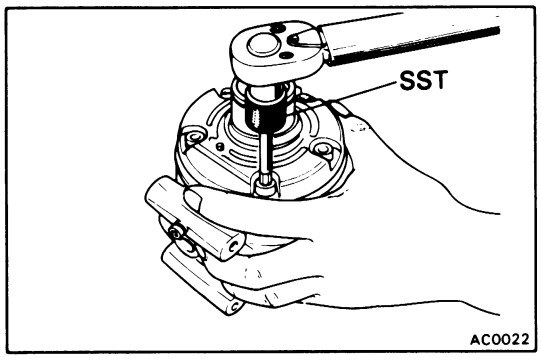

10. REMOVE FRONT HOUSING

(a) Using SST, remove the five through bolts.

NOTE: Do not reuse the five washers.

SST 07110-61050

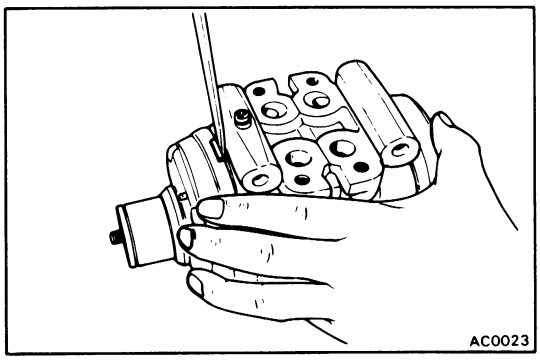

(b) Using a screwdriver, remove the front housing.

CAUTION: Be careful not to scratch the sealing surface of the front housing.

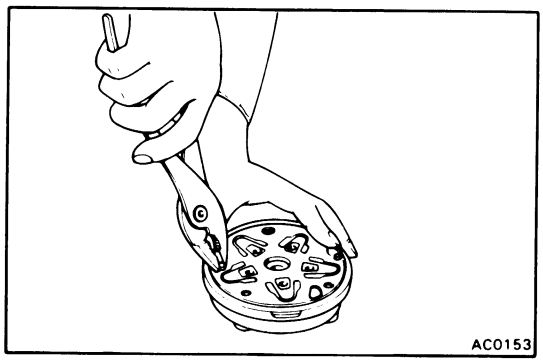

11. REMOVE FRONT VALVE PLATE

Remove the two pins from the front housing. Discard the pins.

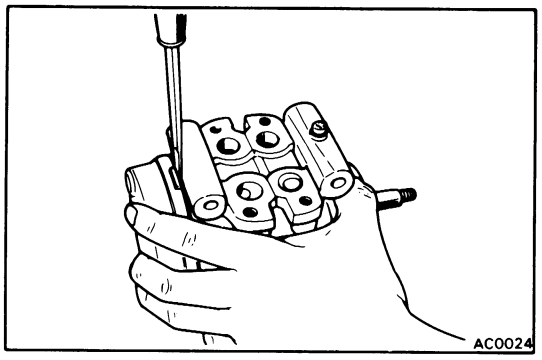

12. REMOVE REAR HOUSING

Using a screwdriver, remove the rear housing.

CAUTION: Be careful not to scratch the sealing surface of the rear housing.

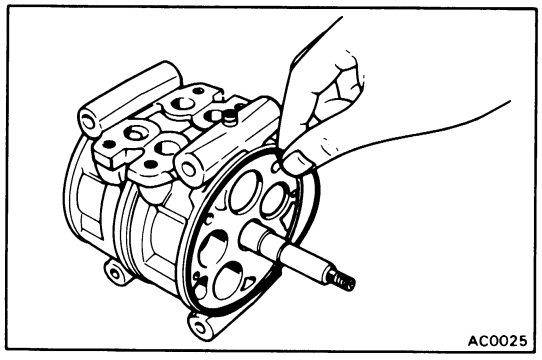

13. REMOVE FRONT AND REAR O-RINGS FROM CYLINDER BLOCK

Discard the O-rings.

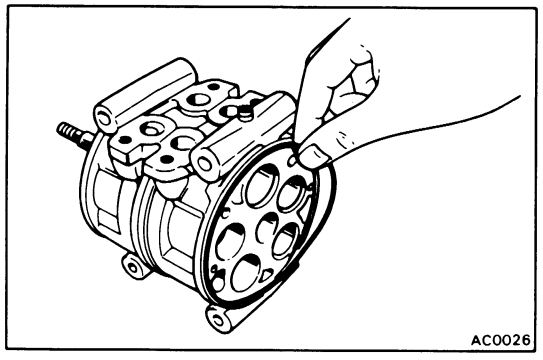

ASSEMBLY OF COMPRESSOR

(See page AC-22)

1. INSTALL REAR VALVE PLATE ON REAR CYLINDER

(a) Install two pins in the rear cylinder.

(b) Lubricate a new O-ring with compressor oil. Install the O-ring in the rear cylinder.

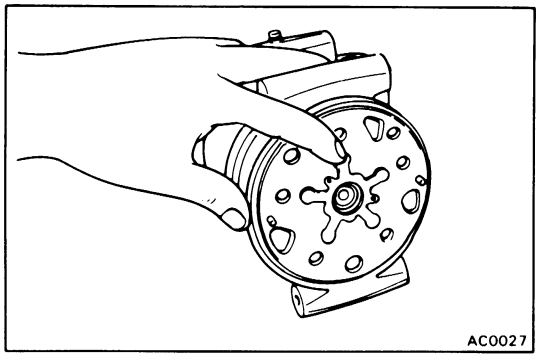

(c) Install the rear suction valve over the pins on the rear cylinder.

NOTE: The front and rear suction valves are identical.

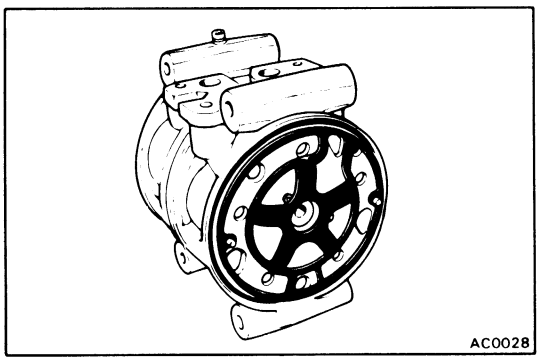

(d) Install the rear valve plate together with the discharge valve over the pins on the rear cylinder.

NOTE: The rear valve plate is marked with an "R."

(e) Lubricate the new gasket with compressor oil. Install the gasket on the valve plate.

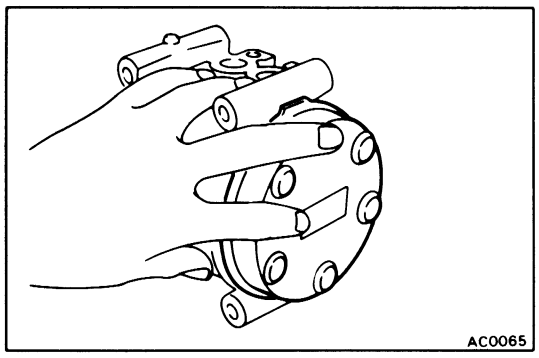

2. INSTALL REAR HOUSING ON REAR CYLINDER

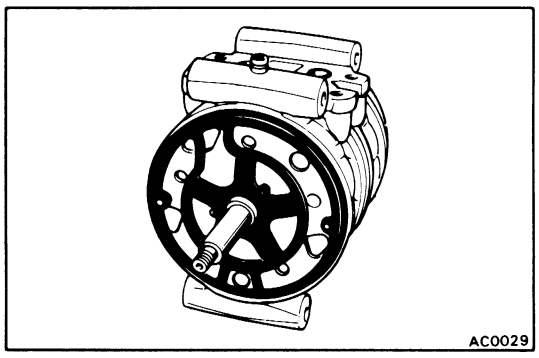

3. INSTALL FRONT VALVE PLATE ON FRONT CYLINDER

(a) Install the two pins in the front cylinder.

(b) Lubricate a new O-ring with compressor oil. Install the O-ring in the front housing.

(c) Install the front suction valve over the pins on the front cylinder.

(d) Install the front valve plate together with the discharge valve over the pins on the front cylinder.

NOTE: The front valve plate is marked with an "F."

(e) Lubricate the new gasket with compressor oil. Install the gasket on the valve plate.

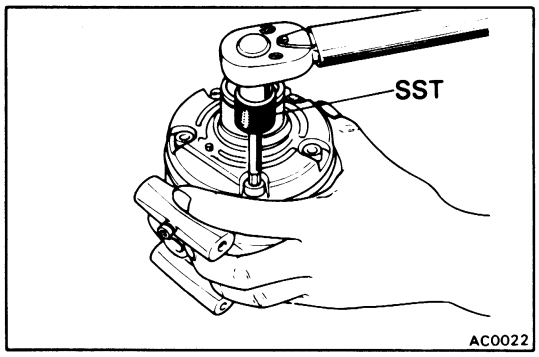

4. INSTALL FRONT HOUSING ON FRONT CYLINDER AND TIGHTEN FIVE THROUGH BOLTS

Using SST and torque wrench, gradually tighten the five through bolts in two or three passes.

SST 07110-61050

Torque: 260 kg-cm (19 ft-lb, 25 N·m)

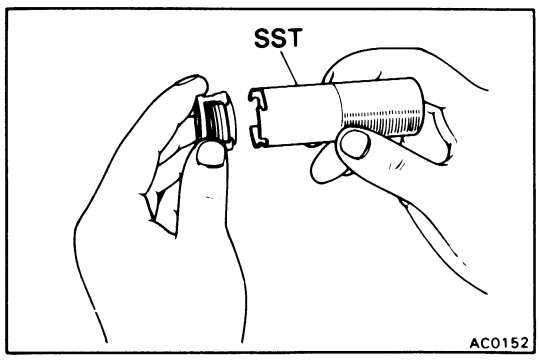

5. INSTALL SHAFT SEAL

(a) Fit the shaft seal onto SST.

SST 07114-15010

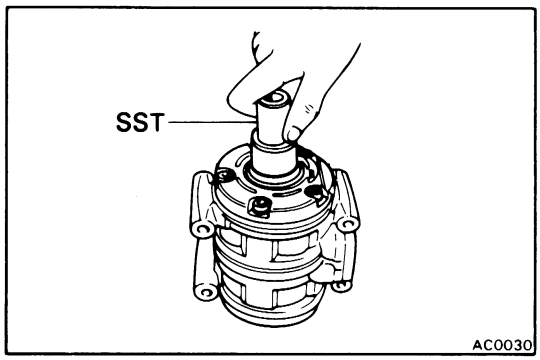

(b) Apply oil to the bore.

Insert SST, and turn it counterclockwise while lightly pressing in.
Then pull up the SST.

SST 07114-15010

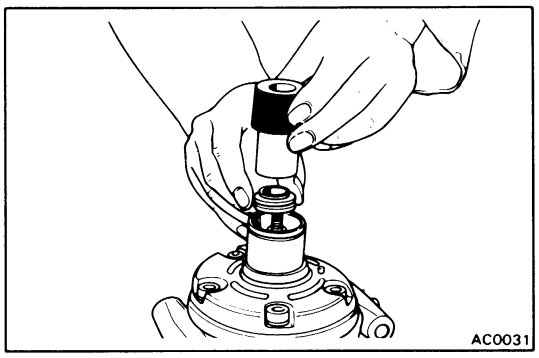

6. INSTALL SEAL PLATE

(a) Put in the seal plate.

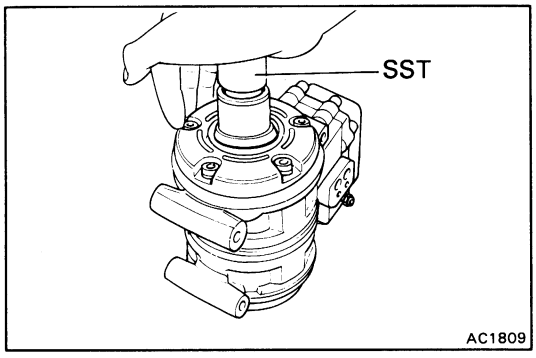

(b) Press in SST.

SST 07112-25010

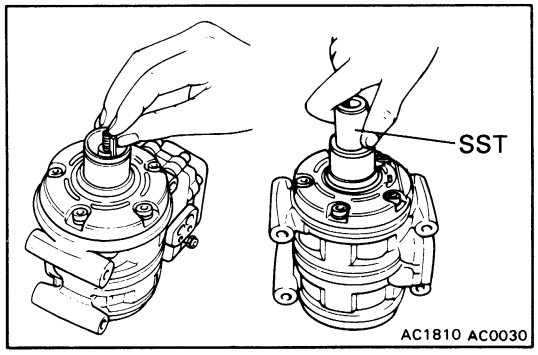

7. INSTALL KEY IN SHAFT GROOVE

Using SST and plastic hammer, tap the key lightly.

SST 07114-45010

Place the felt inside the bore.
(Refer to page AC-22)

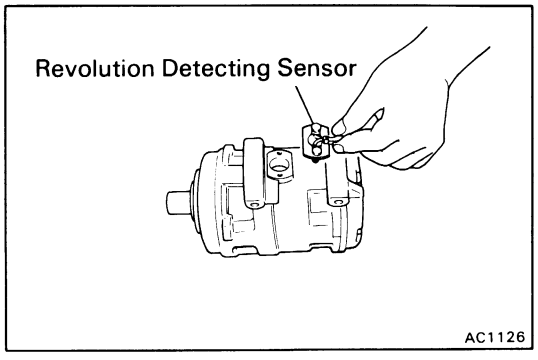

8. INSTALL REVOLUTION DETECTING SENSOR (4A-GZE ENGINE ONLY)

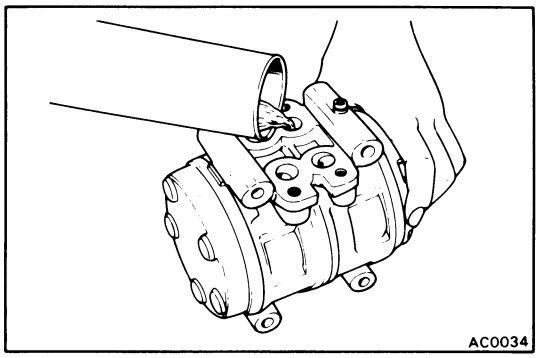

9. POUR COMPRESSOR OIL INTO COMPRESSOR

Add the same quantity of oil as was removed, plus 20 cc, into the compressor.

Compressor oil: DENSOOIL 6, SUNISO No. 5GS or equivalent

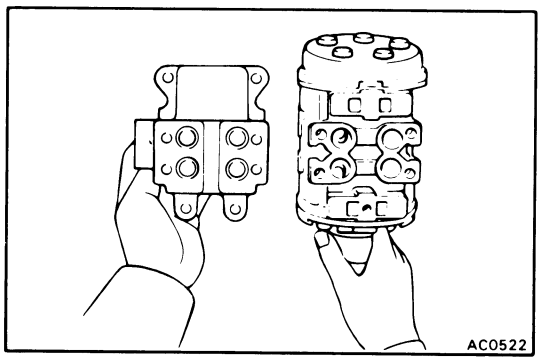

10. INSTALL SERVICE VALVE

(a) Lubricate new O-rings with compressor oil. Install the O-rings in the service valve.

(b) Install the service valve on the compressor. Using SST and torque wrench, tighten the bolts.

SST 07110-61050

Torque: 260 kg-cm (19 ft-lb, 25 N·m)

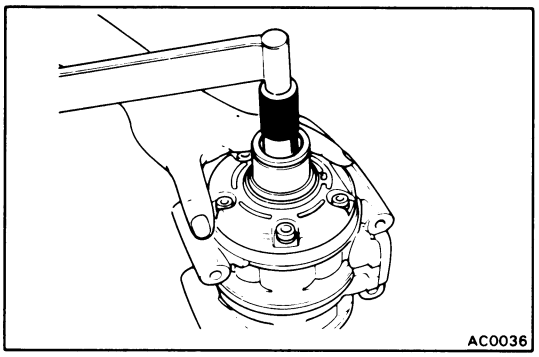

11. CHECK SHAFT STARTING TORQUE

Torque: 30 kg-cm (26 in.-lb, 2.9 N·m) or less

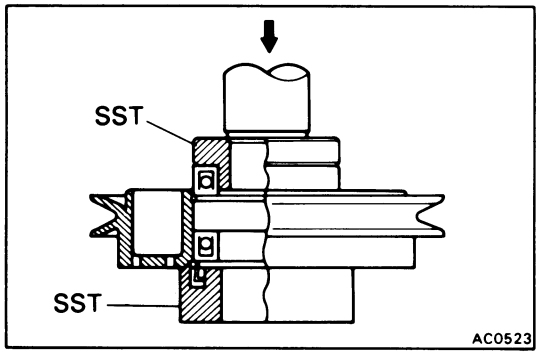

ASSEMBLY OF MAGNETIC CLUTCH

(See page AC-19, 20)

1. INSTALL TWO BEARINGS IN ROTOR

(a) Using SST, press a shield ring and two new bearings into the rotor boss until fully seated.

SST 07110-77011

(b) Install the bearing snap ring into the rotor groove.

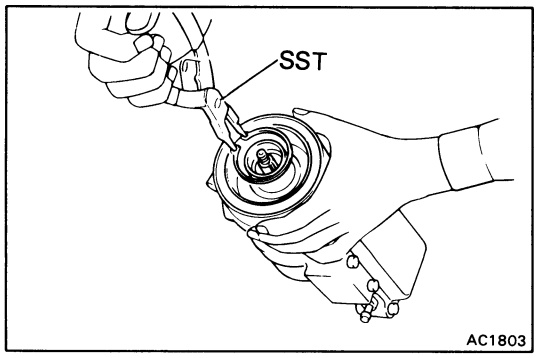

2. INSTALL STATOR

(a) Install the stator on the compressor.

(b) Using SST, install the new snap ring.

SST 07114-84020

(c) Connect the stator lead wires to the compressor housing.

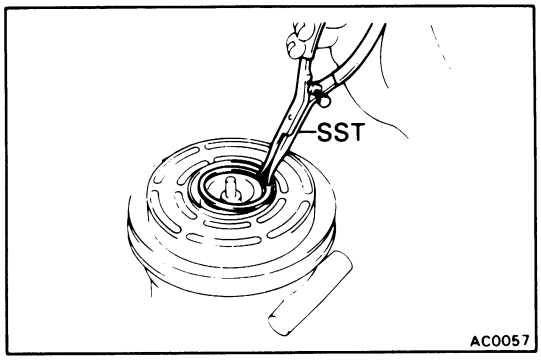

3. INSTALL ROTOR

(a) Install the rotor on the compressor shaft.

(b) Using SST, install the new snap ring.

SST 07114-84020

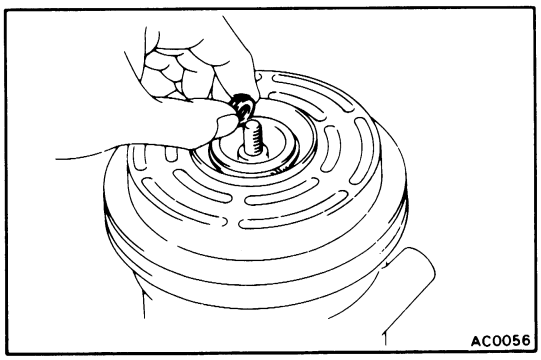

4. INSTALL PRESSURE PLATE

(a) Adjust the clearance between the pressure plate and rotor by installing shims on the compressor shaft.

Standard clearance: 0.4 – 0.7 mm (0.016 – 0.028 in.)

If the clearance is not within tolerance, change the number of shims to obtain the standard clearance.

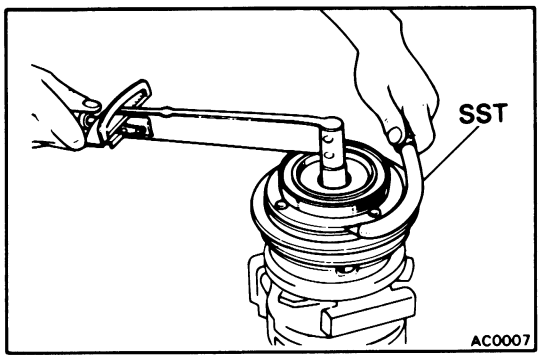

(b) Using SST and torque wrench, install the shaft nut.

SST 07110-77011

Torque: 165 kg-cm (12 ft-lb, 16 N·m)

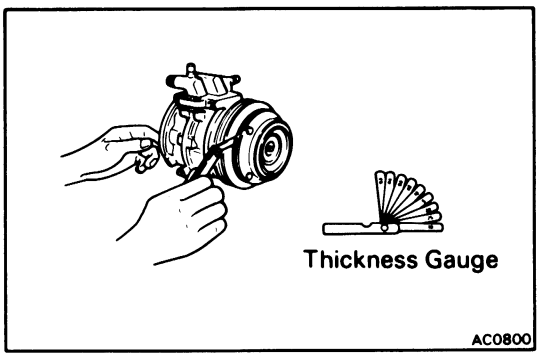

5. CHECK CLEARANCE OF MAGNETIC CLUTCH

Using thickness gauge, check the clearance between the pressure plate and rotor.

Standard clearance: 0.6 – 1.0 mm (0.024 – 0.039 in.)

If the clearance is not within tolerance, change the number of shims to obtain the standard clearance.

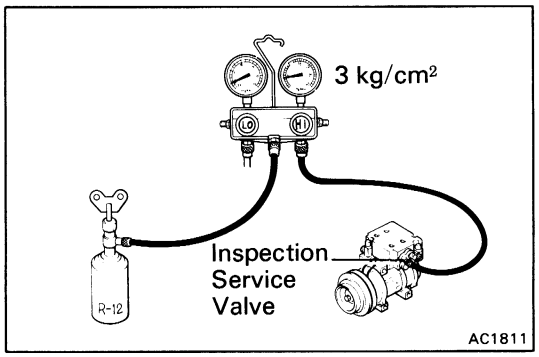

PERFORMANCE TEST OF COMPRESSOR

1. PERFORM GAS LEAKAGE TEST

(a) Install the inspection service valve on the service valve.

NOTE: Use only a TOYOTA supplied inspection service valve to perform the gas leakage test.

Part No.	Suction side	88376-17020
	Discharge side	88376-22020

(b) Charge the compressor with refrigerant through the charge valve until the pressure is 3 kg/cm² (43 psi, 294 kPa).

(c) Using a gas leak detector, check the compressor for leaks.

If leaks are found, check and replace the compressor.

2. EVACUATE COMPRESSOR AND CHARGE WITH REFRIGERANT

Make sure the caps are tight and the compressor is free from moisture and contamination.

NOTE: When storing a compressor for an extended period, charge the compressor with refrigerant or dry nitrogen gas to prevent corrosion.

INSTALLATION OF COMPRESSOR

(See page AC-22)

1. INSTALL COMPRESSOR WITH FOUR MOUNTING BOLTS

Torque: 280 kg-cm (20 ft-lb, 27 N·m)

2. INSTALL DRIVE BELT
(See step 2 and 3 on page AC-15)

3. CONNECT TWO HOSES TO COMPRESSOR

Torque:

Discharge line	**250 kg-cm (18 ft-lb, 25 N·m)**
Suction line	**250 kg-cm (18 ft-lb, 25 N·m)**

4. CONNECT CLUTCH LEAD WIRE TO WIRING HARNESS

5. PLACE BATTERY

6. CONNECT CABLES TO BATTERY

7. EVACUATE AIR FROM AIR CONDITIONING SYSTEM

8. CHARGE AIR CONDITIONING SYSTEM WITH REFRIGERANT AND CHECK FOR GAS LEAKAGE

Specified amount: 800 g (1.8 lb)

RECEIVER

ON-VEHICLE INSPECTION

CHECK SIGHT GLASS, FUSIBLE PLUG AND FITTING FOR LEAKAGE

Use a gas leak detector. Repair as necessary.

REMOVAL OF RECEIVER

(See page AC-7)

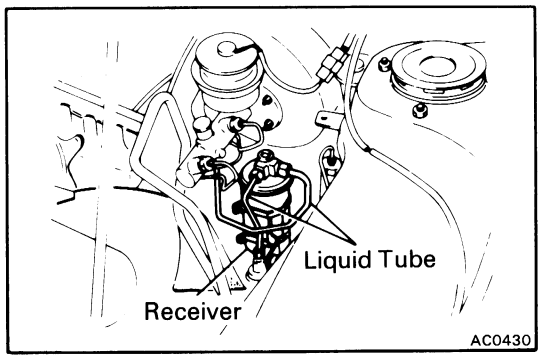

1. **DISCHARGE REFRIGERATION SYSTEM**
2. **REMOVE SPARE TIRE AND TRIM COVER**
3. **DISCONNECT TWO LIQUID TUBES FROM RECEIVER**

   NOTE: Cap the open fittings immediately to keep moisture out of the system.
4. **REMOVE RECEIVER FROM RECEIVER HOLDER**

INSTALLATION OF RECEIVER

(See page AC-7)

1. **INSTALL RECEIVER IN RECEIVER HOLDER**

   NOTE: Do not remove the blind plugs until connecting the liquid tubes to the receiver.
2. **CONNECT TWO LIQUID TUBES TO RECEIVER**

   Torque: 135 kg-cm (10 ft-lb, 13 N·m)
3. **INSTALL TRIM COVER AND SPARE TIRE**
4. **IF RECEIVER WAS REPLACED, ADD COMPRESSOR OIL TO COMPRESSOR**

   Add 20 cc (0.7 fl.oz.)

   Compressor oil: DENSOOIL 6, SUNISO No. 5GS or equivalent
5. **EVACUATE AIR FROM AIR CONDITIONING SYSTEM**
6. **CHARGE AIR CONDITIONING SYSTEM WITH REFRIGERANT AND CHECK FOR GAS LEAKAGE**

   Specified amount: 800 g (1.8 lb)

CONDENSER

ON-VEHICLE INSPECTION

1. **CHECK CONDENSER FINS FOR BLOCKAGE OR DAMAGE**

   If the fins are clogged, wash them with water and dry with compressed air.

   CAUTION: Be careful not to damage the fins.

   If the fins are bent, straighten them with a screwdriver or pliers.
2. **CHECK CONDENSER FITTINGS FOR LEAKAGE**

   Repair as necessary.

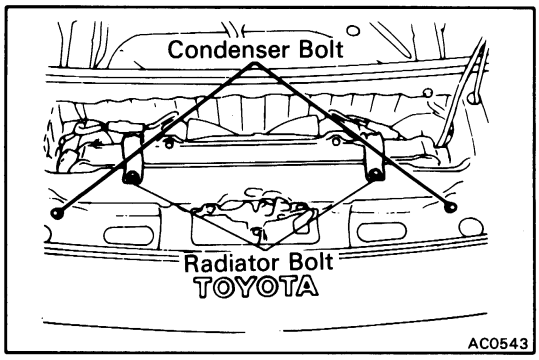

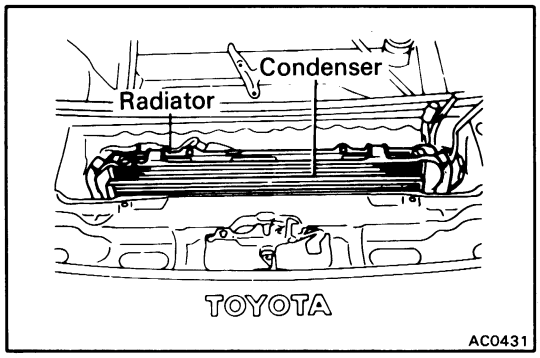

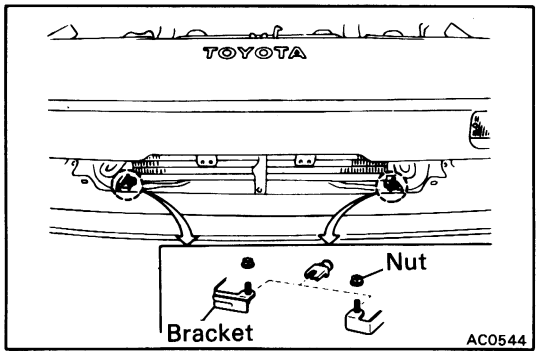

REMOVAL OF CONDENSER

(See page AC-7)

1. **DISCHARGE REFRIGERATION SYSTEM**
2. **REMOVE FRONT GRILLE AND FRONT UNDER COVER**
3. **REMOVE TWO UPPER CONDENSER BOLTS**
4. **REMOVE TWO UPPER RADIATOR BOLTS**

   Remove the two upper radiator bolts, after removing the bolts, lean the radiator back.
5. **DISCONNECT DISCHARGE TUBE AND DISCHARGE TUBE CLAMP FROM CONDENSER INLET FITTING**
6. **DISCONNECT LIQUID TUBE AND LIQUID TUBE CLAMP FROM CONDENSER OUTLET FITTING**

   NOTE: Cap the open fittings immediately to keep moisture out of the system.
7. **REMOVE CONDENSER**

   Remove the two lower condenser nuts and condenser.

INSTALLATION OF CONDENSER

(See page AC-7)

1. **INSTALL CONDENSER**

   Install the two lower condenser nuts, making sure the rubber cushions fit on the mounting flanges correctly.
2. **CONNECT LIQUID TUBE, DISCHARGE TUBE AND TWO CLAMPS TO CONDENSER**

   Torque:

Liquid tube	**135 kg-cm (10 ft-lb, 13 N·m)**
Discharge tube	**185 kg-cm (13 ft-lb, 18 N·m)**
3. **INSTALL TWO UPPER CONDENSER BOLTS**
4. **INSTALL TWO UPPER RADIATOR BOLTS**
5. **INSTALL FRONT GRILLE AND UNDER COVER**
6. **IF CONDENSER WAS REPLACED, ADD COMPRESSOR OIL TO COMPRESSOR**

   Add 40 — 50 cc (1.4 — 1.7 fl.oz.)

   Compressor oil: DENSOOIL 6, SUNISO No. 5GS or equivalent
7. **EVACUATE AIR FROM AIR CONDITIONING SYSTEM**
8. **CHARGE AIR CONDITIONING SYSTEM WITH REFRIGERANT AND CHECK FOR GAS LEAKAGE**

   Specified amount: 800 g (1.8 lb)

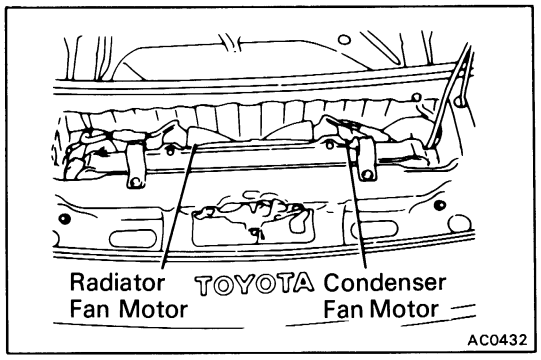

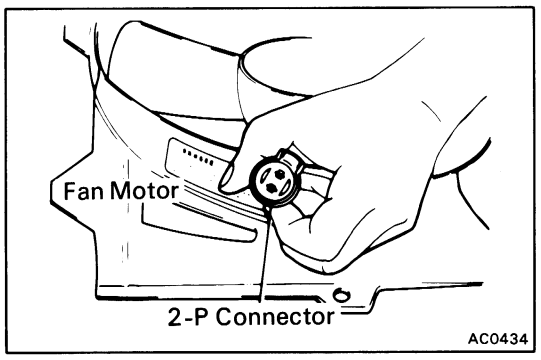

CONDENSER FAN MOTOR

INSPECTION OF FAN MOTORS

1. INSPECT FAN MOTORS

(a) Disconnect 2-P connector of the fan motor.

(b) Using the wire harness, apply battery voltage to the connector.

(c) Confirm smooth rotation of the motor within the specified current flow.

Standard current: 6.7 ± 0.7 A

If current is not as specified, replace the motor.

2. CHECK OPERATION OF FAN MOTOR

NOTE: The fan motor operates at two speeds depending on the water temperature and the A/C switch.

A/C switch	Magnetic clutch	Water temperature	Fan motor speed
OFF or ON	OFF	85°C (185°F) or below	OFF
		85 to 90°C (185 to 194°F)	LO
		90°C (194°F) or above	HI
ON	ON	85°C (194°F) or below	LO
		90°C (194°F) or above or the refrigerant pressure is over 15.5 kg/cm² (220 psi, 1,520 kPa)	HI

(Example) A/C Switch: ON Magnet Clutch: ON Water Temperature: 85°C (194°F) or below
Fan Motor Speed: LO

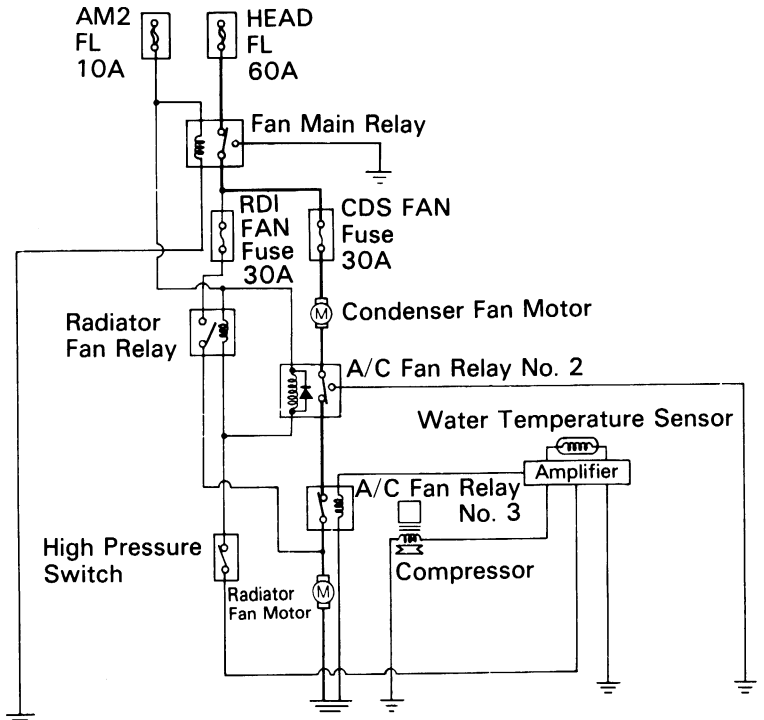

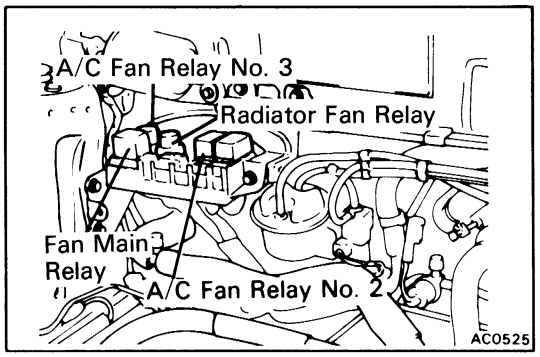

RELAYS

INSPECTION OF RELAYS

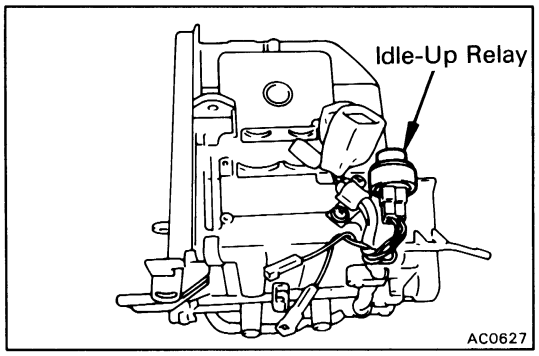

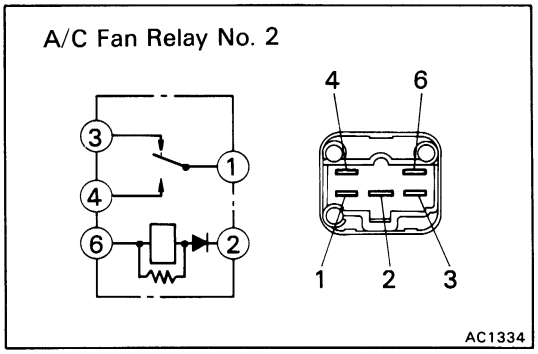

INSPECT RELAY COTINUITY

(A/C Fan Relay No. 2)

Terminal / Condition	1	2	3	4	6
Constant	○	○	○	◀	○
Apply battery voltage to terminal 6(+) and 2(−)	○			○	

If continuity is not as specified, replace the relay.

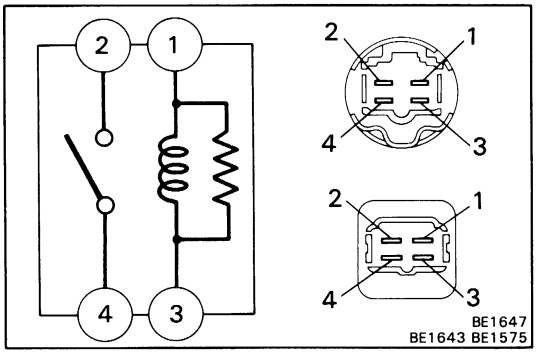

(A/C Fan Relay No. 3)

Terminal / Condition	1	2	3	4
Constant	○	○	○	
Apply battery voltage to terminal 1 and 3		○		○

If continuity is not as specified, replace the relay.

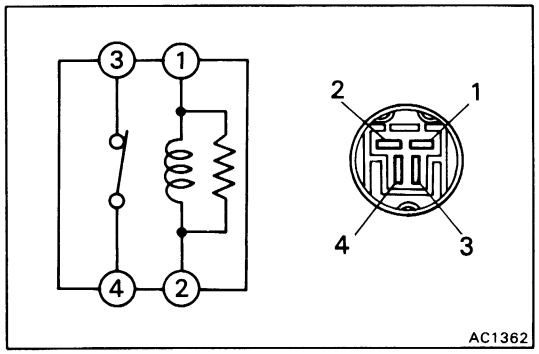

(Idle-up Relay)

Terminal / Condition	1	2	3	4
Constant	○	○	○	○
Apply battery voltage to terminal 1 and 2				

If continuity is not as specified, replace the relay.

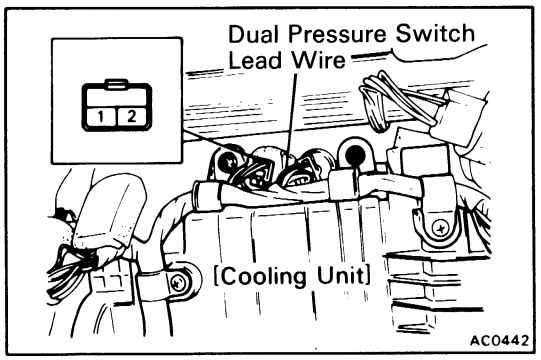

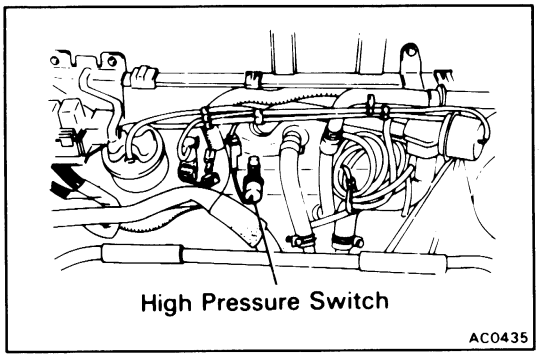

PRESSURE SWITCH

(See page AC-7)

ON-VEHICLE INSPECTION

1. DISCONNECT CONNECTOR OF PRESSURE SWITCH

2. INSPECT PRESSURE SWITCH

(a) Install the manifold gauge set.

(b) Observe the gauge reading.

(c) Check the continuity between the two terminals of the pressure switch shown in the below.

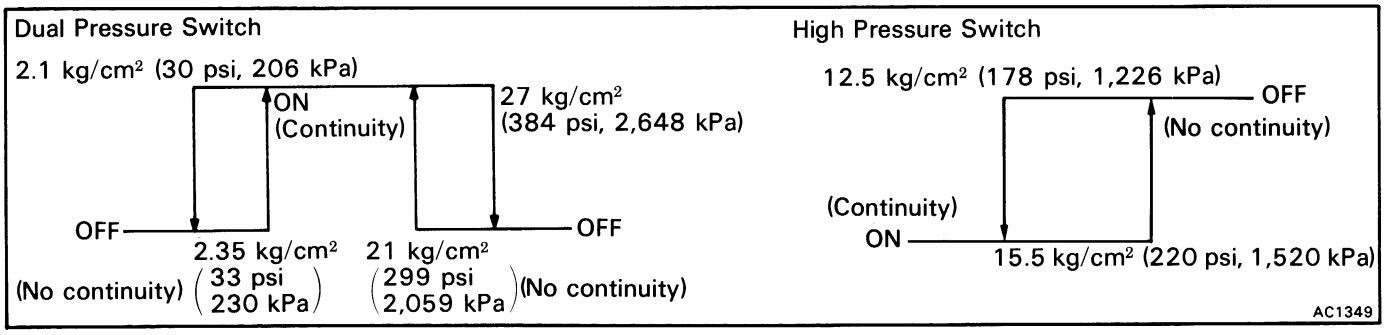

If defective, replace the pressure switch.

3. CONNECT CONNECTOR OF PRESSURE SWITCH

WATER TEMPERATURE SENSOR

INSPECTION OF TEMPERATURE SENSOR

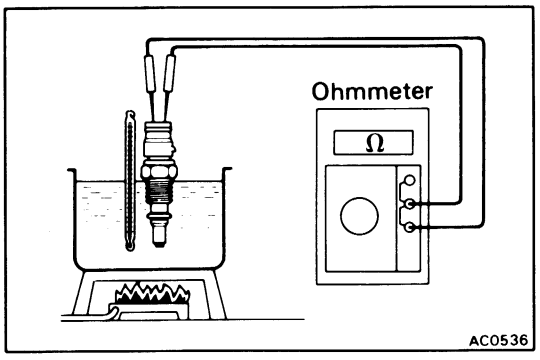

INSPECT WATER TEMPERATURE SENSOR

Using an ohmmeter, measure the resistance of the water temperature sensor.

Water temperature	Resistance
85°C (185°F)	approx. 1.35 kΩ
90°C (194°F)	approx. 1.19 kΩ
95°C (203°F)	approx. 1.05 kΩ

If resistance value is not as specified, replace the sensor.

COOLING UNIT

(See page AC-7)

ON-VEHICLE INSPECTION OF EXPANSION VALVE

1. **CHECK QUANTITY OF REFRIGERANT GAS DURING REFRIGERATION CYCLE**

2. **INSTALL MANIFOLD GAUGE SET**
   (See page AC-16)

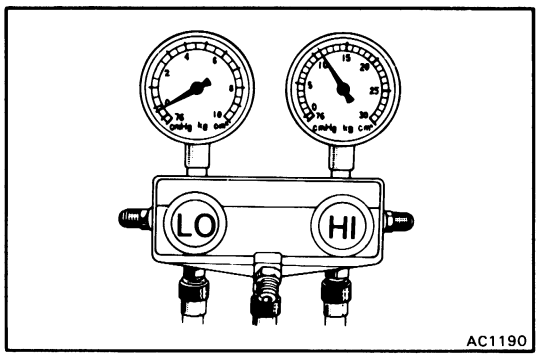

3. **RUN ENGINE**

   Run the engine at 2,000 rpm at least 5 minutes.

4. **CHECK EXPANSION VALVE**

   If the expansion valve is clogged,the low pressure reading will drop to 0 kg/cm² (0 psi, 0 kPa), otherwise it is OK.

REMOVAL OF COOLING UNIT

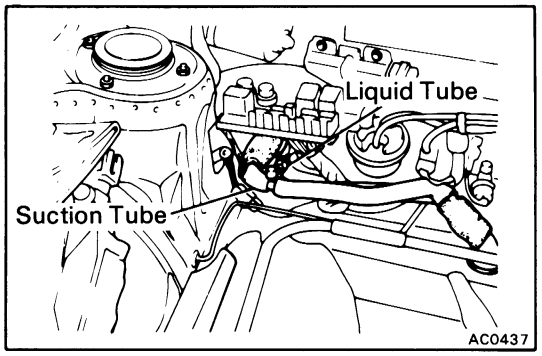

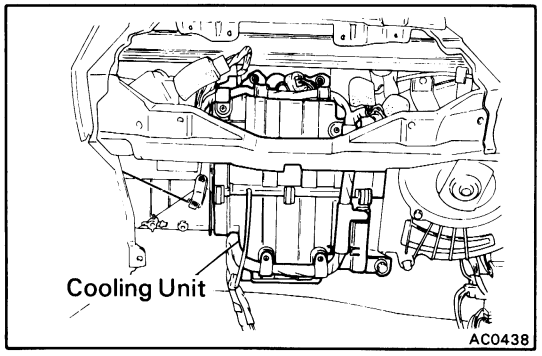

1. **DISCONNECT NEGATIVE CABLE FROM BATTERY**

2. **DISCHARGE REFRIGERATION SYSTEM**

3. **DISCONNECT SUCTION TUBE FROM COOLING UNIT OUTLET FITTING**

4. **DISCONNECT LIQUID TUBE FROM COOLING UNIT INLET FITTING**

   NOTE: Cap the open fittings immediately to keep moisture out of the system.

5. **REMOVE GROMMETS FROM INLET AND OUTLET FITTINGS**

6. **REMOVE GLOVE BOX AND UNDER COVER**

7. **DISCONNECT CONNECTORS**

8. **REMOVE COOLING UNIT**

   Remove two nuts and four screws.

DISASSEMBLY OF COOLING UNIT

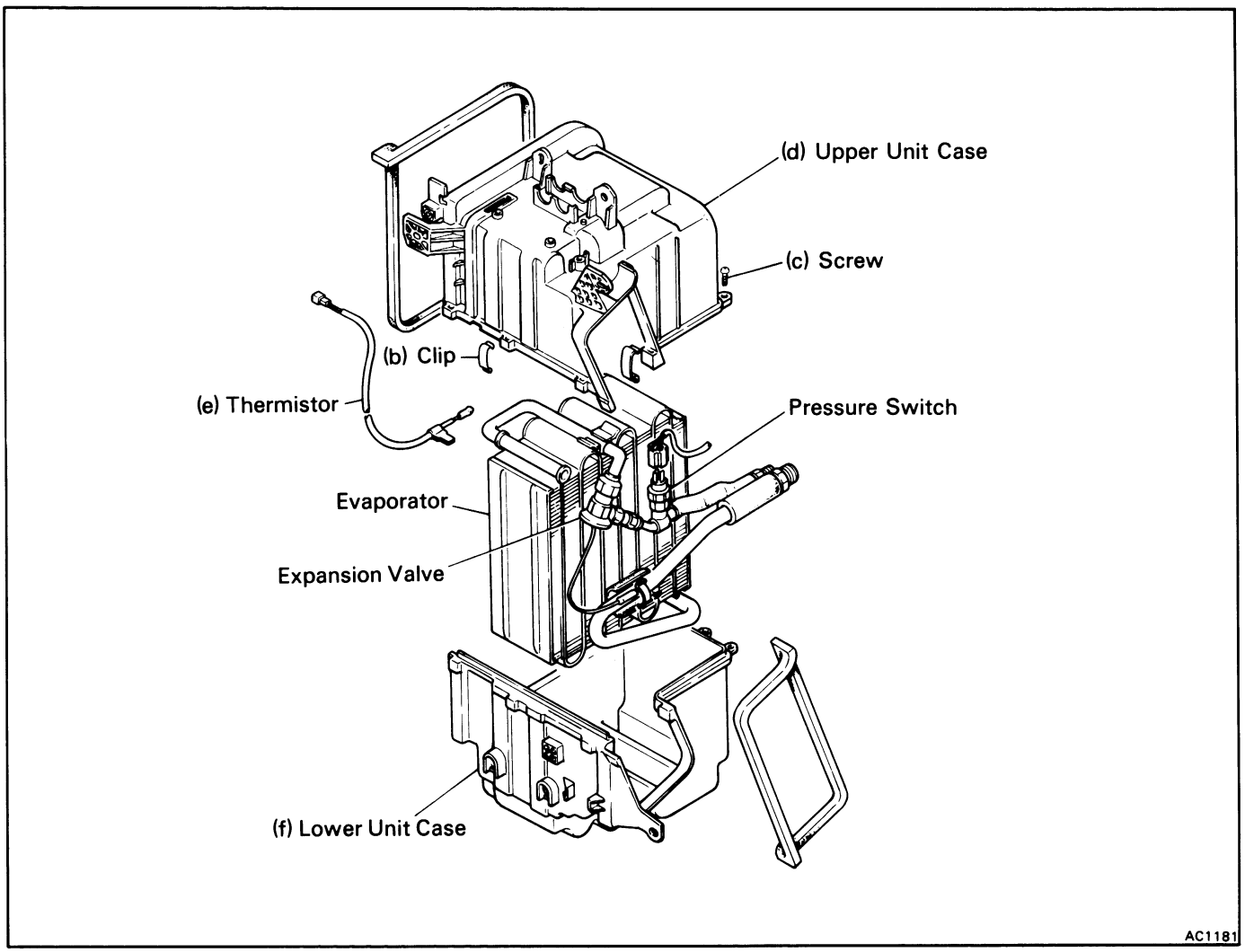

1. REMOVE LOWER AND UPPER UNIT CASES

(a) Disconnect connectors.

(b) Remove four clips.

(c) Remove four screws.

(d) Remove upper unit case.

(e) Remove thermistor with thermistor holder.

(f) Remove lower unit case.

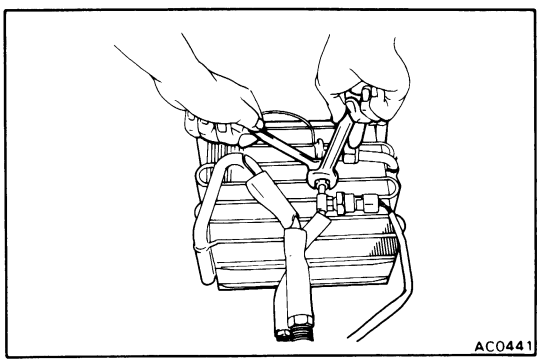

2. REMOVE EXPANSION VALVE

(a) Disconnect the liquid tube from the inlet fitting of the expansion valve.

(b) Remove the packing and heat sensing tube from suction tube of evaporator.

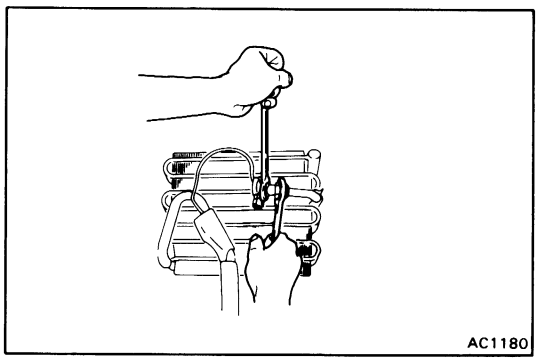

(c) Remove the expansion valve.

Evaporator

INSPECTION OF EVAPORATOR

1. CHECK EVAPORATOR FINS FOR BLOCKAGE

If the fins are clogged, clean them with compressed air.

CAUTION: Never use water to clean the evaporator.

2. CHECK FITTINGS FOR CRACKS OR SCRATCHES

Repair as necessary.

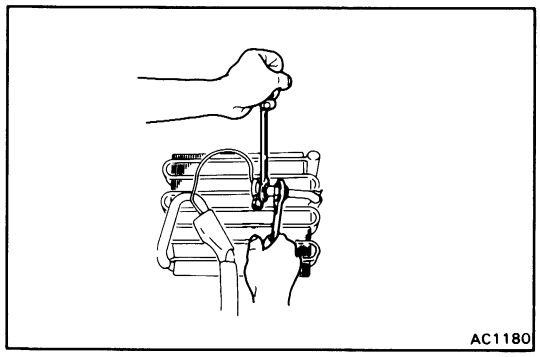

ASSEMBLY OF COOLING UNIT

INSTALL COMPONENTS ON EVAPORATOR

(a) Connect the expansion valve to the inlet fitting of the evaporator. Torque the nut.

Torque: 235 kg-cm (17 ft-lb, 23 N·m)

NOTE: Be sure that the O-rings are positioned on the tube fitting.

(b) Install the holder to the suction tube with heat sensitizing tube.

(c) Connect the liquid tube to the inlet fitting of the expansion valve. Torque the nut.

Torque: 135 kg-cm (10 ft-lb, 13 N·m)

(d) Install lower unit case to the evaporator.

(e) Install thermistor to the evaporator.

(f) Install upper unit case.

(g) Install four screws.

(h) Install four clips.

(i) Connect connectors.

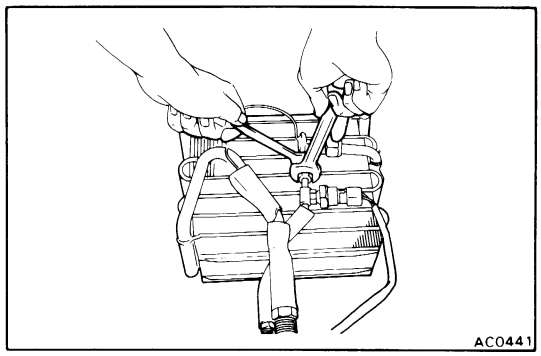

INSTALLATION OF COOLING UNIT

1. INSTALL COOLING UNIT

Install the cooling unit with two nuts and four screws.

2. CONNECT CONNECTORS

3. INSTALL GLOVE BOX AND UNDER COVER

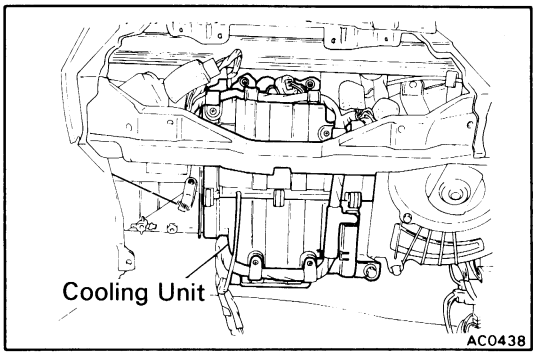

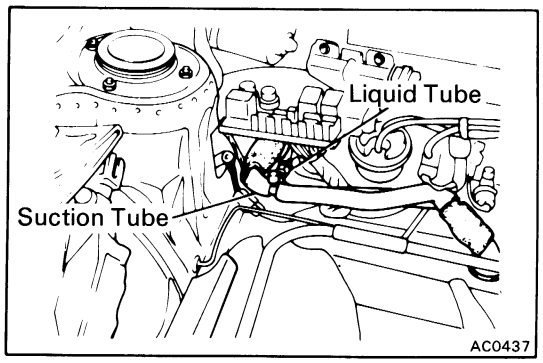

4. **INSTALL GROMMETS ON INLET AND OUTLET FITTINGS**

5. **CONNECT LIQUID TUBE TO COOLING UNIT INLET FITTING**

   Torque the nut.

   Torque: 135 kg-cm (10 ft-lb, 13 N·m)

6. **CONNECT SUCTION TUBE TO COOLING UNIT OUTLET FITTING**

   Torque the nut.

   Torque: 325 kg-cm (24 ft-lb, 32 N·m)

7. **IF EVAPORATOR WAS REPLACED, ADD COMPRESSOR OIL TO COMPRESSOR**

   Add 40 — 50 cc (1.4 — 1.7 fl.oz.)

   Compressor oil: DENSOOIL 6, SUNISO No. 5GS or equivalent

8. **CONNECT NEGATIVE CABLE TO BATTERY**

9. **EVACUATE AIR FROM AIR CONDITIONING SYSTEM**

10. **CHARGE AIR CONDITIONING SYSTEM WITH REFRIGERANT AND CHECK FOR GAS LEAKAGE**

    Specified amount: 800 g (1.8 lb)

REFRIGERANT LINES

(See page AC-7)

ON-VEHICLE INSPECTION

1. **INSPECT HOSES AND TUBES FOR LEAKAGE**

   Use a gas leak detector. Replace, if necessary.

2. **CHECK THAT HOSE AND TUBE CLAMPS ARE NOT LOOSE**

   Tighten or replace as necessary.

REPLACEMENT OF REFRIGERANT LINES

1. **DISCHARGE REFRIGERATION SYSTEM**

2. **REPLACE FAULTY TUBE OR HOSE**

   NOTE: Cap the open fittings immediately to keep moisture out of the system.

3. **TIGHTENING TORQUE FOR O-RING FITTINGS AND BOLTED TYPE FITTING (See page AC-7)**

4. **EVACUATE AIR FROM AIR CONDITIONING SYSTEM**

5. **CHARGE AIR CONDITIONING SYSTEM WITH REFRIGERANT AND CHECK ON GAS LEAKAGE**

   Specified amount: 800 g (1.8 lb)

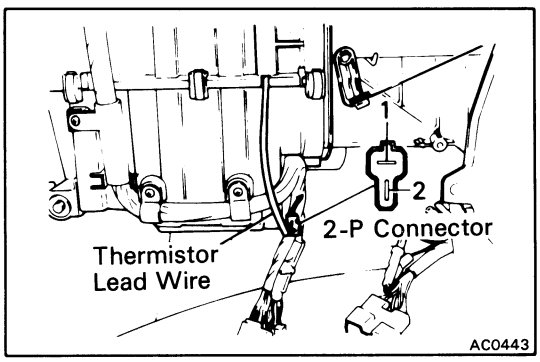

THERMISTOR

ON-VEHICLE INSPECTION

1. **DISCONNECT NEGATIVE BATTERY CABLE**
2. **REMOVE GLOVE BOX**
3. **CHECK RESISTANCE OF THERMISTOR**

   Measure the resistance between terminals.

   Standard resistance: 1,500 Ω at 25°C (77°F)

   If resistance value is not as specified, replace the thermistor.

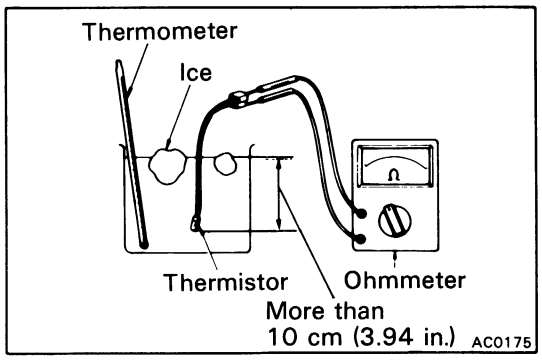

REMOVAL AND INSPECTION OF THERMISTOR

1. **REMOVE AND DISASSEMBLE COOLING UNIT (See page AC-37)**
2. **REMOVE THERMISTOR FROM EVAPORATOR**
3. **CHECK THERMISTOR OPERATION**

   (a) Place the thermistor in cold water. While varying the temperature of the water, measure the resistance at the connector and at the same time, measure the temperature of the water with a thermometer.

   (b) Compare the two readings on the chart.

   If the intersection is not between the two lines, replace the thermistor.

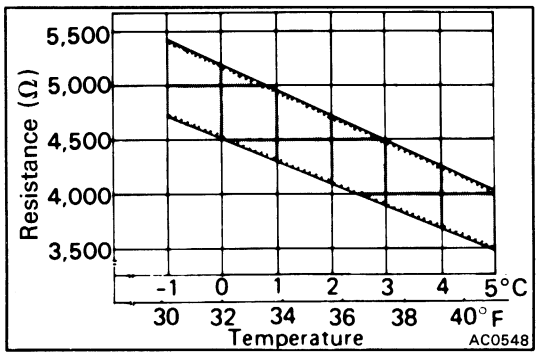

INSTALLATION OF THERMISTOR

1. **INSTALL THERMISTOR TO EVAPORATOR**
2. **ASSEMBLE AND INSTALL COOLING UNIT**

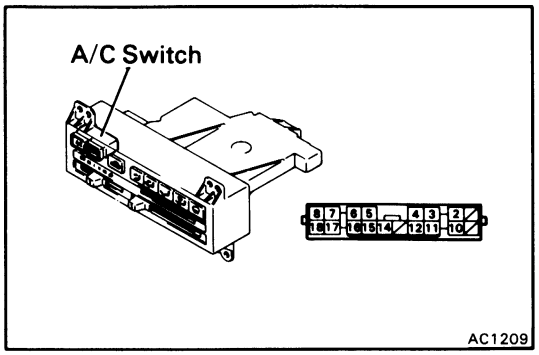

A/C SWITCH

(See page AC-7)

INSPECTION OF SWITCH

INSPECT SWITCH CONTINUITY

Inspect continuity between the terminals.

Terminal / Switch position	2	4	10	15
A/C				
ECONO				

If continuity is not as specified, replace the switch.

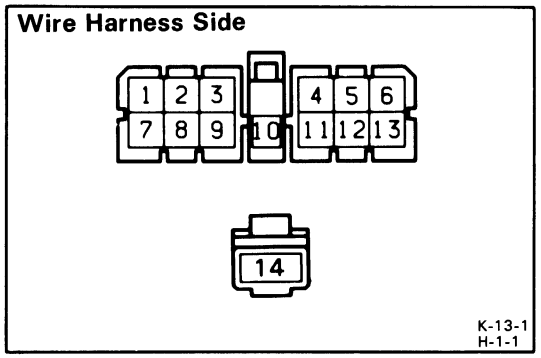

AIR CONDITIONER AMPLIFIER

INSPECTION OF AMPLIFIER

INSPECT AMPLIFIER CIRCUIT

Disconnect the amplifier and inspect the connector on the wire harness side as shown in the chart below.

Test conditions:
(1) Ignition switch: ON
(2) Temperature control lever: MAX COOL
(3) Blower fan speed control switch: HI

(4A-GE E/G Model)

Check for	Tester connection	Condition	Specified value
Continuity	5 – Ground	Constant	Continuity
	7 – Ground	Constant	Continuity
	10 – Ground	Constant	Continuity
Voltage	1 – 10	Turn ignition switch on.	Battery voltage
		Turn ignition switch off.	No voltage
	2 – 10	Turn A/C switch on.	Battery voltage
		Turn A/C switch off.	No voltage
	4 – 10	Turn ignition switch on.	Battery voltage
		Turn ignition switch off.	No voltage
	6 – 10	Turn ignition switch on.	Battery voltage
		Turn ignition switch off.	No voltage
	8 – 10	Turn ignition switch on.	Battery voltage
		Turn ignition switch off.	No voltage
	13 – 10	Start the engine.	Approx. 10 to 14 V
		Stop the engine.	No voltage
	14 – 10	Turn ECONO switch on.	Battery voltage
		Turn ECONO switch off.	No voltage
Resistance	9 – 3	Constant	Approx. 4.5 kΩ
	12 – 11	Constant	Approx. 1.5 kΩ at 25°C (77°F)

If circuit is correct, replace the amplifier.

Wire Harness Side

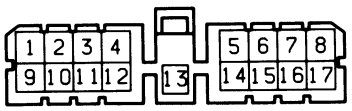

K-17-1

(4A-GZE E/G Model)

Check for	Tester connection	Condition	Specified value
Continuity	4 – Ground	Constant	Continuity
	10 – Ground	Constant	Continuity
	11 – Ground	Constant	Continuity
	13 – Ground	Constant	Continuity
	15 – Ground	Constant	Continuity
Voltage	2 – 13	Turn ignition switch on.	Battery voltage
		Turn ignition switch off.	No voltage
	3 – 13	Turn A/C switch on.	Battery voltage
		Turn A/C switch off.	No voltage
	3 – 13	Turn ECONO switch on.	Battery voltage
		Turn ECONO switch off.	No voltage
	5 – 13	Turn ignition switch on.	Battery voltage
		Turn ignition switch off.	No voltage
	6 – 13	Start the engine.	Approx. 10 to 14 V
		Stop the engine.	No voltage
	8 – 13	Turn A/C switch on.	Battery voltage
		Turn A/C switch off.	No voltage
	9 – 13	Turn ignition switch on.	Battery voltage
		Turn ignition switch off.	No voltage
	14 – 13	Turn ignition switch on.	Battery voltage
		Turn ignition switch off.	No voltage
	16 – 13	Turn ECONO switch on.	Battery voltage
		Turn ECONO switch off.	No voltage
Resistance	1 – 13	Constant	Approx. 4.5 kΩ
	7 – 17	Constant	Approx. 1.5 kΩ at 25°C (77°F)

If circuit is correct, replace the amplifier.

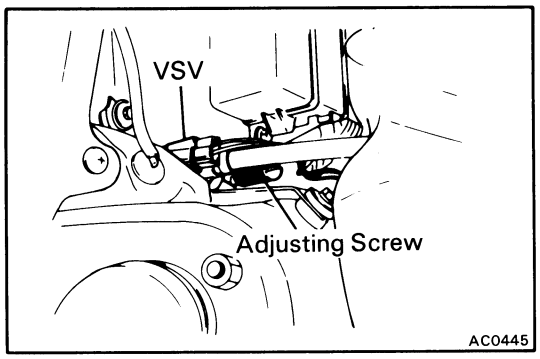

VACUUM SWITCHING VALVE (VSV)

(See page AC-7)

INSPECTION OF VSV

1. REMOVE VSV

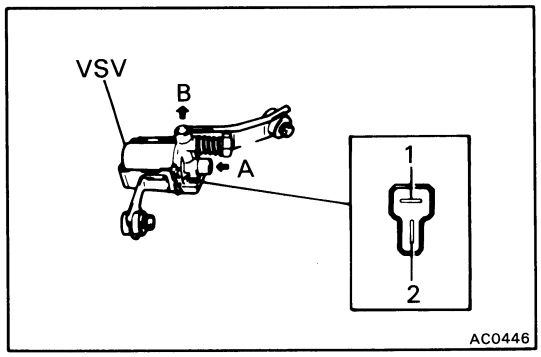

2. CHECK VACUUM CIRCUIT CONTINUITY

(a) Blow into pipe "A" and check that air does not come out of pipe "B".

(b) Apply battery voltage (12 V) between the terminals 1 and 2.

(c) Blow into pipe "A" and check that air comes out of pipe "B".

If a problem is found, replace the VSV.

SERVICE SPECIFICATIONS

	Page
MAINTENANCE	A-2
ENGINE MECHANICAL	A-3
SUPERCHARGER SYSTEM	A-6
EFI SYSTEM	A-7
COOLING SYSTEM	A-12
LUBRICATION SYSTEM	A-12
IGNITION SYSTEM	A-13
STARTING SYSTEM	A-13
CHARGING SYSTEM	A-13
CLUTCH	A-14
MANUAL TRANSAXLE	A-15
AUTOMATIC TRANSAXLE	A-22
FRONT AXLE AND SUSPENSION	A-27
REAR AXLE AND SUSPENSION	A-28
BRAKE SYSTEM	A-29
STEERING	A-30
BODY	A-31
LUBRICANT	A-32

MAINTENANCE

Engine

Drive belt tension					
w/ Borroughs drive belt tension gauge No. BT-33-73F or Nippondenso BTG-20 (95506-00020)					
4A-GE	Alternator	New belt	175 ± 5 lb		
		Used belt	115 ± 20 lb		
	A/C	New belt	160 ± 20 lb		
		Used belt	105 ± 10 lb		
4A-GZE	Alternator				
	w/ Air con.	New belt	165 ± 10 lb		
		Used belt	85 ± 15 lb		
	w/o Air con.	New belt	175 ± 5 lb		
		Used belt	115 ± 20 lb		
	Supercharger	New belt	175 ± 5 lb		
		Used belt	115 ± 20 lb		
Coolant capacity w/ heater or air conditioner					
	M/T	w/ heater	12.2 liters	12.9 US qts	10.7 Imp. qts
		Others	12.4 liters	13.1 US qts	10.9 Imp. qts
	A/T		12.9 liters	13.6 US qts	11.4 Imp. qts
Engine oil capacity	Drain and refill				
	w/ Oil cooler				
	w/ Oil filter change		3.4 liters	3.6 US qts	3.0 Imp. qts
	w/o Oil cooler				
	w/ Oil filter change		3.3 liters	3.5 US qts	2.9 Imp. qts
Spark plug					
Type	4A-GE	ND	PQ16R		
		NGK	BCPR5EP11		
	4A-GZE	ND	PQ20R		
		NGK	BCPR6EP11		
Gap			1.1 mm	0.043 in.	
Firing order			1 – 3 – 4 – 2		
Valve clearance (cold)		Intake	0.15 – 0.25 mm	0.006 – 0.010 in.	
		Exhaust	0.20 – 0.30 mm	0.008 – 0.012 in.	
Idle speed			800 rpm		

Chassis

Front brake			
Pad thickness	Limit	3.0 mm	0.118 in.
Disc thickness	Limit	21.0 mm	0.827 in.
Disc runout	Limit	0.13 mm	0.0051 in.
Rear brake			
Pad thickness	Limit	1.0 mm	0.039 in.
Disc thickness	Limit	9.0 mm	0.354 in.
Disc runout	Limit	0.15 mm	0.0059 in.
Front axle and suspension			
Ball joint vertical play	Limit	0 mm	0 in.
Steering wheel freeplay		Max. 30 mm (1.18 in.)	

Chassis (Cont'd)

Torque specifications:			
Front seat mounting bolt	375 kg-cm	27 ft-lb	37 N·m
Front strut bar bracket x Body	590 kg-cm	43 ft-lb	58 N·m
Rear suspension arm bracket x Body	590 kg-cm	43 ft-lb	58 N·m

ENGINE MECHANICAL

Specifications

Cylinder head	Warpage	Cylinder block side	Limit	0.05 mm	0.0020 in.
		Intake manifold side	Limit	0.05 mm	0.0020 in.
		Exhaust manifold side	Limit	0.10 mm	0.0039 in.
	Valve guide bushing bore		STD	11.000 – 11.027 mm	0.4331 – 0.4341 in.
			O/S 0.05	11.050 – 11.077 mm	0.4350 – 0.4361 in.
	Valve seat	Refacing angle		30°, 45°, 60°	
		Contacting angle		45°	
		Contacting width		1.0 – 1.4 mm	0.039 – 0.055 in.
Valve guide bushing	Inside diameter			6.01 – 6.03 mm	0.2366 – 0.2374 in.
	Outside diameter		STD	11.033 – 11.044 mm	0.4344 – 0.4348 in.
			O/S 0.05	11.083 – 11.094 mm	0.4363 – 0.4368 in.
	Replacing temperature (Cylinder head side)			80 – 100°C	176 – 212°F
Valve	Valve overall length	STD	Intake	99.60 mm	3.9213 in.
			Exhaust	99.75 mm	3.9272 in.
		Limit	Intake	99.10 mm	3.9016 in.
			Exhaust	99.25 mm	3.9075 in.
	Valve face angle			44.5°	
	Stem diameter		Intake	5.970 – 5.985 mm	0.2350 – 0.2356 in.
			Exhaust	5.965 – 5.980 mm	0.2348 – 0.2354 in.
	Stem oil clearance	STD	Intake	0.025 – 0.060 mm	0.0010 – 0.0024 in.
			Exhaust	0.030 – 0.065 mm	0.0012 – 0.0026 in.
		Limit	Intake	0.08 mm	0.0031 in.
			Exhaust	0.10 mm	0.0039 in.
	Margin thickness	STD		0.8 – 1.2 mm	0.031 – 0.047 in.
		Limit		0.5 mm	0.020 in.
Valve spring	Free length			41.09 mm	1.6177 in.
	Installed tension at 34.7 mm (1.366 in.)			14.6 – 17.0 kg	
				(32.2 – 37.5 lb, 143 – 167 N)	
	Squareness		Limit	1.8 mm	0.071 in.
Valve lifter	Outer diameter		STD	27.975 – 27.985 mm	1.1014 – 1.1018 in.
	Oil clearance		STD	0.015 – 0.046 mm	0.0006 – 0.0018 in.
			Limit	0.10 mm	0.0039 in.
Manifold	Warpage	Intake manifold	Limit	0.05 mm	0.0020 in.
		Exhaust manifold	Limit	0.30 mm	0.0118 in.
Air control valve	Warpage (4A-GE only)		Limit	0.05 mm	0.0020 in.

Specifications (Cont'd)

Timing belt	Timing belt deflection			4 mm at 2 kg (0.16 in. at 4.4 lb, 20 N)	
	Tension spring	Free length		43.5 mm	1.713 in.
		Installed load		9.97 kg at 50.2 mm (22.0 lb, 98 N at 1.976 in.)	
Camshaft	Thrust clearance		STD	0.08 – 0.19 mm	0.0031 – 0.0075 in.
			Limit	0.30 mm	0.0118 in.
	Journal oil clearance		STD	0.035 – 0.072 mm	0.0014 – 0.0028 in.
			Limit	0.10 mm	0.0039 in.
	Journal diameter		STD	26.949 – 26.965 mm	1.0610 – 1.0616 in.
	Circle runout		Limit	0.04 mm	0.0016 in.
	Cam lobe height		STD	35.410 – 35.510 mm	1.3823 – 1.3980 in.
			Limit	35.11 mm	1.3823 in.
Cylinder block	Cylinder head surface warpage		Limit	0.05 mm	0.0020 in.
	Cylinder bore diameter				
	STD	STD	Mark 1	81.00 – 81.01 mm	3.1890 – 3.1894 in.
			Mark 2	81.01 – 81.02 mm	3.1894 – 3.1898 in.
			Mark 3	81.02 – 81.03 mm	3.1898 – 3.1902 in.
	Limit	STD		81.23 mm	3.1980 in.
		O/S 0.50		81.73 mm	3.2177 in.
Piston and piston ring	Piston diameter				
	4A-GE	STD	Mark 1	80.890 – 80.900 mm	3.1846 – 3.1850 in.
			Mark 2	80.900 – 80.910 mm	3.1850 – 3.1854 in.
			Mark 3	80.910 – 80.920 mm	3.1854 – 3.1858 in.
		O/S 0.50		81.390 – 81.420 mm	3.2043 – 3.2055 in.
	4A-GZE	STD	Mark 1	80.870 – 80.880 mm	3.1839 – 3.1842 in.
			Mark 2	80.880 – 80.890 mm	3.1842 – 3.1846 in.
			Mark 3	80.890 – 80.900 mm	3.1846 – 3.1850 in.
		O/S 0.50		81.370 – 81.400 mm	3.2035 – 3.2047 in.
	Piston oil clearance	4A-GE		0.10 – 0.12 mm	0.0039 – 0.0047 in.
		4A-GZE		0.12 – 0.14 mm	0.0047 – 0.0055 in.
	Piston ring groove clearance		No. 1	0.04 – 0.08 mm	0.0016 – 0.0031 in.
			No. 2	0.03 – 0.07 mm	0.0012 – 0.0028 in.
	Piston ring end gap				
	STD	No. 1		0.25 – 0.47 mm	0.0098 – 0.0185 in.
		No. 2		0.20 – 0.42 mm	0.0079 – 0.0165 in.
		Oil			
		Code mark T		0.15 – 0.52 mm	0.0059 – 0.0205 in.
		Code mark R		0.30 – 1.02 mm	0.0118 – 0.0402 in.
	Limit	No. 1		1.07 mm	0.0421 in.
		No. 2		1.02 mm	0.0402 in.
		Oil			
		Code mark T		1.12 mm	0.0441 in.
		Code mark R		1.62 mm	0.0638 in.
Connecting rod and bearing	Thrust clearance		STD	0.15 – 0.25 mm	0.0059 – 0.0098 in.
			Limit	0.30 mm	0.0118 in.
	Connecting rod oil clearance				
		STD	STD	0.020 – 0.051 mm	0.0008 – 0.0020 in.
			U/S 0.25	0.019 – 0.073 mm	0.0007 – 0.0029 in.
		Limit		0.08 mm	0.0031 in.

Specifications (Cont'd)

Connecting rod and bearing (cont'd)	Connecting rod bearing center wall thickness			
		STD Mark 1	1.486 – 1.490 mm	0.0585 – 0.0587 in.
		Mark 2	1.490 – 1.494 mm	0.0587 – 0.0588 in.
		Mark 3	1.494 – 1.498 mm	0.0588 – 0.0590 in.
		U/S 0.25	1.607 – 1.613 mm	0.0633 – 0.0635 in.
	Bent Limit per 100 mm (3.94 in.)		0.03 mm	0.0012 in.
	Twist Limit per 100 mm (3.94 in.)		0.05 mm	0.0020 in.
	Bushing inside diameter		20.010 – 20.022 mm	0.7878 – 0.7883 in.
	Piston pin diameter		20.004 – 20.016 mm	0.7876 – 0.7880 in.
	Piston pin oil clearance	STD	0.004 – 0.008 mm	0.0002 – 0.0003 in.
		Limit	0.05 mm	0.0020 in.
Crankshaft	Thrust clearance	STD	0.02 – 0.22 mm	0.0008 – 0.0087 in.
		Limit	0.30 mm	0.0118 in.
	Thrust washer thickness	STD	2.440 – 2.490 mm	0.0961 – 0.0980 in.
	Main journal oil clearance			
	STD	STD	0.015 – 0.033 mm	0.0006 – 0.0013 in.
		U/S 0.25	0.013 – 0.053 mm	0.0005 – 0.0021 in.
	Limit		0.10 mm	0.0039 in.
	Main journal diameter	STD	47.982 – 48.000 mm	1.8891 – 1.8898 in.
		U/S 0.25	47.745 – 47.755 mm	1.8797 – 1.8801 in.
	Main bearing center wall thickness			
	STD	Mark 1	2.002 – 2.005 mm	0.0788 – 0.0789 in.
		Mark 2	2.005 – 2.008 mm	0.0789 – 0.0791 in.
		Mark 3	2.008 – 2.011 mm	0.0791 – 0.0792 in.
		Mark 4	2.011 – 2.014 mm	0.0792 – 0.0793 in.
		Mark 5	2.014 – 2.017 mm	0.0793 – 0.0794 in.
	U/S 0.25		2.121 – 2.127 mm	0.0835 – 0.0837 in.
	Crank pin diameter	STD	41.985 – 42.000 mm	1.6529 – 1.6535 in.
		U/S 0.25	41.745 – 41.755 mm	1.6435 – 1.6439 in.
	Circle runout	Limit	0.06 mm	0.0024 in.
	Main journal taper and out-of-round			
		Limit	0.02 mm	0.0008 in.
	Crank pin taper and out-of-round	Limit	0.02 mm	0.0008 in.

Torque Specifications

Part tightened		kg-cm	ft-lb	N·m
Camshaft timing pulley x Camshaft		475	34	47
Idler pulley x Cylinder block		375	27	37
Crankshaft pulley x Crankshaft		1,400	101	137
Cylinder head x Cylinder block	1st	300	22	29
	2nd	90° turns		
	3rd	90° turns		
Camshaft bearing cap x Cylinder head		130	9	13
Intake manifold x Cylinder head		280	20	27
Intake manifold stay x Cylinder head (4A-GE)		220	16	22
Intake manifold stay x Cylinder block (4A-GE)		220	16	22

Torque Specifications (Cont'd)

Part tightened		kg-cm	ft-lb	N·m
EGR pipe x Exhaust manifold		700	51	69
EGR valve x Intake manifold		190	14	19
Exhaust manifold x Cylinder head		250	18	25
Exhaust manifold stay x Exhaust manifold		400	29	39
Exhaust manifold stay x Cylinder block		400	29	39
Main bearing cap x Cylinder block		610	44	60
Connecting rod cap x Connecting rod				
(Hexagon nut type)		500	36	49
(12-sided nut type)	1st	400	29	39
	2nd	90° turns		
Flywheel x Crankshaft		750	54	74
Drive plate x Crankshaft		850	61	83

SUPERCHARGER SYSTEM

Specifications

Supercharger pressure	M/T	0.25 kg/cm²	3.6 psi	25 kPa
	A/T	0.30 kg/cm²	4.3 psi	29 kPa
Supercharger magnet clutch resistance	at 20°C (68°F)	3.5 – 3.9 Ω		
Supercharger magnet clutch air gap		0.35 – 0.65 mm	0.0138 – 0.0256 in.	
Supercharger magnet clutch air gap adjusting shim thickness		0.1 mm	0.004 in.	
		0.3 mm	0.012 in.	
		0.5 mm	0.020 in.	
		0.7 mm	0.028 in.	
		0.9 mm	0.035 in.	
		1.1 mm	0.043 in.	

Torque Specifications

Part tightened	kg-cm	ft-lb	N·m
Rear plate x Housing (Bolt)	50	43 in.-lb	4.9
Rear plate x Housing (Nut)	500	36	49
Rear cover x Rear plate	50	43 in.-lb	4.9
Clutch flange x Housing	50	43 in.-lb	4.9
Clutch pulley ring nut	250	18	25
Clutch hub nut	200	14	20
No. 2 air inlet duct x Housing	95	82 in.-lb	9.4
Supercharger x Intake manifold	350	25	34
Supercharger x Bracket	600	47	64
No. 1 air inlet duct x Intake manifold	190	14	19
No. 1 air outlet duct x Housing	100	7	10
Air inlet duct stay (Duct side)	220	16	22
Air inlet duct stay (Block side)	400	29	39

EFI SYSTEM (4A-GE)

Specifications

Fuel pressure regulator	Fuel pressure at No vacuum		2.7 – 3.1 kg/cm^2 (38 — 44 psi, 265 – 304 kPa)
Cold start injector	Resistance		3 – 5 Ω
	Fuel leakage		One drop of fuel per minute or less
Injector	Resistance		Approx. 13.8 Ω
	Injection volume		45 – 55 cc/15 sec (2.7 – 3.4 cu in.)
	Difference between each injector		5 cc (0.31 cu in.) or less
	Fuel leakage		One drop of fuel per minute or less
Throttle body	Throttle valve fully closed angle		6°
Throttle position sensor	Clearance between stop screw and lever	Between terminals	Resistance
	0 mm 0 in.	VTA – E_2	0.2 – 0.8 kΩ
	0.35 mm 0.0138 in.	IDL – E_2	2.3 kΩ or less
	0.59 mm 0.0232 in.	IDL – E_2	Infinity
	Throttle valve fully opened position	VTA – E_2	3.3 – 10 kΩ
	—	Vcc – E_2	3 – 7 kΩ
Start injector time switch	Resistance	STA – STJ	20 – 40 Ω Below 30°C (86°F)
			40 – 60 Ω Above 40°C (104°F)
		STA – Ground	20 – 80 Ω —
Air flow meter	Resistance	Vs – E_2	20 – 400 Ω (Measuring plate fully closed)
			20 – 3,000 Ω (Measuring plate fully open)
		Vc – E_2	100 – 300 Ω
		Fc – E_1	∞ (Measuring plate closed)
			0 (Measuring plate open)
		THA – E_2	10 – 20 kΩ (–20°C, –4°F)
			4 – 7 kΩ (0°C, 32°F)
			2 – 3 kΩ (20°C, 68°F)
			0.9 – 1.3 kΩ (40°C, 104°F)
			0.4 – 0.7 kΩ (60°C, 140°F)
		VB – E_2	200 – 400 Ω
Water temp. sensor and air temp. sensor	Resistance	at –20°C (–4°F)	10 – 20 kΩ
		0°C (32°F)	4 – 7 kΩ
		20°C (68°F)	2 – 3 kΩ
		40°C (104°F)	0.9 – 1.3 kΩ
		60°C (140°F)	0.4 – 0.7 kΩ
		80°C (176°F)	0.2 – 0.4 kΩ

NOTE:
1. Perform all voltage and resistance measurements with the computer connected.
2. Verify that the battery voltage is 11 V or above when the ignition switch is ON.
3. The testing probes must not make contact with the computer Ox and VF terminals.

Terminals	STD voltage	Condition
BATT – E1	10 – 14	—
+B – E1		Ignition SW ON
+B1 – E1		

Specifications (Cont'd)

Terminals	STD voltage	Condition	
IDL – E2	M/T 4 – 5 A/T 10 – 14	Ignition SW ON	Throttle valve open
VTA – E2	0.1 – 1.0	Ignition SW ON	Throttle valve fully closed
	4 – 5		Throttle valve fully open
VCC – E2	4 – 6	Ignition SW ON	
VC – E2	6 – 10	Ignition SW ON	—
VS – E2	2 – 5.5		Measuring plate fully closed
	6 – 9		Measuring plate fully open
	2 – 8	Idling	—
THA – E2	1 – 3	Ignition SW ON	Intake air temperature 20°C (68°F)
THW – E2	0.1 – 1.0	Ignition SW ON	Coolant temperature 80°C (176°F)
STA – E1	6 – 14	Ignition SW ST position	
No. 10 – E01 No. 20 – E02	9 – 14	Ignition SW ON	
IGT – E1	0.7 – 1.0	Idling	
T – E1	10 – 14	Ignition SW ON	Service connector T ↔ E_1 not short
	0.5 or less		Service connector T ↔ E_2 short
A/C – E1	5 – 14	Ignition SW ON	A/C switch ON
	0.5 or less		A/C switch OFF
W – E1	0.5 or less	Ignition SW ON	
	9 – 14	Engine start	
S/TH – E1	0 – 2	Idling	
	10 – 14	More than 4,350 rpm	
* NSW – E1	0	Ignition SW ON	Shift position P or N range
	10 – 14		Ex. P or N range
	6 – 11	Cranking	

*: For A/T

Terminals	Condition	Resistance
IDL – E2	Throttle valve open	Infinity
	Throttle valve fully closed	2.3 kΩ or less
VTA – E2	Throttle valve fully open	3.3 – 10 kΩ
	Throttle valve fully closed	0.2 – 0.8 kΩ
VC – E2	—	100 – 300 Ω
VS – E2	Measuring plate fully closed	20 – 400 Ω
	Measuring plate fully open	20 – 3,000 Ω
VCC – E2	—	3 – 7 kΩ
THA – E2	Intake air temperature 20°C (68°F)	2 – 3 kΩ
THW – E2	Coolant temperature 80°C (176°F)	0.2 – 0.4 kΩ
G + – G –	—	140 – 180 Ω

Fuel cut rpm			
(w/ Vehicle speed 0 km/h and coolant temperature 80°C (176°F) and A/C switch off)	Fuel cut rpm	1,600 rpm (A/C OFF)	1,900 rpm (A/C ON)
	Fuel return rpm	1,200 rpm (A/C OFF)	1,500 rpm (A/C ON)

Torque Specifications

Part tightened	kg-cm	ft-lb	N·m
Pressure regulator x Delivery pipe	75	65 in.-lb	7.4
Inlet fuel tube x Delivery pipe	300	22	29
Cold start injector pipe x Delivery pipe	180	13	18
Cold start injector pipe x Cold start injector	180	13	18
Fuel return pipe x Pressure regulator	300	22	29
Fuel tank right No. 1 band x Left No. 1 band	145	10	14
Fuel tank right No. 2 band x Left No. 2 band	145	10	14
Fuel tank right No. 1 band x Body	195	14	19
Fuel inlet pipe x Fuel tank	35	30 in.-lb	3.4
Fuel pump x Fuel tank	35	30 in.-lb	3.4
Fuel sender gauge x Fuel tank	15	13 in.-lb	1.5

EFI SYSTEM (4A-GZE)

Specifications

Fuel pressure regulator	Fuel pressure at No vacuum		2.3 – 2.8 kg/cm² (33 — 40 psi, 226 – 275 kPa)
Cold start injector	Resistance		2 – 4 Ω
	Fuel leakage		One drop of fuel per minute or less
Injector	Resistance		Approx. 2.9 Ω
	Injection volume		80 – 100 cc/15 sec (4.9 – 6.1 cu in.)
	Difference between each injector		5 cc (0.31 cu in.) or less
	Fuel leakage		One drop of fuel per minute or less
Throttle body	Throttle valve fully closed angle		6°
Throttle position sensor	Clearance between stop screw and lever	Between terminals	Resistance
	0 mm 0 in.	VTA – E_2	0.2 – 0.8 kΩ
	0.40 mm 0.0157 in.	IDL – E_2	2.3 kΩ or less
	0.65 mm 0.0256 in.	IDL – E_2	Infinity
	Throttle valve fully opened position	VTA – E_2	3.3 – 10 kΩ
	—	Vcc – E_2	3 – 7 kΩ
Start injector time switch	Resistance	STA – STJ	20 – 40 Ω Below 30°C (86°F) 40 – 60 Ω Above 40°C (104°F)
		STA – Ground	20 – 80 Ω —
Air flow meter	Resistance	Vs – E_2	200 – 600 Ω (Measuring plate fully closed) 20 – 1,200 Ω (Measuring plate fully open)
		Vc – E_2	200 – 400 Ω
		Fc – E_1	∞ (Measuring plate closed) 0 (Measuring plate open)

Specifications (Cont'd)

Air flow meter (cont'd)	Resistance (cont'd)	THA – E_2	10 – 20 kΩ (–20°C, –4°F) 4 – 7 kΩ (0°C, 32°F) 2 – 3 kΩ (20°C, 68°F) 0.9 – 1.3 kΩ (40°C, 104°F) 0.4 – 0.7 kΩ (60°C, 140°F)
Water temp. sensor and air temp. sensor	Resistance	at –20°C (–4°F) 0°C (32°F) 20°C (68°F) 40°C (104°F) 60°C (140°F) 80°C (176°F)	10 – 20 kΩ 4 – 7 kΩ 2 – 3 kΩ 0.9 – 1.3 kΩ 0.4 – 0.7 kΩ 0.2 – 0.4 kΩ
Resistor	Resistance	No. 10 or No. 20 – +B	3 Ω
ISC Valve	Resistance	ISC_1 – +B ISC_2 – +B	16 – 17 Ω 16 – 17 Ω
Oxygen sensor	Heater coil resistance		5.1 – 6.3 Ω
EGR gas temp. sensor	Resistance	50°C (112°F) 100°C (212°F) 150°C (302°F)	69.40 – 88.50 kΩ 11.89 – 14.37 kΩ 2.79 – 3.59 kΩ

NOTE:
1. Perform all voltage and resistance measurements with the computer connected.
2. Verify that the battery voltage is 11 V or above when the ignition switch is ON.
3. The testing probes must not make contact with the computer Ox and VF terminals.

Terminals	STD voltage	Condition	
BATT – E1	10 – 14	—	
+B1, +B – E1	10 – 14	Ignition SW ON	
IDL – E2	M/T 4 – 5 A/T 10 – 14	Ignition SW ON	Throttle valve open
VTA – E2	0.1 – 1.0	Ignition SW ON	Throttle valve fully closed
	4 – 5		Throttle valve fully open
VC – E2	4 – 6		—
VC – E2	4 – 6	Ignition SW ON	—
VS – E2	3.7 – 4.3		Measuring plate fully closed
	0.2 – 0.5		Measuring plate fully open
	2.3 – 3.8	Idling	—
No. 10 – E01 No. 20 – E02	9 – 14	Ignition SW ON	
W – E1	0.5 or less	Ignition SW ON	
	9 – 14	Engine start	
THA – E2	1 – 3	Ignition SW ON	Intake air temperature 20°C (68°F)
THW – E2	0.1 – 1.0	Ignition SW ON	Coolant temperature 80°C (176°F)
STA – E1	6 – 14	Ignition SW ST position and press on the clutch pedal (M/T)	
IGT – E1	0.7 – 1.0	Idling	
RSC, RSO – E1	9 – 14	Ignition SW ON	

Specifications (Cont'd)

Terminals	STD voltage	Condition	
A/C – E1	5 – 14	Ignition SW ON	A/C switch ON
	0.5 or less		A/C switch OFF
T – E1	10 – 14	Ignition SW ON	Service connector T ↔ E_1 not short
	0.5 or less		Service connector T ↔ E_1 short
* NSW – E1	0	Ignition SW ON	Shift position P or N range
	10 – 14		Ex. P or N range
	6 – 11	Cranking	

Terminals	Condition	Resistance
IDL – E2	Throttle valve open	Infinity
	Throttle valve fully closed	2.3 kΩ or less
VTA – E2	Throttle valve fully open	3.3 – 10 kΩ
	Throttle valve fully closed	0.2 – 0.8 kΩ
VC – E2	—	200 – 400 Ω
VS – E2	Measuring plate fully closed	200 – 600 Ω
	Measuring plate fully open	20 – 1,200 Ω
VCC – E2	—	3 – 7 kΩ
THA – E2	Intake air temperature 20°C (68°F)	2 – 3 kΩ
THW – E2	Coolant temperature 80°C (176°F)	0.2 – 0.4 kΩ
G1 – G ⊖	—	140 – 180 Ω
G2 – G ⊖	—	140 – 180 Ω
Ne – G ⊖	—	140 – 180 Ω

Fuel cut rpm (w/ Vehicle speed 0 km/h and coolant temperature 80°C (176°F) and A/C switch off)	Fuel cut rpm	1,600 rpm (A/C OFF)	1,900 rpm (A/C ON)
	Fuel return rpm	1,200 rpm (A/C OFF)	1,500 rpm (A/C ON)

*: For A/T

Torque Specifications

Part tightened	kg-cm	ft-lb	N·m
Pressure regulator x Delivery pipe	75	65 in.-lb	7.4
Pulsation damper x Delivery pipe	300	22	29
Cold start injector pipe x Delivery pipe	180	13	18
Cold start injector pipe x Cold start injector	180	13	18
Fuel return pipe x Pressure regulator	150	11	15
Fuel tank right No. 1 band x Left No. 1 band	145	10	14
Fuel tank right No. 2 band x Left No. 2 band	145	10	14
Fuel tank right No. 1 band x Body	195	14	19
Fuel inlet pipe x Fuel tank	35	30 in.-lb	3.4
Fuel pump x Fuel tank	35	30 in.-lb	3.4
Fuel sender gauge x Fuel tank	15	13 in.-lb	1.5

COOLING SYSTEM

Radiator	Relief valve operating pressure	STD	0.75 – 1.05 kg/cm² (10.7 – 14.9 psi, 74 – 103 kPa)		
		Limit	0.6 kg/cm²	8.5 psi	59 kPa
Water pump	Bearing installing temperature		90°C	194°F	
Thermostat	Valve opening temperature				
	Starts to open at		80 – 84°C	176 – 183°F	
	Fully opens at		95°C	203°F	
	Valve opening travel		8 mm (0.31 in.) or more		

LUBRICATION SYSTEM

Specification

Oil pressure (normal operating temperature)				
	at Idle speed		0.3 kg/cm² (4.3 psi, 29 kPa) or more	
	at 3,000 rpm		2.5 – 5.0 kg/cm² (36 – 71 psi, 245 – 490 kPa)	
Oil pump	Body clearance	STD	0.100 – 0.191 mm	0.0039 – 0.0075 in.
		Limit	0.20 mm	0.0079 in.
	Tip clearance			
	Drive gear to crescent	STD	0.107 – 0.248 mm	0.0042 – 0.0098 in.
		Limit	0.35 mm	0.0138 in.
	Driven gear to crescent	STD	0.055 – 0.306 mm	0.0022 – 0.0120 in.
		Limit	0.35 mm	0.0138 in.
	Side clearance	STD	0.025 – 0.075 mm	0.0010 – 0.0030 in.
		Limit	0.10 mm	0.0039 in.

Torque Specifications

Part tightened	kg-cm	ft-lb	N·m
Engine oil drain plug	250	18	25
Oil pump body cover x Oil pump body	105	8	10
Oil pump x Cylinder block	218	16	21
Oil strainer x Cylinder block (oil pump)	95	82 in.-lb	9.3
Oil pan x Cylinder block	50	43 in.-lb	4.9
Exhaust manifold pipe x Converter	440	32	43
Exhaust manifold pipe x Exhaust manifold	630	46	62
Relief valve plug x No. 1 oil filter bracket	375	27	37
No. 1 oil filter bracket x Cylinder block	450	33	44
No. 2 oil filter bracket x No. 1 oil filter bracket	200	14	20
Oil cooler pipe x No. 1 oil filter bracket	300	22	29
Oil cooler union x Oil pan	250	18	25

IGNITION SYSTEM

Ignition timing	T/M in "N" position			10° BTDC @ Idling (Check connector T – E_1 short)
Spark plug	Type	4A-GE	ND	PQ16R
			NGK	BCPR5EP11
		4A-GZE	ND	PQ20R
			NGK	BCPR6EP11
	Gap			1.1 mm 0.043 in.
High-tension cord	Resistance		Limit	Less than 25 kΩ per cord
Ignition coil	Primary coil resistance			0.5 – 0.7 Ω
	Secondary coil resistance			11 – 16 kΩ
Distributor	Signal generator resistance (Cold)			
		4A-GE	G + – G –	140 – 180 Ω
			Ne + – Ne –	140 – 180 Ω
		4A-GZE	G1 + – G1 –	140 – 180 Ω
			G2 + – G2 –	140 – 180 Ω
			Ne + – Ne –	140 – 180 Ω

STARTING SYSTEM

Starter	Rated voltage and output power			12 V, 1.4 kW
	No-load characteristic		Current	Less than 90A
			rpm	More than 3,500 rpm at 11.5 V
	Brush length		STD	15.5 mm 0.610 in.
			Limit	10.0 mm 0.394 in.
	Commutator	Outer diameter	STD	30 mm 1.18 in.
			Limit	29 mm 1.14 in.
		Undercut depth	STD	0.6 mm 0.024 in.
			Limit	0.2 mm 0.008 in.
		Circle runout	Limit	0.05 mm 0.0020 in.
	Spring installed load		STD	1,785 – 2,415 g (3.9 – 5.3 lb, 18 – 24N)

CHARGING SYSTEM

Battery specific gravity When fully charged at 20°C (68°F)				1.27 – 1.29
Alternator	Rated output ampere			12 V, 70A
	Rotor coil resistance			2.8 – 3.0 Ω
	Slip ring diameter		STD	14.2 – 14.4 mm 0.561 – 0.567 in.
			Limit	12.8 mm 0.504 in.
	Brush exposed length		STD	10.5 mm 0.413 in.
			Limit	1.5 mm 0.059 in.

CHARGING SYSTEM (Cont'd)

Alternator regulator (IC)	Regulating voltage		
	4A-GE	at 25°C (77°F)	13.9 – 15.1 V
		at 115°C (239°F)	13.5 – 14.3 V
	4A-GZE	at 25°C (77°F)	13.7 – 14.8 V
		at 115°C (239°F)	13.2 – 14.0 V

CLUTCH

Specifications

Pedal height (from asphalt sheet)			157 – 167 mm	6.18 – 6.57 in.
Push rod play at pedal top			1.0 – 5.0 mm	0.039 – 0.197 in.
Pedal freeplay			5.0 – 15.0 mm	0.197 – 0.591 in.
Release fork end play			None adjustable type	
Disc rivet head depth		Limit	0.3 mm	0.012 in.
Disc runout		Limit	0.8 mm	0.031 in.
Diaphragm spring out of alignment		Limit	0.5 mm	0.020 in.
Diaphragm spring finger wear	Depth	Limit	0.6 mm	0.024 in.
	Width	Limit	5.0 mm	0.197 in.
Flywheel runout		Limit	0.1 mm	0.004 in.

Torque Specifications

Part tightened		kg-cm	ft-lb	N·m
Clutch cover x Flywheel		195	14	19
Master cylinder set nut		130	9	13
Release cylinder set bolt		185	13	18
Release fork bolt				
	4A-GE	375	27	37
	4A-GZE	480	35	47
Clutch tube union		200	14	20

MANUAL TRANSAXLE

Specifications

C52 transmission	Input shaft				
	Roller bearing journal diameter		Limit	24.970 mm	0.9831 in.
	3rd gear journal diameter		Limit	30.970 mm	1.2193 in.
	4th gear journal diameter		Limit	26.470 mm	1.0421 in.
	5th gear journal diameter		Limit	24.870 mm	0.9791 in.
	Runout		Limit	0.05 mm	0.0020 in.
	Output shaft				
	Roller bearing journal diameter		Limit	32.970 mm	1.2980 in.
	1st gear journal diameter		Limit	37.970 mm	1.4949 in.
	2nd gear journal diameter		Limit	31.970 mm	1.2587 in.
	Runout		Limit	0.05 mm	0.0020 in.
	Gear thrust clearance	1st	STD	0.10 – 0.40 mm	0.0039 – 0.0157 in.
			Limit	0.45 mm	0.0177 in.
		2nd	STD	0.10 – 0.45 mm	0.0039 – 0.0177 in.
			Limit	0.50 mm	0.0197 in.
		3rd	STD	0.10 – 0.35 mm	0.0039 – 0.0138 in.
			Limit	0.40 mm	0.0157 in.
		4th	STD	0.10 – 0.55 mm	0.0039 – 0.0217 in.
			Limit	0.60 mm	0.0236 in.
		5th	STD	0.10 – 0.57 mm	0.0039 – 0.0224 in.
			Limit	0.65 mm	0.0256 in.
	Gear oil clearance				
	1st, 2nd, 3rd, 4th and 5th		STD	0.015 – 0.058 mm	0.0006 – 0.0023 in.
			Limit	0.070 mm	0.0028 in.
	Reverse idler		STD	0.056 – 0.092 mm	0.0022 – 0.0036 in.
			Limit	0.120 mm	0.0047 in.
	Shift fork to hub sleeve clearance		Limit	1.0 mm	0.039 in.
	Synchronizer ring to gear clearance		Limit	0.6 mm	0.024 in.
	Side bearing preload (at starting)				
		New bearing		8 – 16 kg-cm (6.9 – 13.9 in.-lb, 0.8 – 1.6 N·m)	
		Reused bearing		5 – 10 kg-cm (4.3 – 8.7 in.-lb, 0.5 – 1.0 N·m)	
	Speedometer driven gear oil seal drive in depth			25 mm	0.98 in.
	Input shaft snap ring thickness				
	No. 2 clutch hub		Mark		
			0	2.30 mm	0.0906 in.
			1	2.36 mm	0.0929 in.
			2	2.42 mm	0.0953 in.
			3	2.48 mm	0.0976 in.
			4	2.54 mm	0.1000 in.
			5	2.60 mm	0.1024 in.

Specifications (Cont'd)

C52 transmission (cont'd)	Input shaft snap ring thickness (cont'd)			
	Input rear bearing	Mark		
		A	2.29 mm	0.0902 in.
		B	2.35 mm	0.0925 in.
		C	2.41 mm	0.0949 in.
		D	2.47 mm	0.0972 in.
		E	2.53 mm	0.0996 in.
		F	2.59 mm	0.1020 in.
	Output shaft snap ring thickness			
	No. 1 clutch hub	Mark		
		A	2.50 mm	0.0984 in.
		B	2.56 mm	0.1008 in.
		C	2.62 mm	0.1031 in.
		D	2.68 mm	0.1055 in.
		E	2.74 mm	0.1079 in.
		F	2.80 mm	0.1102 in.
	No. 3 clutch hub	Mark		
		A	2.25 mm	0.0886 in.
		B	2.31 mm	0.0909 in.
		C	2.37 mm	0.0933 in.
		D	2.43 mm	0.0957 in.
		E	2.49 mm	0.0980 in.
		F	2.55 mm	0.1004 in.
		G	2.61 mm	0.1028 in.
	Differential side bearing shim thickness			
		Mark		
		A	2.10 mm	0.0827 in.
		B	2.15 mm	0.0846 in.
		C	2.20 mm	0.0866 in.
		D	2.25 mm	0.0886 in.
		E	2.30 mm	0.0906 in.
		F	2.35 mm	0.0925 in.
		G	2.40 mm	0.0945 in.
		H	2.45 mm	0.0965 in.
		J	2.50 mm	0.0984 in.
		K	2.55 mm	0.1004 in.
		L	2.60 mm	0.1024 in.
		M	2.65 mm	0.1043 in.
		N	2.70 mm	0.1063 in.
		P	2.75 mm	0.1083 in.
		Q	2.80 mm	0.1102 in.
		R	2.85 mm	0.1122 in.
		S	2.90 mm	0.1142 in.
		T	2.95 mm	0.1161 in.
		U	3.00 mm	0.1181 in.

Specifications (Cont'd)

E51 transmission	Input shaft			
	3rd and 4th gear journal diameter		Limit	35.950 mm / 1.4154 in.
	5th gear journal diameter		Limit	32.930 mm / 1.2965 in.
	Runout		Limit	0.05 mm / 0.0020 in.
	Output shaft			
	Roller bearing journal diameter		Limit	32.070 mm / 1.2626 in.
	1st and 2nd gear journal diameter		Limit	38.950 mm / 1.5335 in.
	Runout		Limit	0.06 mm / 0.0024 in.
	Gear thrust clearance	1st	STD	0.10 – 0.35 mm / 0.0039 – 0.0138 in.
			Limit	0.40 mm / 0.0157 in.
		2nd	STD	0.10 – 0.45 mm / 0.0039 – 0.0177 in.
			Limit	0.50 mm / 0.0197 in.
		3rd	STD	0.10 – 0.35 mm / 0.0039 – 0.0138 in.
			Limit	0.40 mm / 0.0157 in.
		4th	STD	0.10 – 0.55 mm / 0.0039 – 0.0217 in.
			Limit	0.60 mm / 0.0236 in.
		5th	STD	0.10 – 0.57 mm / 0.0039 – 0.0224 in.
			Limit	0.62 mm / 0.0244 in.
	Gear oil clearance			
	1st and 4th		STD	0.009 – 0.051 mm / 0.0004 – 0.0020 in.
			Limit	0.070 mm / 0.0028 in.
	2nd and 3rd		STD	0.009 – 0.053 mm / 0.0004 – 0.0021 in.
			Limit	0.070 mm / 0.0028 in.
	5th		STD	0.009 – 0.050 mm / 0.0004 – 0.0020 in.
			Limit	0.070 mm / 0.0028 in.
	Reverse idler		STD	0.056 – 0.090 mm / 0.0022 – 0.0035 in.
			Limit	0.120 mm / 0.0047 in.
	Shift fork to hub sleeve clearance		Limit	1.0 mm / 0.039 in.
	Synchronizer ring to gear clearance		Limit	0.6 mm / 0.024 in.
	Output shaft bearing preload (at starting)			
		New bearing		8 – 16 kg-cm (6.9 – 13.9 in.-lb, 0.8 – 1.6 N·m)
		Reused bearing		5 – 10 kg-cm (4.3 – 8.7 in.-lb, 0.5 – 1.0 N·m)
	Side bearing preload (at starting)			
		New bearing		Output shaft bearing preload +1.9 – 3.7 kg-cm (1.6 – 3.2 in.-lb, 0.2 – 0.4 N·m)
		Reused bearing		Output shaft bearing preload +1.2 – 2.3 kg-cm (1.0 – 2.0 in.-lb, 0.1 – 0.2 N·m)
	Speedometer driven gear oil seal drive in depth			33 mm / 1.30 in.
	Oil pump			
	Body clearance		STD	0.10 – 0.16 mm / 0.004 – 0.006 in.
			Limit	0.30 mm / 0.012 in.
	Tip clearance		STD	0.08 – 0.15 mm / 0.003 – 0.006 in.
			Limit	0.30 mm / 0.012 in.
	Side clearance		STD	0.03 – 0.08 mm / 0.001 – 0.003 in.
			Limit	0.15 mm / 0.006 in.

Specifications (Cont'd)

E51 transmission (cont'd)	Input shaft snap ring thickness			
	No. 2 clutch hub	Mark		
		H	2.30 mm	0.0906 in.
		J	2.35 mm	0.0925 in.
		K	2.40 mm	0.0945 in.
		L	2.45 mm	0.0965 in.
		M	2.50 mm	0.0984 in.
		N	2.55 mm	0.1004 in.
		P	2.60 mm	0.1024 in.
	Input rear bearing	Mark		
		1	2.35 mm	0.0925 in.
		2	2.40 mm	0.0945 in.
		3	2.45 mm	0.0965 in.
		4	2.50 mm	0.0984 in.
		5	2.55 mm	0.1004 in.
		6	2.60 mm	0.1024 in.
		7	2.65 mm	0.1043 in.
		8	2.70 mm	0.1063 in.
	Output shaft snap ring thickness			
	No. 1 clutch hub	Mark		
		A	2.80 mm	0.1102 in.
		B	2.85 mm	0.1122 in.
		C	2.90 mm	0.1142 in.
		D	2.95 mm	0.1161 in.
		E	3.00 mm	0.1181 in.
		F	3.05 mm	0.1201 in.
		G	3.10 mm	0.1220 in.
	No. 3 clutch hub	Mark		
		Q	2.25 mm	0.0886 in.
		R	2.30 mm	0.0906 in.
		S	2.35 mm	0.0925 in.
		T	2.40 mm	0.0945 in.
		U	2.45 mm	0.0965 in.
		V	2.50 mm	0.0984 in.
		W	2.55 mm	0.1004 in.
		X	2.60 mm	0.1024 in.
		Y	2.65 mm	0.1043 in.
	Output shaft rear bearing adjusting shim thickness	Mark		
		0	1.30 mm	0.0512 in.
		1	1.35 mm	0.0531 in.
		2	1.40 mm	0.0551 in.
		3	1.45 mm	0.0571 in.
		4	1.50 mm	0.0591 in.
		5	1.55 mm	0.0610 in.
		6	1.60 mm	0.0630 in.
		7	1.65 mm	0.0650 in.
		8	1.70 mm	0.0669 in.
		9	1.75 mm	0.0689 in.

Specifications (Cont'd)

E51 transmission (cont'd)	Output shaft rear bearing adjusting shim thickness (cont'd)		
	Mark		
	A	1.80 mm	0.0709 in.
	B	1.85 mm	0.0728 in.
	C	1.90 mm	0.0748 in.
	D	1.95 mm	0.0768 in.
	E	2.00 mm	0.0787 in.
	F	2.05 mm	0.0807 in.
	G	2.10 mm	0.0827 in.
	H	2.15 mm	0.0846 in.
	J	2.20 mm	0.0866 in.
	K	2.25 mm	0.0886 in.
	L	2.30 mm	0.0906 in.
	M	2.35 mm	0.0925 in.
	N	2.40 mm	0.0945 in.
	P	2.45 mm	0.0965 in.
	Q	2.50 mm	0.0984 in.
	Differential pinion to side gear backlash	0.05 – 0.20 mm	0.0020 – 0.0079 in.
	Differential runout Limit	0.07 mm	0.0028 in.
	Differential side gear thrust washer thickness	0.80 mm	0.0315 in.
		0.90 mm	0.0354 in.
		1.00 mm	0.0394 in.
		1.10 mm	0.0433 in.
		1.20 mm	0.0472 in.
		1.30 mm	0.0512 in.
		1.40 mm	0.0551 in.
	Differential side bearing adjusting shim thickness		
	Mark		
	0	2.00 mm	0.0787 in.
	1	2.05 mm	0.0807 in.
	2	2.10 mm	0.0827 in.
	3	2.15 mm	0.0846 in.
	4	2.20 mm	0.0866 in.
	5	2.25 mm	0.0886 in.
	6	2.30 mm	0.0906 in.
	7	2.35 mm	0.0925 in.
	8	2.40 mm	0.0945 in.
	9	2.45 mm	0.0965 in.
	A	2.50 mm	0.0984 in.
	B	2.55 mm	0.1004 in.
	C	2.60 mm	0.1024 in.
	D	2.65 mm	0.1043 in.
	E	2.70 mm	0.1063 in.
	F	2.75 mm	0.1083 in.
	G	2.80 mm	0.1102 in.
	H	2.85 mm	0.1122 in.

Torque Specifications

	Part tightened	kg-cm	ft-lb	N·m
C52 transmission	Transmission case x Transaxle case	300	22	29
	Transmission case x Case cover	185	13	18
	Transmission case protector	130	9	13
	Rear bearing retainer	195	14	19
	Output shaft bearing lock plate	115	8	11
	5th driven gear lock nut	1,200	87	118
	Reverse idler shaft lock bolt	300	22	29
	Control shaft cover bolt	200	14	20
	Reverse shift arm bracket	175	13	17
	Shift fork x Lock bolt	160	12	16
	Reverse restrict pin holder	200	14	20
	Filler plug	400	29	39
	Drain plug	400	29	39
	Back-up light switch	410	30	40
	Front bearing retainer	110	8	11
	Speedometer driven gear lock plate	115	8	11
	Straight screw plug (shift fork shaft)	250	18	25
	Lock ball assembly	400	29	39
	Shift lever lock nut	120	9	12
	Transaxle x Engine 12 mm bolt	650	47	64
	10 mm bolt	470	34	46
	Engine mounting LH	530	38	52
	Rear engine mounting	530	38	52
	Front engine mounting	530	38	52
	Insulator set bolt	800	58	78
	Starter x Transaxle	400	29	39
	Drive shaft x Side gear	370	27	36
	Transaxle protector bolt	130	9	13
	Exhaust pipe x Exhaust manifold	630	46	62
	Control cable bracket Transaxle side	650	47	64
	Release cylinder side	185	13	18
	No. 2 control cable bracket bolt	195	14	19
	Water inlet set bolt	200	14	20
	Selecting bellcrank support set bolt	195	14	19
	Control cable x Linkage	135	10	13
	Selecting bellcrank set bolt	120	9	12
E51 transmission	Transmission case x Transaxle case	300	22	29
	Transmission case x Case cover	300	22	29
	Transmission case protector	175	13	17
	Transaxle case x Transaxle case cover	550	38	54
	Rear bearing retainer	430	31	42
	5th driven gear lock nut	1,250	90	123
	Reverse idler shaft lock bolt	300	22	29
	Control shaft cover bolt	200	14	20
	Reverse shift arm bracket	175	13	17

Torque Specifications (Cont'd)

	Part tightened	kg-cm	ft-lb	N·m
E51 transmission (cont'd)	Shift fork x Lock bolt	240	17	24
	Reverse restrict pin holder	130	9	13
	Filler plug	500	36	49
	Drain plug	500	36	49
	Back-up light switch	410	30	40
	Straight screw plug (shift fork shaft)	250	18	25
	Shift lever lock nut	120	9	12
	Transaxle x Engine 12 mm bolt	650	47	64
	10 mm bolt	470	34	46
	Engine mounting LH	530	38	52
	Rear engine mounting	530	38	52
	Front engine mounting	530	38	52
	Insulator set bolt	800	58	78
	Starter x Transaxle	400	29	39
	Drive shaft x Side gear	660	48	65
	Transaxle protector bolt	175	13	17
	Exhaust pipe x Exhaust manifold	630	46	62
	Control cable bracket Transaxle side	650	47	64
	Release cylinder side	185	13	18
	Water inlet set bolt	200	14	20
	Selecting bellcrank support set bolt	200	14	20
	Control cable x Linkage	135	10	13
	Selecting bellcrank set bolt	120	9	12
	Oil pipe clamp	175	13	17
	Elbow	275	20	27
	Oil cooler tube	350	25	34
	Ring gear x Differential case	1,260	91	124
	Differential case No. 1 x No. 2	640	46	63
	Intercooler x Body bracket	175	13	17

AUTOMATIC TRANSAXLE

Automatic Transmission

Specifications (A240E/4A-GE)

Line pressure		
Engine idling	D range	3.7 – 4.3 kg/cm² (53 – 61 psi, 363 – 422 kPa)
	R range	5.4 – 7.2 kg/cm² (77 – 102 psi, 530 – 706 kPa)
At stall	D range	9.2 – 10.7 kg/cm² (131 – 152 psi, 902 – 1,049 kPa)
	R range	14.4 – 16.8 kg/cm² (205 – 239 psi, 1,412 – 1,648 kPa)
Engine idle speed (Cooling fan and A/C OFF)		800 rpm
Engine stall revolution		2,150 ± 150 rpm
Time lag	N range → D range	Less than 1.2 seconds
	N range → R range	Less than 1.5 seconds
Throttle cable adjustment (Throttle valve fully opened)		Between boot end face and inner cable stopper
		0 – 1 mm 0 – 0.04 in.
Input shaft thrust play		0.2 – 0.9 mm 0.008 – 0.035 in.
Torque converter runout	Limit	Less than 0.30 mm (0.0118 in.)
Drive plate runout	Limit	Less than 0.20 mm (0.0079 in.)

Shift point km/h (mph)

		Throttle valve fully open [ ] Fully closed							
		1→2	2→3	3→OD	[3→OD]	[OD→3]	OD→3	3→2	2→1
D range	NORM	48–53 (30–33)	93–101 (58–63)	146–155 (91–96)	31–35 (19–22)	20–24 (12–15)	137–146 (85–91)	87–95 (54–59)	43–47 (27–29)
	PWR	60–65 (37–40)	109–117 (68–73)	177–187 (110–116)	47–51 (29–32)	20–24 (12–15)	169–178 (105–111)	103–111 (64–69)	43–47 (27–29)
2 range	NORM PWR	60–65 (37–40)	–	–	–	–	–	–	43–47 (27–29)
L range	NORM PWR	–	–	–	–	–	–	–	50–54 (31–34)

Lock-up point km/h (mph)

		Throttle valve opening 5%					
		Lock-up ON			Lock-up OFF		
		2nd	3rd	OD	2nd	3rd	OD
D range	NORM	–	*64–69 (40–43)	67–72 (42–45)	–	*50–54 (31–34)	61–66 (38–41)
	PWR	–	*83–91 (52–57)	78–83 (48–52)	–	*73–78 (45–48)	66–70 (41–44)

* OD switch OFF

Valve body spring mm (in.)

Spring	Free length	Coil outer diameter	No. coils	Wire diameter	Color
Upper valve body					
Primary regulator valve	66.65 (2.6240)	18.6 (0.732)	12.5	1.6 (0.063)	Purple
Lock-up relay valve	18.80 (0.7402)	5.1 (0.201)	14.5	0.5 (0.020)	None
Low coast modulator valve	27.51 (1.0831)	8.3 (0.327)	12.5	0.9 (0.035)	Yellow
Kick-down valve	29.76 (1.1717)	8.73 (0.3437)	13.5	1.0 (0.039)	White
Throttle valve	29.18 (1.1488)	9.2 (0.362)	9.5	0.7 (0.028)	Yellow Green
Throttle modulator valve	29.90 (1.1772)	9.0 (0.354)	15.5	0.9 (0.035)	Green
Accumulator control valve	35.90 (1.4134)	10.0 (0.394)	11.5	0.9 (0.035)	Blue

Specifications (A240E/4A-GE) (Cont'd)

	Spring	Free length	Coil outer diameter	No. coils	Wire diameter	Color
Valve body spring (cont'd) mm (in.)	Lower valve body					
	Secondary regulator valve	27.41 (1.0791)	11.0 (0.433)	11.5	1.4 (0.055)	Blue
	1–2 shift valve	30.77 (1.2114)	9.7 (0.382)	10.5	0.9 (0.035)	Purple
	3–4 shift valve	30.77 (1.2114)	9.7 (0.382)	10.5	0.9 (0.035)	Purple
	2–3 shift valve	30.77 (1.2114)	9.7 (0.382)	10.5	0.9 (0.035)	Purple
	2nd coast modulator valve	29.63 (1.1665)	8.3 (0.327)	12.5	1.0 (0.039)	Red
	Lock-up signal valve	30.00 (1.1811)	8.2 (0.323)	11.5	0.7 (0.028)	Orange
Accumulator piston spring mm (in.)		Free length	Coil outer diameter	No. coils	Wire diameter	Color
	B_4 (Underdrive)	65.42 (2.5756)	18.00 (0.7087)	13.0	2.60 (0.1024)	None
	B_2	66.68 (2.6252)	17.34 (0.6827)	16	2.80 (0.1102)	Red
	C_1 Inner	42.50 (1.6732)	17.30 (0.6811)	9.5	2.30 (0.0906)	None
	C_1 Outer	71.10 (2.7992)	23.20 (0.9134)	12.5	2.30 (0.0906)	White
	C_2	62.68 (2.4677)	17.20 (0.6772)	20	2.20 (0.0866)	Light Green
	C_3	61.47 (2.4201)	15.73 (0.6193)	14.5	2.30 (0.0906)	White
Clutch piston return spring mm (in.)	Forward clutch (C_1)	14.90 (0.5866)	7.70 (0.3031)	8	1.10 (0.0433)	–

Oil pump	Side clearance	STD	0.02 – 0.05 mm	0.0008 – 0.0020 in.
		Limit	0.1 mm	0.004 in.
	Body clearance	STD	0.07 – 0.15 mm	0.0028 – 0.0059 in.
		Limit	0.3 mm	0.012 in.
	Tip clearance Driven gear	STD	0.11 – 0.14 mm	0.0043 – 0.0055 in.
		Limit	0.3 mm	0.012 in.
Clutch piston stroke	Forward clutch (C_1)		1.42 – 1.81 mm	0.0559 – 0.0713 in.
	Direct clutch (C_2)		1.13 – 1.50 mm	0.0445 – 0.0591 in.
	Underdrive clutch (C_3)		1.47 – 1.89 mm	0.0579 – 0.0744 in.
Brake piston stroke	Second coast brake (B_1)		1.5 – 3.0 mm	0.059 – 0.118 in.

	Bushing		Finished bore	Bore limit
Bushing mm (in.)	Stator Support	Front	21.500 – 21.526 (0.8465 – 0.8475)	21.576 (0.8494)
		Rear	27.000 – 27.026 (1.0630 – 1.0640)	27.076 (1.0660)
	Oil pump body		38.113 – 38.138 (1.5005 – 1.5015)	38.188 (1.5035)
	Direct clutch drum		47.000 – 47.025 (1.8504 – 1.8514)	47.075 (1.8533)
	Front planetary ring gear flange		19.025 – 19.050 (0.7490 – 07500)	19.100 (0.7520)
	Input sun gear	Front and Rear	22.025 – 22.046 (0.8671 – 0.8680)	22.096 (0.8699)

Specifications (A241E/4A-GZE)

Line pressure		
Engine idling	D range	3.7 – 4.3 kg/cm² (53 – 61 psi, 363 – 422 kPa)
	R range	6.3 – 8.1 kg/cm² (90 – 115 psi, 618 – 794 kPa)
At stall	D range	9.2 – 10.7 kg/cm² (131 – 152 psi, 902 – 1,049 kPa)
	R range	15.9 – 19.3 kg/cm² (226 – 274 psi, 1,559 – 1,893 kPa)
Engine idle speed (Cooling fan and A/C OFF)		800 rpm
Engine stall revolution		2,650 ± 150 rpm
Time lag	N range → D range	Less than 1.2 seconds
	N range → R range	Less than 1.5 seconds
Throttle cable adjustment (Throttle valve fully opened)		Between boot end face and inner cable stopper
		0 – 1 mm 0 – 0.04 in.
Input shaft thrust play		0.2 – 0.9 mm 0.008 – 0.035 in.
Torque converter runout	Limit	Less than 0.30 mm (0.0118 in.)
Drive plate runout	Limit	Less than 0.20 mm (0.0079 in.)

Shift point km/h (mph)

		Throttle valve fully open [ ] Fully closed							
		1→2	2→3	3→OD	[3→OD]	[OD→3]	OD→3	3→2	2→1
D range	NORM	46–50 (29–31)	88–96 (55–60)	132–140 (82–87)	30–35 (19–22)	19–23 (12–14)	126–134 (78–83)	82–90 (51–56)	42–46 (26–29)
	PWR	51–56 (32–35)	95–103 (59–64)	150–159 (93–99)	40–46 (25–29)	19–23 (12–14)	143–152 (89–94)	89–97 (55–60)	42–46 (26–29)
2 range	NORM PWR	51–56 (32–35)	–	–	–	–	–	–	42–46 (26–29)
L range	NORM PWR	–	–	–	–	–	–	–	46–50 (29–31)

Lock-up point km/h (mph)

		Throttle valve opening 5%					
		Lock-up ON			Lock-up OFF		
		2nd	3rd	OD	2nd	3rd	OD
D range	NORM	–	*66–70 (41–43)	54–59 (34–37)	–	*60–65 (37–40)	51–56 (32–35)
	PWR	–	*103–112 (64–70)	81–89 (50–55)	–	*95–103 (59–64)	77–82 (48–51)

* OD switch OFF

Valve body spring mm (in.)

Spring	Free length	Coil outer diameter	No. coils	Wire diameter	Color
Upper valve body					
Primary regulator valve	66.65 (2.6240)	18.6 (0.732)	12.5	1.6 (0.063)	Purple
Lock-up relay valve	18.80 (0.7402)	5.1 (0.201)	14.5	0.5 (0.020)	None
Low coast modulator valve	27.51 (1.0831)	8.3 (0.327)	12.5	0.9 (0.035)	Yellow
Kick-down valve	29.76 (1.1717)	8.73 (0.3437)	13.5	1.0 (0.039)	White
Throttle valve	29.18 (1.1488)	9.2 (0.362)	9.5	0.7 (0.028)	Yellow Green
Throttle modulator valve	29.90 (1.1772)	9.0 (0.354)	15.5	0.9 (0.035)	Green
Accumulator control valve	35.90 (1.4134)	10.0 (0.394)	11.5	0.9 (0.035)	Blue

Specifications (A241E/4A-GZE) (Cont'd)

	Spring	Free length	Coil outer diameter	No. coils	Wire diameter	Color
Valve body spring (cont'd) mm (in.)	Lower valve body					
	Secondary regulator valve	27.41 (1.0791)	11.0 (0.433)	11.5	1.4 (0.055)	Blue
	1–2 shift valve	30.77 (1.2114)	9.7 (0.382)	10.5	0.9 (0.035)	Purple
	3–4 shift valve	30.77 (1.2114)	9.7 (0.382)	10.5	0.9 (0.035)	Purple
	2–3 shift valve	30.77 (1.2114)	9.7 (0.382)	10.5	0.9 (0.035)	Purple
	2nd coast modulator valve	29.63 (1.1665)	8.3 (0.327)	12.5	1.0 (0.039)	Red
	Lock-up signal valve	30.00 (1.1811)	8.2 (0.323)	11.5	0.7 (0.028)	Orange
Accumulator piston spring mm (in).		Free length	Coil outer diameter	No. coils	Wire diameter	Color
	B_4 (Underdrive)	65.42 (2.5756)	18.00 (0.7087)	13.0	2.60 (0.1024)	None
	B_2	66.68 (2.6251)	17.40 (0.6850)	15.5	2.70 (0.1063)	Gray
	C_1 Inner	41.00 (1.6142)	16.45 (0.6476)	9.5	2.60 (0.1024)	Pink
	C_1 Outer	74.07 (2.9161)	22.69 (0.8933)	13	2.40 (0.0945)	Pink
	C_2	62.68 (2.4677)	17.20 (0.6772)	20	2.20 (0.0866)	Light Green
	C_3	61.47 (2.4201)	15.73 (0.6193)	14.5	2.30 (0.0906)	White
Clutch piston return spring mm (in.)	Forward clutch (C_1)	14.90 (0.5866)	7.70 (0.3031)	8	1.10 (0.0433)	Yellow

Oil pump	Side clearance	STD	0.02 – 0.05 mm	0.0008 – 0.0020 in.
		Limit	0.1 mm	0.004 in.
	Body clearance	STD	0.07 – 0.15 mm	0.0028 – 0.0059 in.
		Limit	0.3 mm	0.012 in.
	Tip clearance Driven gear	STD	0.11 – 0.14 mm	0.0043 – 0.0055 in.
		Limit	0.3 mm	0.012 in.
Clutch piston stroke	Forward clutch (C_1)		1.42 – 1.81 mm	0.0559 – 0.0713 in.
	Direct clutch (C_2)		1.13 – 1.50 mm	0.0445 – 0.0591 in.
	Underdrive clutch (C_3)		1.47 – 1.89 mm	0.0579 – 0.0744 in.
Brake piston stroke	Second coast brake (B_1)		1.5 – 3.0 mm	0.059 – 0.118 in.

	Bushing		Finished bore	Bore limit
Bushing mm (in.)	Stator Support	Front	21.500 – 21.526 (0.8465 – 0.8475)	21.576 (0.8494)
		Rear	27.000 – 27.026 (1.0630 – 1.0640)	27.076 (1.0660)
	Oil pump body		38.113 – 38.138 (1.5005 – 1.5015)	38.188 (1.5035)
	Direct clutch drum		47.000 – 47.025 (1.8504 – 1.8514)	47.075 (1.8533)
	Front planetary ring gear flange		19.025 – 19.050 (0.7490 – 0.7500)	19.100 (0.7520)
	Input sun gear Front and Rear		22.025 – 22.046 (0.8671 – 0.8680)	22.096 (0.8699)

Torque Specifications

Part tightened	kg-cm	ft-lb	N·m
Engine mounting	530	38	52
Transaxle housing x Engine	650	47	64
Drive plate x Crank shaft	650	47	64
Torque converter x Drive plate	280	20	27
Oil pump x Transaxle case	250	18	25
Oil pump body x Stator shaft	100	7	10
Second coast brake band guide	55	48 in.-lb	5.4
Upper valve body x Lower valve body	65	56 in.-lb	6.4
Valve body	100	7	10
Accumulator cover	100	7	10
Oil strainer	100	7	10
Oil pan	50	43 in.-lb	4.9
Oil pan drain plug	175	13	17
Cooler pipe union nut x Union elbow	350	25	34
Union elbow x Transaxle case	275	20	27
Testing plug	75	65 in.-lb	7.4
Parking lock pawl bracket	75	65 in.-lb	7.4
Transaxle rear cover x Transaxle case	300	22	29
Neutral start switch x Transaxle case	55	48 in.-lb	5.4
Neutral start switch	70	61 in.-lb	6.9

Differential Specifications

Side bearing preload (at starting)	New bearing	8 – 14 kg-cm	6.9 – 12.2 in.-lb	0.8 – 1.4 N·m
	Reused bearing	4 – 7 kg-cm	3.5 – 6.1 in.-lb	0.4 – 0.7 N·m
Pinion to side gear backlash		0.05 – 0.20 mm	0.0020 – 0.0079 in.	
Side gear thrust washer thickness		0.95 mm	0.0374 in.	
		1.00 mm	0.0394 in.	
		1.05 mm	0.0413 in.	
		1.10 mm	0.0433 in.	
		1.15 mm	0.0453 in.	
		1.20 mm	0.0472 in.	
Side bearing adjusting shim thickness		2.00 mm	0.0787 in.	
		2.05 mm	0.0807 in.	
		2.10 mm	0.0827 in.	
		2.15 mm	0.0846 in.	
		2.20 mm	0.0866 in.	
		2.25 mm	0.0886 in.	
		2.30 mm	0.0906 in.	
		2.35 mm	0.0925 in.	
		2.40 mm	0.0945 in.	

Specifications (Cont'd)

Side bearing adjusting shim thickness (cont'd)	2.45 mm	0.0965 in.
	2.50 mm	0.0984 in.
	2.55 mm	0.1004 in.
	2.60 mm	0.1024 in.
	2.65 mm	0.1043 in.
	2.70 mm	0.1063 in.
	2.75 mm	0.1083 in.
	2.80 mm	0.1102 in.
	2.85 mm	0.1122 in.
	2.90 mm	0.1142 in.

Torque Specifications

Part tightened	kg-cm	ft-lb	N·m
Ring gear x Differential case	985	71	97
Transaxle housing x Transmission case	300	22	29

FRONT AXLE AND SUSPENSION

Specifications

Cold tire inflation pressure		2.1 kg/cm²	30 psi	210 kPa
Chassis ground clearance		Front		Rear
		221 mm (8.70 in.)		205 mm (8.07 in.)
Front wheel alignment		Inspection STD		Adjustment STD
	Toe-in	1 ± 2 mm (0.04 ± 0.08 in.)		1 ± 1 mm (0.04 ± 0.04 in.)
	Camber	0°15′ ± 45′		0°15′ ± 30′
	Left-right error	30′ or less		30′ or less
	Steering axis inclination	12°05′ ± 45′		—
	Left-right error	30′ or less		
	Caster	5°05′ ± 45′		5°05′ ± 30′
	Left-right error	30′ or less		30′ or less
	Side slip	3.0 mm/m (0.118 in./3.3 ft) or less		
	Wheel angle	Max.	Inside wheel	36°30′ ± 1°
			Outside wheel (Reference)	32°00′
		at 20° (Outside wheel)	Inside wheel	21°
Disc wheel lateral runout	Max. limit	1.2 mm		0.047 in.
Hub axial play	Max. limit	0.05 mm		0.0020 in.
Ball joint vertical play	Max. limit	0 mm		0 in.

Torque Specifications

Part tightened	kg-cm	ft-lb	N·m
Steering knuckle x Shock absorber	1,650	119	162
Steering knuckle x Tie rod end	500	36	49
Steering knuckle x Ball joint	820	59	80
Stabilizer link x Stabilizer bar	650	47	64
Stabilizer bar link x Shock absorber	650	47	64
Steering knuckle x Disc brake caliper	900	65	88
Suspension support x Piston rod	500	36	49
Suspension support x Body	360	26	35
Brake caliper union bolt	310	22	30
Strut bar x Lower arm	1,150	83	113
Strut bar x Body	1,150	83	113
Stabilizer bar bracket x Body	195	14	19

REAR AXLE AND SUSPENSION

Specifications

		Inspection STD	Adjustment STD
Rear wheel alignment	Toe-in	5 ± 2 mm (0.20 ± 0.08 in.)	5 ± 1 mm (0.20 ± 0.04 in.)
	Camber	−55′ ± 45′	−55′ ± 30′
	Left-right error	30′ or less	30′ or less

Rear axle and suspension	Disc wheel lateral runout		Limit	1.2 mm (0.047 in.) or less	
	Hub bearing axial direction play		Limit	0.05 mm	0.0020 in.
	Drive shaft grease capacity				
	Outboard joint			120 – 130 g	0.26 – 0.29 lb
	Inboard joint	4A-GE	M/T	212 – 222 g	0.47 – 0.49 lb
			A/T	180 – 190 g	0.40 – 0.42 lb
		4A-GZE		90 – 100 g	0.20 – 0.22 lb
	Side gear shaft	4A-GZE		43 – 53 g	0.09 – 0.12 lb
	Drive shaft length				
	LH	4A-GE	M/T	434.2 – 444.2 mm	17.09 – 17.49 in.
			A/T	536.3 – 546.3 mm	21.11 – 21.51 in.
		4A-GZE	M/T	382.2 – 392.2 mm	15.05 – 15.44 in.
			A/T	410.9 – 420.9 mm	16.18 – 16.57 in.
	RH	4A-GE	M/T	679.9 – 689.9 mm	26.77 – 27.16 in.
			A/T	814.2 – 824.2 mm	32.06 – 32.45 in.
		4A-GZE	M/T	680.6 – 690.6 mm	26.80 – 27.19 in.
			A/T	699.4 – 709.4 mm	27.54 – 27.93 in.
	Ball joint vertical play		Limit	0 mm	0 in.
	Ball joint rotation condition			10 – 30 kg-cm (9 – 26 in.-lb, 1.0 – 2.9 N·m)	

Torque Specifications

Part tightened		kg-cm	ft-lb	N·m
Axle carrier x Shock absorber		2,300	166	226
Lower ball joint x Axle carrier		1,150	83	113
Suspension support x Body		320	23	31
Suspension support x Shock absorber piston rod		740	54	73
Lower arm x Ball joint		930	67	91
Lower arm x Body		1,300	94	127
Lower arm x Strut rod		1,190	86	117
Strut rod x Body		1,200	87	118
Suspension arm x Axle carrier		500	36	49
Suspension arm x Body		1,050	76	103
Brake caliper x Axle carrier		600	43	59
Tie rod end x Axle carrier		500	36	49
Wheel bearing lock nut		1,900	137	186
Side gear shaft x Drive shaft	4A-GE (M/T)	370	27	36
	4A-GZE	660	48	65
Stabilizer link x Stabilizer bar		360	26	35
Stabilizer bar link x Shock absorber		360	26	35
Stabilizer bar bracket x Body		400	29	39

BRAKE SYSTEM

Specifications

Brake pedal	Pedal height (from asphalt sheet)		154 – 164 mm	6.06 – 6.46 in.
	Pedal freeplay		3 – 6 mm	0.12 – 0.24 in.
	Pedal reserve distance	at 50 kg (110.2 lb, 490 N)		
		4A-GE	More than 87 mm (3.43 in.)	
		4A-GZE	More than 77 mm (3.03 in.)	
Brake booster	Booster push rod to piston clearance			
		w/ SST	0 mm	0 in.
Front brake	Pad thickness	STD	10.0 mm	0.394 in.
		Limit	3.0 mm	0.118 in.
	Disc thickness	STD	22.0 mm	0.866 in.
		Limit	21.0 mm	0.827 in.
	Disc runout	Limit	0.13 mm	0.0051 in.
Rear brake	Pad thickness	STD	10.0 mm	0.394 in.
		Limit	1.0 mm	0.039 in.
	Disc thickness	STD	10.0 mm	0.394 in.
		Limit	9.0 mm	0.354 in.
	Disc runout	Limit	0.15 mm	0.0059 in.
Parking brake	Lever travel	at 20 kg (44.1 lb, 196 N)	5 – 8 clicks	

Torque Specifications

Part tightened	kg-cm	ft-lb	N·m
Piston stopper bolt x Master cylinder	100	7	10
Reservoir union bolt x Master cylinder	550	40	54
Reservoir set bolt x Master cylinder	250	18	25
Master cylinder x Brake booster	130	9	13
Brake tube union nut	155	11	15
Brake booster x Pedal bracket	130	9	13
Brake booster clevis lock nut	260	19	25
Front disc brake cylinder installation bolt	255	18	25
Front disc brake torque plate x Steering knuckle	900	65	88
Flexible hose	310	22	30
Bleeder plug	85	74 in.-lb	8.3
Rear disc brake cylinder installation bolt	200	14	20
Rear disc brake torque plate x Rear axle carrier	600	43	59

STEERING

Specifications

Steering	Steering wheel freeplay		30 mm (1.18 in.) or less
	Steering rack runout	Limit	0.3 mm 0.012 in.
	Pinion bearing preload	at Turning	2.3 – 3.3 kg-cm (2.0 – 2.9 in.-lb, 0.2 – 0.3 N·m)
	Total preload	at Turning	5.0 – 13.0 kg-cm (4.3 – 11.3 in.-lb, 0.5 – 1.3 N·m)

Torque Specifications

	Part tightened	kg-cm	ft-lb	N·m
Steering column	Steering wheel x Steering main shaft	350	25	34
	Universal joint	360	26	35
	Tilt steering support x Body	260	19	25
	Breakaway bracket x Body	260	19	25
	Tilt steering support x Pedal bracket stay	185	13	18
	Upper bracket x Steering column tube	195	14	19
	Thrust stopper x Column tube	130	9	13
	Tilt steering pawl set bolt	120	9	12
	Tilt lever x Adjusting nut	340	25	33
Steering gear housing	Pinion bearing adjusting screw lock nut	1,150	83	113
	Rack guide spring cap lock nut	700	51	69
	Rack end x Rack	850	61	83
	Gear housing bracket x Body	440	32	43
	Tie rod x Knuckle arm	500	36	49
	Tie rod end lock nut	480	35	47

BODY

Torque Specifications

Part tightened		kg-cm	ft-lb	N·m
Seat				
Seat track x Body		375	27	37
Seat adjuster x Body		375	27	37
Seat track x Seat back		130	9	13
Seat adjuster x Seat back		375	27	37
Seat track x Seat cushion		185	13	18
Seat adjuster x Seat cushion		185	13	18
Seat outer adjuster x Seat back		375	27	37
Outer seat belt upper anchor set bolt		440	32	43
Outer seat belt lower anchor set bolt		440	32	43
Inner seat belt anchor set bolt		440	32	43
ELR set bolt	Lower side	440	32	43
	Upper side	80	69 in.-lb	7.8
CRS tether anchor bolt		210	15	21

LUBRICANT

Item	Capacity			Classification
	Liters	US qts	Imp. qts	
Engine oil				API service SF or SF/CC, multigrade viscosity and fuel-efficient oil
w/ Oil cooler				
Dry fill	3.8	4.0	3.3	
Drain and refill				
w/ Oil filter change	3.4	3.6	3.0	
w/o Oil filter change	3.1	3.3	2.7	
w/o Oil cooler				
Dry fill	3.7	3.9	3.3	
Drain and refill				
w/ Oil filter change	3.3	3.5	2.9	
w/o Oil filter change	3.0	3.2	2.6	
Manual transaxle oil (w/ Differential) C52	2.6	2.7	2.3	API GL-4 or GL-5 SAE 75W–90 or 80W–90
E51	4.2	4.4	3.7	AP1 GL-5 SAE 75W–90
Automatic transaxle fluid (w/Differential)				ATF DEXRON®II
4A-GE Dry fill	7.2	7.6	6.3	
Drain and refill	3.1	3.3	2.7	
4A-GZE Dry fill	7.9	8.4	7.0	
Drain and refill	3.1	3.3	2.7	
Steering gear housing grease	—			Molybdenum disulphide lithium base, NLGI No. 2
Brake fluid	—			SAE J1703, DOT 3

STANDARD BOLT TORQUE SPECIFICATIONS

Page

STANDARD BOLT TORQUE SPECIFICATIONS B-2

STANDARD BOLT TORQUE SPECIFICATIONS

HOW TO DETERMINE BOLT STRENGTH

	Mark	Class		Mark	Class
Hexagon head bolt	Bolt head No. 4– 5– 6– 7–	4T 5T 6T 7T	Stud bolt	No mark	4T
	No mark	4T			
Hexagon flange bolt w/washer hexagon bolt	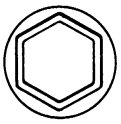 No mark	4T		Grooved	6T
Hexagon head bolt	Two protruding lines	5T			
Hexagon flange bolt w/washer hexagon bolt	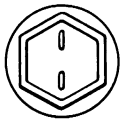 Two protruding lines	6T	Welded bolt	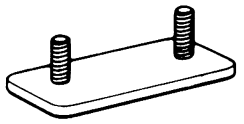	4T
Hexagon head bolt	Three protruding lines	7T			

SPECIFIED TORQUE FOR STANDARD BOLTS

Class	Diameter mm	Pitch mm	Specified torque					
			Hexagon head bolt			Hexagon flange bolt		
			kg-cm	ft-lb	N·m	kg-cm	ft-lb	N·m
4T	6	1	55	48 in.-lb	5.4	60	52 in.-lb	5.9
	8	1.25	130	9	13	145	10	14
	10	1.25	260	19	25	290	21	28
	12	1.25	480	35	47	540	39	53
	14	1.5	760	55	75	850	61	83
	16	1.5	1,150	83	113		–	
5T	6	1	65	56 in.-lb	6.4		–	
	8	1.25	160	12	16		–	
	10	1.25	330	24	32		–	
	12	1.25	600	43	59		–	
	14	1.5	930	67	91		–	
	16	1.5	1,400	101	137		–	
6T	6	1	80	69 in.-lb	7.8	90	78 in.-lb	8.8
	8	1.25	195	14	19	215	16	21
	10	1.25	400	29	39	440	32	43
	12	1.25	730	53	72	810	59	79
	14	1.5		–		1,250	90	123
7T	6	1	110	8	11	120	9	12
	8	1.25	260	19	25	290	21	28
	10	1.25	530	38	52	590	43	58
	12	1.25	970	70	95	1,050	76	103
	14	1.5	1,500	108	147	1,700	123	167
	16	1.5	2,300	166	226		–	

SST AND SSM

	Page
SST (SPECIAL SERVICE TOOLS)	C-2
SSM (SPECIAL SERVICE MATERIALS)	C-15

SST (SPECIAL SERVICE TOOLS)

NOTE: Classification

A = SST required for vehicle inspections and minor repairs and multipurpose SST.

B = SST required for major repairs involving disassembly of components.

C = SST required for rather special, less frequent work not of classifiable as either A or B.

Section / Classification / Part Name / Part No. / Illustration				EM	SC	FI	CO	LU	ST	CH	CL	MT	AT	FA	RA	BR	SR	BO
	09027-12140	(Angled Open End Wrench 12 x 14)	C					*1 ●										
	09032-00100	(Oil Pan Seal Cutter)	A					●										
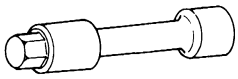	09043-88010	(Hexagon 8 mm Wrench)	A												*2 ●			
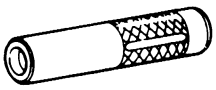	09201-41020	(Valve Stem Oil Seal Replacer)	B						*3 ●									
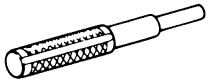	09201-60011	(Valve Guide Bushing Remover & Replacer)	A									*4 ●						
	09201-70010	(Valve Guide Bushing Remover & Replacer)	B	●														
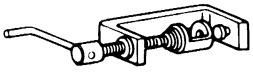	09202-70010	(Valve Spring Compressor)	A	●														
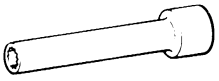	09205-16010	(Cylinder Head Bolt Wrench)	A	●														
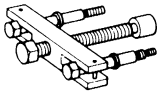	09213-31021	(Crankshaft Pulley Puller)	A	●														

Remarks:

* 1 Oil pressure sender gauge
* 2 4A-GZE only
* 3 Armature front bearing
* 4 Speedometer driven gear oil seal

SST (SPECIAL SERVICE TOOLS) (Cont'd)

Section / Classification / Part Name / Part No. / Illustration				EM	SC	FI	CO	LU	ST	CH	CL	MT	AT	FA	RA	BR	SR	BO
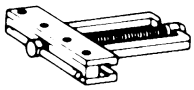	09213-36020	(Timing Gear Remover)	B									*1 ●						
	09213-70010	(Crankshaft Pulley Holding Tool)	A	●														
	09222-30010	(Connecting Rod Bushing Remover & Replacer)	B	●														
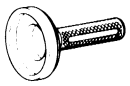	09223-15010	(Crankshaft Rear Oil Seal Replacer)	B									*2 ●			*3 ●			
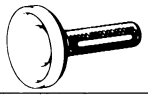	09223-41020	(Crankshaft Rear Oil Seal Replacer)	B	●														
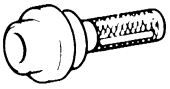	09223-50010	(Crankshaft Front Oil Seal Replacer)	B	*4 ●														
	09228-06500	(Oil Filter Wrench)	A					●										
	09240-00020	(Wire Gauge Set)	A										●					
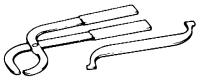	09248-55010	(Valve Clearance Adjust Tool Set)	A	●														
	09268-41045	(Injection Measuring Tool Set)	B			●												
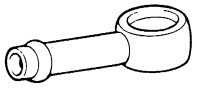	(09268-41080)	(No. 6 Union)				●												
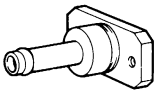	(09268-41090)	(No. 7 Union)				●												

Remarks:
- *1 No. 3 hub sleeve assembly
- *2 LH side oil seal (4A-GZE)
- *3 LH side oil seal (4A-GZE M/T)
- *4 Drive in the camshaft oil seals

SST (SPECIAL SERVICE TOOLS) (Cont'd)

Section / Classification / Part Name / Part No. / Illustration			EM	SC	FI	CO	LU	ST	CH	CL	MT	AT	FA	RA	BR	SR	BO
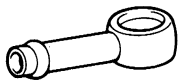	(90405-09015)	(No. 1 Union)				●											
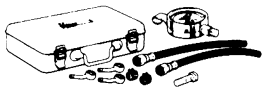	09268-45012	(EFI Fuel Pressure Gauge)	A			●											
	09285-76010	(Injection Pump Camshaft Bearing Cone Replacer)	C						*1 ●								
	09286-46011	(Injection Pump Spline Shaft Puller)	C					*2 ●	*3 ●								
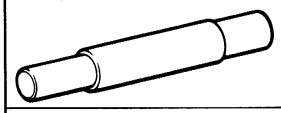	09301-17010	(Clutch Guide Tool)	A							*4 ●							
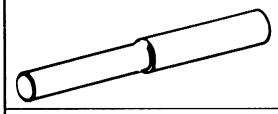	09301-32010	(Clutch Guide Tool)	A							*5 ●							
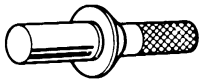	09302-20021	(Clutch Diaphragm Spring Height No. 2 Gauge)	B							●							
	09308-00010	(Oil Seal Puller)	A								*6 ●	●	●	●			
	09309-12020	(5th Driven Gear Replacer)	B								●						
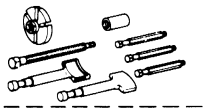	09310-17010	(Transaxle Gear Remover & Replacer)	B								●						
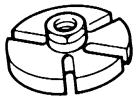	(09310-07010)	(Plate)									●						
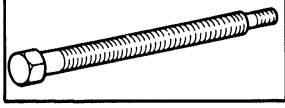	(09310-07020)	(Center Bolt)									●						

Remarks:
- *1 Rotor bearing
- *2 Armature bearing
- *3 Rear end frame
- *4 4A-GZE only
- *5 4A-GE only
- *6 Input shaft front bearing and output shaft front bearing

SST (SPECIAL SERVICE TOOLS) (Cont'd)

Section / Classification / Part Name / Part No. / Illustration			EM	SC	FI	CO	LU	ST	CH	CL	MT	AT	FA	RA	BR	SR	BO
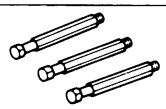	(09310-07030)	(Set Bolt)									●						
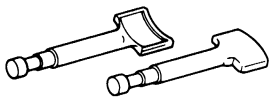	(09310-07040)	(Claw)									●						
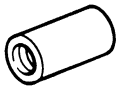	(09310-07050)	(Adaptor)									●						
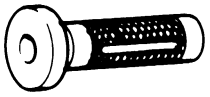	09310-35010	(Countershaft Bearing Replacer)	B								*1 ●		*2 ●	*3 ●			
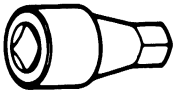	09313-30021	(Detent Ball Plug Socket)	A								●						
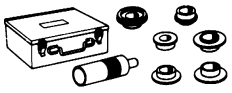	09316-60010	(Transmission & Transfer Bearing Replacer)	B								●			●			
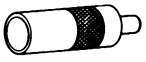	(09316-00010)	(Replacer Pipe)									*4 ●			*5 ●			
	(09316-00020)	(Replacer "A")									●						
	(09316-00040)	(Replacer "C")									●						
	(09316-00050)	(Replacer "D")									●						
	(09316-00070)	(Replacer "F")									●						
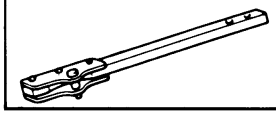	09330-00021	(Companion Flange Holding Tool)	A	*6 ●								●					

Remarks:
- *1 Input shaft front bearing and output shaft front bearing
- *2 Front axle hub
- *3 Rear axle hub
- *4 RH side oil seal (4A-GZE)
- *5 RH side oil seal (4A-GZE M/T)
- *6 Crankshaft pulley holding tool

SST (SPECIAL SERVICE TOOLS) (Cont'd)

Section / Classification / Part Name / Part No. / Illustration				EM	SC	FI	CO	LU	ST	CH	CL	MT	AT	FA	RA	BR	SR	BO
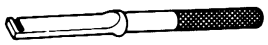	09333-00013	(Clutch Diaphragm Spring Aligner)	B								●							
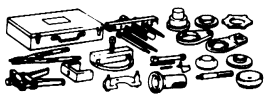	09350-32014	(TOYOTA Automatic Transmission Tool Set)	B									●	●		●			
	(09308-10010)	(Oil Seal Puller)											●					
	(09351-32010)	(One-way Clutch Test Tool)											●					
	(09351-32020)	(Stator Stopper)											●					
	(09351-32032)	(Counter Driven Gear Holding Tool)											●					
	(09351-32040)	(No. 1 Piston Spring Compressor)											●					
	(09351-32050)	(Snap Ring Expander)											●					
	(09351-32061)	(Oil Pump Puller)											●					
	(09351-32070)	(No. 2 Piston Spring Compressor)											●					
	(09351-32090)	(Oil Seal Remover & Replacer)											●					
	(09351-32100)	(Drive Pinion Bearing Replacer)											●					

SST (SPECIAL SERVICE TOOLS) (Cont'd)

Section / Classification / Part Name / Part No. / Illustration			EM	SC	FI	CO	LU	ST	CH	CL	MT	AT	FA	RA	BR	SR	BO
	(09351-32111)	(Side Bearing Race Replacer)									*1 ●	*2 ●		*3 ●			
	(09351-32120)	(Overdrive Bearing Replacer)										●					
	(09351-32130)	(Handle)									●	●		●			
	(09351-32140)	(Oil Seal Replacer)										●					
	(09351-32150)	(Oil Seal Replacer)									*4 ●	●		*5 ●			
	(09351-32170)	(Lock Nut Wrench)										●					
	(09351-32180)	(Bearing Replacer)										●					
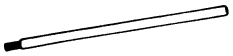	(09351-32190)	(Measure Terminal)										●					
	09502-10012	(Differential Side Bearing Puller)	B									●					
	09504-00011	(Differential Side Bearing Adjusting Nut Wrench)	B		*6 ●												
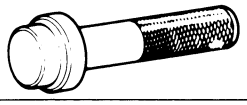	09517-30010	(Rear Axle Shaft Oil Seal Replacer)	B					*7 ●									
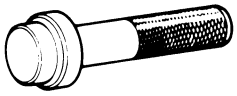	09517-36010	(Rear Axle Shaft Oil Seal Replacer)	B								*8 ●						

Remarks:

- *1 LH side oil seal (4A-GE)
- *2 LH side oil seal
- *3 LH side oil seal (Ex. 4A-GZE M/T)
- *4 RH side oil seal (4A-GE)
- *5 RH side oil seal (Ex. 4A-GZE M/T)
- *6 Supercharger clutch hub (4A-GZE only)
- *7 Crankshaft front oil seal
- *8 Control shaft oil seal

SST (SPECIAL SERVICE TOOLS) (Cont'd)

Section / Classification / Part Name / Part No. / Illustration			EM	SC	FI	CO	LU	ST	CH	CL	MT	AT	FA	RA	BR	SR	BO
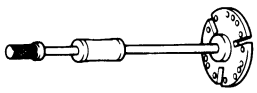	09520-32012	(Differential Side Gear Shaft Puller) A									●			●			
	09555-55010	(Differential Drive Pinion Bearing Replacer) B										●					
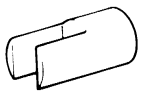	09564-32011	(Differential Preload Adapter) B									●	●					
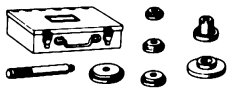	09608-12010	(Front Hub & Drive Pinion Bearing Replacer Set) B									●						
	(09608-00020)	(Remover & Replacer Handle)									●						
	(09608-00070)	(Drive Pinion Rear Bearing Cone Replacer)									＊1 ●						
	(09608-00080)	(Differential Side Bearing Cone Replacer)									＊2 ●						
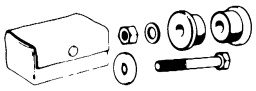	09608-16041	(Front Hub Bearing Adjusting Tool) B												●			
	(09608-02020)	(Bolt & Nut)												●			
	(09608-02040)	(Retainer)												●			
	09608-20012	(Front Hub & Drive Pinion Bearing Tool Set) B							●		●						
	(09608-00030)	(Replacer)							＊3 ●								

Remarks:
＊1 Input shaft rear bearing and output shaft rear bearing
＊2 Input shaft front oil seal
＊3 Front bearing

SST (SPECIAL SERVICE TOOLS) (Cont'd)

Section / Classification / Part Name / Part No. / Illustration				EM	SC	FI	CO	LU	ST	CH	CL	MT	AT	FA	RA	BR	SR	BO
	(09608-03020)	(Handle)										●						
	(09608-03090)	(Replacer)										* 1 ●						
	09608-30012	(Front Hub & Drive Pinion Bearing Tool Set)	B											●				
	(09608-04020)	(Handle)												●				
	(09608-04060)	(Front Hub Outer Bearing Cup Replacer)												●				
	(09608-04070)	(Front Inner Bearing Cup Replacer)												●				
	09608-32010	(Steering Knuckle Oil Seal Replacer)	B												●			
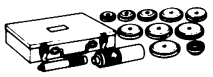	09608-35014	(Axle Hub & Drive Pinion Bearing Tool Set)	B												●			
	(09608-06020)	(Handle)													●			
	(09608-06180)	(Drive Pinion Rear Bearing Cup Replacer)													●			
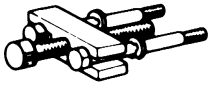	09609-20011	(Steering Wheel Puller)	A														●	
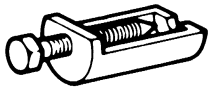	09610-20012	(Pitman Arm Puller)	A										●	●	●			

Remark:
* 1 LH, RH side bearing outer race

SST (SPECIAL SERVICE TOOLS) (Cont'd)

Section / Classification / Part Name / Part No. / Illustration				EM	SC	FI	CO	LU	ST	CH	CL	MT	AT	FA	RA	BR	SR	BO
	09610-55012	(Pitman Arm Puller)	A												●			
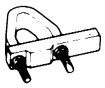	09612-00012	(Rack & Pinion Steering Rack Housing Stand)	B														●	
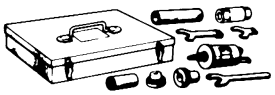	09612-10093	(Steering Gear Housing Overhaul Tool Set)	B														●	
	(09617-10010)	(Steering Pinion Bearing Adjusting Screw Lock Nut Wrench)															＊1 ●	
	(09628-10020)	(Ball Joint Lock Nut Wrench)															＊2 ●	
	09612-22011	(Tilt Handle Bearing Replacer)	B									＊3 ●						
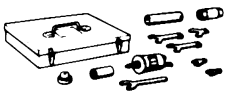	09612-24013	(Steering Gear Housing Overhaul Tool Set)	B														●	
	(09612-10022)	(Hexagon Wrench)															●	
	(09612-10061)	(Steering Pinion Bearing Replacer)															●	
	(09616-10010)	(Steering Pinion Bearing Adjusting Socket)															●	
	(09616-10020)	(Steering Pinion Bearing Adjusting Screw Wrench)															●	
	(09617-24010)	(Steering Rack Wrench)															●	

Remarks:
＊1 Steering rack guide spring cap lock nut
＊2 Steering rack end
＊3 No. 3 hub sleeve assembly

SST (SPECIAL SERVICE TOOLS) (Cont'd)

Section / Classification / Part Name / Part No. / Illustration				EM	SC	FI	CO	LU	ST	CH	CL	MT	AT	FA	RA	BR	SR	BO
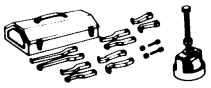	09612-65014	(Steering Worm Bearing Puller)	B									●						
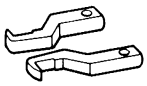	(09612-01020)	(Claw "B")										*1 ●						
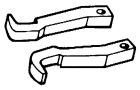	(09612-01060)	(Claw "E")										*1 ●						
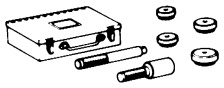	09620-30010	(Steering Gear Box Replacer Set)	B														●	
	(09625-30010)	(Steering Main Shaft Bearing Replacer)															●	
	(09627-30010)	(Steering Sector Shaft Bushing Replacer)															*2 ●	
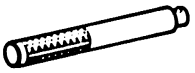	(09631-00020)	(Handle)															●	
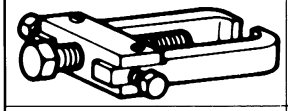	09628-62011	(Ball Joint Puller)	A											●			*3 ●	
	09630-24013	(Steering Rack Oil Seal Tool Set)	B														●	
	(09620-24010)	(Valve Cap Oil Seal Remover)															*4 ●	
	(09620-24020)	(Valve Cap Oil Seal Replacer)															*4 ●	
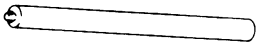	09631-12020	(Handle)	B										●		●			

Remarks:
- *1 LH, RH side bearing outer race
- *2 Steering main shaft upper bearing and pinion lower bearing
- *3 Tie rod end
- *4 Pinion oil seal

SST (SPECIAL SERVICE TOOLS) (Cont'd)

Section / Classification / Part Name / Part No. / Illustration				EM	SC	FI	CO	LU	ST	CH	CL	MT	AT	FA	RA	BR	SR	BO
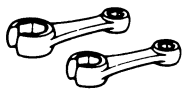	09631-22020	(Power Steering Hose Nut 14 x 17 Wrench Set)	A			●												
	09649-17010	(Steering Knuckle Tool)	B											●				
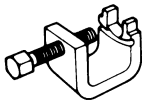	09650-17011	(Hub Bolt Remover)	A											●	●			
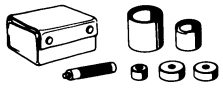	09710-14012	(Rear Suspension Bushing Tool Set)	B												●			
	(09710-00050)	(Handle)													●			
	09719-14020	(Rear Disc Brake Tool Set)	A													●		
	(09719-00020)	(Piston Driver)														●		
	09720-00011	(Shock Absorber Overhaul Tool Set)	B											●	●			
	(09721-00071)	(Front Shock Absorber Ring Nut Wrench)												●	●			
	09726-10010	(Lower Suspension Arm Bushing Remover & Replacer)	B												●			
	(09726-00030)	(Spacer)													*1 ●			
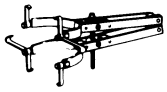	09727-22032	(Front Coil Spring Compressor)	B											●	●			

Remark:
*1 4A-GZE only

SST (SPECIAL SERVICE TOOLS) (Cont'd)

Section / Classification / Part Name / Part No. / Illustration				EM	SC	FI	CO	LU	ST	CH	CL	MT	AT	FA	RA	BR	SR	BO
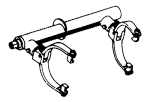	09727-30020	(Coil Spring Compressor)	B											●	●			
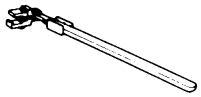	09729-22031	(Front Spring Upper Seat Holder)	B											●				
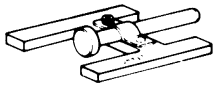	09737-00010	(Brake Booster Push Rod Gauge)	A													●		
	09751-36011	(Brake Tube Union Nut 10 x 12 Wrench)	A								*1 ●					●		
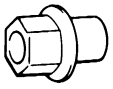	09756-00010	(Adjusting Bolt Guide Nut)	B													●		
	09812-00010	(Door Hinge Set Bolt Wrench)	C															●
	09814-22010	(Rear Wiper Pivot Shaft Lock Nut Wrench)	A		*2 ●													
	09817-16011	(Back-up Light Switch Tool)	A									●						
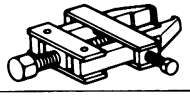	09820-00021	(Alternator Rear Bearing Puller)	B							●								
	09820-63010	(Alternator Pulley Set Nut Wrench Set)	B							●								
	09842-30050	(Wiring "A" EFI Inspection)	B			●												
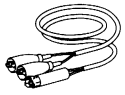	09842-30060	(Wiring "E" EFI Inspection)	B			*3 ●												

Remarks:
- *1 Clutch tube
- *2 Supercharger clutch stator (4A-GZE only)
- *3 4A-GE only

SST (SPECIAL SERVICE TOOLS) (Cont'd)

Section / Classification / Part Name / Part No. / Illustration				EM	SC	FI	CO	LU	ST	CH	CL	MT	AT	FA	RA	BR	SR	BO
	09842-30070	(Wiring "F" EFI Inspection)	B			*1 ●												
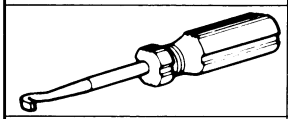	09921-00010	(Spring Tension Tool)	A									*2 ●						
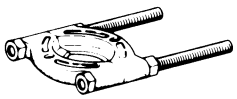	09950-00020	(Bearing Remover)	B									*3 ●	●					
	09950-20017	(Universal Puller)	A									●		●	●		●	
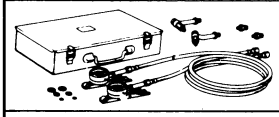	09992-00094	(Oil Pressure Gauge Set)	A										●					
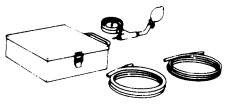	09992-00241	(Turbocharger Pressure Gauge)	C		*4 ●													

Remarks:
* 1 4A-GE only
* 2 Speedometer driven gear oil seal
* 3 No. 2 hub sleeve assembly and 3rd driven gear
* 4 Supercharger pressure

NOTE: For reference to SSTs for the Air Conditioning System see page AC-10.

SSM (SPECIAL SERVICE MATERIALS)

Part Name	Part No.	Sec.	Use etc.
Seal packing or equivalent	08826-00080	EM	Cylinder head x Cylinder head cover Cylinder head x No. 1 camshaft bearing cap
		LU	Oil pan Baffle plate
Seal packing 1281, Three bond 1281 or equivalent	08826-00090	MT	Transaxle case, transmission case and case cover
Adhesive 1324, Three bond 1324 or equivalent	08833-00070	AT	Oil gallery cover set screw
Adhesive 1344, Three bond 1344, Loctite 242 or equivalent	08833-00080	MT	Straight screw plug Control shaft cover bolt
		SR	Pinion bearing adjusting screw Pinion bearing adjusting screw lock nut Rack guide spring cap Rack guide spring cap lock nut
Adhesive 1131, Three bond 1131, Loctite 518 or equivalent	08833-00090	AT	Transaxle housing x Transaxle case Transaxle rear cover x Transaxle case
Seal packing 1121, Three bond 1121 or equivalent	08826-00801	RA	The contact surface of the outer race and cover of the drive shaft
Dupont paste No. 4817	–	BE	Rear window defogger wire
Super adhesive	08850-00051	BO	Side body moulding
Windshield glass adhesive set No. 15	08850-00070	BO	Windshield glass, Rear window glass (0 – 15°C or 32 – 59°F)
Windshield glass adhesive set No. 35	08850-00080	BO	Windshield glass, Rear window glass (15 – 35°C or 59 – 95°F)
Windshield glass adhesive set No. 45	08850-00090	BO	Windshield glass, Rear window glass (35 – 45°C or 95 – 113°F)
Dam kit	04562-30040	BO	Windshield glass, Rear window glass
Three cement black	08833-00030	BO	Windshield glass, Back door window glass
Butyl tape set	08850-00065	BO	Quarter window glass

NOTE: For reference to SSTs for the Air Conditioning System see page AC-10.

ELECTRICAL WIRING DIAGRAMS

HOW TO READ THIS SECTION

PIN NUMBER

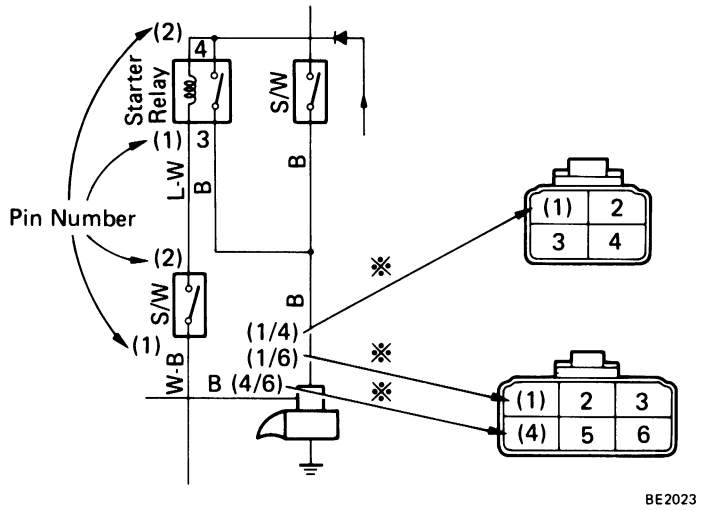

※ When connectors with different numbers of terminals are used with the same parts, the pin number and the numbers of terminals are specified.
e.g. (1/4) = No. 1 pin/4 terminals connector

Numbered in order from upper left to lower right

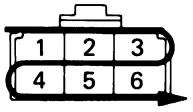

Female

Numbered in order from upper right to lower left

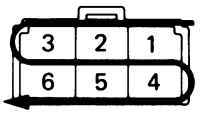

Male

BE0832

Male & female connectors distinguished by shape of their internal pins.

- All connectors are shown from the open end, and the lock is on top.

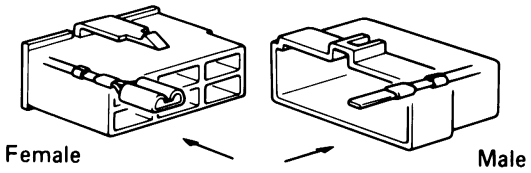

BE0833

JUNCTION BLOCK OR RELAY BLOCK

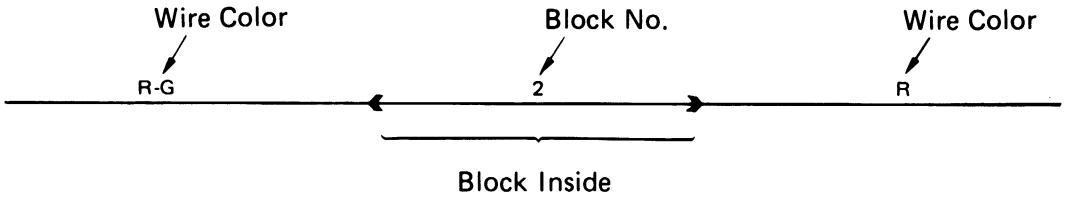

WIRE COLOR

Wire colors are indicated by an alphabetical code.

B = Black	BR = Brown	G = Green	GR = Gray	L = Blue
LG = Light Green	O = Orange	P = Pink	R = Red	V = Violet
W = White	Y = Yellow			

The 1st letter indicates the basic wire color and the 2nd indicates the stripe color.

Example: R-G indicates a Red wire with a Green stripe.

ABBREVIATION

The following abbreviations are used in this wiring diagram.

A/C	= Air Conditioner	M/T	= Manual Transaxle
A/T	= Automatic Transaxle	O/D	= Overdrive
CB	= Circuit Breaker	RH	= Right-hand
ECU	= Electronic Controlled Unit	SW	= Switch
EFI	= Electronic Fuel injection	T-VIS	= Toyota Variable Induction System
FL	= Fusible Link	VSV	= Vacuum Switching Valve
J/B	= Junction Block	w/	= With
LH	= Left-hand	w/o	= Without

SYSTEM INDEX

MR2 — 1989 Model (Page 1 to Page 6)

SYSTEMS	LOCATION
Air Conditioner, Cooler and Heater	2-6
Auto Antenna	5-7
Back-up Lights	3-8
Charging	1-3 6-2 (4A-GZE)
Cigarette Lighter	5-6
Clock	5-5
Combination Meter	3-2
Cruise Control	4-6
Door Locks	4-4
ECT	3-7
Engine Compartment Cooling Fan	1-5
Front Wiper and Washer	4-1
Fuel Control System	6-7
Headlights	5-3
Horn	4-1
Idle-up	2-1
Interior Lights	5-5
Power Source	1-1 6-1 (4A-GZE)
Power Windows	4-2
Radiator Fan	2-2
Radio and Tape Player	5-8
Rear Window Defogger	3-4
Remote Control Mirrors	5-6
Starting	1-2 6-2 (4A-GZE)
Stop Lights	4-7
Taillights and Illumination	5-1
TCCS	1-4 (4AGE) 1-7 (4A-GE) 6-5 (4A-GZE) 6-8 (4A-GZE)
Turn Signal and Hazard	3-5
Unlock and Seat Belt Warning	4-8

MR2 ELECTRICAL WIRING DIAGRAM-1989 Model (Page 1 to Page 6)

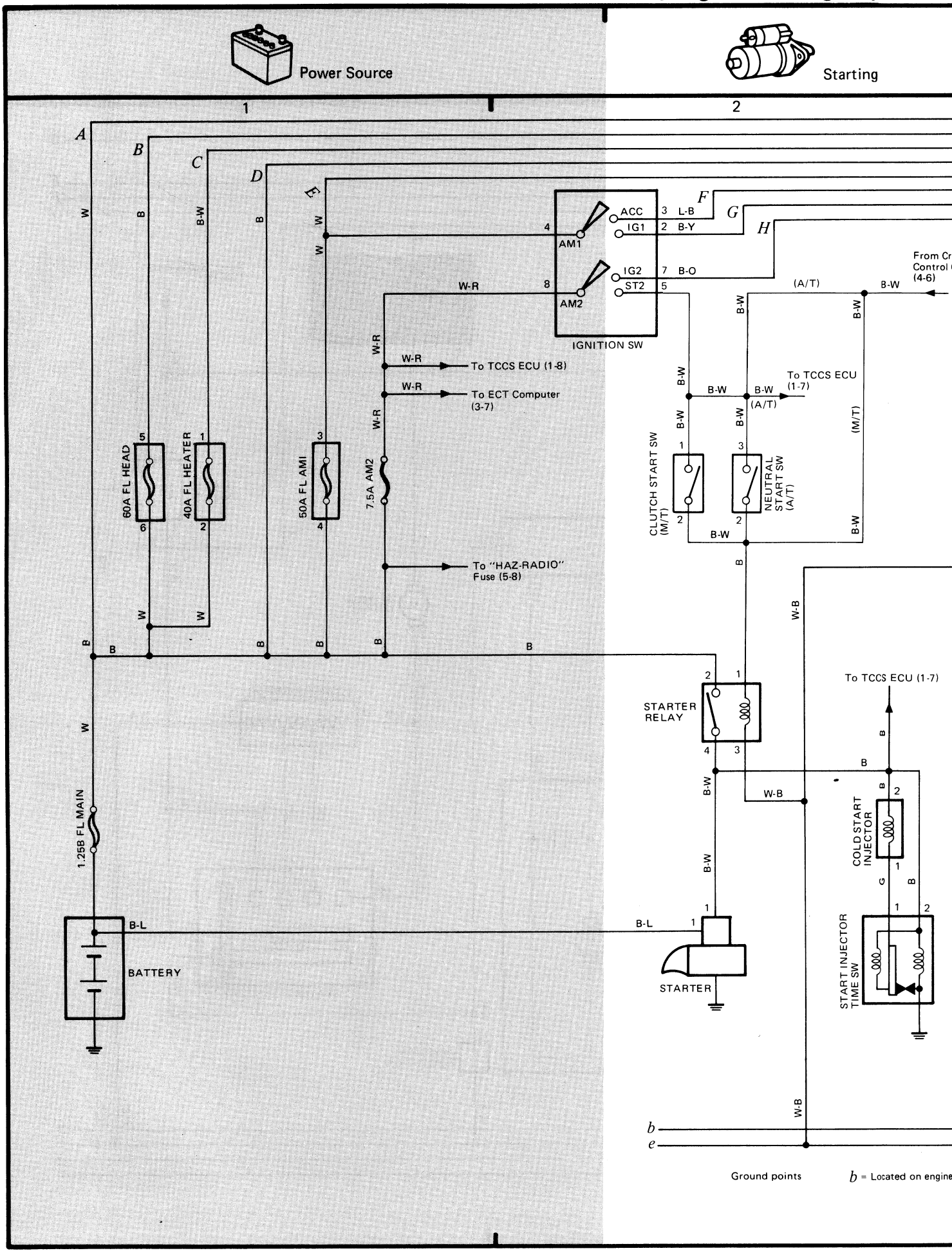

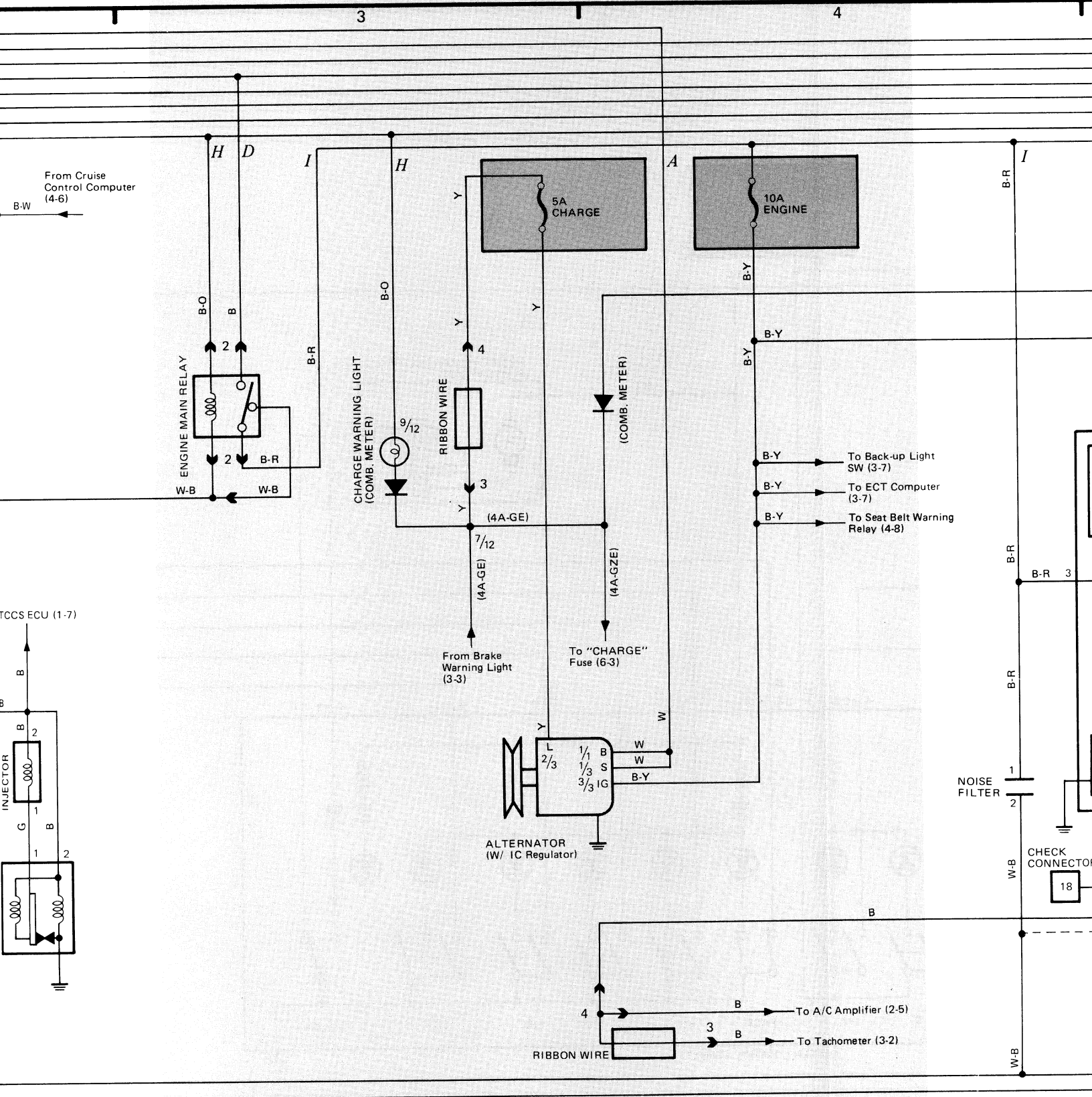

= Located on engine block

e = Located on center of back panel

Engine Compartment Cooling Fan

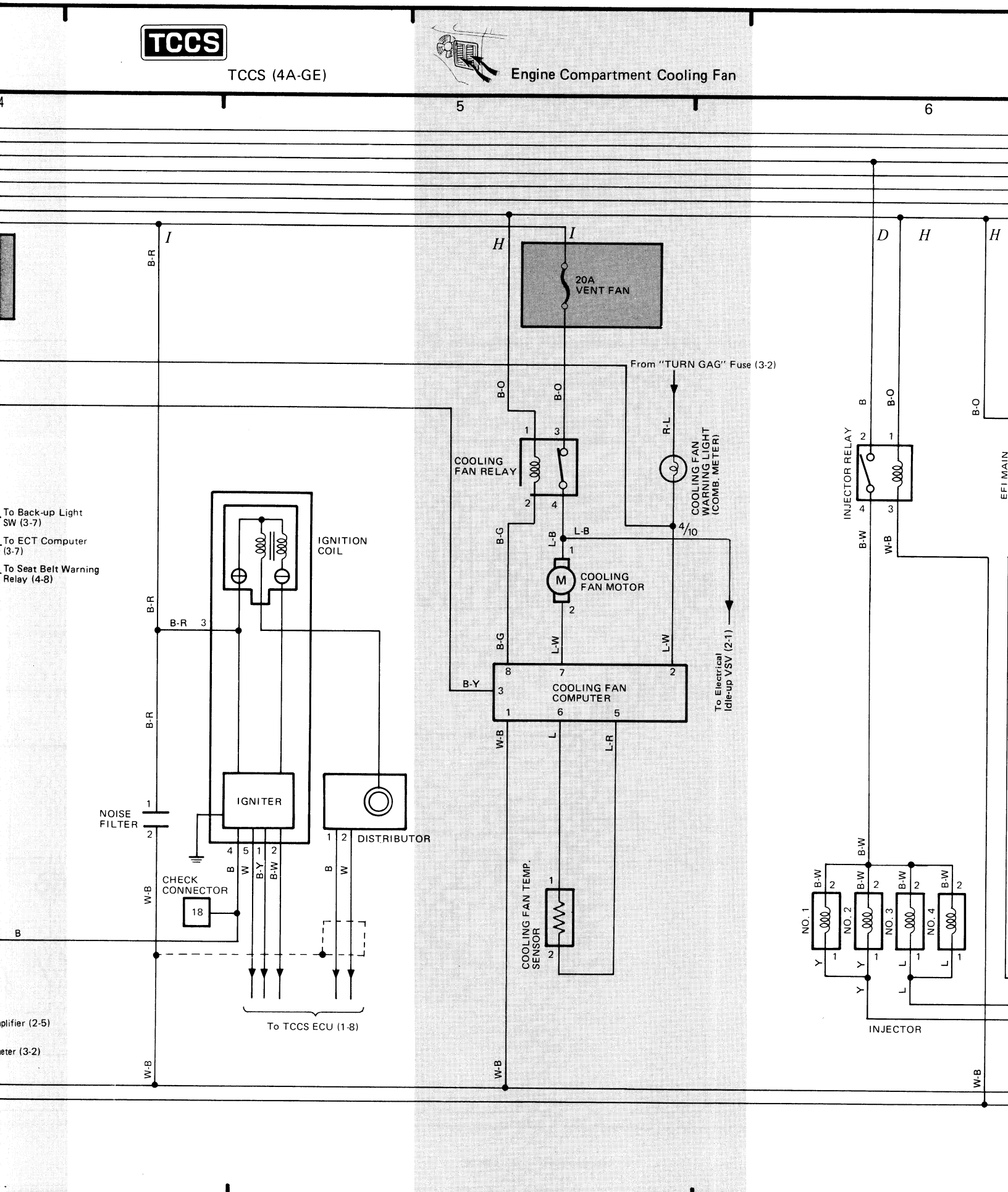

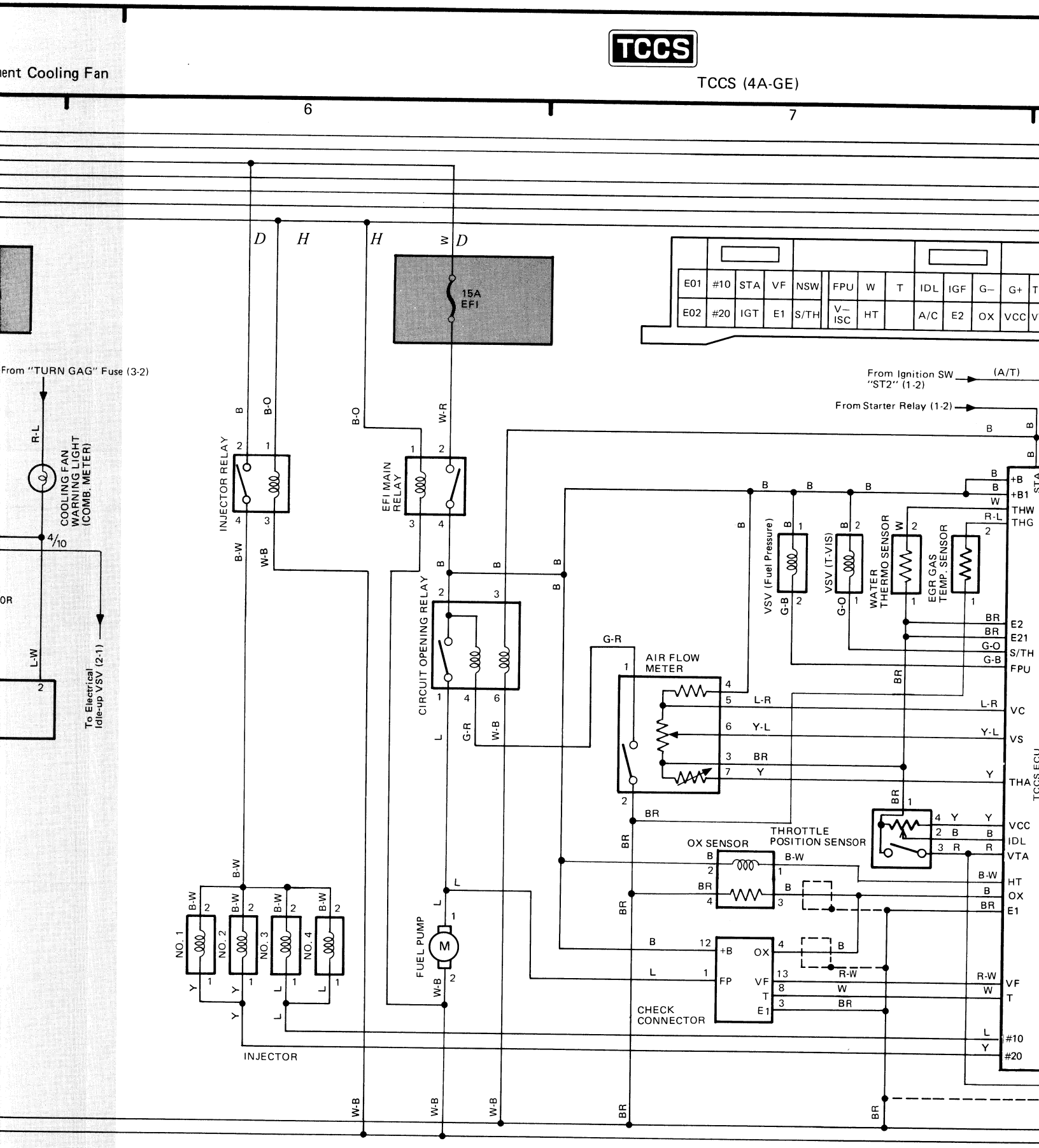
6
7
15A EFI
From "TURN GAG" Fuse (3-2)
COOLING FAN WARNING LIGHT (COMB. METER)
To Electrical Idle-up VSV (2-1)
INJECTOR RELAY
EFI MAIN RELAY
CIRCUIT OPENING RELAY
FUEL PUMP
NO. 1
NO. 2
NO. 3
NO. 4
INJECTOR
From Ignition SW "ST2" (1-2)
(A/T)
From Starter Relay (1-2)
VSV (Fuel Pressure)
VSV (T-VIS)
WATER THERMO SENSOR
EGR GAS TEMP. SENSOR
AIR FLOW METER
OX SENSOR
THROTTLE POSITION SENSOR
CHECK CONNECTOR
TCCS ECU
E01 #10 STA VF NSW FPU W T IDL IGF G− G+
E02 #20 IGT E1 S/TH V−ISC HT A/C E2 OX VCC

TCCS

TCCS (4A-GE)

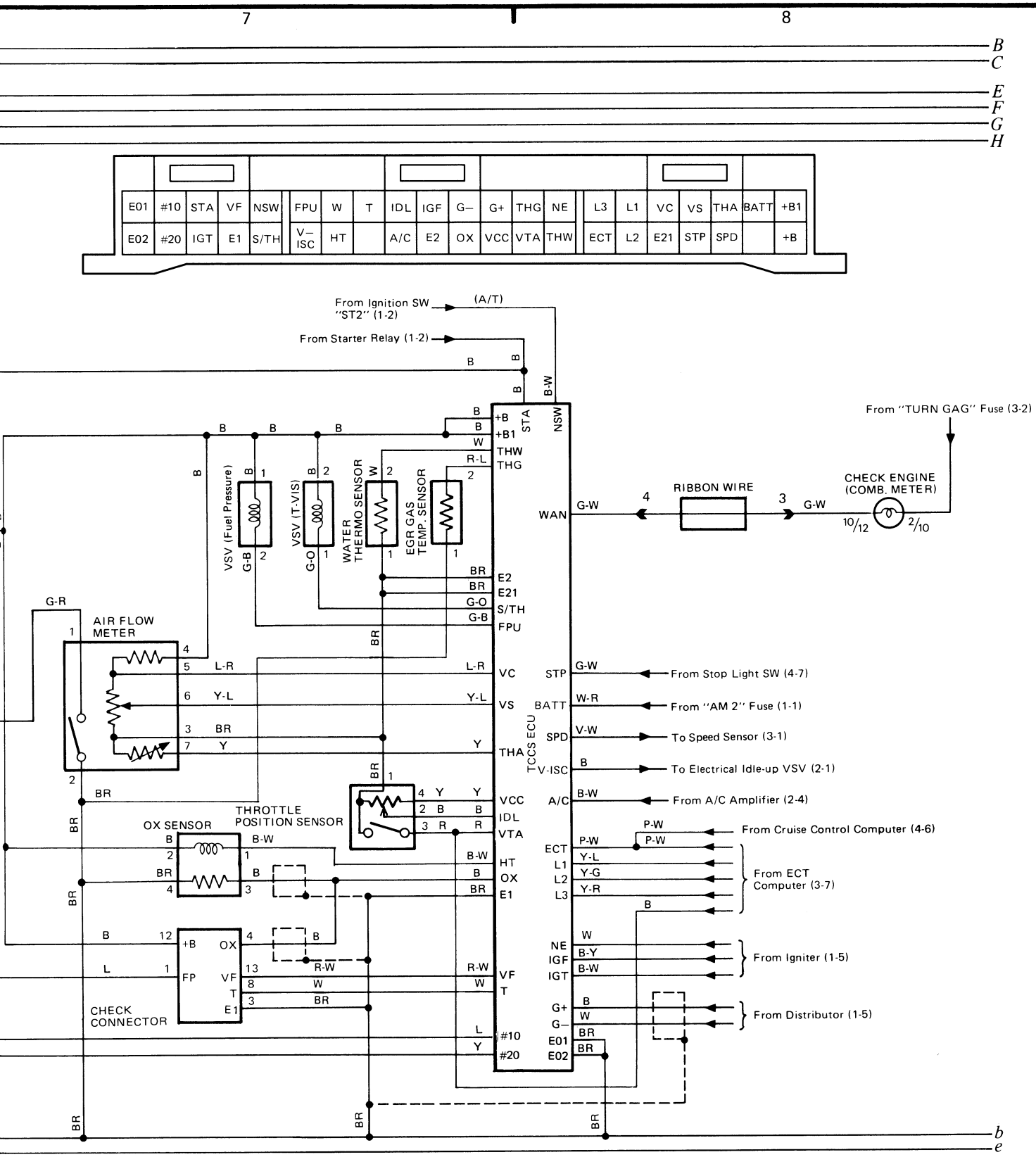

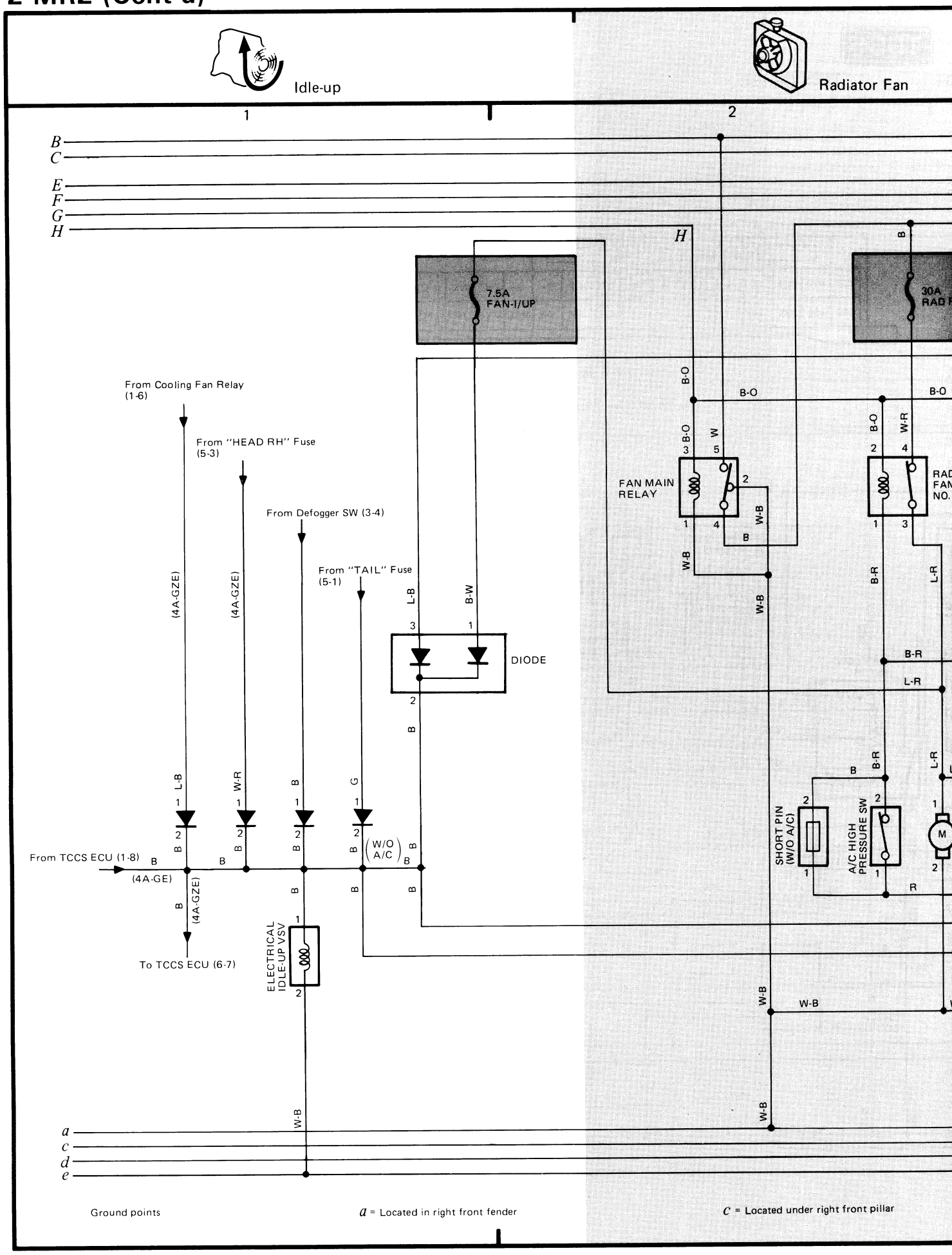
Idle-up
Radiator Fan
1
2
B
C
E
F
G
H
7.5A FAN-I/UP
30A RAD F
From Cooling Fan Relay (1-6)
From "HEAD RH" Fuse (5-3)
From Defogger SW (3-4)
From "TAIL" Fuse (5-1)
FAN MAIN RELAY
RAD FAN NO.
DIODE
SHORT PIN (W/O A/C)
A/C HIGH PRESSURE SW
From TCCS ECU (1-8)
(4A-GE)
(4A-GZE)
(W/O A/C)
ELECTRICAL IDLE-UP VSV
To TCCS ECU (6-7)
a
c
d
e
Ground points
a = Located in right front fender
c = Located under right front pillar

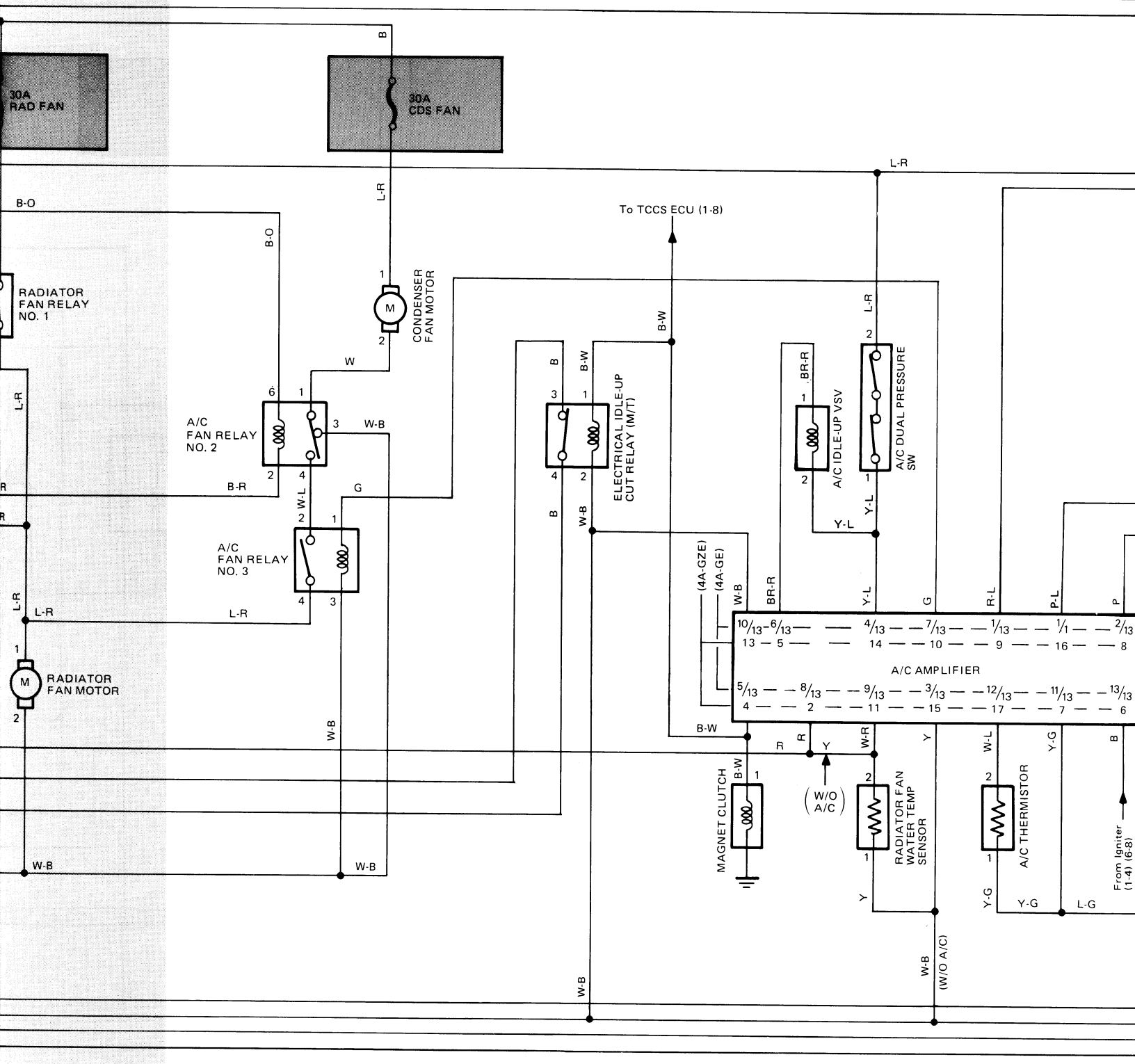

d = Located under left front pillar

e = Located on center of back panel

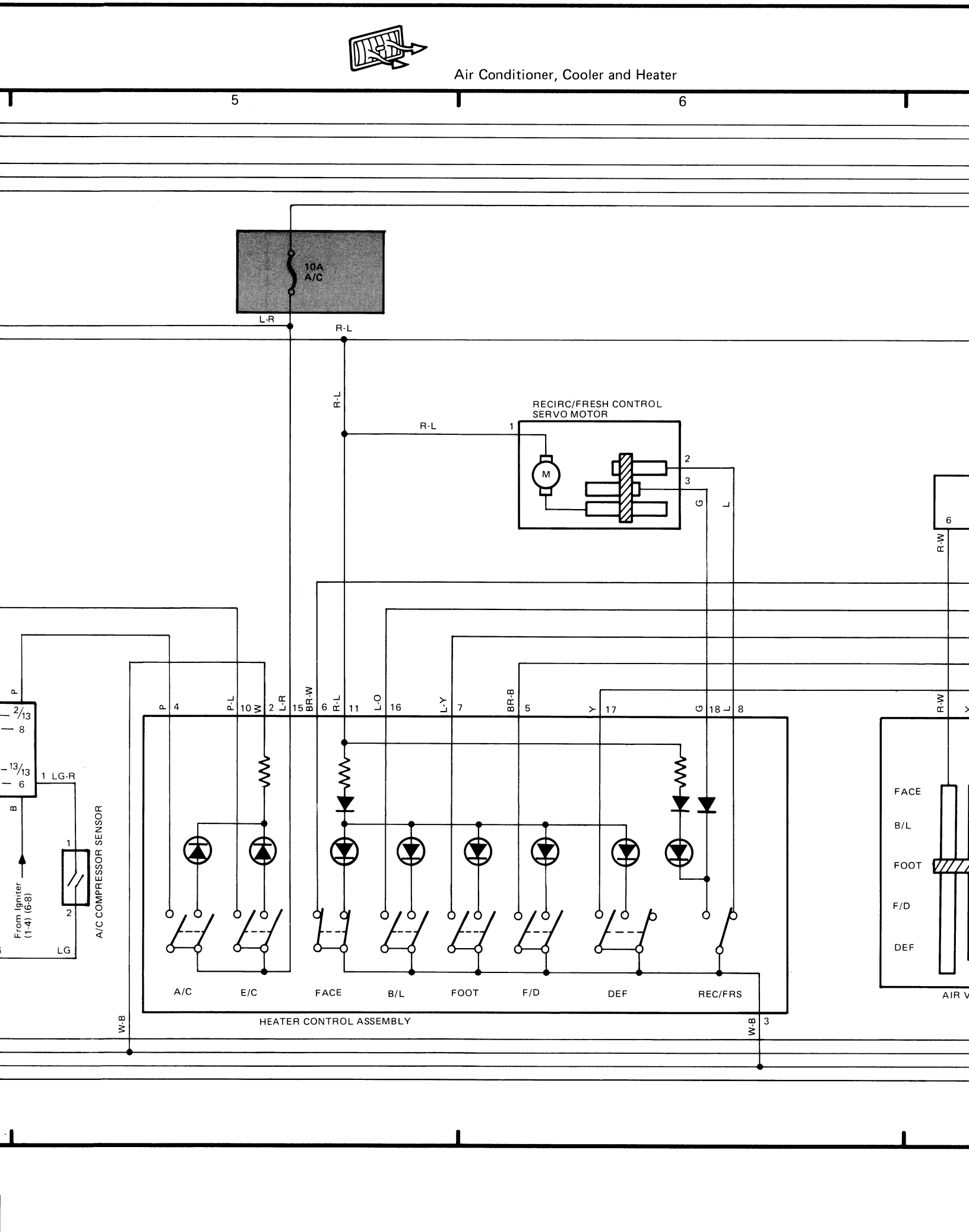
5
6
10A
A/C
L-R
R-L
R-L
RECIRC/FRESH CONTROL
SERVO MOTOR
R-L
1
M
2
3
G
L
6
R-W
P
2/13
8
13/13
6
1 LG-R
B
1
2
From Igniter
(1-4) (6-8)
LG
A/C COMPRESSOR SENSOR
P 4
P-L 10
W 2
L-R 15
BR-W 6
R-L 11
L-O 16
L-Y 7
BR-B 5
Y 17
G 18
L 8
R-W
FACE
B/L
FOOT
F/D
DEF
A/C
E/C
FACE
B/L
FOOT
F/D
DEF
REC/FRS
HEATER CONTROL ASSEMBLY
W-B
W-B 3
AIR V

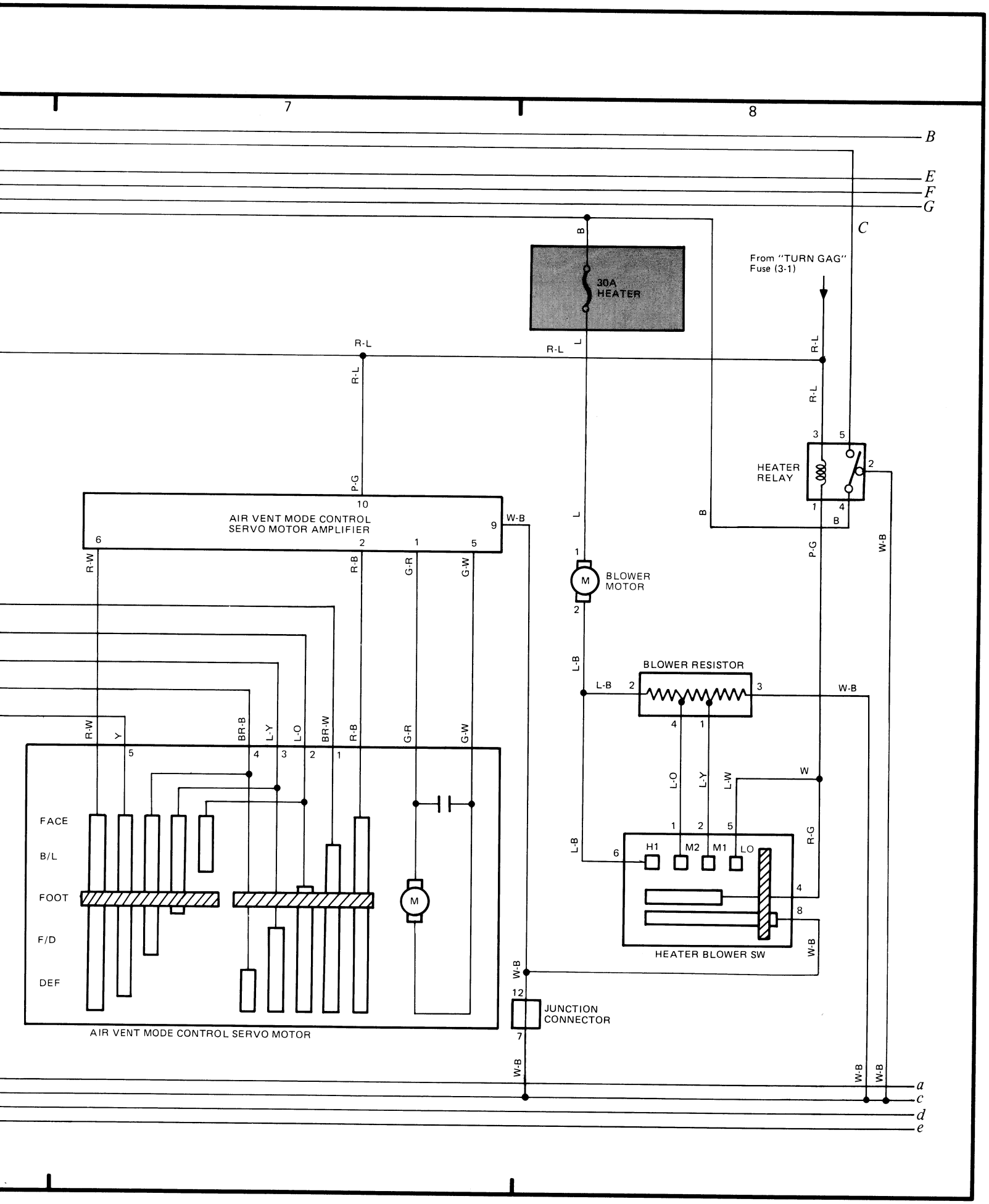
7
8
B
E
F
G
C
30A
HEATER
From "TURN GAG"
Fuse (3-1)
R-L
R-L
R-L
R-L
R-L
P-G
10
AIR VENT MODE CONTROL
SERVO MOTOR AMPLIFIER
9
W-B
6
2
1
5
R-W
R-B
G-R
G-W
HEATER
RELAY
3
5
2
1
4
B
B
P-G
W-B
L
L
1
M
BLOWER
MOTOR
2
L-B
BLOWER RESISTOR
L-B
2
3
W-B
4
1
R-W
Y
BR-B
L-Y
L-O
BR-W
R-B
G-R
G-W
5
4
3
2
1
L-O
L-Y
L-W
W
1
2
5
L-B
6
H1
M2
M1
LO
R-G
4
8
W-B
HEATER BLOWER SW
FACE
B/L
FOOT
F/D
DEF
M
AIR VENT MODE CONTROL SERVO MOTOR
W-B
12
JUNCTION
CONNECTOR
7
W-B
W-B
W-B
a
c
d
e

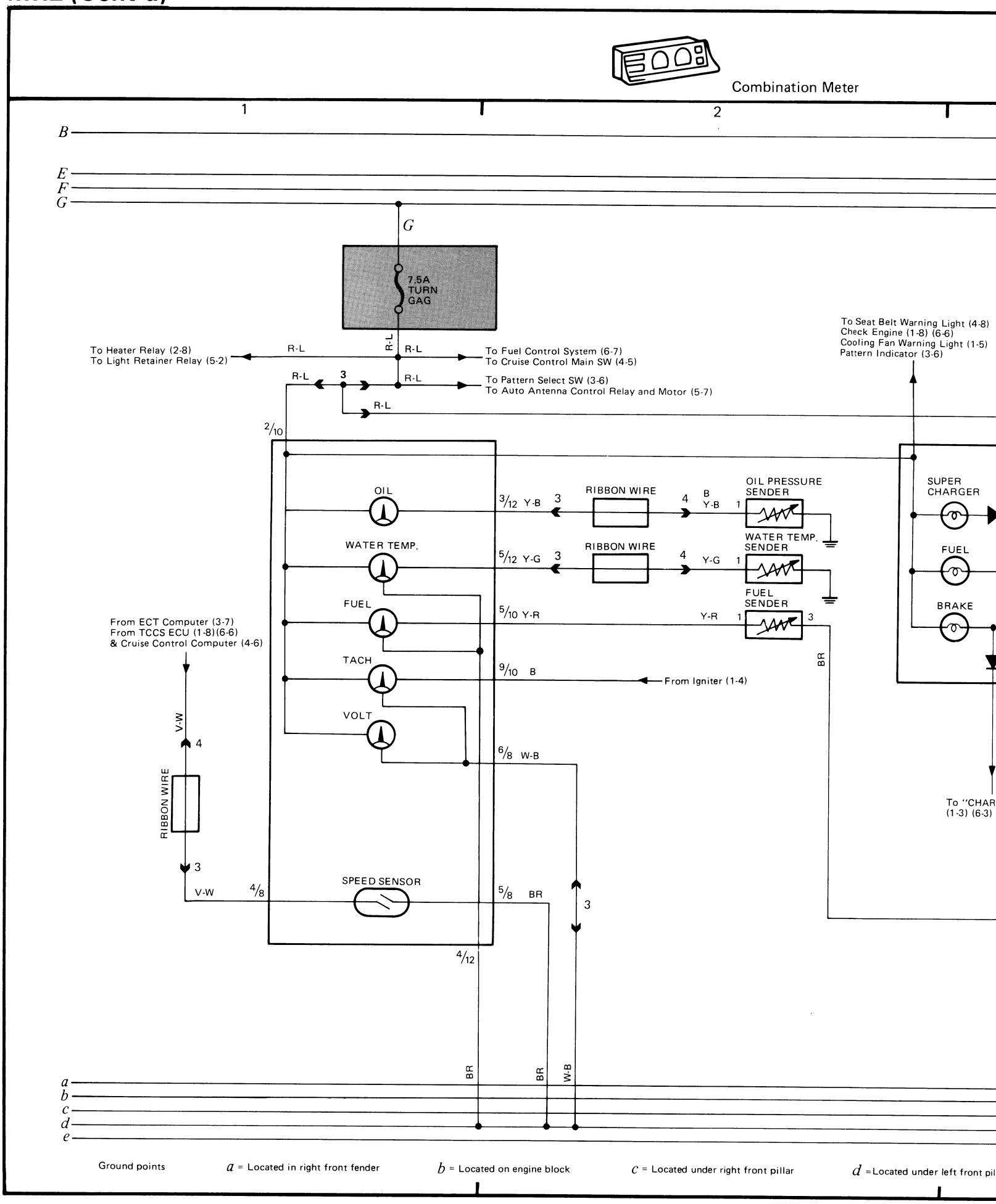

Ground points

a = Located in right front fender

b = Located on engine block

c = Located under right front pillar

d =Located under left front pil

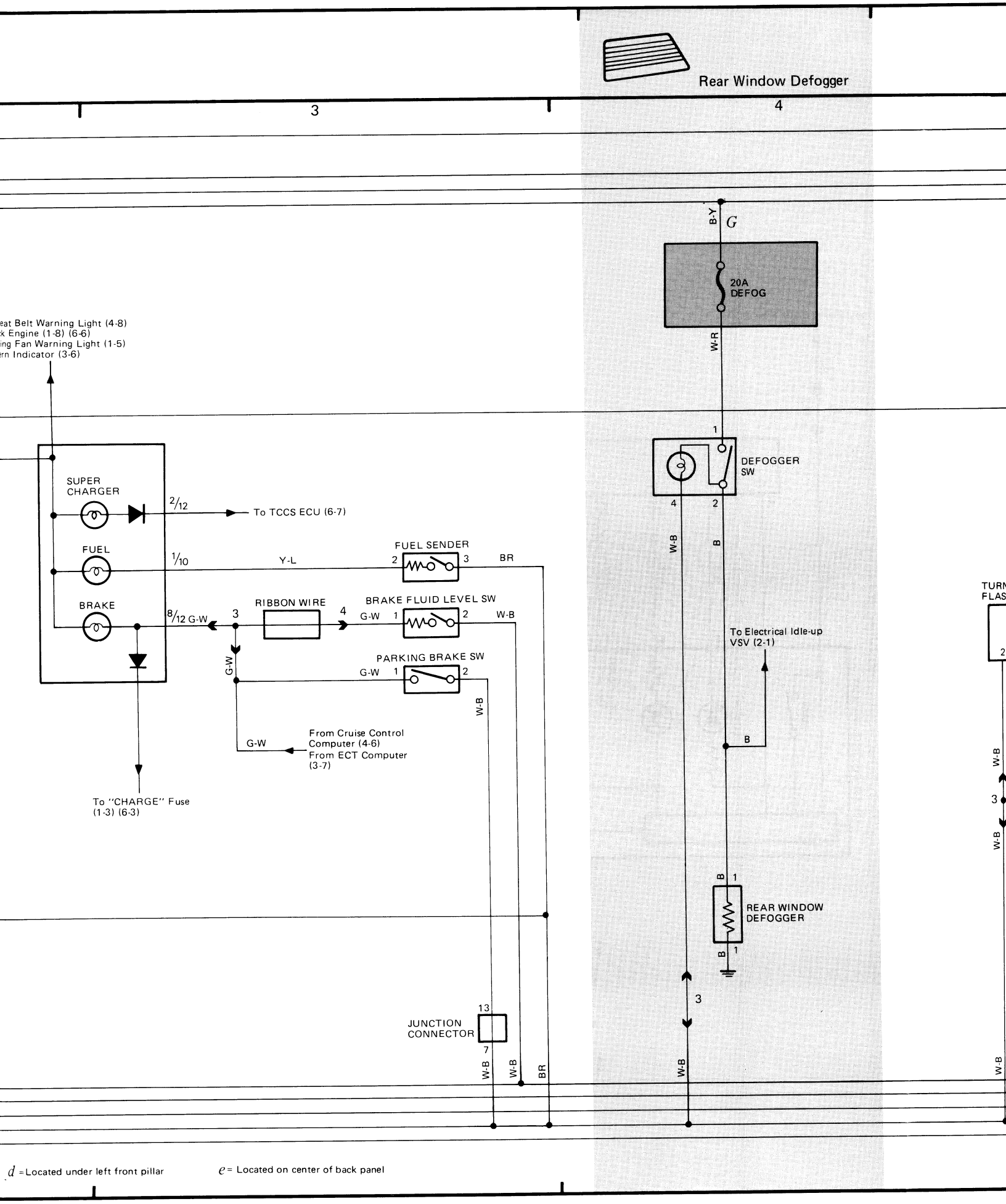

d = Located under left front pillar

e = Located on center of back panel

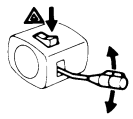

Turn Signal and Hazard

5

6

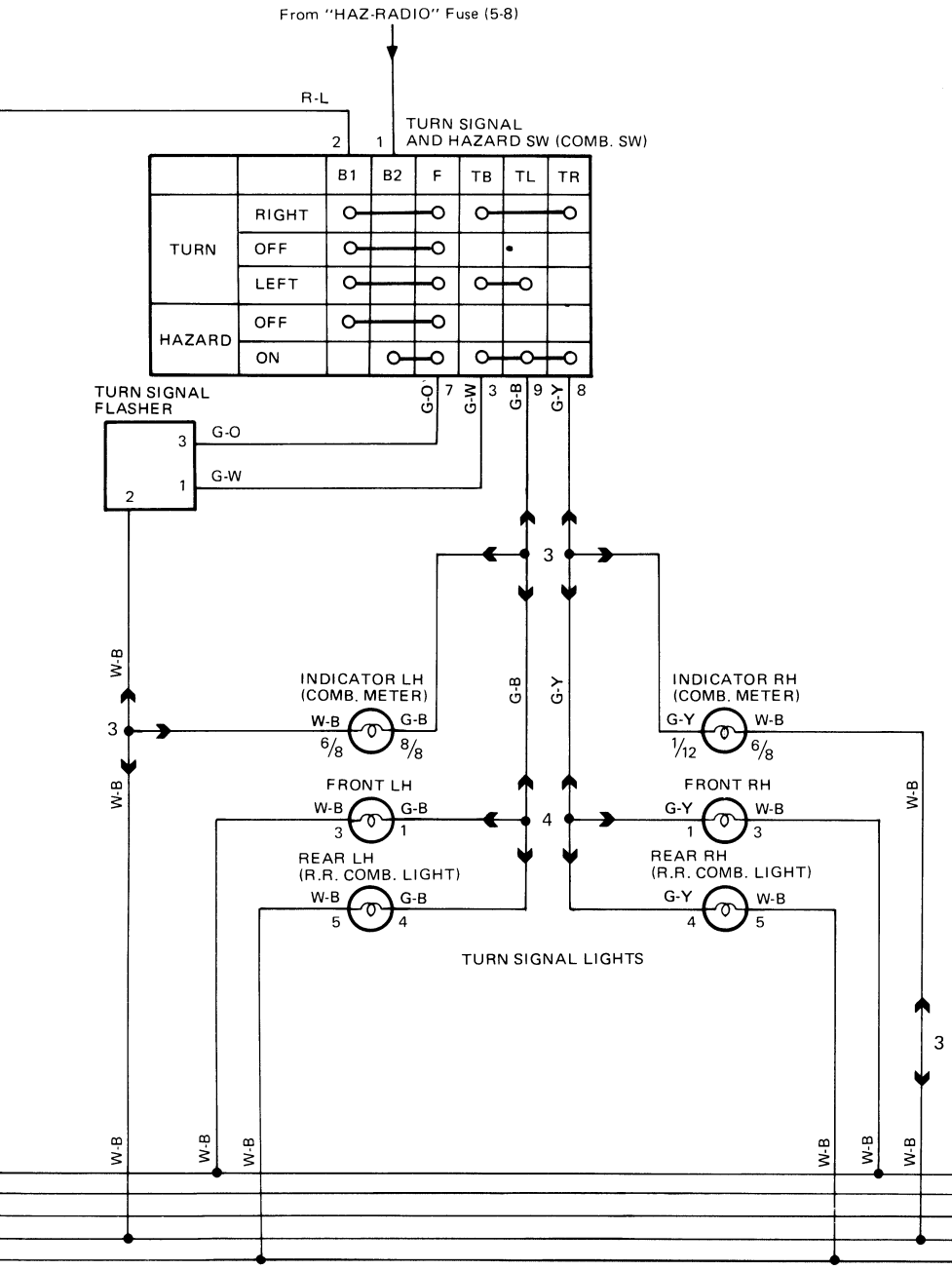

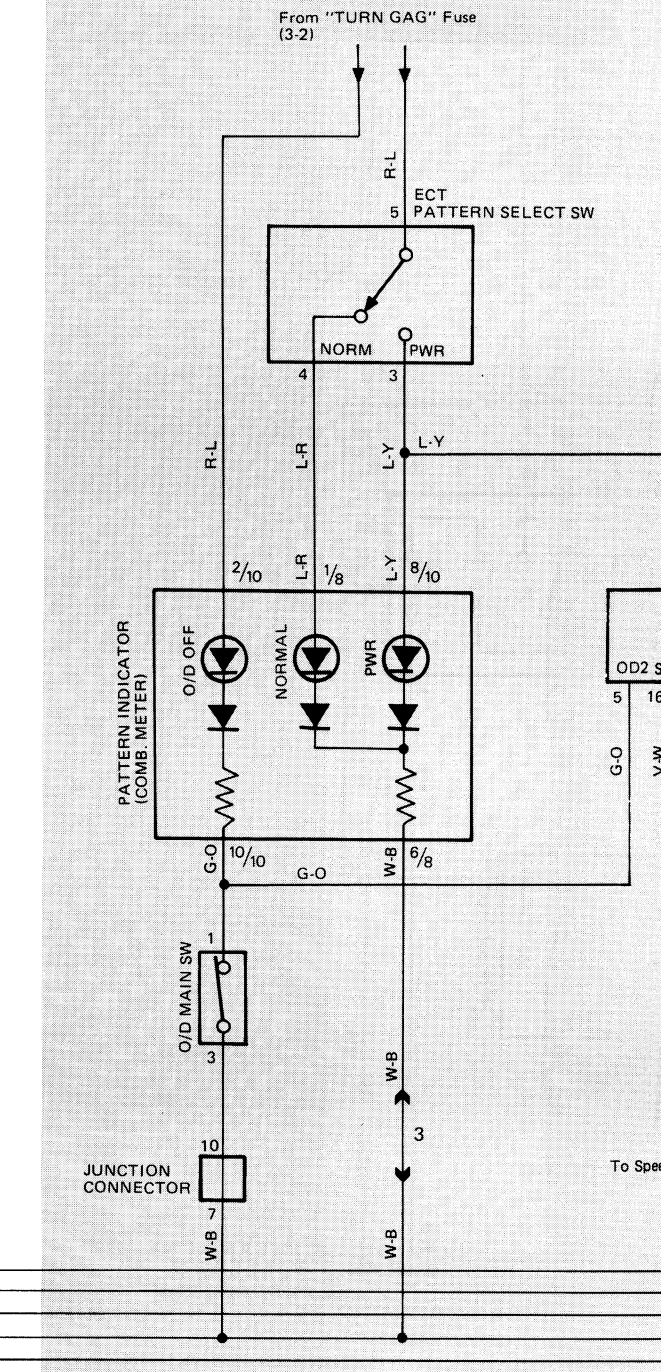

ECT

ECT

Back-up Lights

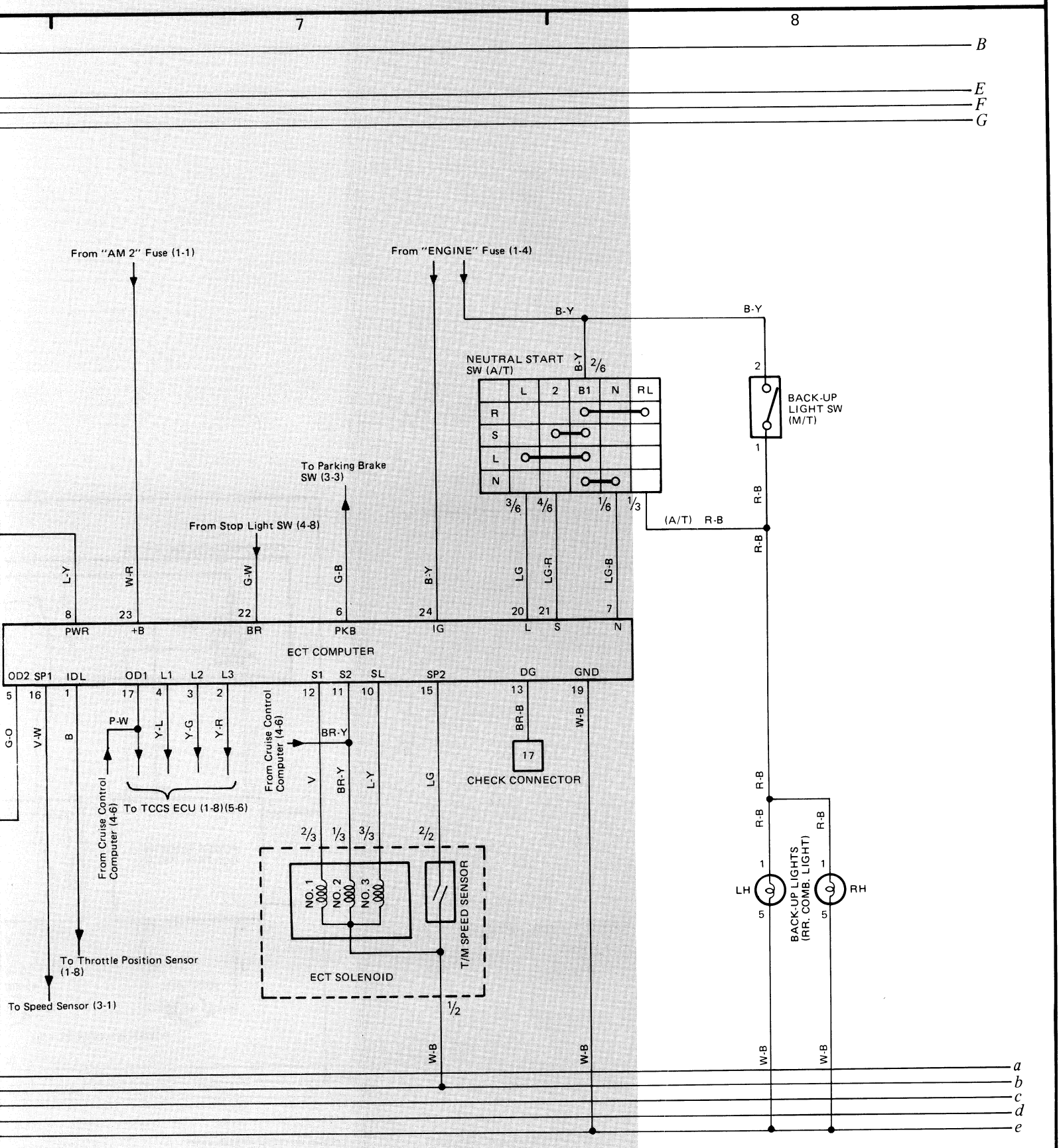

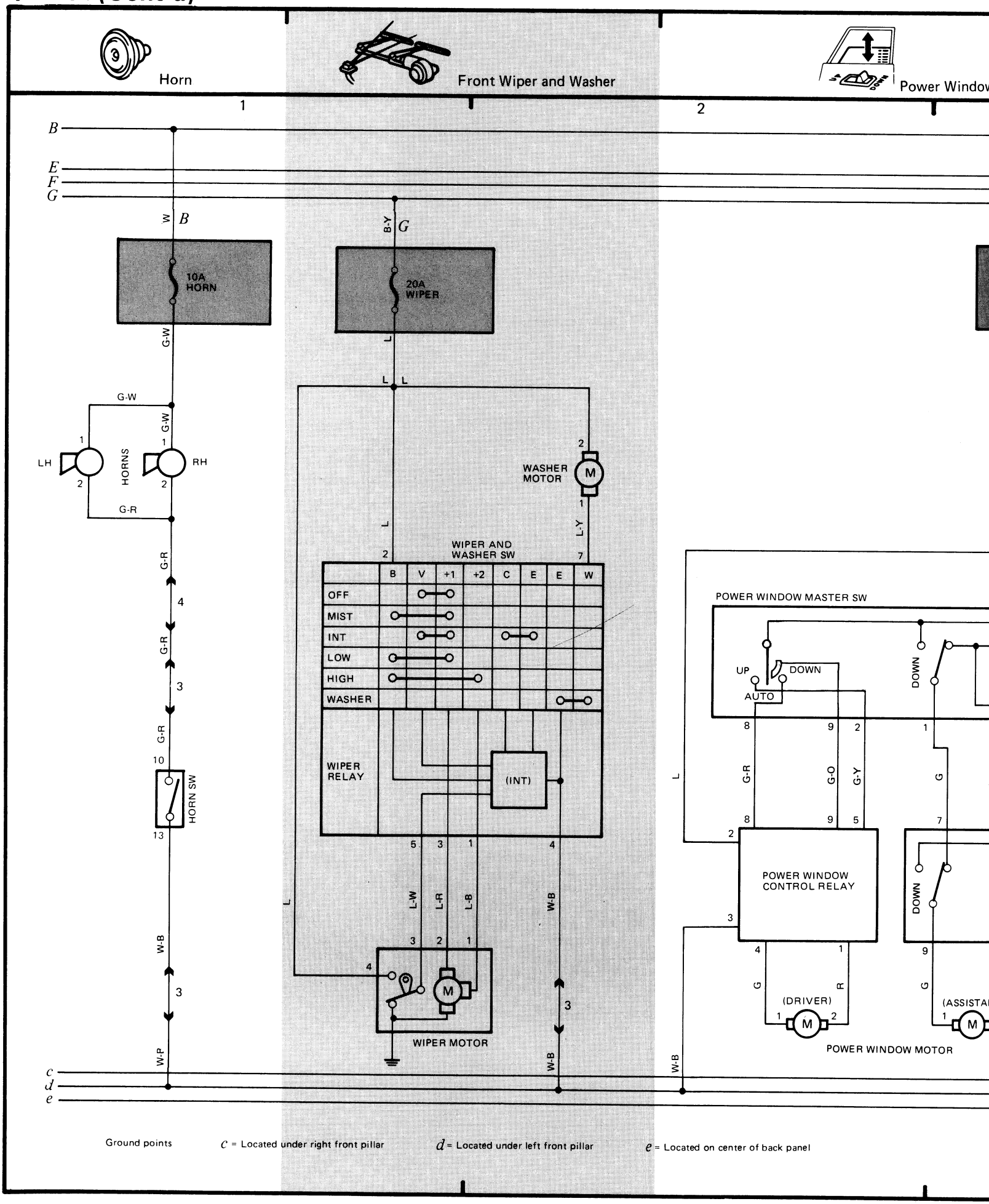

Ground points *c* = Located under right front pillar *d* = Located under left front pillar *e* = Located on center of back panel

LOCK

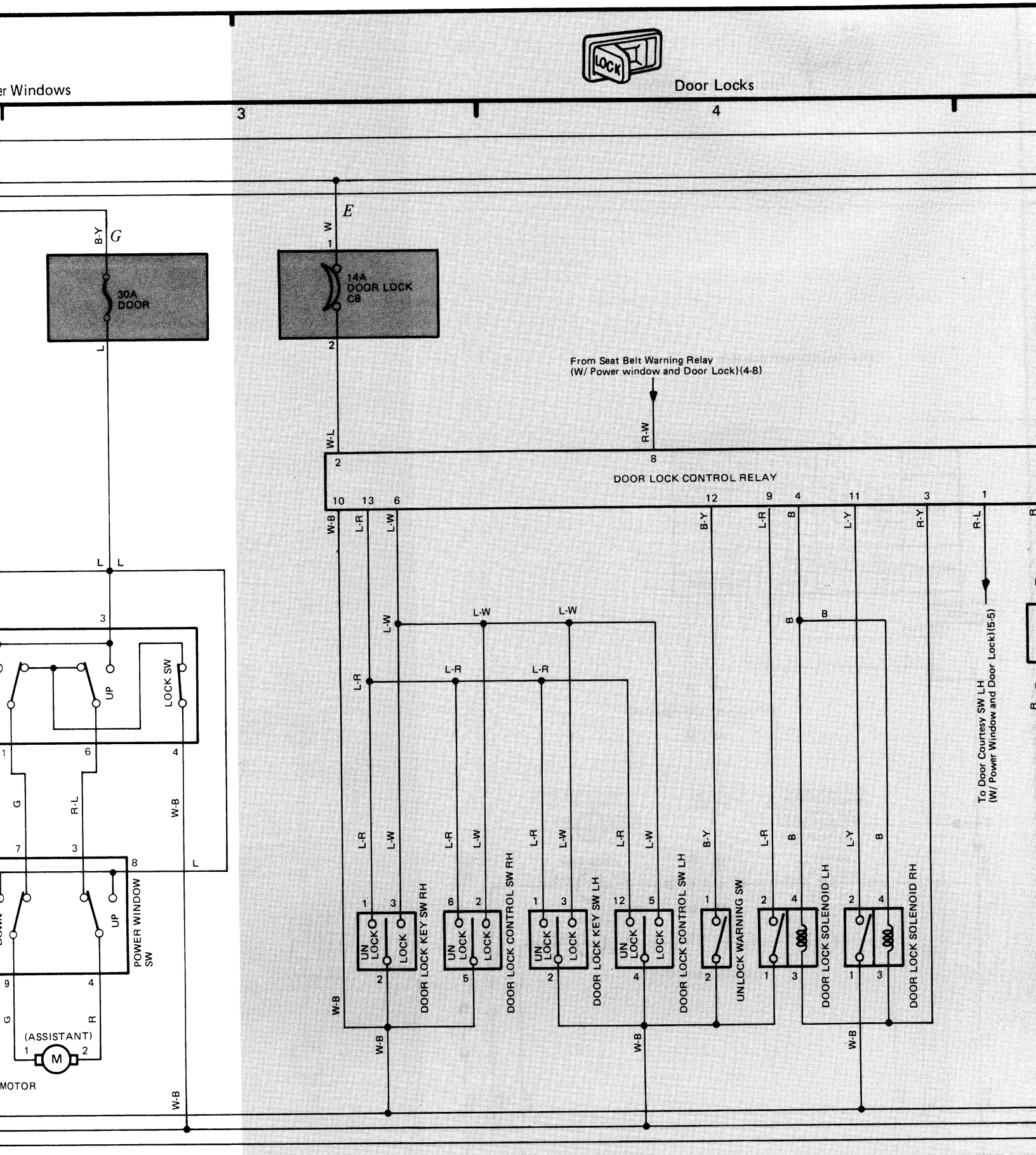
3
4
E
G
B-Y
W
1
2
30A
DOOR
14A
DOOR LOCK
CB
L
From Seat Belt Warning Relay
(W/ Power window and Door Lock)(4-8)
R-W
8
W-L
DOOR LOCK CONTROL RELAY
10
13
6
12
9
4
11
3
1
W-B
L-R
L-W
B-Y
B
L-Y
R-Y
R-L
To Door Courtesy SW LH
(W/ Power Window and Door Lock)(5-5)
UP
LOCK SW
G
R-L
POWER WINDOW
SW
(ASSISTANT)
M
MOTOR
UN
LOCK
DOOR LOCK KEY SW RH
DOOR LOCK CONTROL SW RH
DOOR LOCK KEY SW LH
DOOR LOCK CONTROL SW LH
UNLOCK WARNING SW
DOOR LOCK SOLENOID LH
DOOR LOCK SOLENOID RH

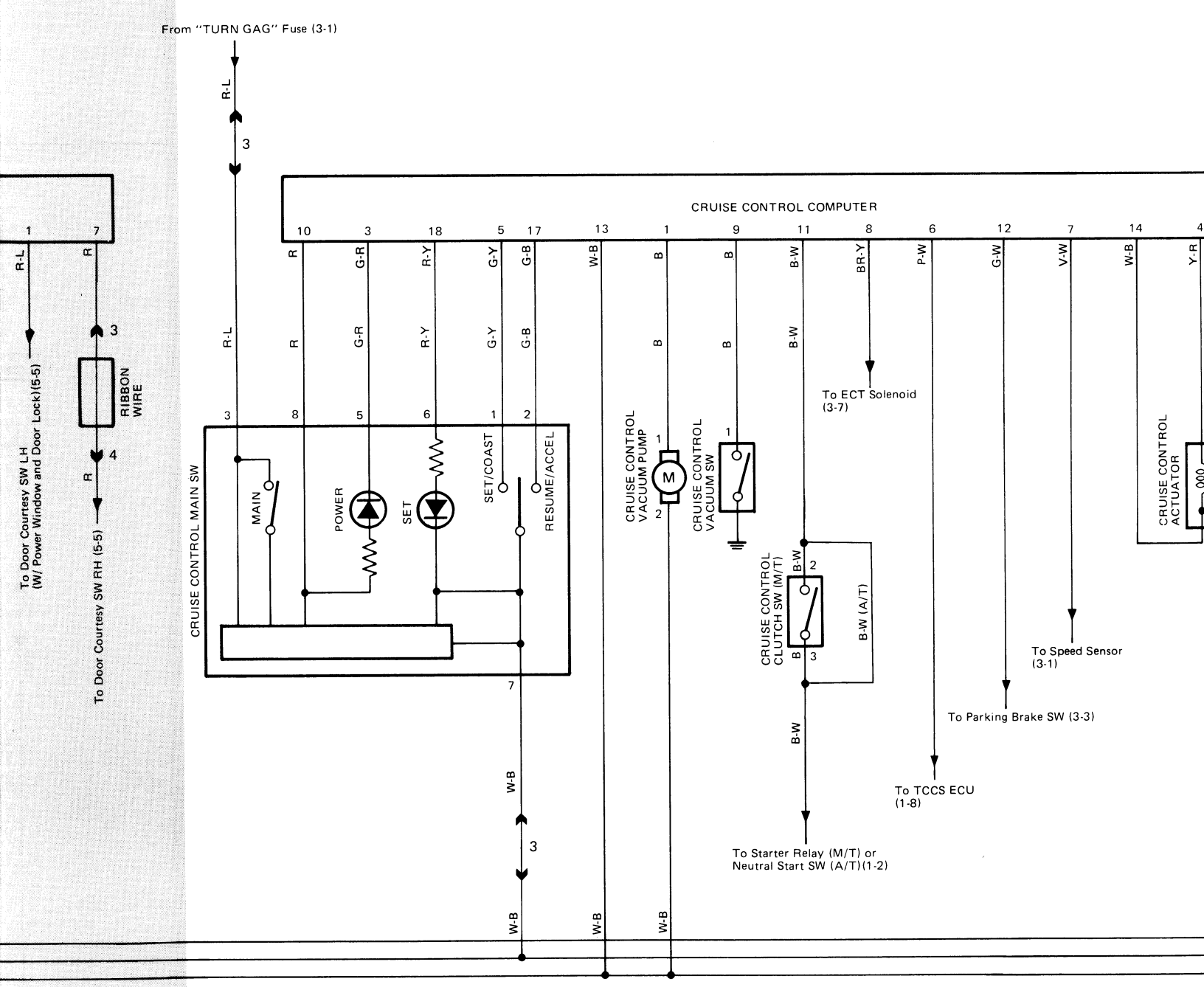
From "TURN GAG" Fuse (3-1)
R-L
3
To Door Courtesy SW LH (W/ Power Window and Door Lock)(5-5)
RIBBON WIRE
To Door Courtesy SW RH (5-5)
CRUISE CONTROL COMPUTER
CRUISE CONTROL MAIN SW
MAIN
POWER
SET
SET/COAST
RESUME/ACCEL
CRUISE CONTROL VACUUM PUMP
CRUISE CONTROL VACUUM SW
CRUISE CONTROL CLUTCH SW (M/T)
B-W (A/T)
To ECT Solenoid (3-7)
To Starter Relay (M/T) or Neutral Start SW (A/T)(1-2)
To TCCS ECU (1-8)
To Parking Brake SW (3-3)
To Speed Sensor (3-1)
CRUISE CONTROL ACTUATOR
W-B

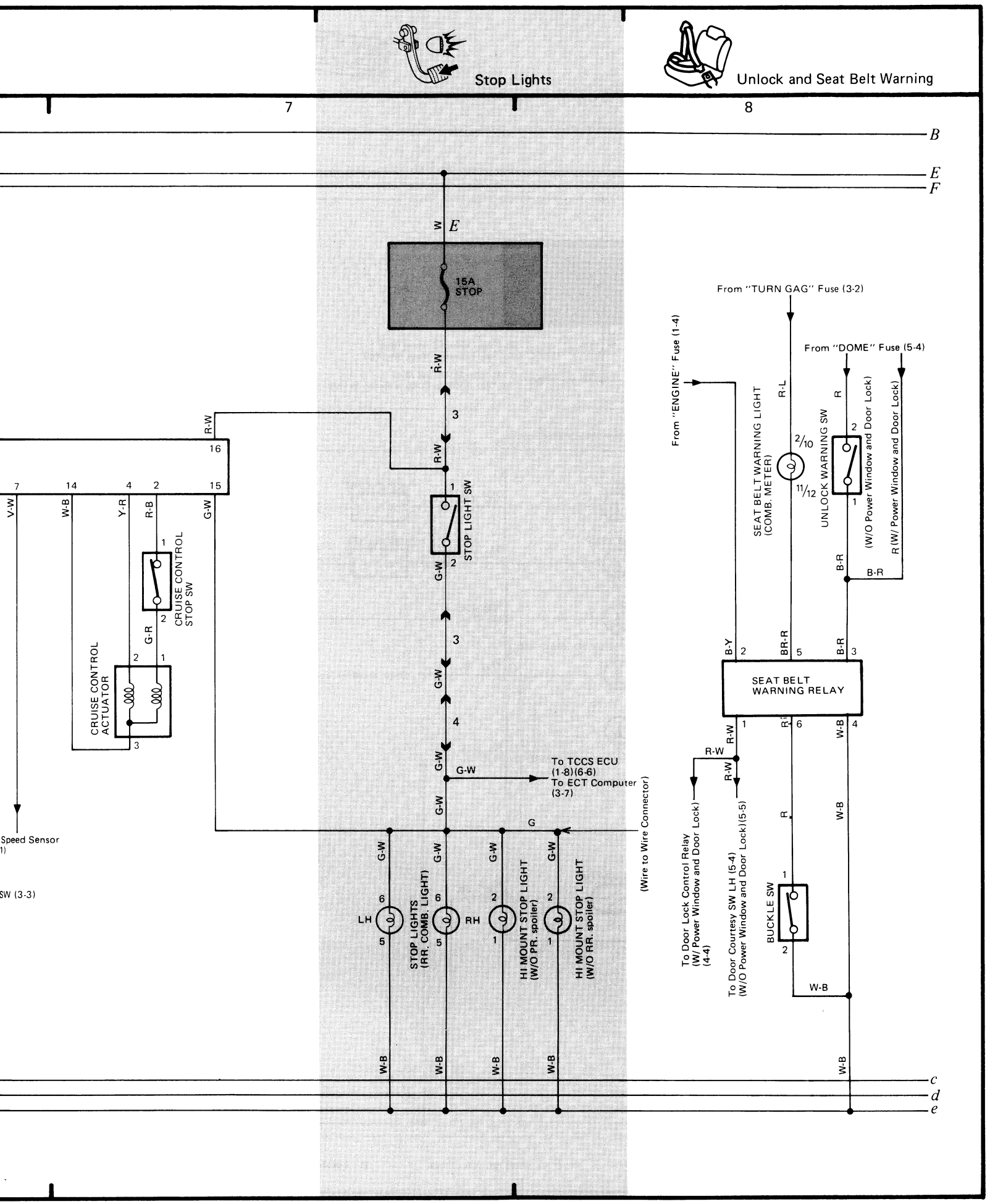
Stop Lights
Unlock and Seat Belt Warning
7
8
B
E
F
c
d
e
W
E
15A
STOP
R-W
3
R-W
16
7
14
4
2
15
V-W
W-B
Y-R
R-B
G-W
1
CRUISE CONTROL
STOP SW
2
G-R
2
1
CRUISE CONTROL
ACTUATOR
3
Speed Sensor
1)
SW (3-3)
1
STOP LIGHT SW
2
G-W
3
G-W
4
G-W
G-W
To TCCS ECU
(1-8)(6-6)
To ECT Computer
(3-7)
G-W
G
(Wire to Wire Connector)
G-W
G-W
G-W
G-W
6
LH
5
6
RH
5
2
1
2
1
STOP LIGHTS
(RR. COMB. LIGHT)
HI MOUNT STOP LIGHT
(W/O PR. spoiler)
HI MOUNT STOP LIGHT
(W/O RR. spoiler)
W-B
W-B
W-B
W-B
From "TURN GAG" Fuse (3-2)
From "ENGINE" Fuse (1-4)
From "DOME" Fuse (5-4)
R-L
R
2/10
11/12
SEAT BELT WARNING LIGHT
(COMB. METER)
UNLOCK WARNING SW
2
1
(W/O Power Window and Door Lock)
R (W/ Power Window and Door Lock)
B-R
B-R
B-Y
2
BR-R
5
B-R
3
SEAT BELT
WARNING RELAY
1
R-W
6
W-B
4
R-W
R-W
To Door Lock Control Relay
(W/ Power Window and Door Lock)
(4-4)
To Door Courtesy SW LH (5-4)
(W/O Power Window and Door Lock)(5-5)
R
W-B
1
BUCKLE SW
2
W-B
W-B

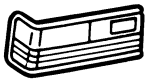

Taillights and Illumination

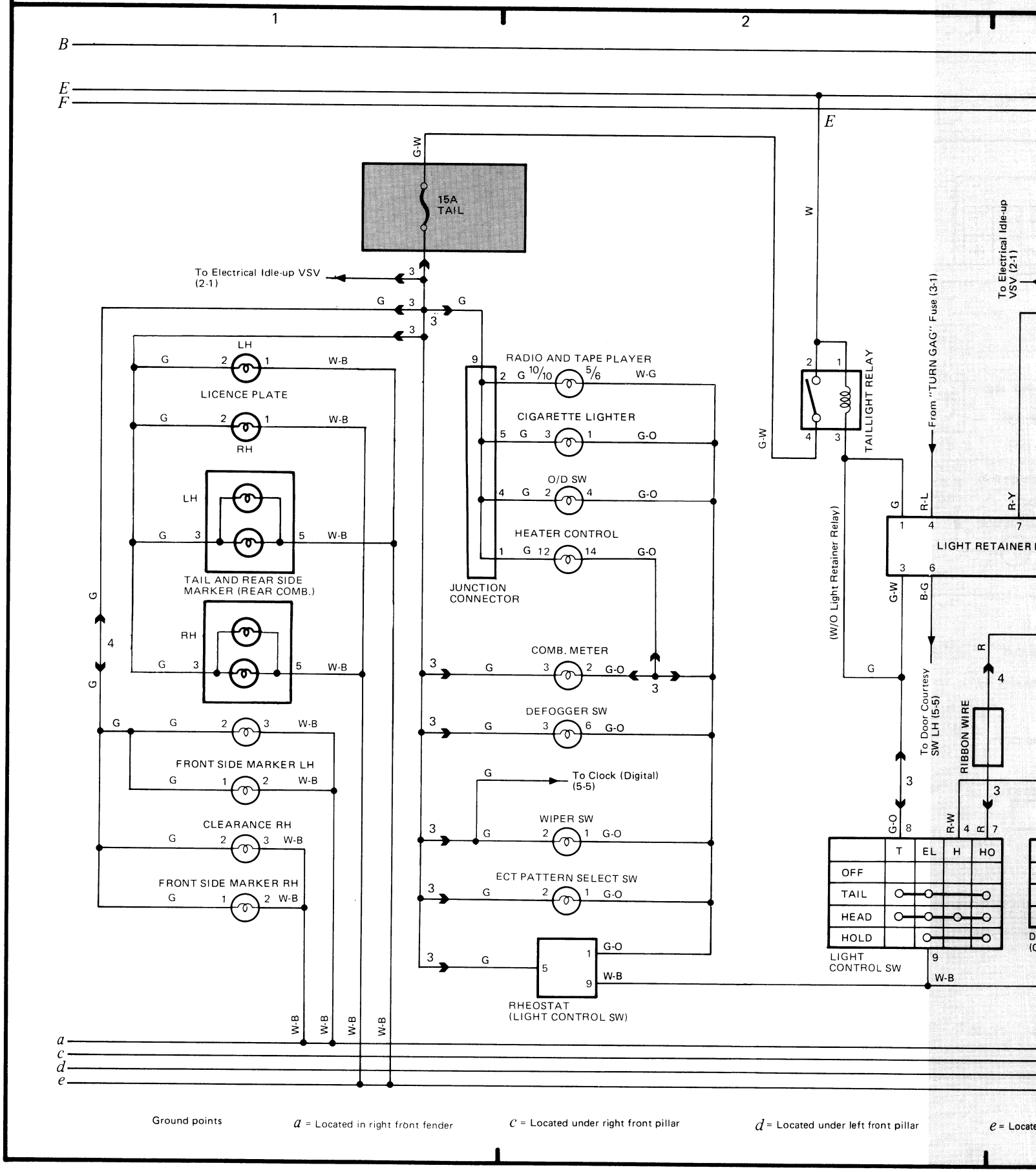

Ground points

a = Located in right front fender

c = Located under right front pillar

d = Located under left front pillar

e = Locate

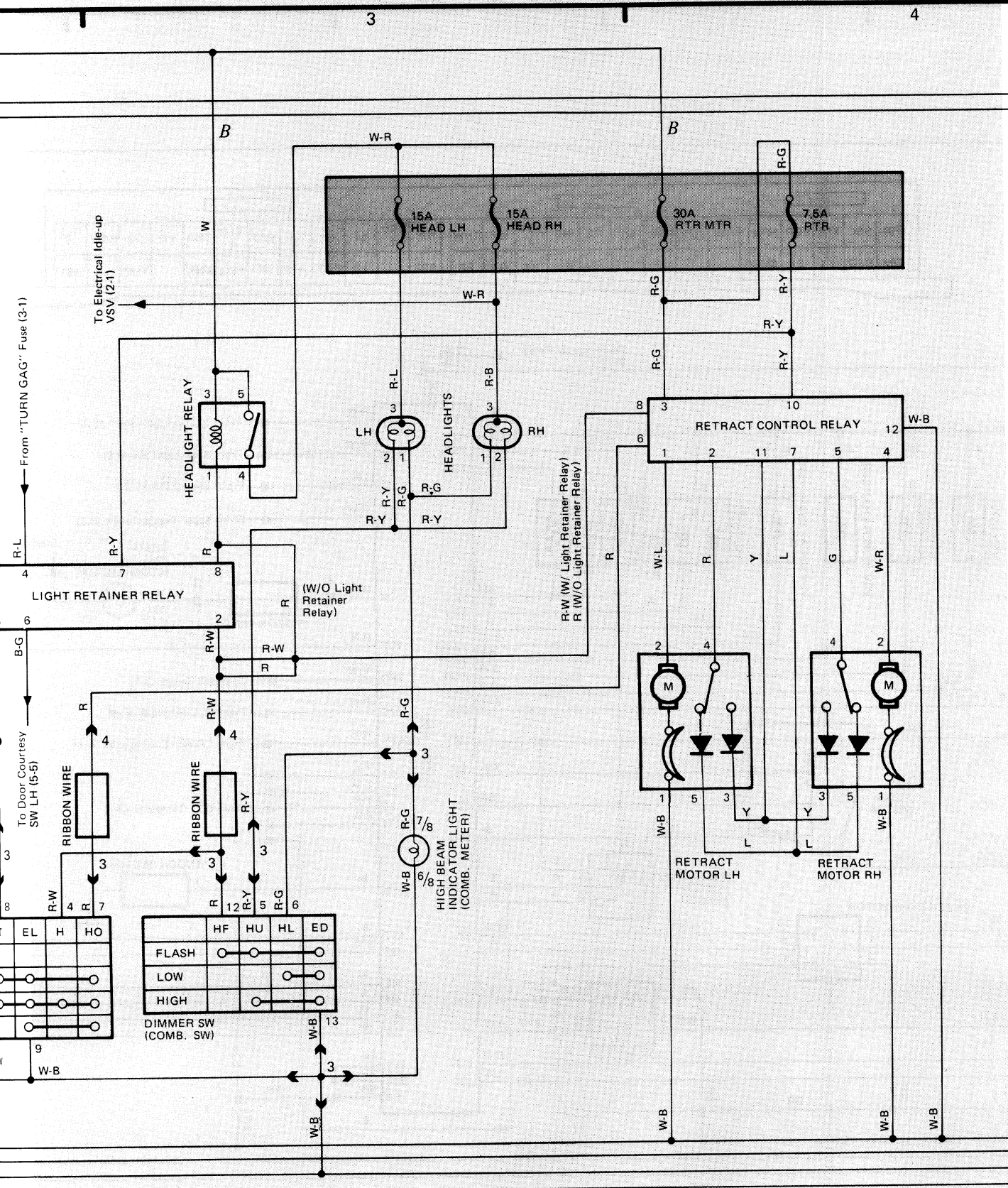

pillar

e = Located on center of back panel

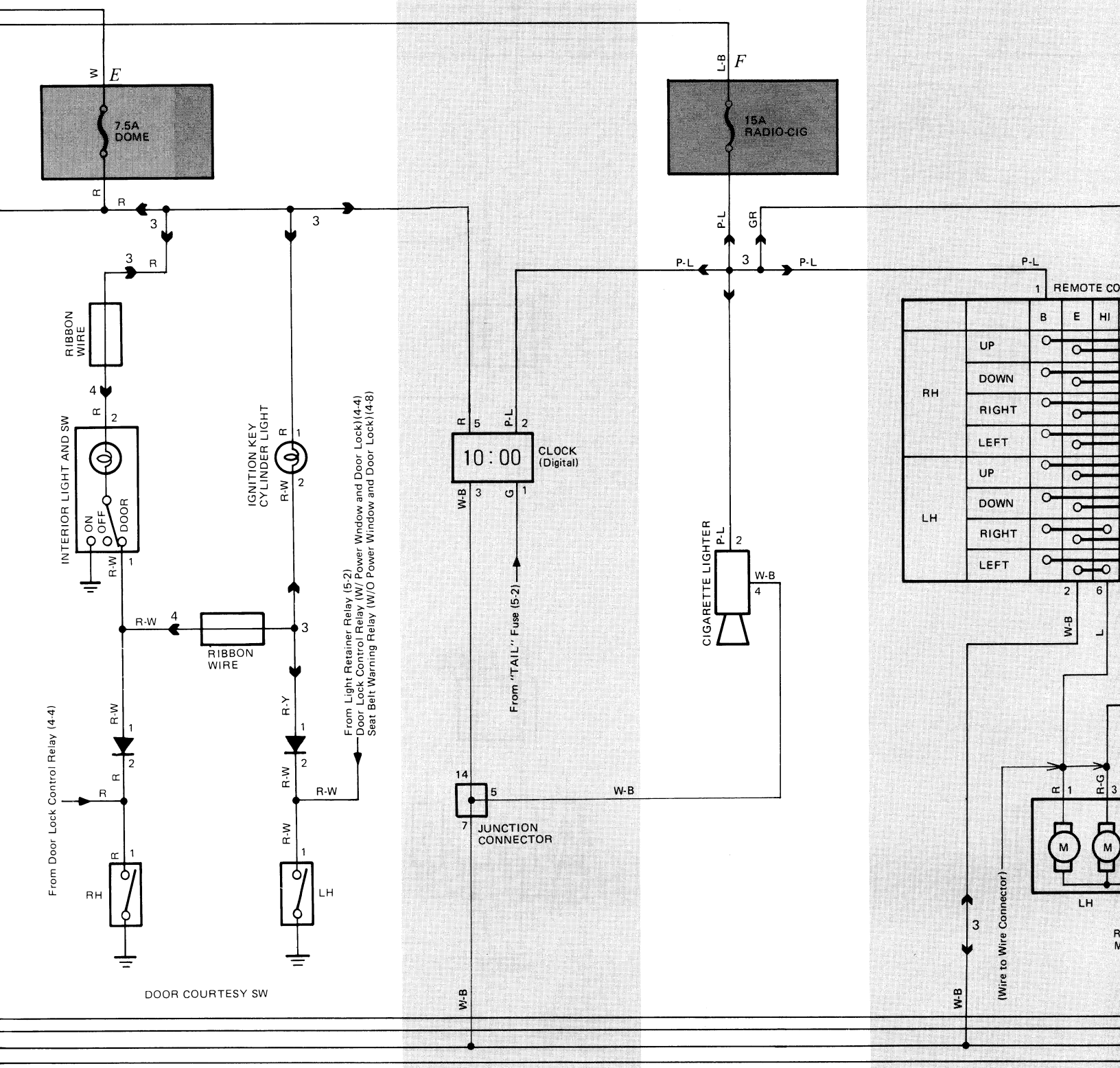
E
7.5A DOME
F
15A RADIO-CIG
RIBBON WIRE
INTERIOR LIGHT AND SW
ON
OFF
DOOR
IGNITION KEY CYLINDER LIGHT
RIBBON WIRE
From Light Retainer Relay (5-2)
Door Lock Control Relay (W/ Power Wndow and Door Lock)(4-4)
Seat Belt Warning Relay (W/O Power Window and Door Lock)(4-8)
From Door Lock Control Relay (4-4)
RH
LH
DOOR COURTESY SW
10 : 00
CLOCK (Digital)
From "TAIL" Fuse (5-2)
JUNCTION CONNECTOR
CIGARETTE LIGHTER
REMOTE CO
B
E
HI
RH
UP
DOWN
RIGHT
LEFT
LH
UP
DOWN
RIGHT
LEFT
(Wire to Wire Connector)
LH

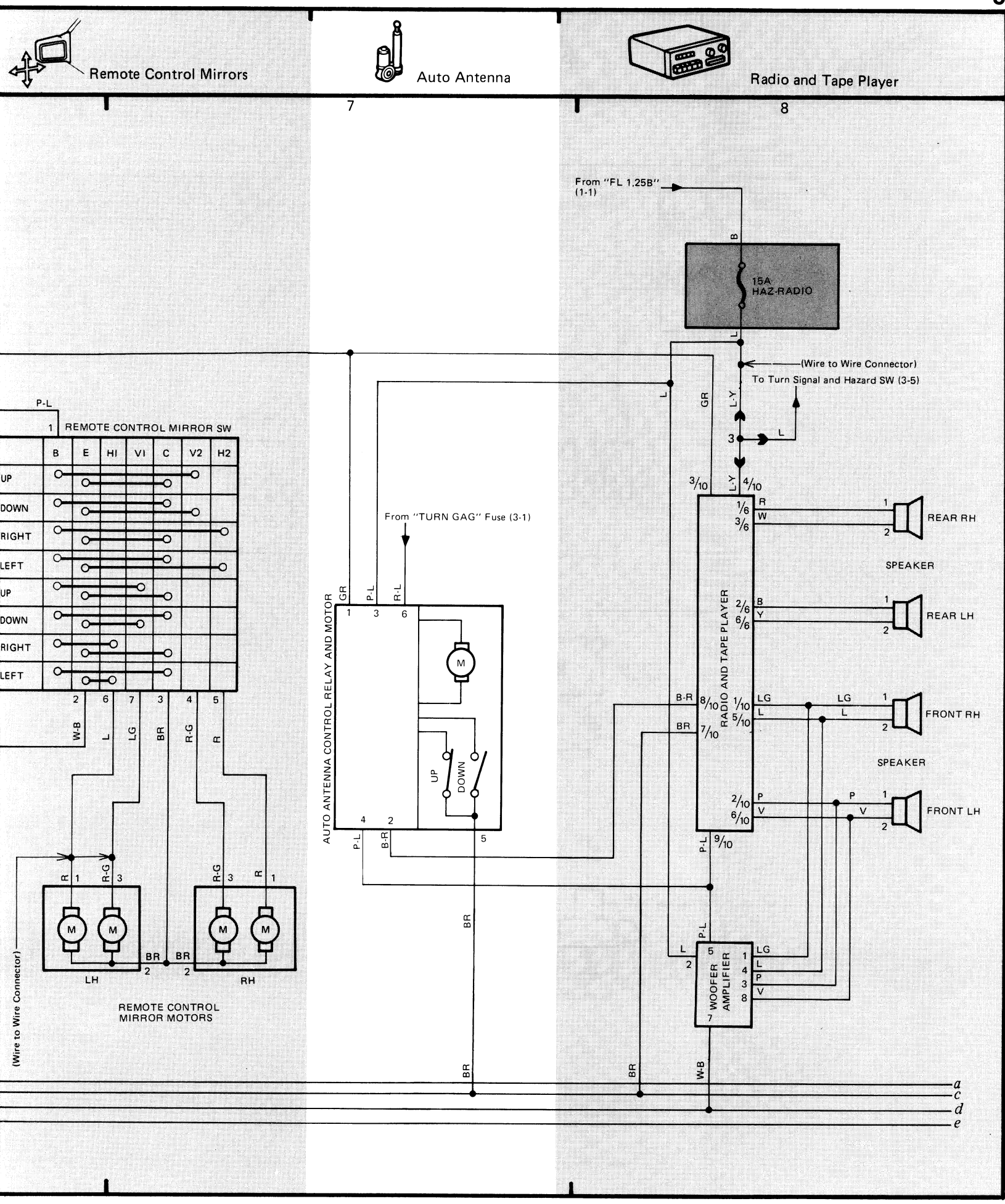
Remote Control Mirrors
Auto Antenna
Radio and Tape Player
7
8
From "FL 1.25B" (1-1)
15A HAZ-RADIO
(Wire to Wire Connector)
To Turn Signal and Hazard SW (3-5)
REMOTE CONTROL MIRROR SW
B E HI VI C V2 H2
UP
DOWN
RIGHT
LEFT
UP
DOWN
RIGHT
LEFT
From "TURN GAG" Fuse (3-1)
AUTO ANTENNA CONTROL RELAY AND MOTOR
UP
DOWN
RADIO AND TAPE PLAYER
REAR RH
SPEAKER
REAR LH
FRONT RH
SPEAKER
FRONT LH
WOOFER AMPLIFIER
LH
RH
REMOTE CONTROL MIRROR MOTORS
(Wire to Wire Connector)
a
c
d
e

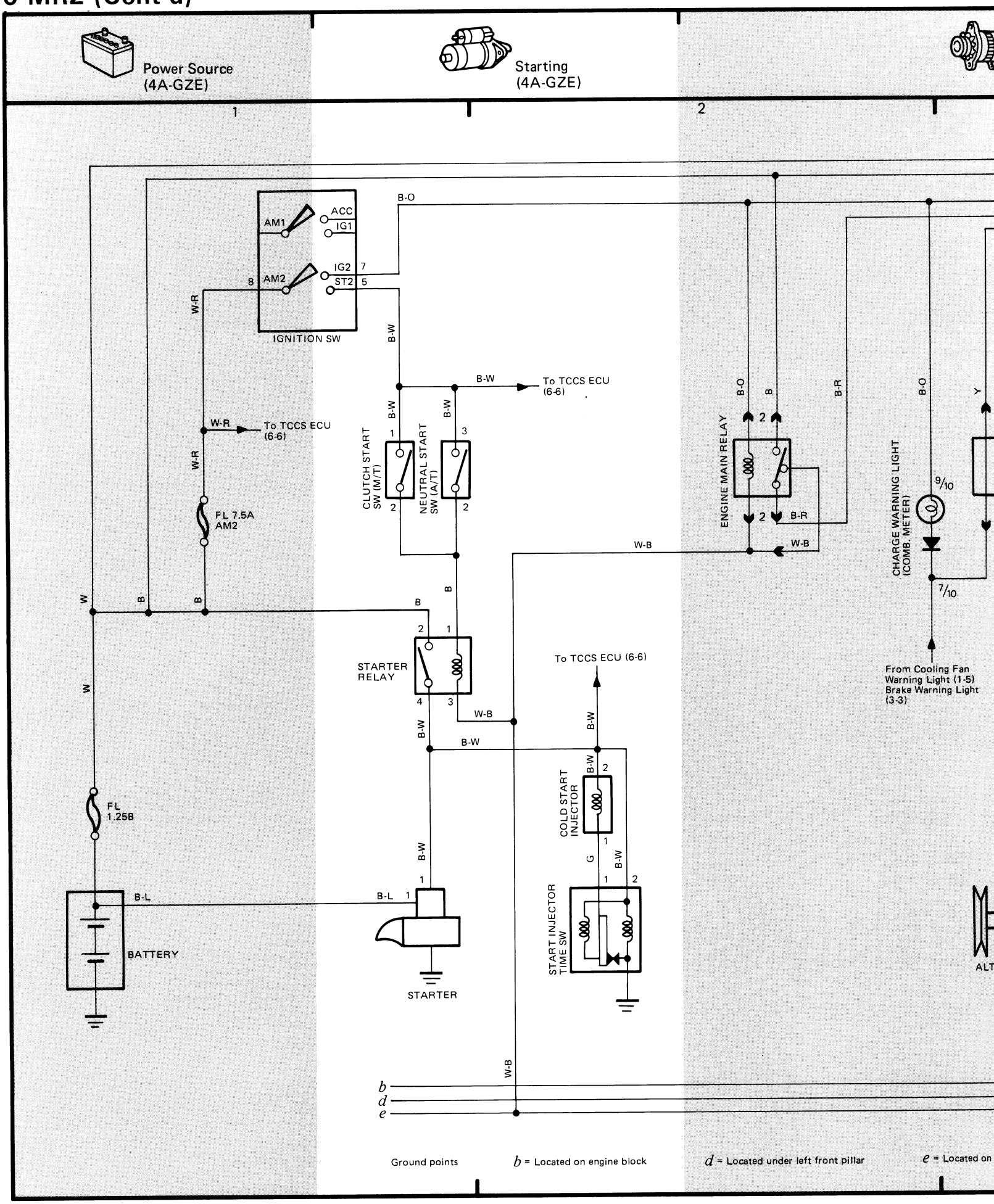
Power Source
(4A-GZE)
Starting
(4A-GZE)
1
2
AM1
ACC
IG1
IG2
ST2
AM2
IGNITION SW
B-O
W-R
B-W
To TCCS ECU
(6-6)
CLUTCH START
SW (M/T)
NEUTRAL START
SW (A/T)
FL 7.5A
AM2
ENGINE MAIN RELAY
B-R
W-B
CHARGE WARNING LIGHT
(COMB. METER)
From Cooling Fan
Warning Light (1-5)
Brake Warning Light
(3-3)
STARTER
RELAY
COLD START
INJECTOR
START INJECTOR
TIME SW
FL
1.25B
B-L
BATTERY
STARTER
ALT
b
d
e
Ground points
b = Located on engine block
d = Located under left front pillar
e = Located on

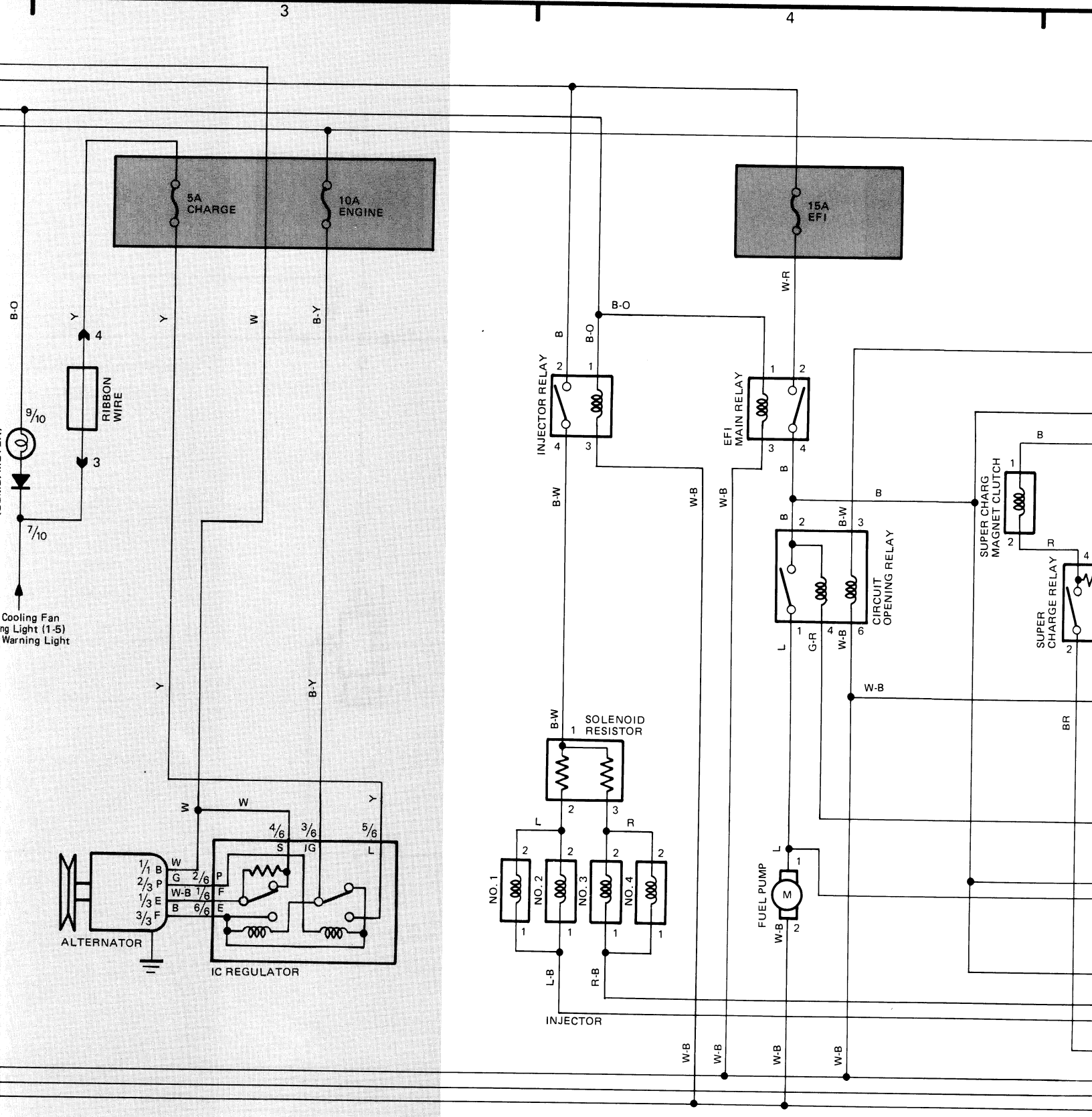

e = Located on center of back panel

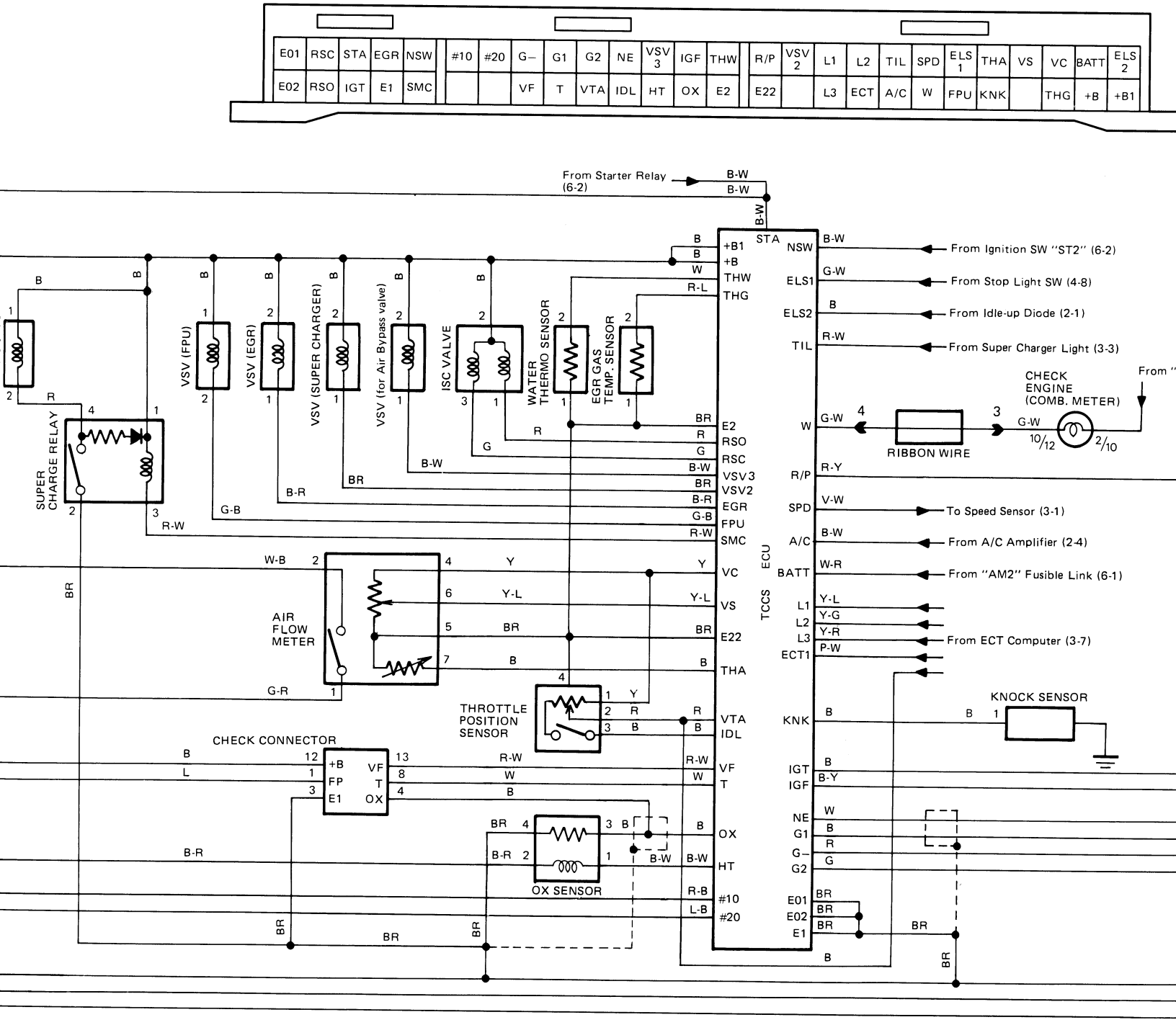
E01 RSC STA EGR NSW #10 #20 G– G1 G2 NE VSV 3 IGF THW R/P VSV 2 L1 L2 TIL SPD ELS 1 THA VS VC BATT ELS 2
E02 RSO IGT E1 SMC VF T VTA IDL HT OX E2 E22 L3 ECT A/C W FPU KNK THG +B +B1
From Starter Relay (6-2)
B-W
STA
+B1
+B
THW
THG
E2
RSO
RSC
VSV3
VSV2
EGR
FPU
SMC
VC
VS
E22
THA
VTA
IDL
VF
T
OX
HT
#10
#20
ECU
TCCS
NSW
ELS1
ELS2
TIL
W
R/P
SPD
A/C
BATT
L1
L2
L3
ECT1
KNK
IGT
IGF
NE
G1
G–
G2
E01
E02
E1
From Ignition SW "ST2" (6-2)
From Stop Light SW (4-8)
From Idle-up Diode (2-1)
From Super Charger Light (3-3)
CHECK ENGINE (COMB. METER)
From "
RIBBON WIRE
To Speed Sensor (3-1)
From A/C Amplifier (2-4)
From "AM2" Fusible Link (6-1)
From ECT Computer (3-7)
KNOCK SENSOR
VSV (FPU)
VSV (EGR)
VSV (SUPER CHARGER)
VSV (for Air Bypass valve)
ISC VALVE
WATER THERMO SENSOR
EGR GAS TEMP. SENSOR
SUPER CHARGE RELAY
AIR FLOW METER
THROTTLE POSITION SENSOR
CHECK CONNECTOR
+B
FP
E1
VF
T
OX
OX SENSOR

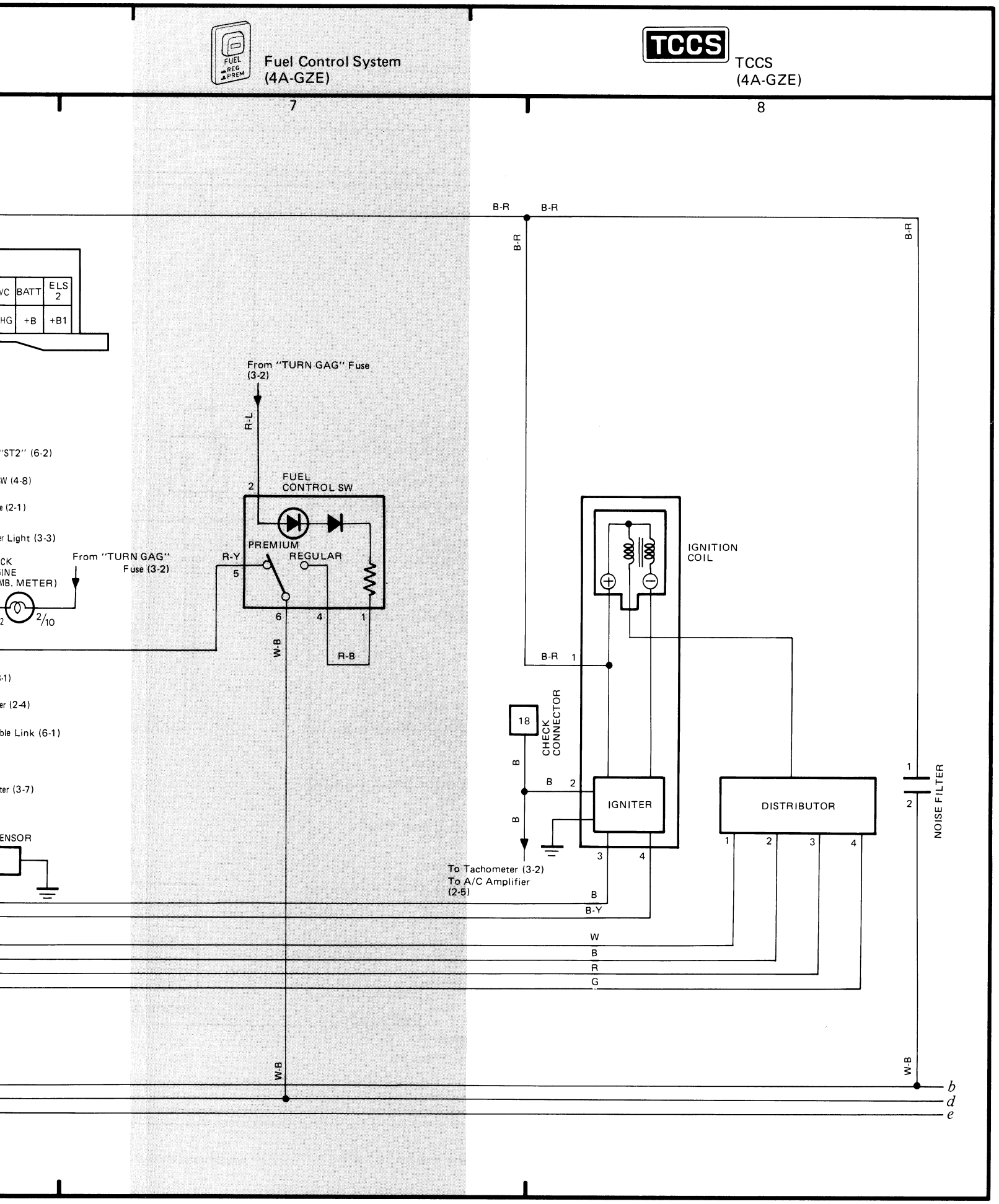
Fuel Control System
(4A-GZE)
TCCS
(4A-GZE)
7
8
VC
BATT
ELS 2
HG
+B
+B1
"ST2" (6-2)
W (4-8)
e (2-1)
er Light (3-3)
CK
INE
MB. METER)
From "TURN GAG" Fuse (3-2)
2/10
-1)
er (2-4)
ble Link (6-1)
ter (3-7)
ENSOR
From "TURN GAG" Fuse (3-2)
R-L
FUEL CONTROL SW
PREMIUM
REGULAR
R-Y
R-B
W-B
B-R
IGNITION COIL
CHECK CONNECTOR
18
IGNITER
DISTRIBUTOR
NOISE FILTER
To Tachometer (3-2)
To A/C Amplifier (2-5)
B
B-Y
W
G
b
d
e